ISDN S-INTERFACE LOW PROFILE DUAL SMT TRANSFORMERS

Pulse
A TECHNITROL COMPANY

RoHS COMPLIANT

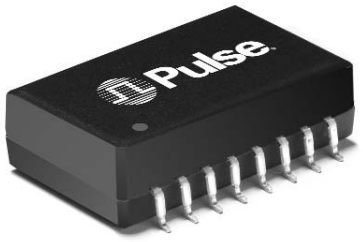

- Meets pulse waveform template of CCITT I.430 when recommended transformer and chip pair are used
- Excellent longitudinal balance
- 2KVrms isolation voltage
- Available in tape and reel, or tube packaging
- 235°C peak solder reflow temperature rating
- UL recognized

Electrical Specifications @ 25°C — Operating Temperature 0°C to 70°C

RoHS-5 Part No.	RoHS-6 Part No.	Ratio [A] (±2%)		OCL Pri (mH MIN)	L_L Sec (µH MAX)		$C_{W/W}$ (pF MAX)	CD Pri [B] (pF MAX)		DCR Pri (Ω ±25%)		DCR Sec (Ω ±25%)		Δ I_{DC} [C] (mA MAX)
		A	B	A & B	A	B	A & B	A	B	A	B	A	B	
T5005	T5005NL	1:2.5	1:2.5	22	40	40	100	110	110	2.4	2.4	5.3	5.3	1
T5006	T5006NL	1:2	1:2	22	11	11	100	180	180	2.4	2.4	4.4	4.4	1
T5007	T5007NL	1:2	1:2	22	5	5	100	80	80	2.4	2.4	4.2	4.2	1
T5008	T5008NL	1:1	1:1	22	5	5	100	42	42	2.4	2.4	2.4	2.4	1
T5010	T5010NL	1:1.8	1:1.8	22	15	15	100	160	160	2.4	2.4	3.8	3.8	1

U.S. Patent No. 5,015,981

Mechanical

Schematic

TSJ

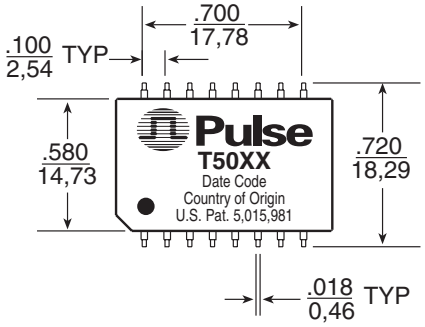

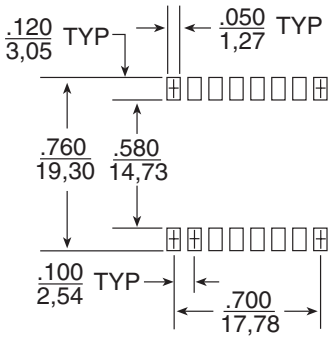

SUGGESTED PAD LAYOUT

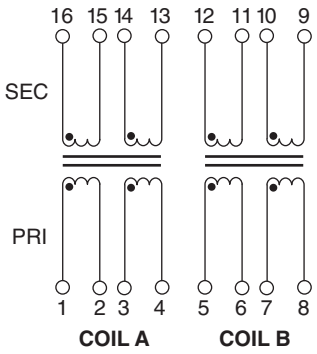

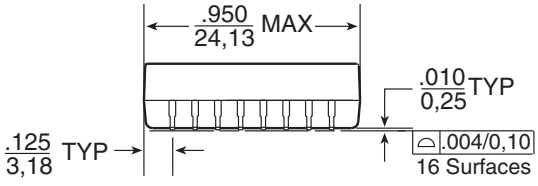

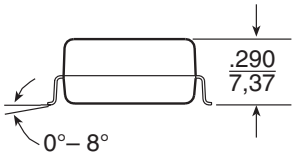

Dimensions: Inches / mm

Unless otherwise specified all tolerances are ±.010 / 0,25

(See other side for packaging information)

ISDN S-INTERFACE LOW PROFILE DUAL SMT TRANSFORMERS

IC Manufacturer	IC Part Number	Dual Surface Mount
		Trans & Rec
AMD	Am 79C30A/79C32A	T5006
AT&T/Lucent	T7250/7256/7259 T7903	T5005 T5007
Mietec	MTC-2072	T5007
Mitel	MT8930	T5007
Motorola	MC145474/145475 MC145574	T5008 T5005
National [D]	TP3420/3421	T5007
SGS Thomson	ST5420, ST5421	T5007
Siemens	PEB 2080/2081/2085 PSB 2186 PEB 2084/2086	T5007
Yamaha	7405B, YTD421	T5007
Intel	29C53	T5010

Notes

A. A center tapped winding can be created by connecting two ends of a split center winding together on the printed circuit board. In ISDN-S applications, the primary winding is the line side transformer winding.

B. Minimum primary inductance and maximum distributed capacitance satisfy the transmitter output and receiver input impedance requirements of CCITT I.430 for both the TE and the NT. The maximum distributed capacitance allows sufficient margin for the capacitance of the IC and a protection diode network. It is consistent with the overall maximum value specified and the permitted length of the basic access TE cord.

C. The maximum specified unbalanced DC current capability is based on 20 mH minimum primary OCL.

D. National recommends a 1:2 receive transformer, but used as a 1:1 ratio by connecting only half the secondary winding.

E. Standard packaging for all transformers on this data sheet is anti-static tubes. Optional Tape & Reel packaging can be ordered by adding a "**T**" suffix, (i.e: T5005NL**T**).

Packaging Information

Type	Part Weight	Parts/Tube	Parts/Tray [E]	Parts/Reel [E]	Reel Diameter	Tape Width	Pitch
SMT	7 grams	20	50	200	13 inches	44 mm	24 mm

Application Notes

1. **General Information** – The S-interface is the standardized four-wire digital telephone access point defined by the CCITT I-series recommendations for the Integrated Services Digital Network. This “basic rate access” accommodates two 64Kbps “B-channels” for information, one 16Kbps “D-channel” intended for signaling and control, and 48Kbps for framing and other purposes, giving a total rate of 192Kbps. The CCITT physical layer recommends that the user network interface be transformer coupled.

   The transformer provides isolation for the line card or the terminal from the line. It is also a way to provide phantom power feeding to the terminal over the S-loop. Each end requires a transmit and a receive transformer. Chokes are used in some applications to reduce common mode noise.

   The transformers described in this data sheet are matched to the transceivers offered by the major IC manufacturers listed. The use of a transformer-chip pair assures that all requirements of CCITT I.430 are met with respect to pulse waveform templates, impedance and longitudinal balance. In addition, the transformers provide the isolation voltages required by the regulatory agencies and are capable of passing surge voltage tests.

2. **Safety Standards Recognition** – All transformers listed in this data sheet are recognized to UL 1459 and UL 1950 as a basic insulation barrier.

3. **Flammability** – Materials used in the products are recognized UL94-VO. Products meet the requirements of IEC 695-2-2 (needle flame test).

4. For more application notes please refer to data sheet **T604**.

Common Mode Chokes

Please refer to data sheet **G002** for selection of low and high frequency common mode chokes.

For More Information:

Pulse Worldwide Headquarters
12220 World Trade Dr.
San Diego, CA 92128
U.S.A.
www.pulseeng.com
Tel: 858 674 8100
Fax: 858 674 8262

Pulse Europe
Einsteinstrasse 1
D-71083 Herrenberg
Germany
Tel: 49 7032 7806 0
Fax: 49 7032 7806 12

Pulse China Headquarters
B402, Shenzhen
Tech-Innovation International
Tenth Kejinan Rd.
High-Tech Industrial Park
Nanshan District, Shenzhen
China
Tel: 86 755 33966678
Fax: 86 755 33966700

Pulse North China
Room 1503
XinYin Building
No. 888 YiShan Rd.
Shanghai 200233
China
Tel: 86 21 54643211/2
Fax: 86 21 54643210

Pulse South Asia
150 Kampong Ampat
#07-01/02
KA Centre
Singapore 368324
Tel: 65 6287 8998
Fax: 65 6280 0080

Pulse North Asia
No. 26
Kao Ching Rd.
Yang Mei Chen
Tao Yuan Hsien
Taiwan, R. O. C.
Tel: 886 3 4641811
Fax: 886 3 4641911

Performance warranty of products offered on this data sheet is limited to the parameters specified. Data is subject to change without notice. Other brand and product names mentioned herein may be trademarks or registered trademarks of their respective owners. © Copyright, 2007. Pulse Engineering, Inc. All rights reserved.