PulseLARSEN Antennas

TECHNICAL DATA SHEET

Description: Low loss Mini Coax Jumper Cable

Series: Cable Assembly

PART NUMBER: W90XX



Features:

- Low Loss mini coax cable
- OD 1.13mm
- Various cable lengths and connector types, refer to page 2.
- RoHS compliant

Applications:

- SMA to U.FL jumper cable
- RF connections for radios and antennas
- Connection from radio to external antennas

All dimensions are in mm / inches

Issue: 1717

RoHS COMPLIANT

In the effort to improve our products, we reserve the right to make changes judged to be necessary.
CONFIDENTIAL AND PROPRIETARY INFORMATION
This document contains confidential and proprietary information of Pulse Electronics, Inc. (Pulse) and is protected by copyright, trade secret and other state and federal laws. Its receipt or possession does not convey any rights to reproduce, disclose its contents, or to manufacture, use or sell anything it may describe. Reproduction, disclosure or use without specific written authorization of Pulse is strictly forbidden.

For more information:

Pulse Worldwide Headquarters
15255 Innovation Drive #100
San Diego, CA 92128
USA
Tel:1-858-674-8100

Pulse/Larsen Antennas
18110 SE 34th St Bldg 2 Suite 250
Vancouver, WA 98683
USA
Tel: 1-360-944-7551

Europe Headquarters
Pulse GmbH & Do, KG
Zeppelinstrasse 15
Herrenberg, Germany
Tel: 49 7032 7806 0

Pulse (Suzhou) Wireless Products Co, Inc.
99 Huo Ju Road(#29 Bldg,4th Phase
Suzhou New District
Jiangsu Province, Suzhou 215009 PR China
Tel: 86 512 6807 9998

PulseLARSEN Antennas

TECHNICAL DATA SHEET

Description: Low loss Mini Coax Jumper Cable

Series: Cable Assembly

PART NUMBER: W90XX

CABLE ASSEMBLY FOR WIRELESS APPLICATION

Part Number	VSWR 2.4GHz/6GHz	Insertion Loss 2.4GHz/6GHz	Cable Length (in/mm)	Connector Types
W9003	1.3/1.6	-0.6dB/-1.4dB	3/76	RP-SMA Female to U.FL
W9003M	1.3/1.6	-0.6dB/-1.4dB	3/76	SMA Female to U.FL
W9006	1.3/1.6	-0.8dB/-1.7dB	6/150	RP-SMA Female to U.FL
W9006M	1.3/1.6	-0.8dB/-1.7dB	6/150	SMA Female to U.FL
W9009C	1.3/1.6	-1.0dB/-1.9dB	9/229	RP-SMA Female to U.FL
W9009M	1.3/1.6	-1.0dB/-1.9dB	9/229	SMA Female to U.FL
W9011	1.3/1.6	-1.3dB/-2.6dB	11/280	RP-SMA Female to U.FL
W9011M	1.3/1.6	-1.3dB/-2.6dB	11/280	SMA Female to U.FL
W9015	1.3/1.6	-1.4dB/-2.8dB	15/381	RP-SMA Female to U.FL
W9015M	1.3/1.6	-1.4dB/-2.8dB	15/381	SMA Female to U.FL
W9020	1.3/1.6	-1.6dB/-3.2dB	20/508	RP-SMA Female to U.FL
W9020M	1.3/1.6	-1.6dB/-3.2dB	20/508	SMA Female to U.FL

In the effort to improve our products, we reserve the right to make changes judged to be necessary.
CONFIDENTIAL AND PROPRIETARY INFORMATION
This document contains confidential and proprietary information of Pulse Electronics, Inc. (Pulse) and is protected by copyright, trade secret and other state and federal laws. Its receipt or possession does not convey any rights to reproduce, disclose its contents, or to manufacture, use or sell anything it may describe. Reproduction, disclosure or use witho ten authorization of Pulse is strictly forbidden.

RoHS COMPLIANT

Description: Low loss Mini Coax Jumper Cable

Series: Cable Assembly

PART NUMBER: W90XX

ENVIRONMENTAL SPECIFICATIONS

Operating Temperature	-40-+85° C
Storage Temperature	-40-+85° C
RoHS Compliant	Yes

In the effort to improve our products, we reserve the right to make changes judged to be necessary.
CONFIDENTIAL AND PROPRIETARY INFORMATION
This document contains confidential and proprietary information of Pulse Electronics, Inc. (Pulse) and is protected by copyright, trade secret and other state and federal laws. Its receipt or possession does not convey any rights to reproduce, disclose its contents, or to manufacture, use or sell anything it may describe. Reproduction, disclosure or use witho ten authorization of Pulse is strictly forbidden.

RoHS COMPLIANT

PulseLARSEN Antennas

TECHNICAL DATA SHEET

Description: Low loss Mini Coax Jumper Cable

Series: Cable Assembly

PART NUMBER: W90XX

MECHANICAL DRAWING

Mechanical Dimensions

W90xx

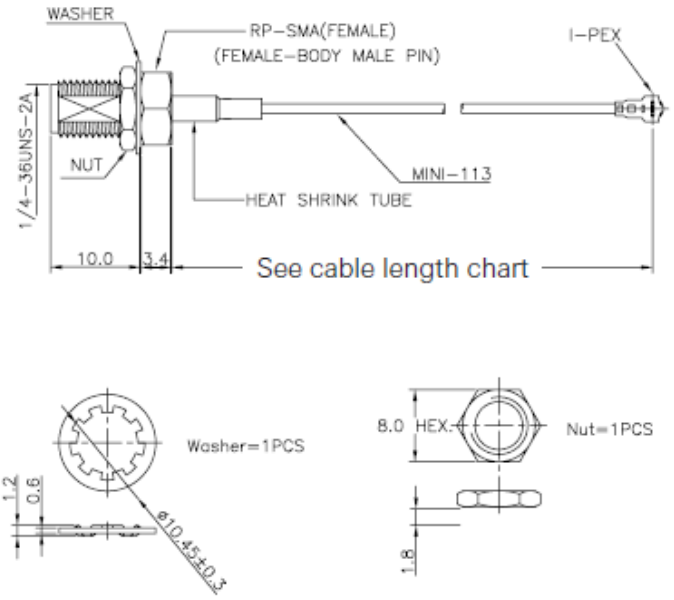

W90xxM

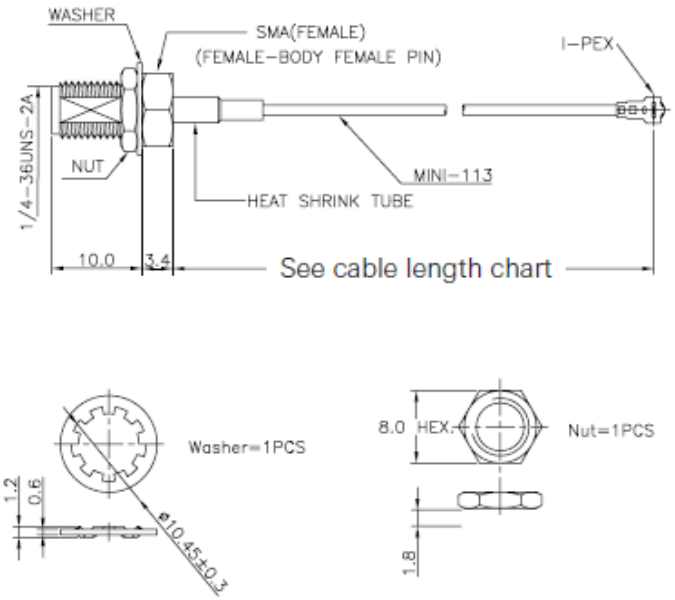

In the effort to improve our products, we reserve the right to make changes judged to be necessary.
CONFIDENTIAL AND PROPRIETARY INFORMATION
This document contains confidential and proprietary information of Pulse Electronics, Inc. (Pulse) and is protected by copyright, trade secret and other state and federal laws. Its receipt or possession does not convey any rights to reproduce, disclose its contents, or to manufacture, use or sell anything it may describe. Reproduction, disclosure or use witho ten authorization of Pulse is strictly forbidden.

RoHS COMPLIANT

Description: Low loss Mini Coax Jumper Cable

Series: Cable Assembly

PART NUMBER: W90XX

CHARTS

VSWR

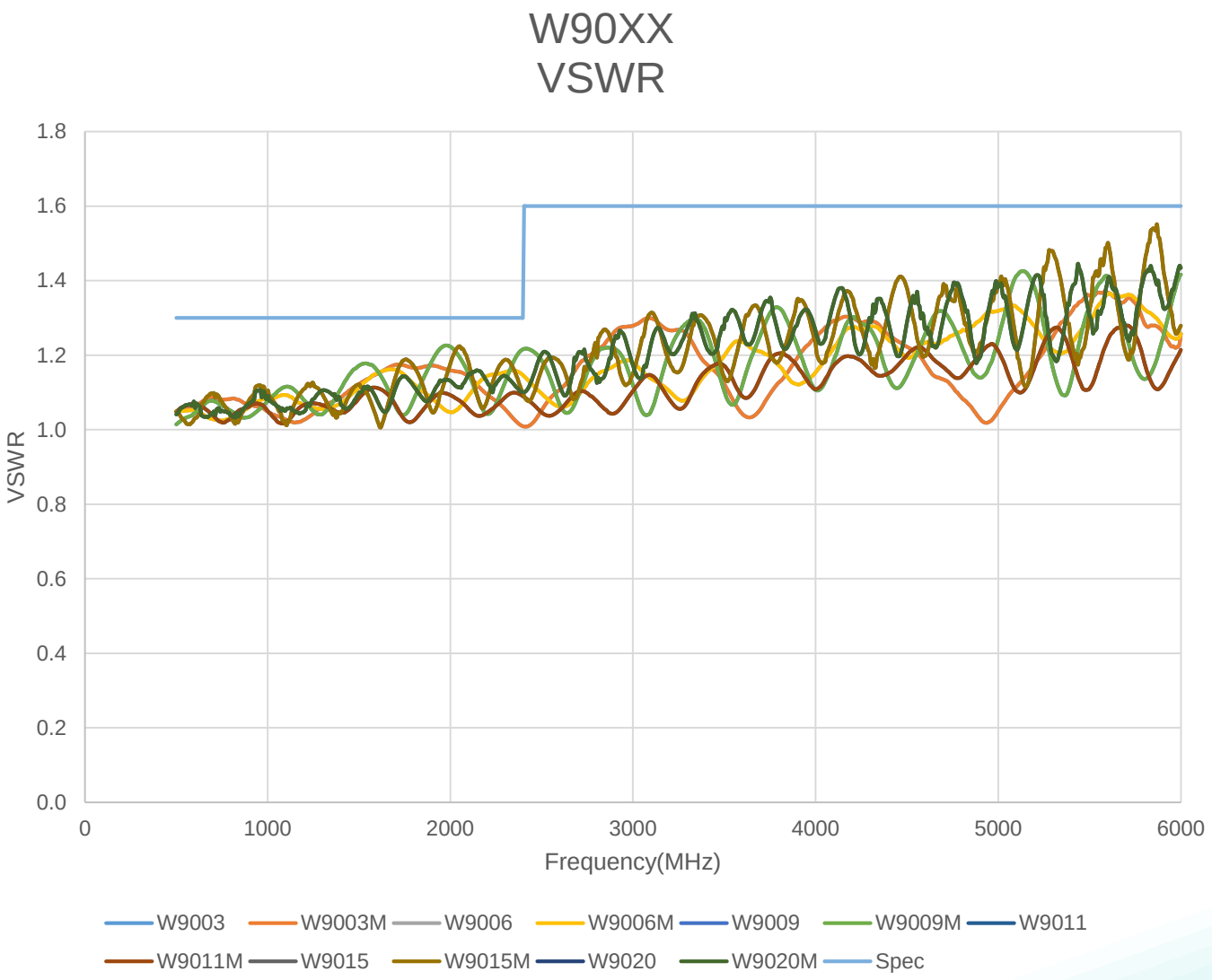

In the effort to improve our products, we reserve the right to make changes judged to be necessary.
CONFIDENTIAL AND PROPRIETARY INFORMATION
This document contains confidential and proprietary information of Pulse Electronics, Inc. (Pulse) and is protected by copyright, trade secret and other state and federal laws. Its receipt or possession does not convey any rights to reproduce, disclose its contents, or to manufacture, use or sell anything it may describe. Reproduction, disclosure or use witho ten authorization of Pulse is strictly forbidden.

RoHS COMPLIANT

Description: Low loss Mini Coax Jumper Cable

Series: Cable Assembly

PART NUMBER: W90XX

CHARTS

Insert Loss

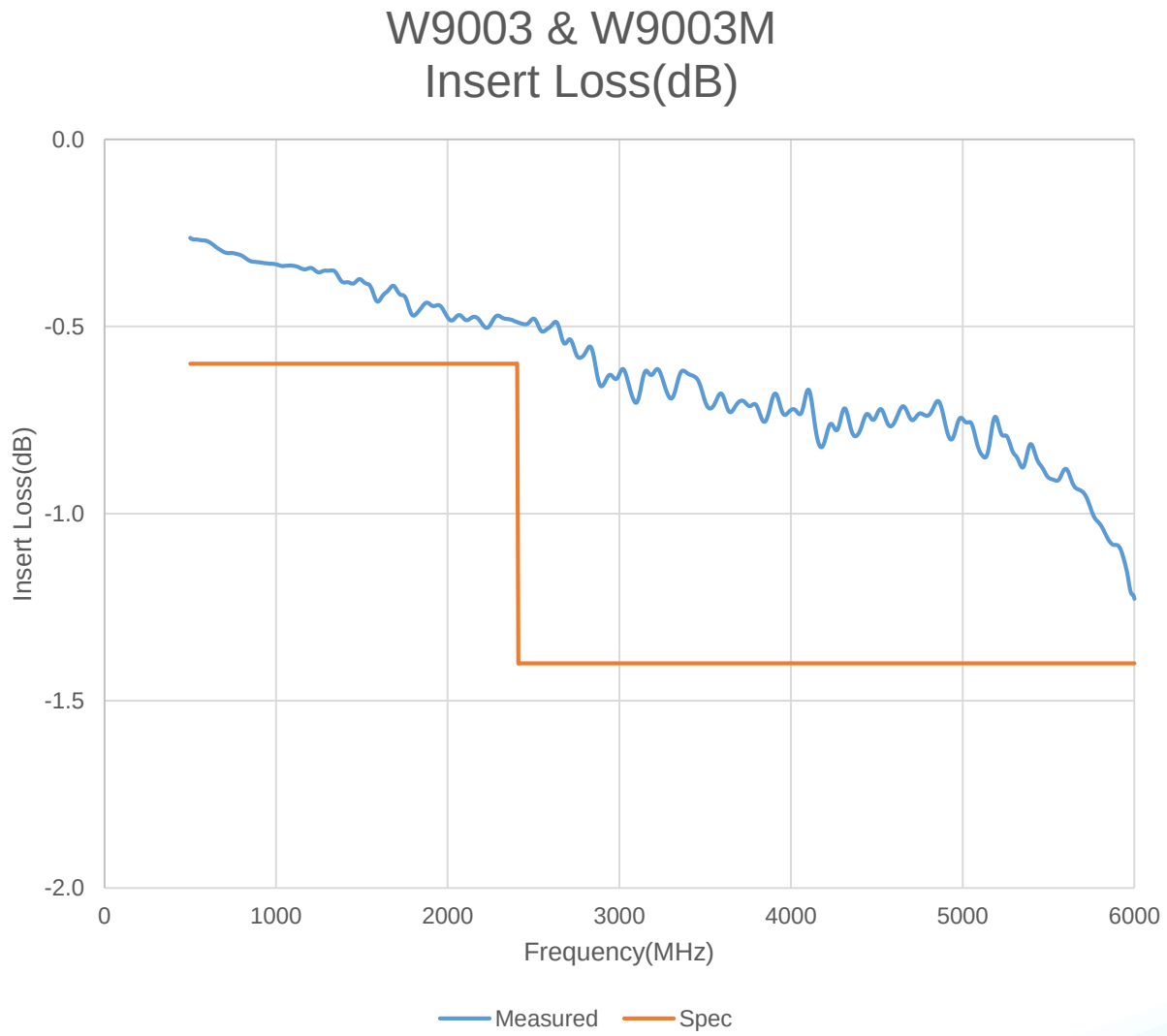

In the effort to improve our products, we reserve the right to make changes judged to be necessary.
CONFIDENTIAL AND PROPRIETARY INFORMATION
This document contains confidential and proprietary information of Pulse Electronics, Inc. (Pulse) and is protected by copyright, trade secret and other state and federal laws. Its receipt or possession does not convey any rights to reproduce, disclose its contents, or to manufacture, use or sell anything it may describe. Reproduction, disclosure or use witho ten authorization of Pulse is strictly forbidden.

RoHS COMPLIANT

Series: Cable Assembly

Description: Low loss Mini Coax Jumper Cable

PART NUMBER: W90XX

CHARTS

Insert Loss

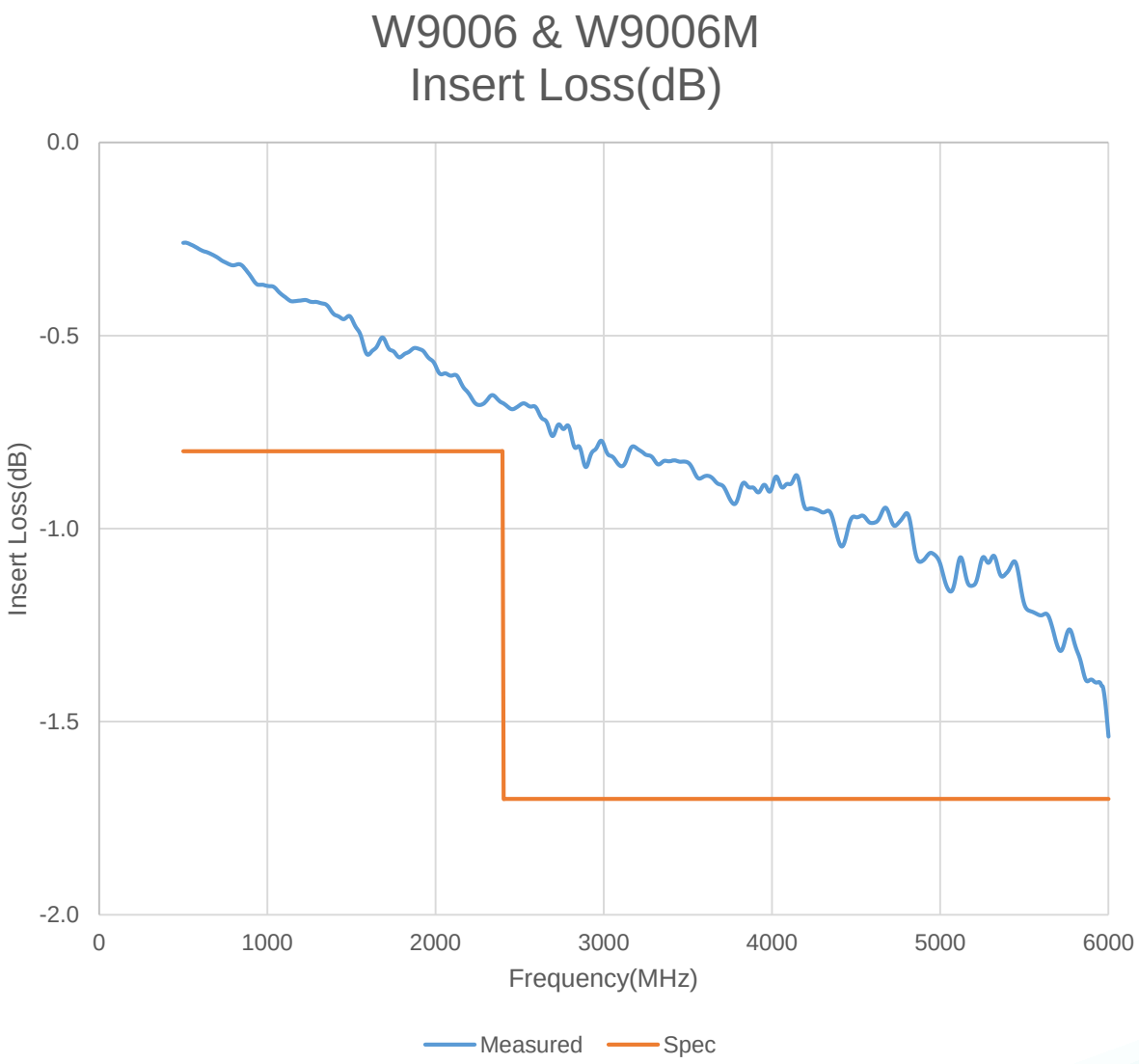

In the effort to improve our products, we reserve the right to make changes judged to be necessary.
CONFIDENTIAL AND PROPRIETARY INFORMATION
This document contains confidential and proprietary information of Pulse Electronics, Inc. (Pulse) and is protected by copyright, trade secret and other state and federal laws. Its receipt or possession does not convey any rights to reproduce, disclose its contents, or to manufacture, use or sell anything it may describe. Reproduction, disclosure or use witho ten authorization of Pulse is strictly forbidden.

RoHS COMPLIANT

Description: Low loss Mini Coax Jumper Cable

Series: Cable Assembly

PART NUMBER: W90XX

CHARTS

Insert Loss

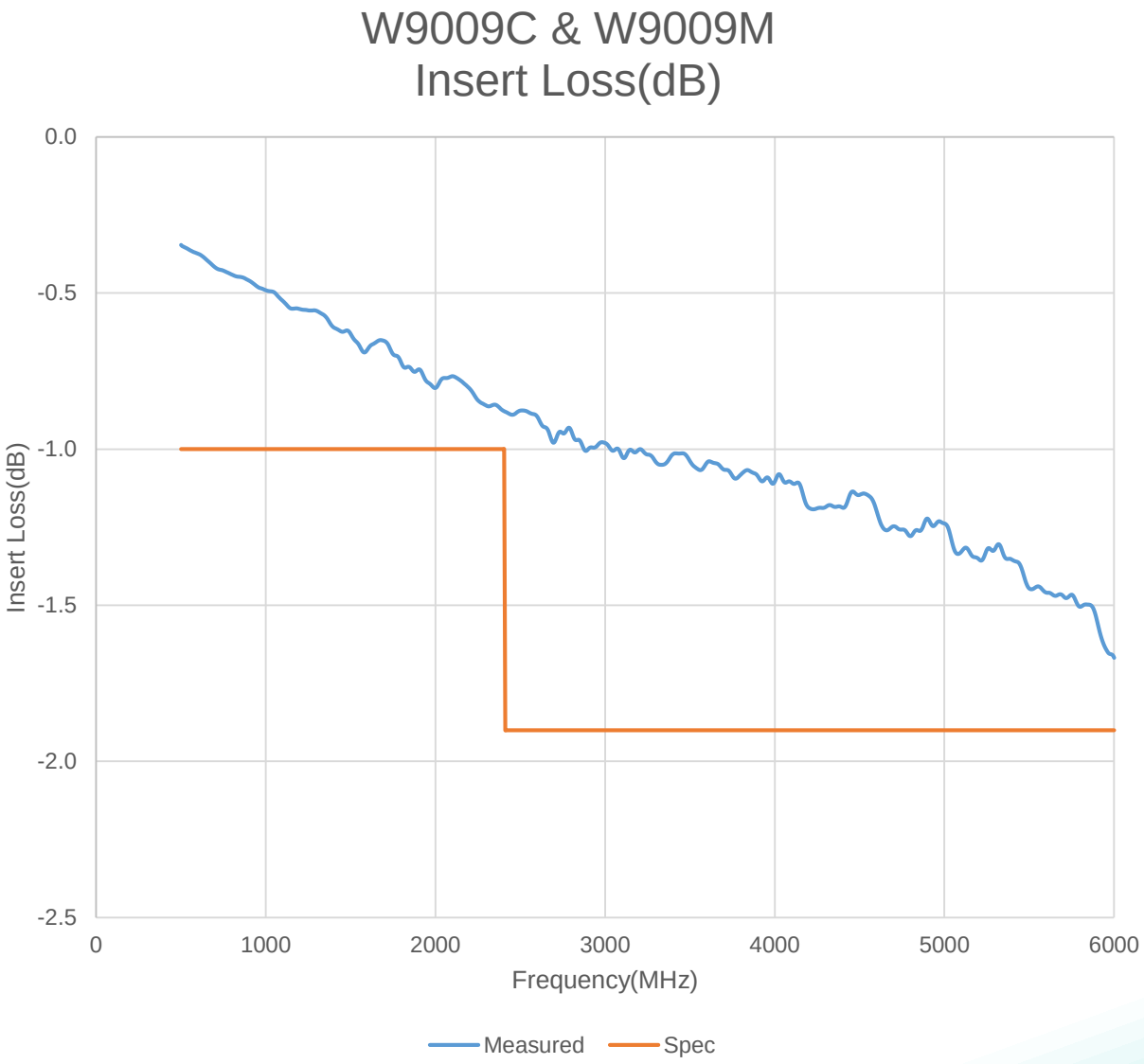

In the effort to improve our products, we reserve the right to make changes judged to be necessary.
CONFIDENTIAL AND PROPRIETARY INFORMATION
This document contains confidential and proprietary information of Pulse Electronics, Inc. (Pulse) and is protected by copyright, trade secret and other state and federal laws. Its receipt or possession does not convey any rights to reproduce, disclose its contents, or to manufacture, use or sell anything it may describe. Reproduction, disclosure or use witho ten authorization of Pulse is strictly forbidden.

RoHS COMPLIANT

Description: Low loss Mini Coax Jumper Cable

Series: Cable Assembly

PART NUMBER: W90XX

CHARTS

Insert Loss

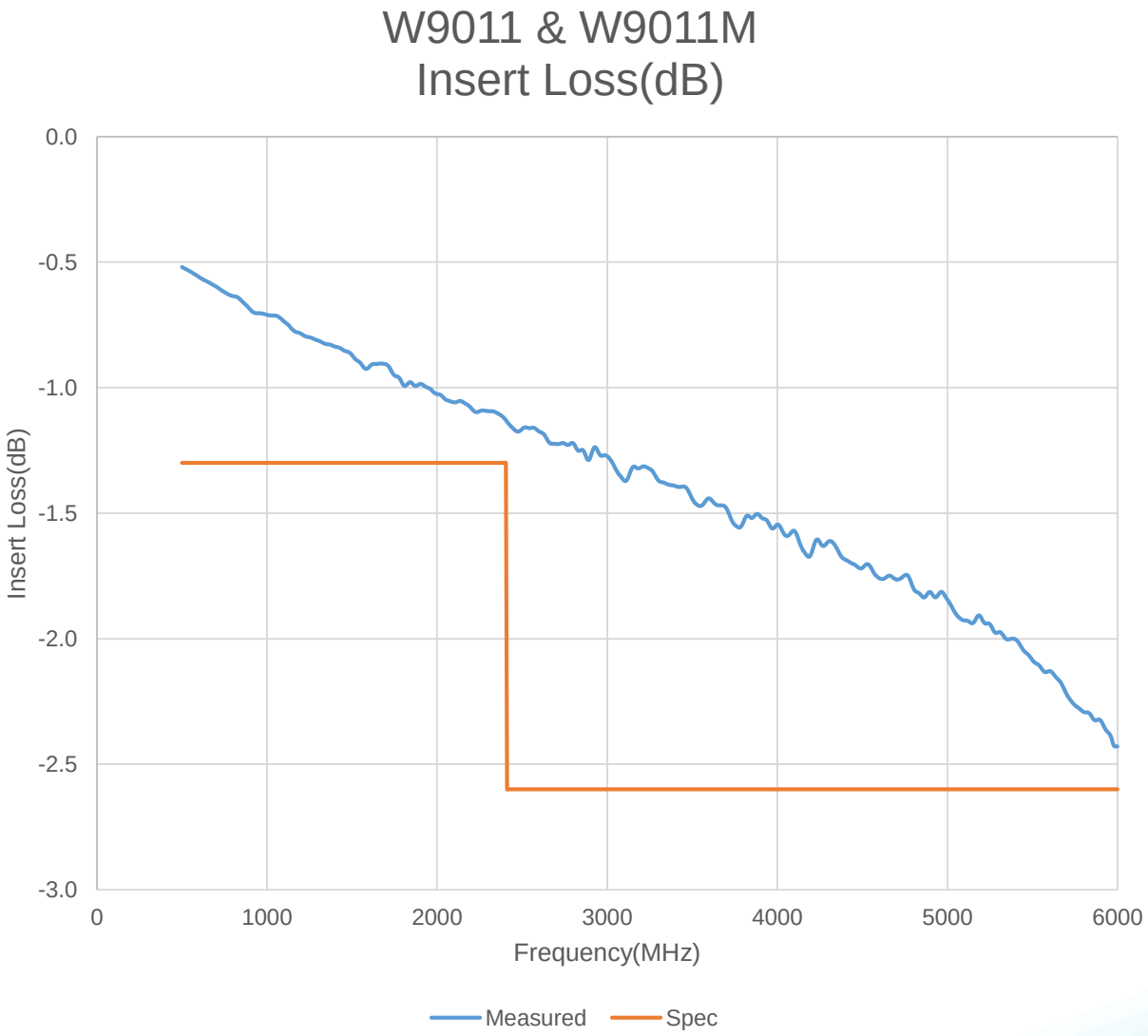

In the effort to improve our products, we reserve the right to make changes judged to be necessary.
CONFIDENTIAL AND PROPRIETARY INFORMATION
This document contains confidential and proprietary information of Pulse Electronics, Inc. (Pulse) and is protected by copyright, trade secret and other state and federal laws. Its receipt or possession does not convey any rights to reproduce, disclose its contents, or to manufacture, use or sell anything it may describe. Reproduction, disclosure or use witho ten authorization of Pulse is strictly forbidden.

RoHS COMPLIANT

Series: Cable Assembly

Description: Low loss Mini Coax Jumper Cable

PART NUMBER: W90XX

CHARTS

Insert Loss

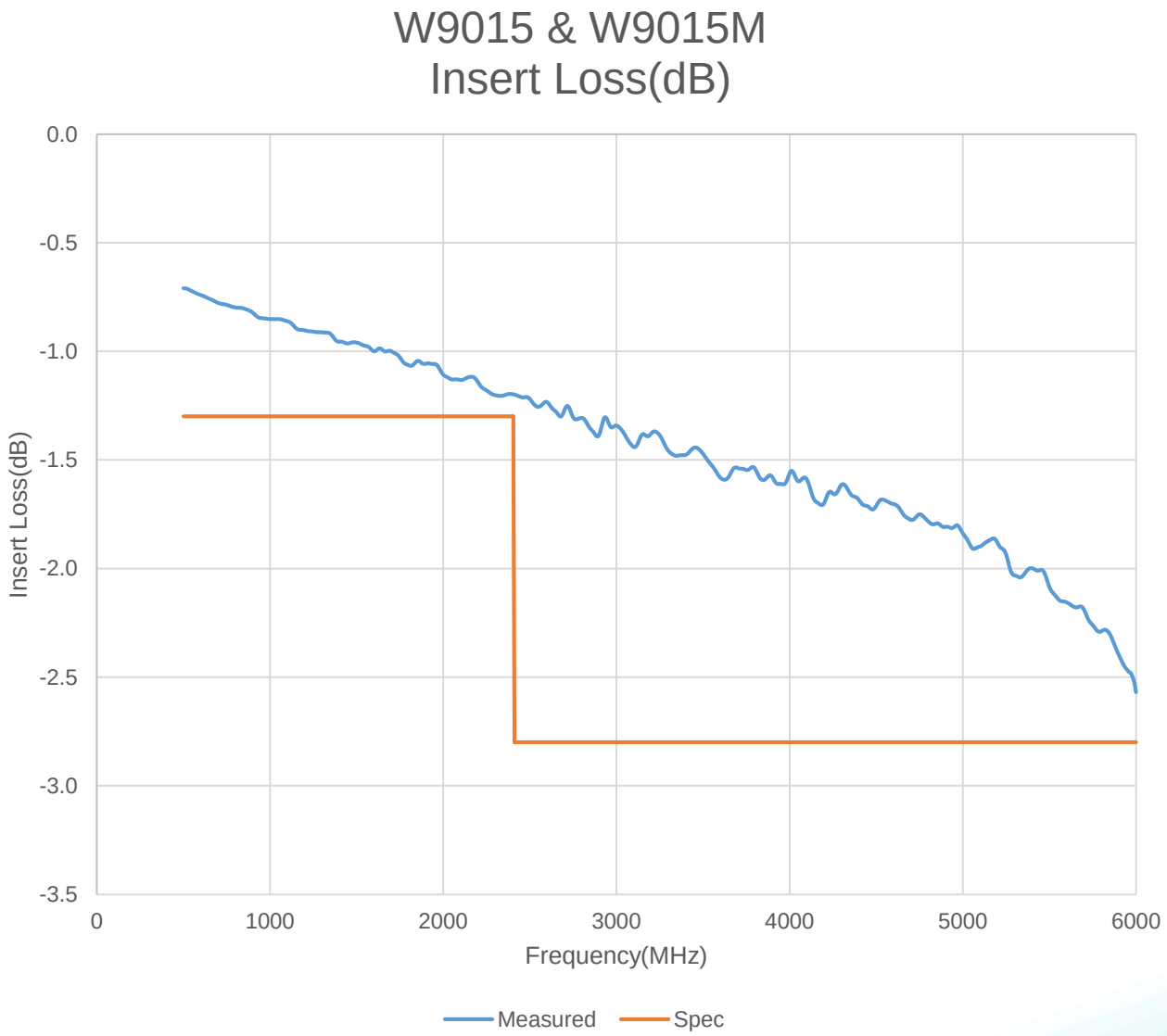

In the effort to improve our products, we reserve the right to make changes judged to be necessary.
CONFIDENTIAL AND PROPRIETARY INFORMATION
This document contains confidential and proprietary information of Pulse Electronics, Inc. (Pulse) and is protected by copyright, trade secret and other state and federal laws. Its receipt or possession does not convey any rights to reproduce, disclose its contents, or to manufacture, use or sell anything it may describe. Reproduction, disclosure or use witho ten authorization of Pulse is strictly forbidden.

RoHS COMPLIANT

Series: Cable Assembly

Description: Low loss Mini Coax Jumper Cable

PART NUMBER: W90XX

CHARTS

Insert Loss

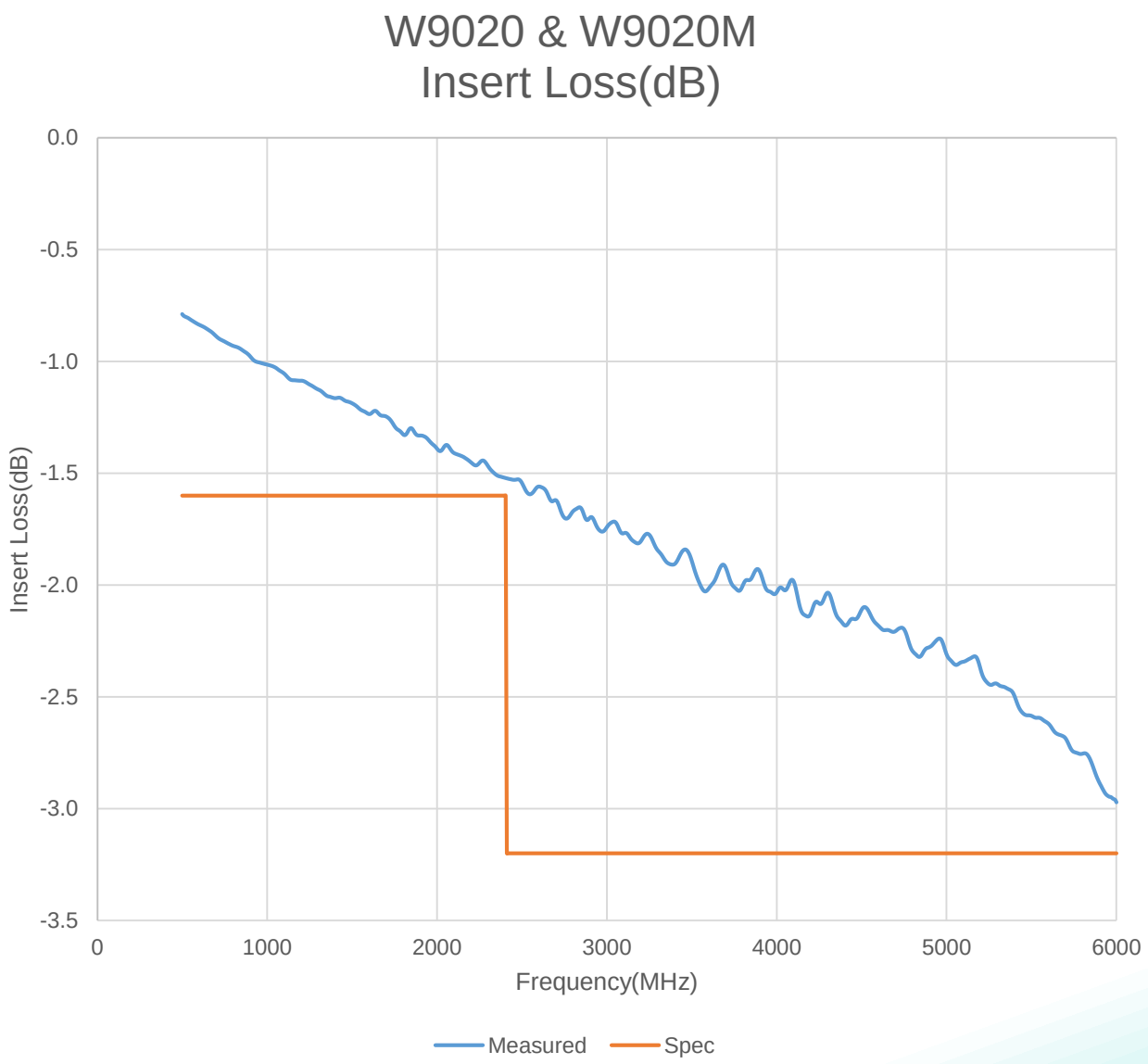

In the effort to improve our products, we reserve the right to make changes judged to be necessary.
CONFIDENTIAL AND PROPRIETARY INFORMATION
This document contains confidential and proprietary information of Pulse Electronics, Inc. (Pulse) and is protected by copyright, trade secret and other state and federal laws. Its receipt or possession does not convey any rights to reproduce, disclose its contents, or to manufacture, use or sell anything it may describe. Reproduction, disclosure or use witho ten authorization of Pulse is strictly forbidden.

RoHS COMPLIANT

Description: Low loss Mini Coax Jumper Cable

Series: Cable Assembly

PART NUMBER: W90XX

PACKAGING

50pcs /bag

500pcs/package box

Package box: 460mm*235mm*70mm

In the effort to improve our products, we reserve the right to make changes judged to be necessary.
CONFIDENTIAL AND PROPRIETARY INFORMATION
This document contains confidential and proprietary information of Pulse Electronics, Inc. (Pulse) and is protected by copyright, trade secret and other state and federal laws. Its receipt or possession does not convey any rights to reproduce, disclose its contents, or to manufacture, use or sell anything it may describe. Reproduction, disclosure or use witho ten authorization of Pulse is strictly forbidden.

RoHS COMPLIANT