QPA9418

High Linearity 0.5 W Small Cell PA

Product Overview

The QPA9418 is a high-linearity two-stage power amplifier in a low-cost surface-mount package with on-chip bias control and temperature control circuits, suitable for small cell base station applications.

The QPA9418 provides 30.6 dB gain and +27 dBm linear power over the 1805 – 1930 MHz frequency range. This amplifier is able to achieve −48 dBc ACLR at +27 dBm output power using 20 MHz LTE signal.

The QPA9418 integrates two high performance amplifier stages onto a module to allow for a compact system design and requires very few external components for operation. The amplifier is bias adjustable allowing the amplifier's power consumption to be optimized. The QPA9418 is available in a 7 x 7 mm surface mount package.



7 mm x 7 mm Leadless SMT Package

Key Features

- 1.805 – 1.930 GHz Frequency Range
- Fully integrated, 2 Stage Power Amplifier
- Internally Matched 50 Ω Input / Output
- −48 dBc ACLR at Pavg = +27 dBm
- 30.6 dB Gain
- 14.5% PAE at +27 dBm
- 420 mA Quiescent Current
- On-chip Control Bias and Temp. Comp Circuit

Functional Block Diagram

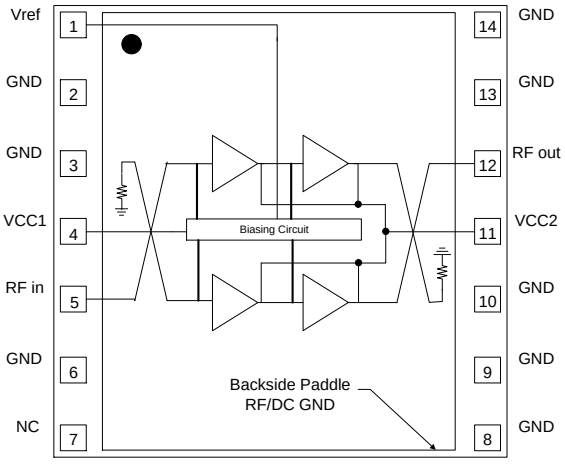

Top View

Applications

- Small Cell / Picocell
- Enterprise Femtocell
- Customer Premises Equipment (CPE)
- Data Cards and Terminals
- Distributed Antenna Systems (DAS)
- Booster Amps, Repeaters

Ordering Information

Part No.	Description
QPA9418TR13	2500 pieces on a 13" reel
QPA9418EVB-01	1805 – 1930 MHz Evaluation board

Absolute Maximum Ratings

Parameter	Rating
Storage Temperature	−55 to +150 °C
Supply Voltage (V_{CC})	+6 V
V_{ref}	+3.5 V
RF Input Power, CW, 50Ω, T=25˚C	+13 dBm
Tj at T_{CASE} = 125°C	+205°C

Operation of this device outside the parameter ranges given above may cause permanent damage.

Recommended Operating Conditions

Parameter	Min	Typ	Max	Units
V_{CC1}, V_{CC2}	+3.6	+4.5	+5.25	V
V_{ref}	+2.75	+2.85	+2.95	V
T_{CASE}	−40		+85	°C
Tj at T_{CASE} max			+165	°C

Electrical specifications are measured at specified test conditions. Specifications are not guaranteed over all recommended operating conditions.

Electrical Specifications

Test conditions unless otherwise noted: V_{CC1} = V_{CC2} = +4.5 V, Vref = +2.85 V, Temp= +25 °C

Parameter	Conditions	Min	Typ	Max	Units
Operational Frequency Range		1805		1930	MHz
Test Frequency			1840		MHz
Gain	CW, Small Signal	28	30.6	34	dB
Input Return Loss		15	20		dB
Output Return Loss			25		dB
P1dB	CW		35.4		dBm
ACLR	P_{OUT} +27 dBm, 20 MHz LTE E-TM1.1, 9.5 dB PAR		−48.0	−45.0	dBc
	P_{OUT} +27 dBm, 20 MHz x 2 LTE E-TM1.1, 9.5dB PAR		−45.5		dBc
	P_{OUT} +27 dBm, 15 MHz LTE E-TM1.1, 9.5dB PAR		−50.0		dBc
	P_{OUT} +27 dBm, 10 MHz LTE E-TM1.1, 9.5dB PAR		−49.0		dBc
	P_{OUT} +27 dBm, 5 MHz LTE E-TM1.1, 9.5dB PAR		−47.5		dBc
Power Added Efficiency	P_{OUT} +27 dBm, 20 MHz LTE E-TM1.1, 9.5 dB PAR	13	14.5		%
Quiescent Current, I_{CQ}[1]	V_{CC1} + V_{CC2}	330	420	510	mA
Leakage Current on V_{CC}	V_{CC} +4.5V, V_{ref} 0V		3	10	µA
Reference Current , I_{ref}	Temp -40°C to +85°C, V_{ref} = +2.85V		13	19.5	mA
Operational Current, I_{CC}	P_{OUT} +27 dBm, 20 MHz LTE E-TM1.1, 9.5 dB PAR		680	920	mA
Wake Up Time	50% of control signal to 90% of the RF output		1230		ns
Power Down Time	50% of control signal to 10% of the RF output		570		ns
Spurious Output Level	P_{OUT} ≤ +27dBm, In & Out of band load VSWR ≤ 10:1		−60		dBc
VSWR survivability	No permanent degradation or failure	10:1			-
Harmonics	$2F_0$ (P_{OUT} +27 dBm), CW signal		−46	−37	dBc
	$3F_0$ (P_{OUT} +27 dBm), CW signal		−51		dBc
	$4F_0$ (P_{OUT} +27 dBm), CW signal		−65	−63	dBc
Thermal Resistance, θ_{jc}	Module (junction to case)			18.5	°C/W

Notes:
1. Vcc1 draws very little current and provides the bias voltage to the current mirror circuit along with Vref to set the bias point for the whole amplifier.
2. Control signal applied to Vref Pin, 0 to 2.85V

QPA9418 Application Circuit Schematic and Layout

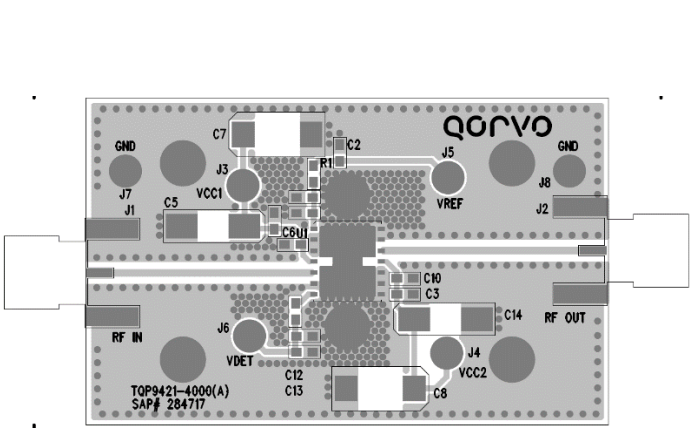

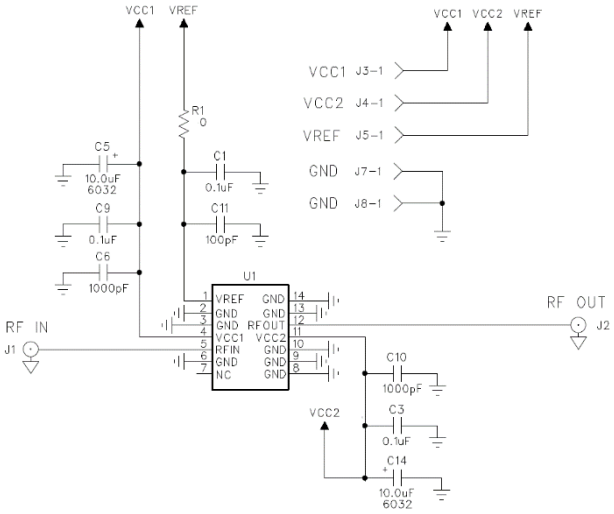

Bill of Material - QPA9418EVB-01

Ref Designation	Value	Description	Manufacture	Part Number
-	-	Printed Circuit Board	Qorvo	
U1	-	Amplifier, High Linearity 0.5 W Power	Qorvo	QPA9418
R1	0 Ω	Resistor, Chip, 0603, 5%	various	
C1	0.01 µF	Capacitor, Chip, 0603, 5%	various	
C11	100 pF	Capacitor, Chip, 0603, 5%	various	
C3, C9	0.1 µF	Capacitor, Chip, 0603, 5%	various	
C5, C14	10 µF	Capacitor, Chip, 6032, 10%, Tantalum	various	
C6, C10	1000 pF	Capacitor, Chip, 0603, 5%, NPO/C0G	various	

QPA9418EVB-01 Typical Performances

Test conditions unless otherwise noted: V_{CC1} = V_{CC2} = +4.5 V, Vref = +2.85 V, Pout 27dBm, 1840MHz, Signal PAR 9.5dB, Temp= +25 °C

LTE Signal BW	5MHz	10MHz	15MHz	20MHz	20MHz x 2	Units
ACLR1-Low	-47.9	-48.8	-49.6	-49.1	-46.4	dBc
ACLR1-high	-49.7	-50.1	-49.9	-49.7	-45.6	dBc

Parameter	Conditions	-40°C	+25°C	+85°C	Units
Gain	P_{OUT} = +27 dBm, 20 MHz LTE E-TM1.1, 9.5dB PAR	32.2	30.6	28.8	dB
ACLR		-50.3	-49.1	-46.9	dBc
PAE		15.7	14.7	14.3	%
P1dB	CW	+35.8	+35.3	+34.7	dBm

Test Frequency = 1840MHz

Performance Plots

Test conditions unless otherwise noted: V_{CC1} = V_{CC2} = +4.5V, Vref = +2.85 V, LTE signal PAR = 9.5dB, Temp.= +25 °C

Gain vs. Frequency

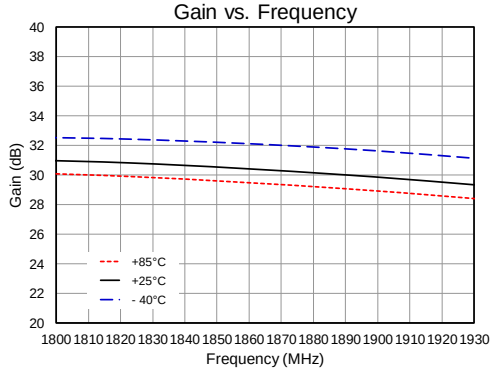

Input Return Loss vs. Frequency

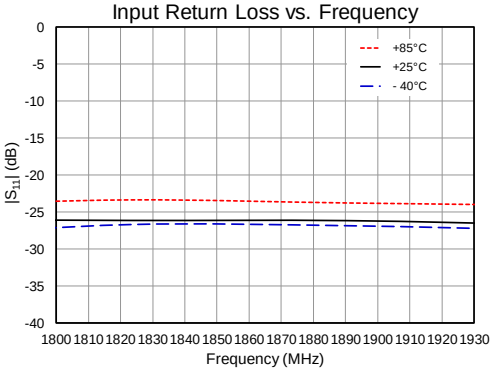

Output Return Loss vs. Frequency

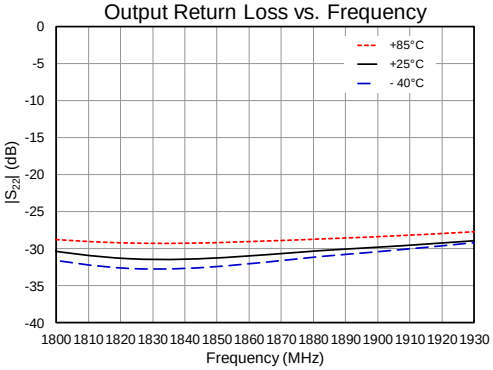

P1dB vs. Frequency

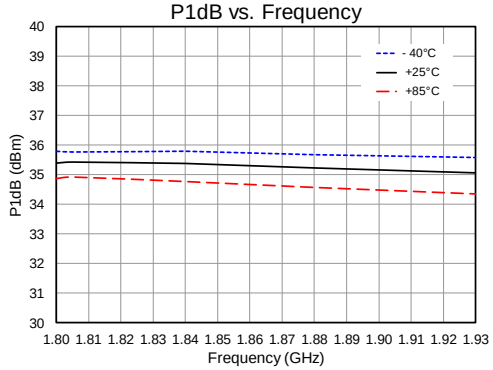

ACLR vs. Pout, LTE 20MHz

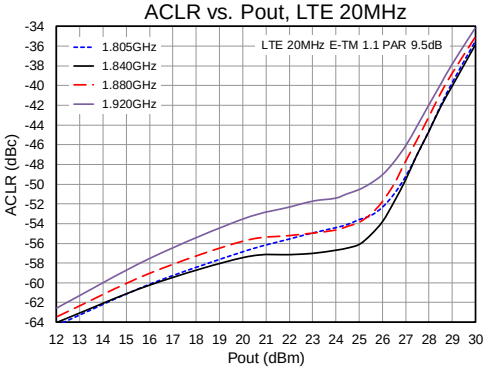

ACLR vs. Pout at 1.84GHz

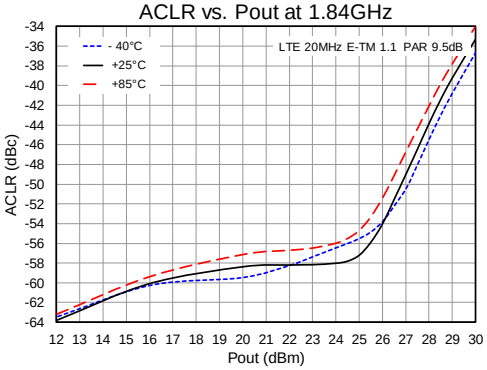

PAE vs. Pout at +25°C

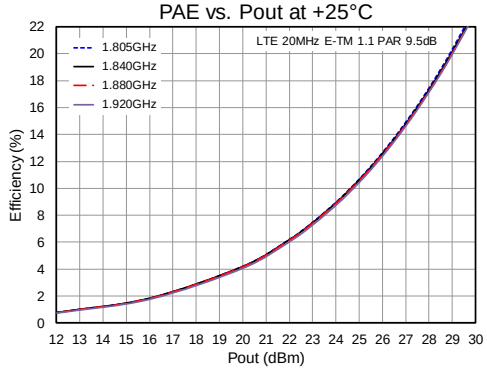

PAE vs. Pout at 1.84GHz

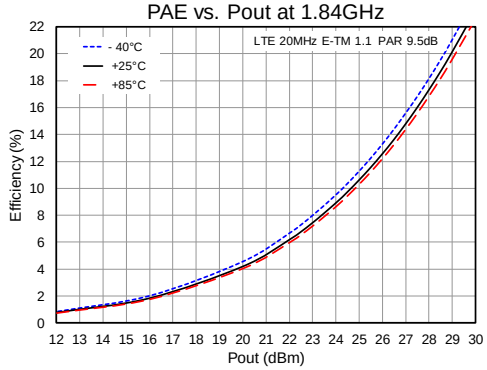

Performance Plots (continue)

Test conditions unless otherwise noted: V_{CC1} = V_{CC2} = +4.5V, Vref = +2.85 V, LTE signal PAR = 9.5dB, Temp.= +25 °C

ACLR vs. Pout, LTE 20MHz Vcc 5V

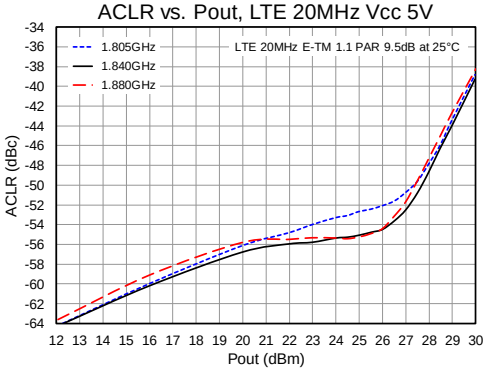

ACLR vs. Pout, LTE 5MHz

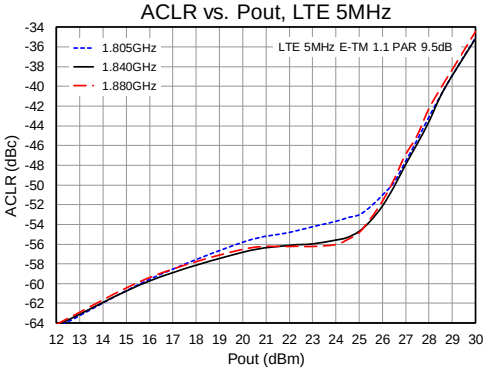

ACLR vs. Pout, LTE 10MHz

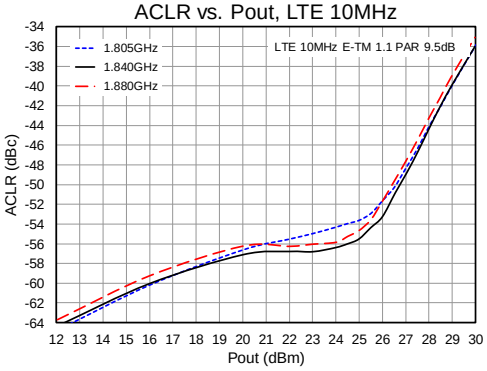

ACLR vs. Pout, LTE 15MHz

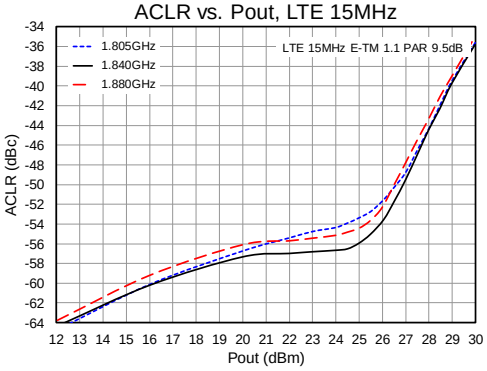

ACLR vs. Pout, LTE 20MHz x 2

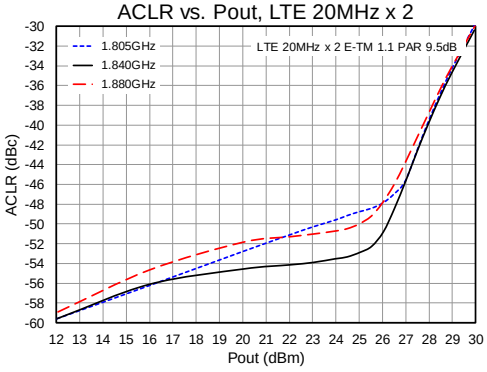

PAE vs. Pout, Carrier BW

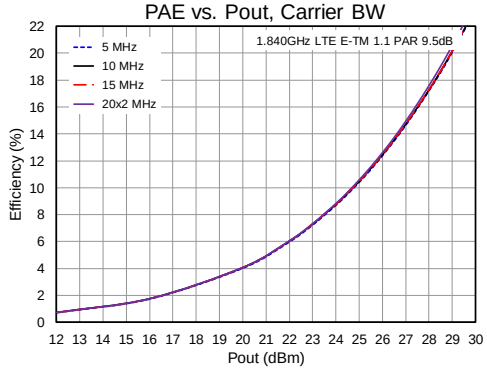

Pin Configuration and Description

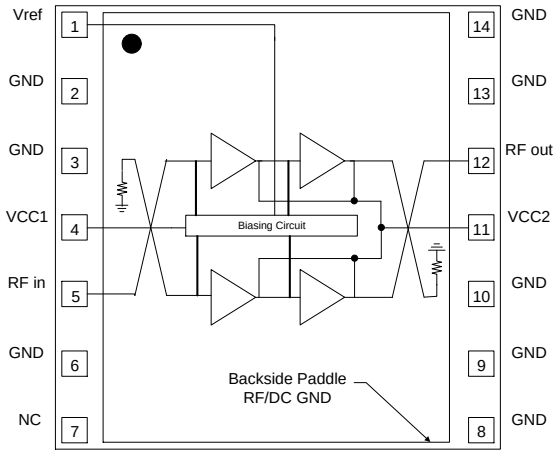

Pin No.	Label	Description
1	Vref	Provides reference voltage for internal active biasing circuit
2, 3, 6, 8, 9, 10, 13, 14	GND	RF and DC ground.
4	VCC1	Bias voltage for current mirror in combination with Vref to set the bias point.
5	RFin	RF input pin. The DC is internally blocked at this pin.
7	NC	No internal connection. Can be left open or grounded for mounting integrity.
11	VCC2	Supply to all stages.
12	RFout	RF output pin. The DC is internally blocked at this pin.
Backside Paddle	RF/DC GND	RF/DC ground. See PCB Mounting Pattern for suggested footprint.

Evaluation Board PCB Information

Qorvo PCB 284717 Material and Stack-up

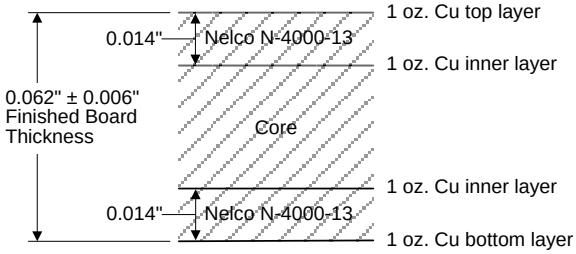

50 Ω line dimensions: width = .028”
spacing = .028”.

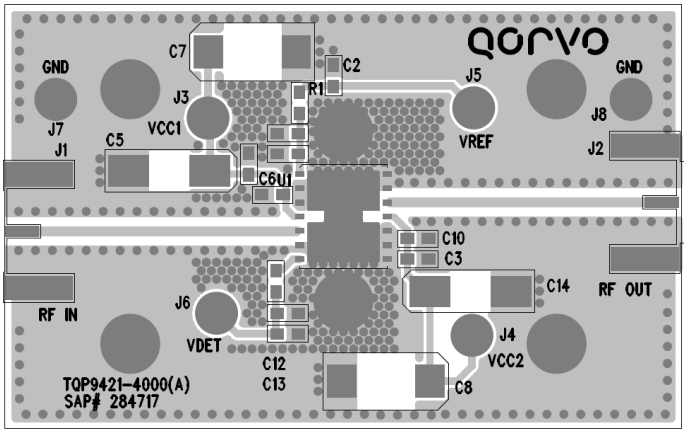

Mechanical Information

Package Marking and Dimensions

Marking: Part number – QPA9418
Trace code – Assigned by sub-contractor

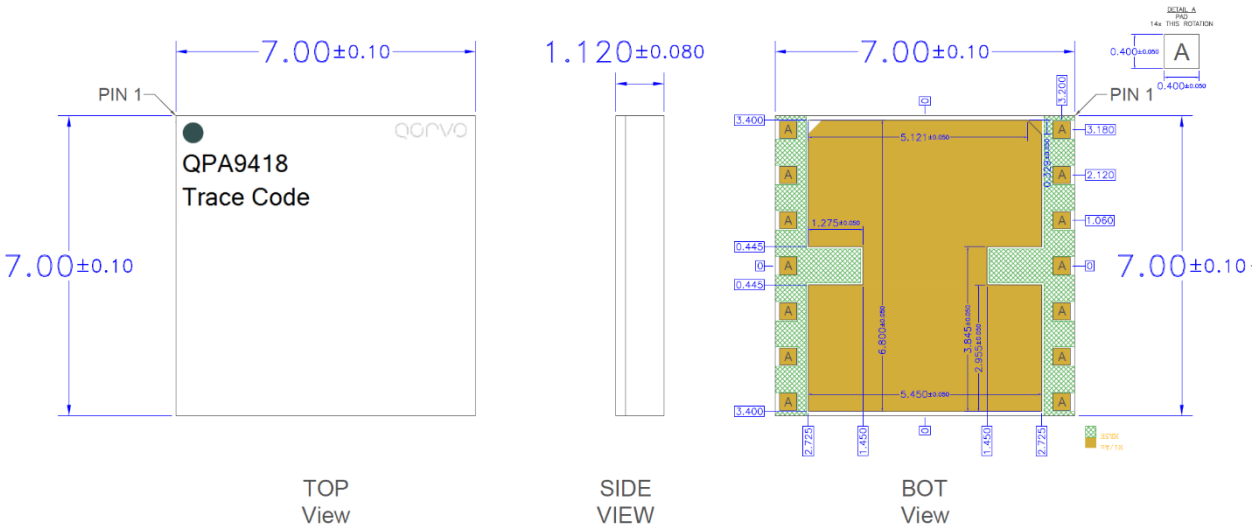

Notes:

1. All dimensions are in millimeters. Angles are in degrees.
2. Dimension and tolerance formats conform to ASME Y14.4M-1994.
3. The terminal #1 identifier and terminal numbering conform to JESD 95-1 SPP-012.

PCB Mounting Pattern

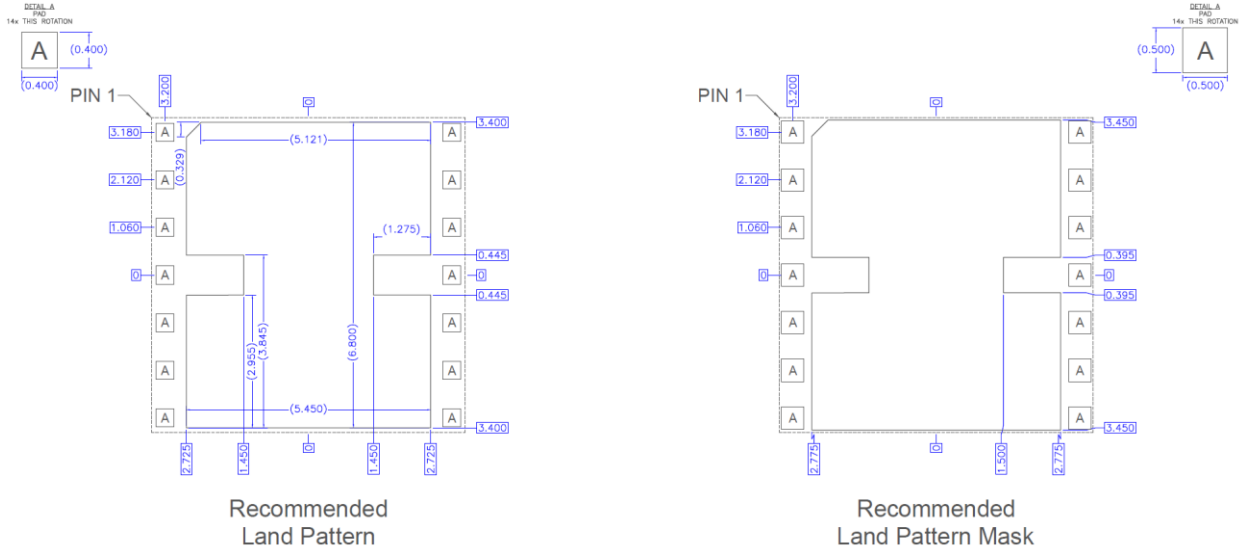

Notes:

1. A heat sink underneath the area of the PCB for the mounted device is strictly required for proper thermal operation. Damage to the device can occur without the use of one.
2. Ground / thermal via holes are critical for the proper performance of this device. Via holes should use a .35mm (#80 / .0135") diameter drill and have a final plated thru diameter of .25 mm (.010").
3. Add as much copper as possible to inner and outer layers near the part to ensure optimal thermal performance.

Tape and Reel Information – Carrier and Cover Tape Dimensions

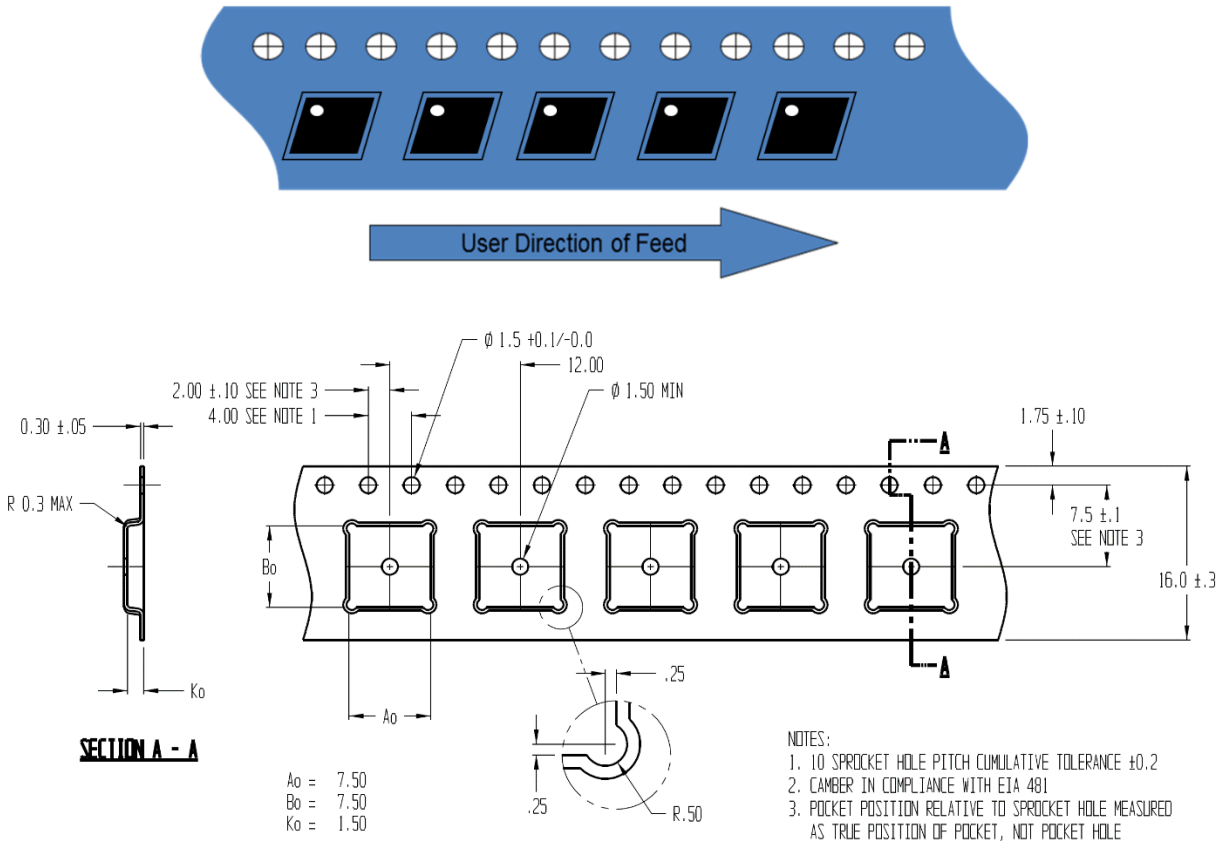

Feature	Measure	Symbol	Size (in)	Size (mm)
Cavity	Length	A0	0.295	7.50
	Width	B0	0.295	7.50
	Depth	K0	0.059	1.50
	Pitch	P1	0.472	12.0
Centerline Distance	Cavity to Perforation - Length Direction	P2	0.079	2.00
	Cavity to Perforation - Width Direction	F	0.295	7.50
Cover Tape	Width	C	0.524	13.3
Carrier Tape	Width	W	0.630	16.0

Tape and Reel Information – Reel Dimensions (13”)

Standard T/R size = 2,500 pieces on a 13” reel.

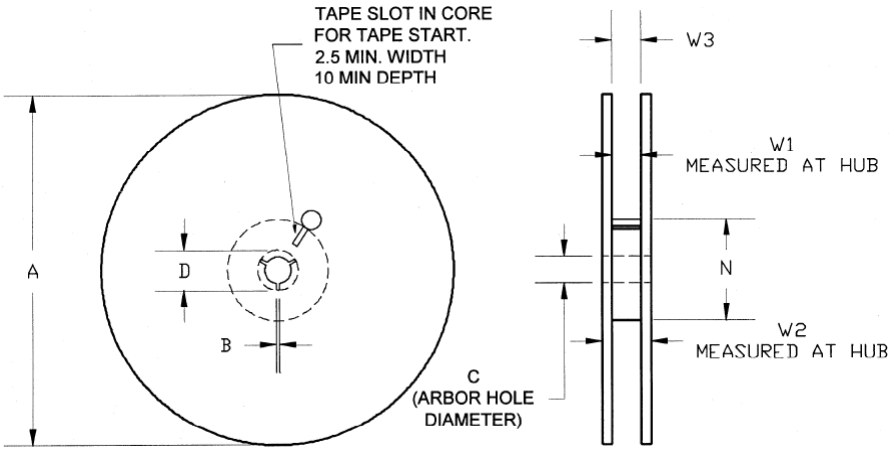

Feature	Measure	Symbol	Size (in)	Size (mm)
Flange	Diameter	A	12.992	330.0
	Thickness	W2	0.874	22.2
	Space Between Flange	W1	0.661	16.8
Hub	Outer Diameter	N	4.016	102.0
	Arbor Hole Diameter	C	0.512	13.0
	Key Slit Width	B	0.079	2.0
	Key Slit Diameter	D	0.787	20.0

Tape and Reel Information – Tape Length and Label Placement

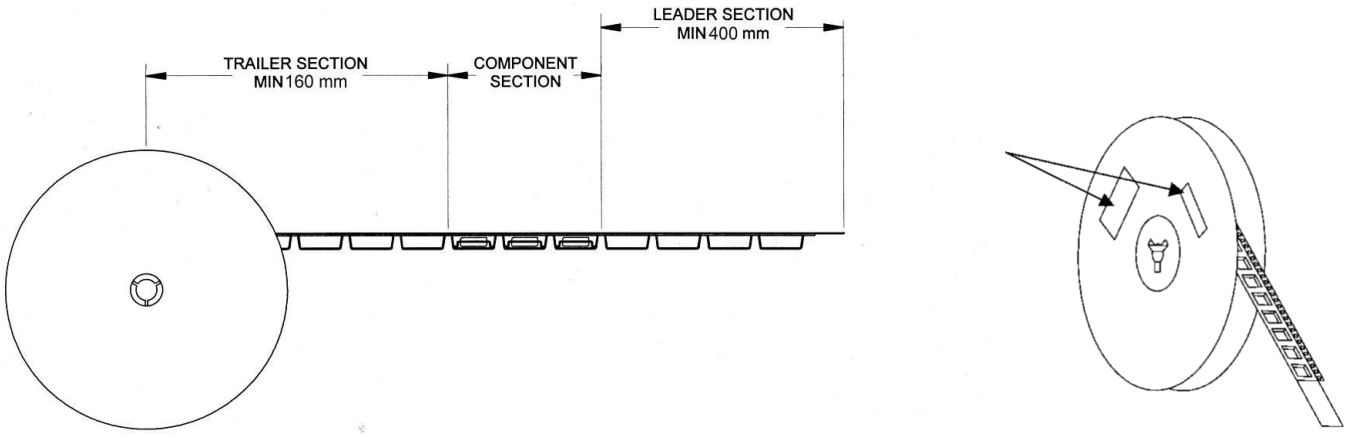

Notes:
1. Empty part cavities at the trailing and leading ends are sealed with cover tape. See EIA 481-1-A.
2. Labels are placed on the flange opposite the sprockets in the carrier tape.

Handling Precautions

Parameter	Rating	Standard
ESD – Human Body Model (HBM)	Class 1A	ESDA / JEDEC JS-001-2012
ESD – Charged Device Model (CDM)	Class C3	JEDEC JESD22-C101F
MSL – Moisture Sensitivity Level	Level 3	IPC/JEDEC J-STD-020



Caution!
ESD-Sensitive Device

Solderability

Compatible with both lead-free (260°C max. reflow temp.) and tin/lead (245°C max. reflow temp.) soldering processes.
Solder profiles available upon request.

Contact plating: Electrolytic plated Au over Ni *(Plating thickness: Ni 5.0±30µm, Au 0.10µm minimum)*

RoHS Compliance

This part is compliant with the 2011/65/EU RoHS directive (Restrictions on the Use of Certain Hazardous Substances in Electrical and Electronic Equipment) as amended by Directive 2015/863/EU. This product also has the following attributes:

- Product uses RoHS Exemption 7c-I to meet RoHS Compliance requirements.
- Halogen Free (Chlorine, Bromine)
- Antimony Free
- TBBP-A ($C_{15}H_{12}Br_4O_2$) Free
- PFOS Free
- SVHC Free

Contact Information

For the latest specifications, additional product information, worldwide sales and distribution locations:

Web: www.qorvo.com **Tel: 1-844-890-8163**

Email: customer.support@qorvo.com

For technical questions and application information:

Email: appsupport@qorvo.com

Important Notice

The information contained herein is believed to be reliable; however, Qorvo makes no warranties regarding the information contained herein and assumes no responsibility or liability whatsoever for the use of the information contained herein. All information contained herein is subject to change without notice. Customers should obtain and verify the latest relevant information before placing orders for Qorvo products. The information contained herein or any use of such information does not grant, explicitly or implicitly, to any party any patent rights, licenses, or any other intellectual property rights, whether with regard to such information itself or anything described by such information. **THIS INFORMATION DOES NOT CONSTITUTE A WARRANTY WITH RESPECT TO THE PRODUCTS DESCRIBED HEREIN, AND QORVO HEREBY DISCLAIMS ANY AND ALL WARRANTIES WITH RESPECT TO SUCH PRODUCTS WHETHER EXPRESS OR IMPLIED BY LAW, COURSE OF DEALING, COURSE OF PERFORMANCE, USAGE OF TRADE OR OTHERWISE, INCLUDING THE IMPLIED WARRANTIES OF MERCHANTABILITY AND FITNESS FOR A PARTICULAR PURPOSE.**

Without limiting the generality of the foregoing, Qorvo products are not warranted or authorized for use as critical components in medical, life-saving, or life-sustaining applications, or other applications where a failure would reasonably be expected to cause severe personal injury or death.

Copyright 2019 © Qorvo, Inc. | Qorvo is a registered trademark of Qorvo, Inc.