TQL9093

Ultra-Low Noise, Flat Gain LNA

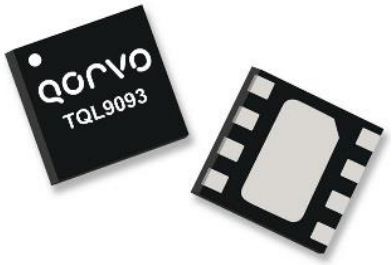

8 pin 2x2 mm DFN Package

General Description

The TQL9093 is a flat-gain, high-linearity, ultra-low noise amplifier in a small 2 x 2 mm surface-mount package. The LNA provides a gain flatness of 2 dB (peak-to-peak) over a wide bandwidth from 1.5 to 4 GHz. At 2.6 GHz, the amplifier typically provides 20 dB gain, +41.5 dBm OIP3 at a 120 mA bias setting, and 0.6 dB noise figure. The LNA can be biased from a single positive supply ranging from 3.3 to 5 volts. The device is housed in a green/RoHS-compliant industry-standard 2x2 mm package.

The TQL9093 is internally matched using a high-performance E-pHEMT process and only requires five external components for operation from a single positive supply: an external RF choke and blocking/bypass capacitors and a bias resistor going to pin 1. This LNA integrates a shut-down biasing capability to allow for operation in TDD applications.

The TQL9093 is optimized for linear performance across the 1.5 to 4 GHz frequency band but can operate down to 600 MHz.

Product Features

- 0.6-4.2 GHz Operational Bandwidth
- Ultra-low noise figure, 0.67 dB NF @ 2.6 GHz
- >19 dB gain across 1.5 to 4 GHz
- Flat 2 dB gain variation across 1.5 to 4 GHz
- Bias adjustable for linearity optimization
- 41.5 dBm OIP3 at 120mA I_{DD}
- Shut-down mode pin with 1.8V Logic
- Unconditionally stable
- Integrated shutdown control pin
- Maintains OFF state with high Pin drive
- +3V to +5V supply; does not require -Vgg

Functional Block Diagram

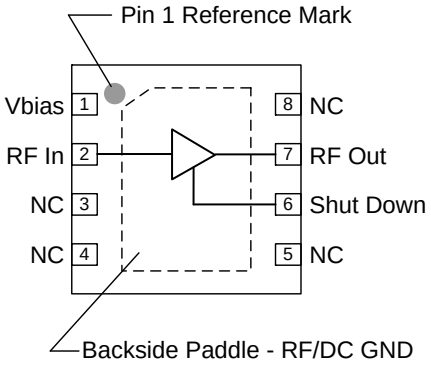

Applications

- Repeaters / DAS
- Mobile Infrastructure
- LTE / WCDMA / CDMA / GSM
- General Purpose Wireless
- TDD or FDD systems

Ordering Information

Part No.	Description
TQL9093	Ultra-low noise, Flat Gain LNA
TQL9093-PCB	0.6-4.2 GHz Evaluation Board

Standard T/R size = 2500 pieces on a 7” reel

Absolute Maximum Ratings

Parameter	Rating
Storage Temperature	−65 to +150°C
Supply Voltage (V_{DD})	+7 V
RF Input Power, CW, 50Ω, T=25°C	+33 dBm
RF Input Power, WCDMA, 10dB PAR	+27 dBm
RF Input Power, CW, OFF State	+33 dBm

Operation of this device outside the parameter ranges given above may cause permanent damage.

Recommended Operating Conditions

Parameter	Min	Typ	Max	Units
Supply Voltage (V_{DD})	3.3	5.0	5.25	V
T_{CASE}	−40		+105	°C
Tj for >10^6 hours MTTF			+190	°C

Electrical specifications are measured at specified test conditions. Specifications are not guaranteed over all recommended operating conditions.

Electrical Specifications

Test conditions unless otherwise noted: V_{DD} = +5V, Temp = +25°C, 50 Ω system.

Parameter	Conditions	Min	Typ	Max	Units
Operational Frequency Range		600		4200	MHz
Test Frequency			2600		MHz
Gain		18.5	20	21.7	dB
Gain Flatness	1500-4000MHz		2.0		dB
Input Return Loss			14		dB
Output Return Loss			14.5		dB
Noise Figure (1)			0.67	1.0	dB
Output P1dB			+21.7		dBm
Output IP3	Pout=+4 dBm/tone, Δf=1 MHz	+35	+41.5		dBm
Power Shutdown Control (pin 6)	On state	0		0.63	V
	Off state (Power down)	1.17		V_{DD}	V
Current, I_{DD}	On state	80	120	160	mA
	Off state (Power down)		4	8	mA
Shutdown pin current, I_{SD}	V_{PD} ≥ 1.17 V		140		µA
Switching Speed	LNA ON to OFF		315		ns
	LNA OFF to ON		290		ns
Thermal Resistance, θ_{jc}	channel to case		44		°C/W

Note: 1. Noise figure data has input trace loss deducted.

S-Parameters

Test Conditions: V_{DD}=+5 V, I_{DD}=120 mA (typ.), T=+25°C, 50 Ω system, Reference planes at device pins

Freq (GHz)	S11 (dB)	S11 (ang)	S21 (dB)	S21 (ang)	S12 (dB)	S12 (ang)	S22 (dB)	S22 (ang)
0.6	-8.86	-139.90	22.74	78.61	-31.50	39.70	-13.38	64.84
0.7	-10.03	-150.92	21.91	63.87	-30.56	31.41	-15.86	54.42
0.8	-11.16	-160.19	21.18	50.66	-29.82	23.53	-18.47	45.38
0.9	-12.30	-167.88	20.55	38.60	-29.22	16.00	-21.30	37.43
1.0	-13.47	-174.08	20.00	27.41	-28.74	8.73	-24.56	30.37
1.1	-14.68	-178.79	19.54	16.90	-28.34	1.70	-28.65	23.93
1.2	-15.95	178.14	19.16	6.93	-28.02	-5.13	-34.78	17.33
1.3	-17.27	176.97	18.84	-2.59	-27.77	-11.79	-53.16	-8.30
1.4	-18.61	178.14	18.59	-11.76	-27.57	-18.31	-38.00	-164.49
1.5	-19.88	-177.81	18.38	-20.63	-27.41	-24.71	-31.62	-170.37
1.6	-20.90	-170.59	18.23	-29.26	-27.30	-31.03	-28.04	-174.65
1.7	-21.40	-160.85	18.12	-37.70	-27.22	-37.28	-25.46	-178.62
1.8	-21.22	-150.56	18.05	-45.99	-27.17	-43.48	-23.37	177.38
1.9	-20.46	-141.99	18.01	-54.16	-27.16	-49.67	-21.56	173.19
2.0	-19.37	-136.18	18.01	-62.25	-27.18	-55.86	-19.93	168.70
2.1	-18.17	-133.02	18.04	-70.28	-27.22	-62.08	-18.42	163.85
2.2	-16.98	-131.95	18.09	-78.29	-27.30	-68.34	-17.00	158.61
2.3	-15.86	-132.43	18.16	-86.29	-27.42	-74.67	-15.66	152.97
2.4	-14.82	-134.07	18.26	-94.33	-27.56	-81.10	-14.38	146.93
2.5	-13.85	-136.59	18.37	-102.41	-27.75	-87.65	-13.16	140.50
2.6	-12.96	-139.82	18.50	-110.56	-27.98	-94.34	-11.99	133.68
2.7	-12.14	-143.64	18.64	-118.81	-28.27	-101.20	-10.88	126.50
2.8	-11.39	-147.97	18.78	-127.18	-28.61	-108.26	-9.81	118.95
2.9	-10.69	-152.76	18.92	-135.68	-29.02	-115.55	-8.80	111.05
3.0	-10.06	-157.97	19.06	-144.32	-29.52	-123.10	-7.84	102.80
3.1	-9.48	-163.59	19.20	-153.12	-30.12	-130.93	-6.93	94.23
3.2	-8.96	-169.58	19.31	-162.07	-30.84	-139.11	-6.08	85.35
3.3	-8.50	-175.91	19.41	-171.17	-31.72	-147.67	-5.29	76.17
3.4	-8.11	177.42	19.47	179.59	-32.77	-156.70	-4.57	66.73
3.5	-7.77	170.47	19.51	170.24	-34.06	-166.35	-3.91	57.07
3.6	-7.50	163.28	19.50	160.81	-35.66	-176.88	-3.32	47.23
3.7	-7.29	155.88	19.46	151.35	-37.66	171.13	-2.81	37.25
3.8	-7.14	148.34	19.37	141.90	-40.23	156.33	-2.37	27.20
3.9	-7.05	140.71	19.23	132.51	-43.53	135.06	-1.99	17.13
4.0	-7.02	133.03	19.05	123.24	-46.99	97.87	-1.69	7.10
4.1	-7.03	125.37	18.83	114.11	-47.01	45.50	-1.45	-2.86
4.2	-7.08	117.75	18.58	105.17	-43.87	10.27	-1.27	-12.69

Noise Parameters

Test conditions unless otherwise noted: V_{DD}=+5 V, I_{DD}=120 mA (typ.), Temp=+25°C, 50 Ω system

Freq (GHz)	NF_{min} (dB)	GammaOpt (mag)	GammaOpt (deg)	Rn (Ω)
1.5	0.50	0.07	4.37	3.50
1.6	0.47	0.06	19.31	3.18
1.7	0.46	0.07	37.40	3.22
1.8	0.48	0.05	32.41	3.47
1.9	0.47	0.06	66.76	3.15
2.0	0.47	0.06	74.72	3.28
2.1	0.50	0.06	68.71	3.46
2.2	0.53	0.06	96.07	3.20
2.3	0.55	0.07	122.98	3.12
2.4	0.59	0.26	40.10	5.04
2.5	0.58	0.09	152.96	3.11
2.6	0.59	0.09	172.99	2.90
2.7	0.61	0.10	170.84	3.08
2.8	0.62	0.14	-179.62	2.80
2.9	0.63	0.16	-162.35	2.80
3.0	0.65	0.17	-160.56	3.00
3.1	0.67	0.20	-168.07	2.57
3.2	0.68	0.23	-159.49	2.62
3.3	0.68	0.25	-145.84	2.83
3.4	0.71	0.27	-144.78	2.89
3.5	0.73	0.31	-134.10	3.67
3.6	0.73	0.28	-134.75	3.37
3.7	0.73	0.31	-122.22	4.03
3.8	0.76	0.40	-106.08	7.09
3.9	0.77	0.45	-123.38	3.37
4.0	0.79	0.42	-125.62	3.60

TQL9093-PCB Evaluation Board

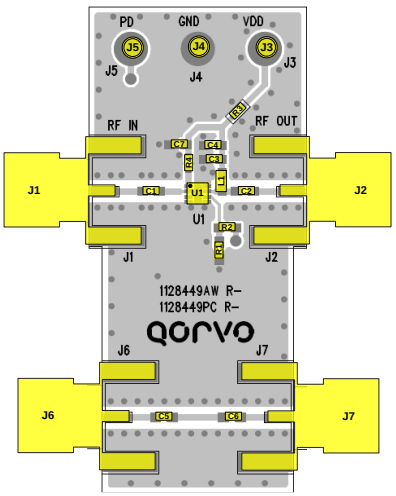

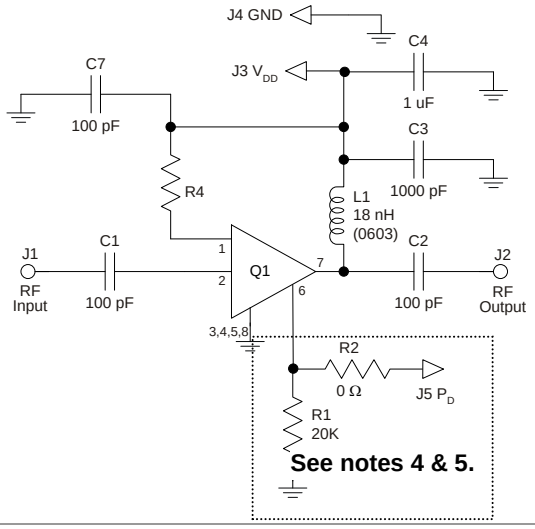

Notes:

1. See Evaluation Board PCB Information section for material and stack-up.
2. R3 (0 Ω jumper) is not shown on the schematic and may be replaced with copper trace in the target application layout.
3. All components are of 0402 size unless stated on the schematic.
4. For TDD Applications: R1 = 20K & R2 = 0Ω
5. For FDD Applications: R1 = 20K 'OR' Pin 6 tied to ground. R2 = DNP/Omitted
6. A through line is included on the evaluation board to de-embed the board losses.
7. R4 sets the current draw. Can be changed for the desired bias point. See table below.

Bill of Material – TQL9093-PCB

Reference Des.	Value	Description	Manuf.	Part Number
-	-	Printed Circuit Board	Qorvo	
U1	-	AMP, Ultra-Low Noise, Flat Gain LNA	Qorvo	TQL9093
R4	3 K	RES, 3 K, 5%, 1/16W, 0402	various	
R1	20 K	RES, 20 K, 5%, 1/16W, 0402	various	
R2, 3	0 Ω	RES, 0 Ω, 5%, 1/16W, 0402	various	
L1	18 nH	IND, 18 nH, 5%, 0603	Coilcraft	0603CS-18NXJL
C4	1.0 µF	CAP, 1.0 µF, 10%, 10V, X5R, 0402	various	
C1, C2, C5, C6	100 pF	CAP, 100 pF, 5%, 50V, NPO/C9G, 0402	various	
C3	1000 pF	CAP, 1000 pF, 0402	various	

R4 Resistor Values for Various I_{DD} settings

I_{DD} (mA)	80	90	100	110	120	130	140	150
R4	9.2K	6.5K	5.1K	3.9K	3.1K	2.6K	2.2K	1.8K

Typical Performance – TQL9093-PCB

Test conditions unless otherwise noted: V_{DD} = +5 V, I_{DD} = 120 mA (typ.), Temp = +25°C

Parameter	Conditions	Typical Values						Units
Frequency		600	900	1950	2600	3500	4200	MHz
Gain		23.4	21.6	19.4	19.9	20.9	19.6	dB
Input Return Loss		8.1	10.8	16.5	14	11.5	9.7	dB
Output Return Loss		13.4	20	23	14.5	7.6	6.7	dB
Output P1dB		+16.1	+17.6	+22.2	+21.7	+22	+21.8	dBm
OIP3	Pout=+5 dBm/tone, Δf=1 MHz	+37.2(2)	+42.8	+41.5	+41.5	+41.6	+39.7	dBm
Noise figure (1)		0.52	0.54	0.54	0.67	0.67	0.91	dB

Note:
1. Noise figure data has input trace loss deducted.
2. Pout=+3 dBm/tone, Δf=1 MHz

Performance Plots – TQL9093-PCB

Test conditions unless otherwise noted: V_{DD} = +5 V, I_{DD} = 120mA, Temp = +25°C. Noise figure data has input trace loss deducted.

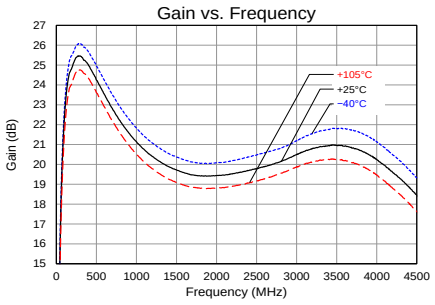

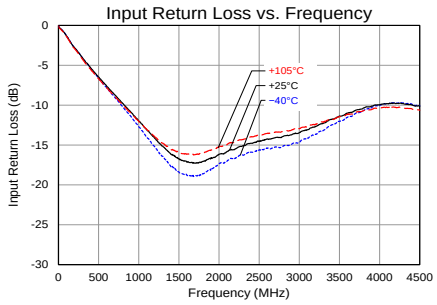

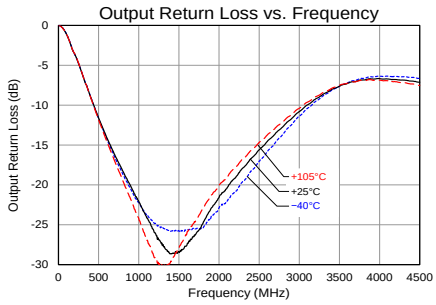

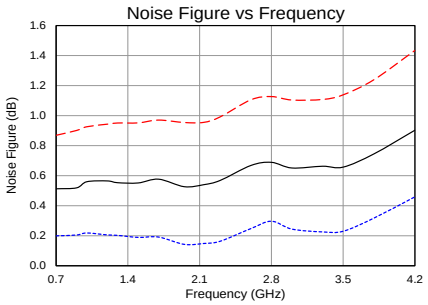

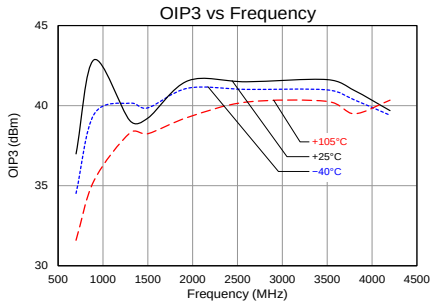

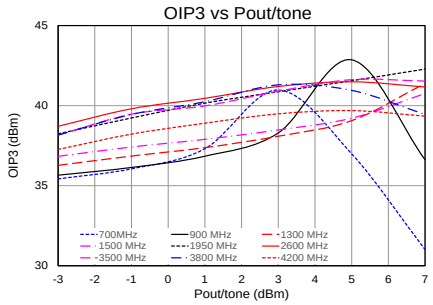

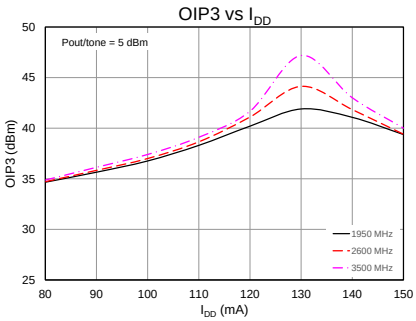

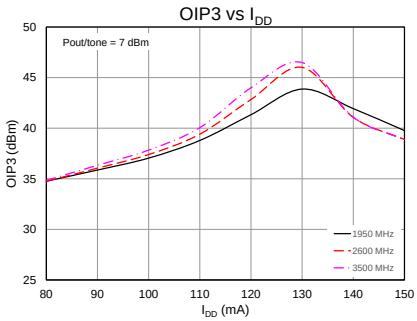

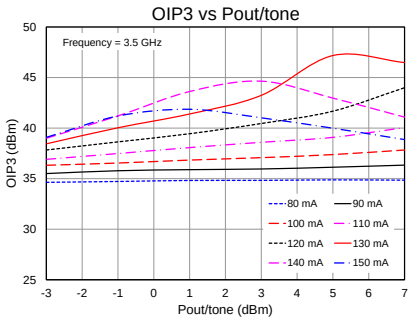

Performance Plots – TQL9093-PCB

Test conditions unless otherwise noted: V_{DD} = +5 V, Temp = +25°C.

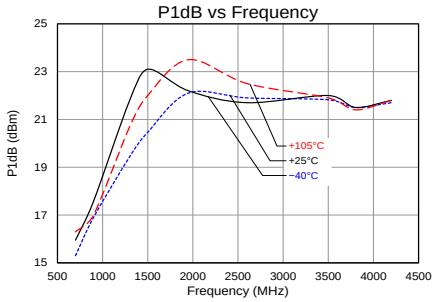

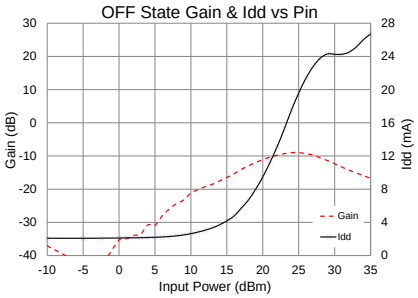

Pin Configuration and Description

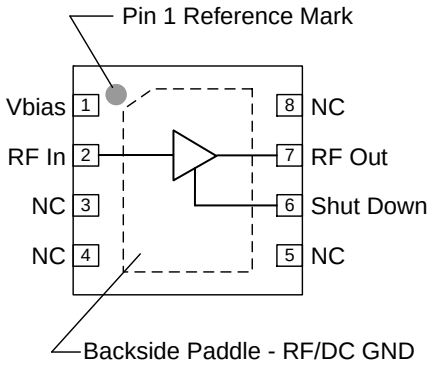

Pin No.	Label	Description
1	Vbias	Sets the I_{DD} bias point for the device.
2	RF In	RF Input pin. DC Block is required.
6	Shut Down	A voltage ≥1.17V turns off the device. If the pin is pulled to ground or driven with a voltage ≤0.63V, then the device will operate under LNA ON state.
7	RF Out	RF Output pin. DC Block is required. This is also a DC supply Input pin. A RF choke or inductor is required for operation.
3, 4, 5, 8	NC	No electrical connection. Provide grounded land pads for PCB mounting integrity.
Backside Paddle	RF/DC GND	RF/DC ground. Use recommended via pattern to minimize inductance and thermal resistance; see PCB Mounting Pattern for suggested footprint.

Evaluation Board PCB Information

Qorvo PCB 1128449 Material and Stack-up

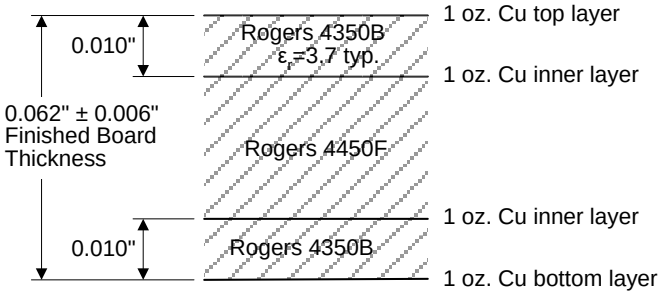

50 Ω line dimensions: width = 0.020”, spacing = 0.032”

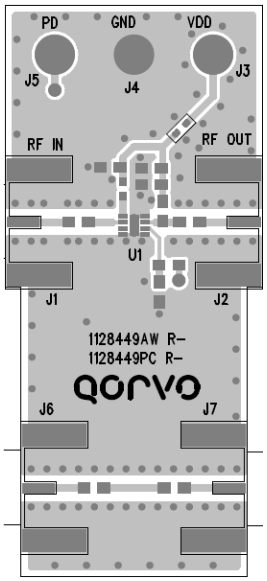

Package Marking and Dimensions

Marking: ● – Pin 1 Marker
9093 – Part Number
XXXX – Lot Code

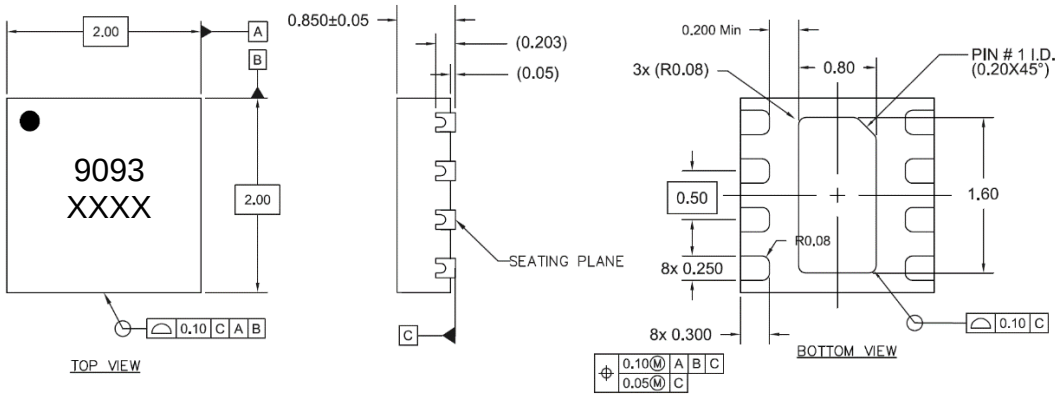

Notes:
1. All dimensions are in millimeters. Angles are in degrees.
2. Except where noted, this part outline conforms to JEDEC standard MO-220, Issue E (Variation VCCD) for thermally enhanced plastic very thin fine pitch quad flat no lead package (QFN).
3. Dimension and tolerance formats conform to ASME Y14.4M-1994.
4. The terminal #1 identifier and terminal numbering conform to JESD 95-1 SPP-012.

PCB Mounting Pattern

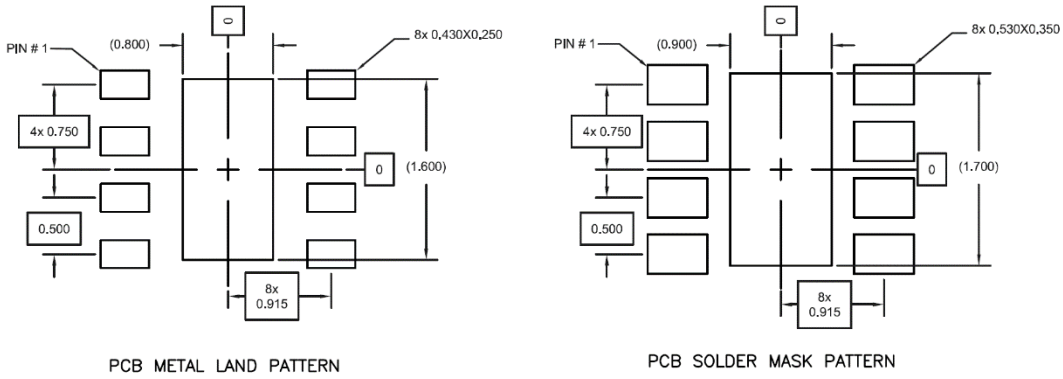

Notes:
1. All dimensions are in millimeters. Angles are in degrees.
2. Use 1 oz. copper minimum for top and bottom layer metal.
3. Minimum 3 via holes are required under the backside paddle of this device for proper RF/DC grounding and thermal dissipation. We recommend a 0.35mm (#80/.0135") diameter bit for drilling via holes and a final plated thru diameter of 0.25 mm (0.010").
4. Ensure good package backside paddle solder attach for reliable operation and best electrical performance.

Tape and Reel Information – Carrier and Cover Tape Dimensions

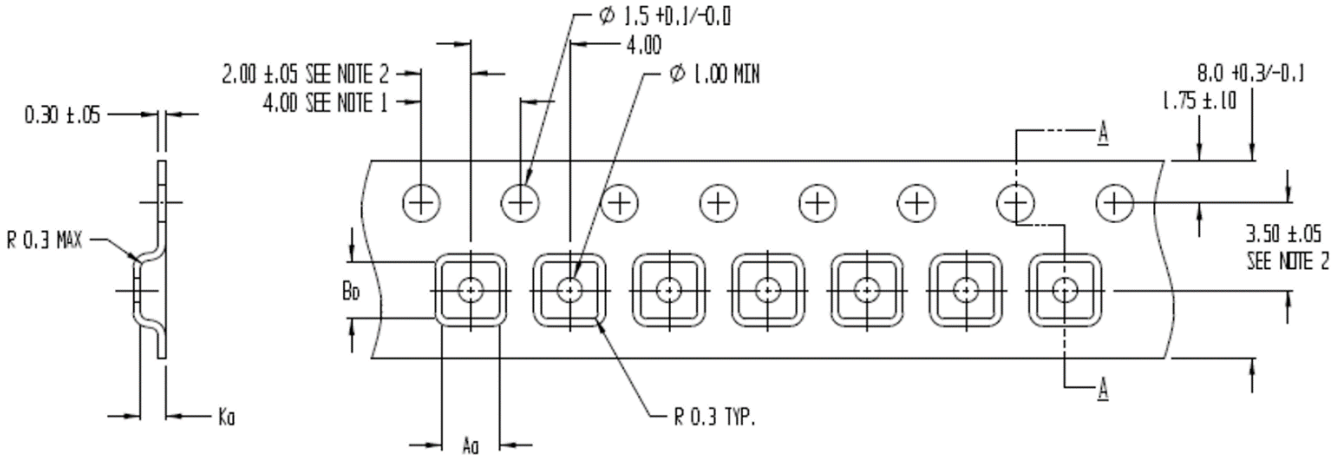

Feature	Measure	Symbol	Size (in)	Size (mm)
Cavity	Length	A0	0.091	2.30
	Width	B0	0.091	2.30
	Depth	K0	0.039	1.30
	Pitch	P1	0.157	4.00
Centerline Distance	Cavity to Perforation - Length Direction	P2	0.079	2.00
	Cavity to Perforation - Width Direction	F	0.138	3.50
Cover Tape	Width (Reference Only)	C	0.213	5.40
Carrier Tape	Width	W	0.315	8.00

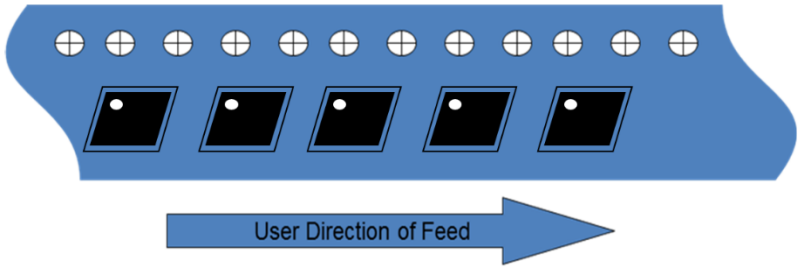

Tape and Reel Information – Reel Dimensions

Standard T/R size = 2,500 pieces on a 7” reel.

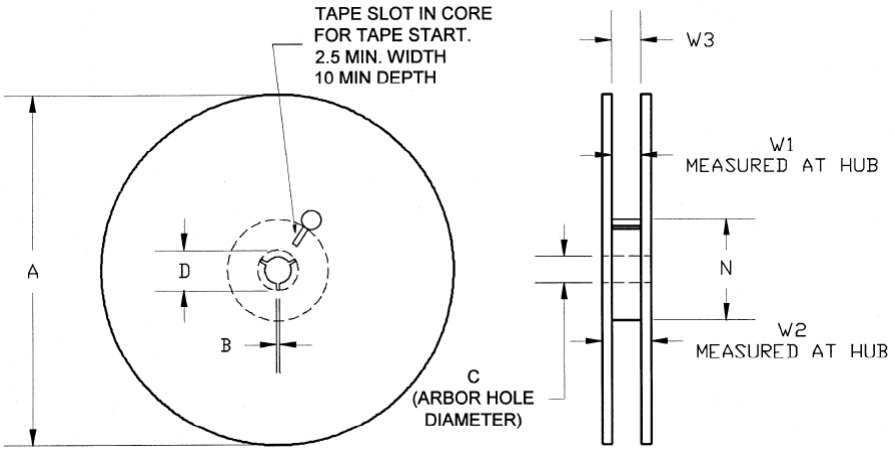

Feature	Measure	Symbol	Size (in)	Size (mm)
Flange	Diameter	A	6.969	177.00
	Thickness	W2	0.559	14.20
	Space Between Flange	W1	0.346	8.80
Hub	Outer Diameter	N	2.283	58.00
	Arbor Hole Diameter	C	0.512	13.00
	Key Slit Width	B	0.079	2.00
	Key Slit Diameter	D	0.787	20.00

Tape and Reel Information – Tape Length and Label Placement

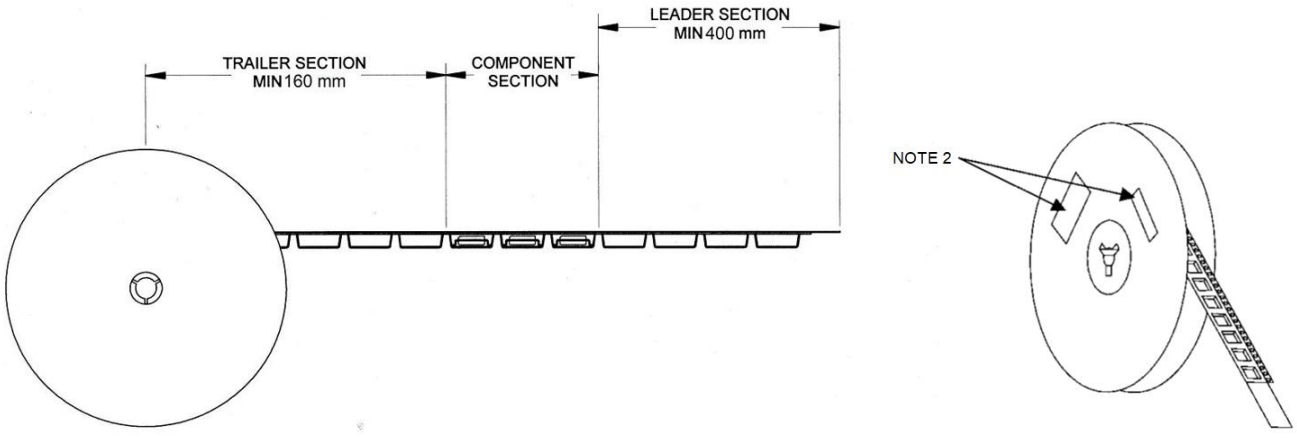

Notes:
1. Empty part cavities at the trailing and leading ends are sealed with cover tape. See EIA 481-1-A.
2. Labels are placed on the flange opposite the sprockets in the carrier tape.

Handling Precautions

Parameter	Rating	Standard
ESD – Human Body Model (HBM)	Class 1B	ESDA / JEDEC JS-001-2014
ESD – Charged Device Model (CDM)	Class C3	ESDA / JEDEC JS-002-2014
MSL – Moisture Sensitivity Level	Level 1	IPC/JEDEC J-STD-020



Caution!
ESD-Sensitive Device

Solderability

Compatible with lead-free (260°C max. reflow temp.) soldering process.
Solder profiles available upon request.

Contact plating: NiPdAu *(Thickness: Ni 0.508 ~1.524 µm; Pd 0.023 ~ 0.1016 µm; Au 0.00254 ~ 0.01016 µm)*

RoHS Compliance

This part is compliant with 2011/65/EU RoHS directive (Restrictions on the Use of Certain Hazardous Substances in Electrical and Electronic Equipment) as amended by Directive 2015/863/EU.

This product also has the following attributes:

- Lead Free
- Halogen Free (Chlorine, Bromine)
- Antimony Free
- TBBP-A ($C_{15}H_{12}Br_4O_2$) Free
- PFOS Free
- SVHC Free



Contact Information

For the latest specifications, additional product information, worldwide sales and distribution locations:

Web: www.qorvo.com
Tel: **1-844-890-8163**
Email: customer.support@qorvo.com

Important Notice

The information contained herein is believed to be reliable; however, Qorvo makes no warranties regarding the information contained herein and assumes no responsibility or liability whatsoever for the use of the information contained herein. All information contained herein is subject to change without notice. Customers should obtain and verify the latest relevant information before placing orders for Qorvo products. The information contained herein or any use of such information does not grant, explicitly or implicitly, to any party any patent rights, licenses, or any other intellectual property rights, whether with regard to such information itself or anything described by such information. **THIS INFORMATION DOES NOT CONSTITUTE A WARRANTY WITH RESPECT TO THE PRODUCTS DESCRIBED HEREIN, AND QORVO HEREBY DISCLAIMS ANY AND ALL WARRANTIES WITH RESPECT TO SUCH PRODUCTS WHETHER EXPRESS OR IMPLIED BY LAW, COURSE OF DEALING, COURSE OF PERFORMANCE, USAGE OF TRADE OR OTHERWISE, INCLUDING THE IMPLIED WARRANTIES OF MERCHANTABILITY AND FITNESS FOR A PARTICULAR PURPOSE.**

Without limiting the generality of the foregoing, Qorvo products are not warranted or authorized for use as critical components in medical, life-saving, or life-sustaining applications, or other applications where a failure would reasonably be expected to cause severe personal injury or death.

Copyright 2024 © Qorvo, Inc. | Qorvo is a registered trademark of Qorvo, Inc.