TQP369181

DC – 6 GHz Gain Block

Product Overview

The TQP369181 is a general-purpose buffer amplifier that offers high dynamic range in a low-cost surface-mount package. At 1900 MHz, the amplifier typically provides 15.3 dB Gain, +29 dBm OIP3 with 3.6 dB Noise Figure while drawing 45 mA current. The device combines dependable performance with consistent quality to maintain MTTF exceeding 100 years at mounted surface temperatures of +85°C. The device is housed in a lead-free, Green and RoHS-compliant industry standard SOT-363 package.

The TQP369181 consists of a Darlington-pair amplifier using the high reliability InGap / GaAs HBT process technology. Only DC-blocking capacitors, a bias resistor, and an inductive RF choke are required for operation.

The broadband TQP369181 MMIC amplifier can be directly applied to various current and next generation wireless technologies such as CDMA, WCDMA and LTE. In addition, the TQP369181 will work for other various applications within the DC to 6 GHz frequency range.



SOT-363 Package

Key Features

- DC – 6000 MHz
- Flat, Broadband Frequency Response
- +15.3 dB Gain at 1900 MHz
- 3.6 dB Noise Figure at 1900MHz
- +29 dBm Output IP3 at 1900 MHz
- +14.4 dBm P1dB at 1900 MHz
- 50 Ω Cascadable Gain Block
- Single Voltage Supply, 45 mA Current

Functional Block Diagram

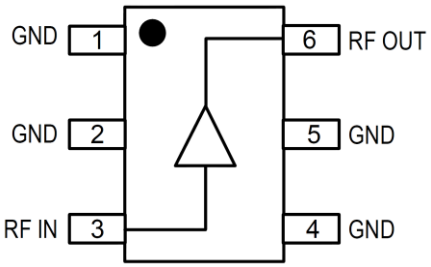

Top View

Applications

- Wireless Infrastructure
- CATV / SATV / MoCA
- Point to Point
- Defense & Aerospace
- Test & Measurement Equipment
- General Purpose Wireless

Pin Configuration

Pin No.	Function
3	RF Input
6	RF Output / Bias
1, 2, 4, 5	Ground

Ordering Information

Part No.	Description
TQP369181	3,000 pieces on a 7” reel (standard)
TQP369181-PCB	500 - 6000 MHz Evaluation Board

Absolute Maximum Ratings

Parameter	Rating
Storage Temperature	−55 °C to +150 °C
RF Input Power, CW, 50 Ω, T=25 °C	+27 dBm
Device Voltage ($V_{DEVICE-PIN\ 6}$)	+5.2 V

Exceeding any one or a combination of the Absolute Maximum Rating conditions may cause permanent damage to the device. Extended application of Absolute Maximum Rating conditions to the device may reduce device reliability.

Recommended Operating Conditions

Parameter	Min	Typ	Max	Units
T_{CASE}	−40		+85	°C
T_J for 10^6 hours MTTF			+160	°C

Electrical specifications are measured at specified test conditions. Specifications are not guaranteed over all recommended operating conditions.

Electrical Specifications

Test condition unless otherwise noted: I_{CC} = 45 mA, T_{CASE} = +25°C, 50 Ω system

Parameter	Conditions (1)	Min	Typ	Max	Units
Operational Frequency Range		DC		6000	MHz
Test Frequency			1900		MHz
Gain		13.8	15.3	16.8	dB
Input Return Loss			30		dB
Output Return Loss			24		dB
Output P1dB			+14.6		dBm
Output IP3	Pout = 0 dBm/tone, Δf = 1 MHz	+26.0	+29.0		dBm
Noise Figure			3.0		dB
Device Voltage	$V_{DEVICE-PIN\ 6}$	3.0	3.9	4.5	V
Device Current			45		mA
Thermal Resistance, θ_{jc}	Junction to case (1)		226		°C/W

Notes:
1. Thermal path is from the device junction through the package ground tab (pins 2, 4) to the backside mounting surface

S-Parameters

Test Conditions: $V_{DEVICE-Pin\ 6,}$ =+3.9 V (typ.), I_{CC}=45 mA (typ.), T_{CASE}=+25 °C, 50 Ω system, calibrated to device leads

Freq (GHz)	S11 (dB)	S11 (ang)	S21 (dB)	S21 (ang)	S12 (dB)	S12 (ang)	S22 (dB)	S22 (ang)
10	-36.7	-179.3	15.9	179.7	-18.8	0.3	-30.2	14.8
20	-35.9	178.4	15.9	179.3	-18.8	-0.1	-30.0	5.6
50	-34.6	171.4	15.9	178.5	-18.8	-0.3	-30.8	0.4
100	-34.1	164.0	15.9	177.2	-18.8	-0.7	-31.2	-5.2
200	-32.6	153.3	15.9	174.6	-18.9	-0.9	-30.7	-10.9
500	-30.6	137.1	15.8	167.0	-18.9	-2.6	-32.3	-16.0
900	-29.1	115.5	15.6	157.3	-19.0	-3.8	-33.1	-59.1
1000	-29.1	118.6	15.6	154.9	-19.0	-4.1	-32.0	-59.5
1500	-27.9	74.3	15.3	143.1	-19.1	-6.1	-28.2	-75.7
1900	-26.7	28.5	15.1	133.6	-19.4	-7.5	-22.9	-63.3
2000	-24.9	17.8	15.0	131.3	-19.4	-8.0	-21.7	-64.4
2500	-18.2	-18.4	14.6	120.4	-19.7	-9.8	-16.6	-62.9
3000	-14.4	-24.2	14.2	110.1	-20.2	-11.3	-14.0	-57.5
3500	-13.1	-26.3	13.8	100.4	-20.5	-13.1	-12.9	-54.0
4000	-13.1	-26.2	13.5	91.2	-20.8	-12.4	-13.7	-50.2
4500	-15.0	-20.5	13.3	81.7	-21.2	-14.4	-16.5	-41.9
5000	-19.1	0.7	13.1	71.2	-21.7	-15.9	-24.0	0.6
5500	-20.6	60.7	12.9	60.7	-22.4	-17.4	-18.9	84.1
6000	-17.1	100.0	12.6	48.8	-23.2	-18.4	-13.5	105.3

Notes:

1. Measured on TQP369181-PCB with L1 removed and C2, C3 replaced with 0Ω resistors
2. Bias applied to device output via internal network analyzer wide-band bias tee
3. SOLT ECal at network analyzer test cable ends
4. Input and output reference planes extended to the device leads

Evaluation Board – TQP369181-PCB

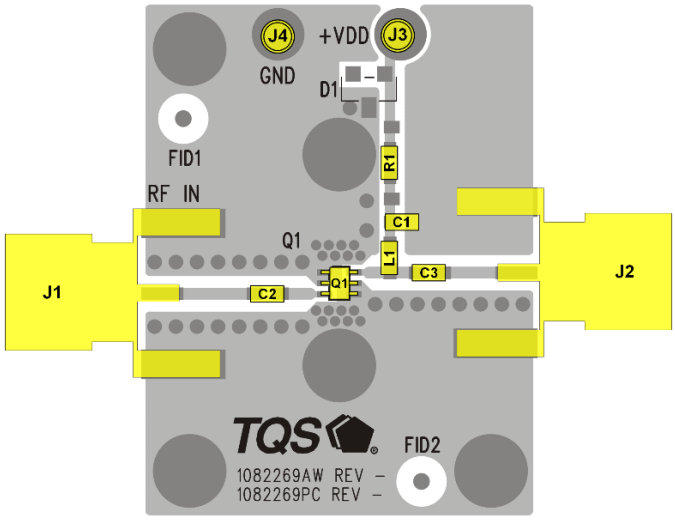

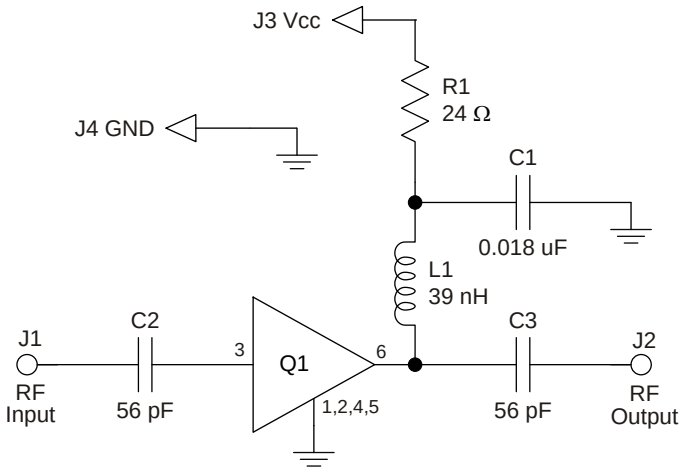

Bill of Material – TQP369181-PCB

Reference Des.	Value	Description	Manuf.	Part Number
-	-	Printed Circuit Board	Qorvo	
Q1	-	AMP, High Linearity Gain Block	Qorvo	TQP369181G
C1	0.018 µF	CAP, 0.018 µF, 10%, 16V, X7R, 0603	various	
C2, C3	56 pF	CAP, 56 pF, 5%, NPO, 0603	various	
L1	39 nH	IND, 39 nH, 5% Wire wound, 0603	Coilcraft	0603CS-39NXJL
R1	24 Ω	RES, 24 Ω, 5%, 1/10 W, 0603	various	

Component Values for Specific Frequencies

Frequency	50 MHz	500 MHz	900 MHz	1900 MHz	2200 MHz	2500 MHz	3500 MHz
L1	820 nH	220 nH	68 nH	27 nH	22 nH	18 nH	15 nH
C2, C3	.018 µF	1000 pF	100 pF	68 pF	68 pF	56 pF	39 pF

Bias Resistor Values for Specific Supply Voltages

$V_{CC, SUPPLY}$	5 V	6 V	7 V	8 V	9 V	10 V	12 V
R1	24 Ω	47 Ω	68 Ω	91 Ω	110 Ω	130 Ω	180 Ω
Component Size	0805	1206	1210	1210	1210	2010	2100

Notes: The R1 is for bias and its stability over temperature. The minimum $V_{CC\text{-}SUPPLY}$ is +5 V. An 1% tolerance resistor is recommended.

Typical Performance – TQP369181-PCB

Test conditions unless otherwise noted: $V_{CC-SUPPLY}$ =+5 V, R_1 = 24 Ω, I_{CC} = 45 mA, T_{CASE} = +25°C

Parameter	Typical									Units
Frequency	500	900	1900	2100	2600	3500	4000	5000	6000	MHz
Gain	15.6	15.6	15.3	15.0	14.7	13.8	13.5	13.1	12.6	dB
Input Return Loss	17	26	30	24	17	13	13	19	17	dB
Output Return Loss	16	24	24	20	16	13	14	24	14	dB
Output P1dB	+15.4	+15.2	+14.6	+14.3	+14.4	+13.9	+13.0	+12.1	+8.8	dBm
Output IP3 (1)	+30.6	+30.0	+29.0	+28.5	+27.7	+26.3	+25.3	+22.0	+22.2	dBm
Noise Figure	3.6	3.6	3.6	3.6	3.7	4.0	4.0	4.0	4.4	dB

Notes:
1. The OIP3 measured with two tones at an output power of 0 dBm / tone separated by 1 MHz

Performance Plots, TQP369181-PCB

Test conditions unless otherwise stated: $V_{CC-SUPLLY}$ = +5 V, R1 = 24 Ω, I_{CC} = 45 mA, T_{CASE} = 25 ºC, 50 Ω system

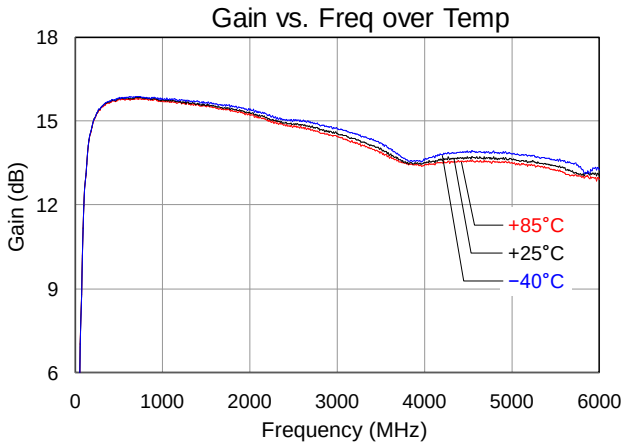

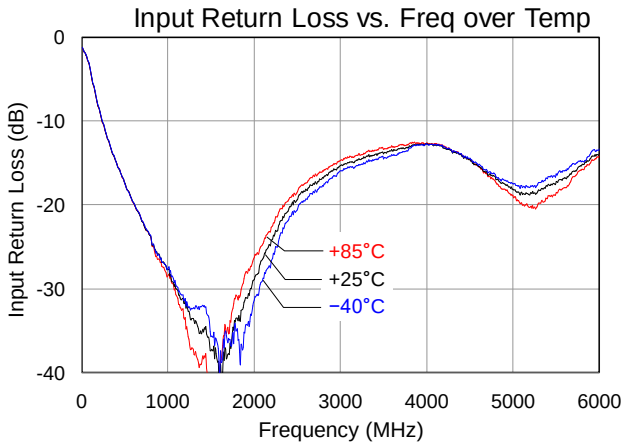

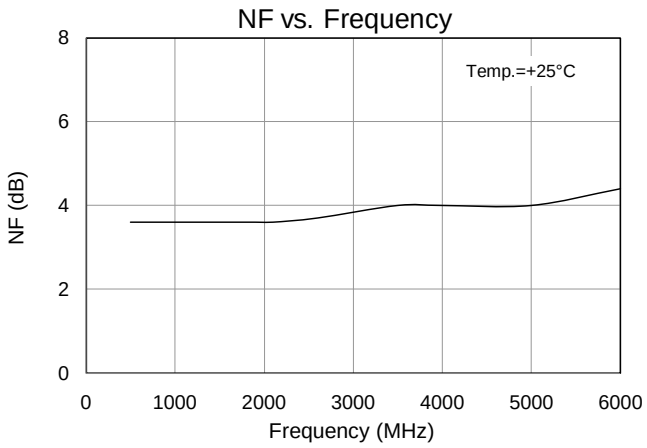

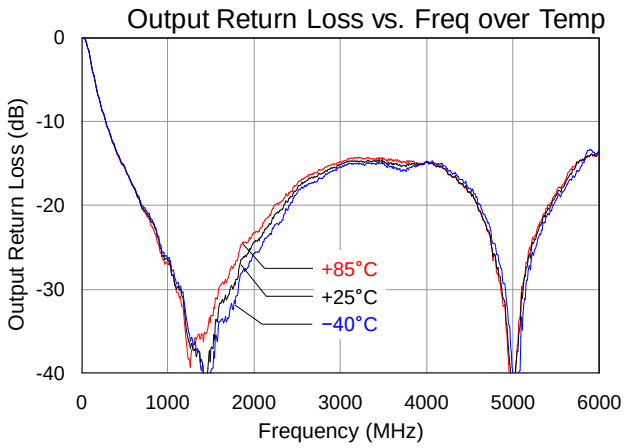

Performance Plots, TQP369181-PCB (continued)

Test conditions unless otherwise noted: Supply Voltage $V_{CC-SUPLLY}$ = +5 V, R1 = 24 Ω, I_{CC} = 45 mA, T_{CASE} = +25 °C, 50 Ω system

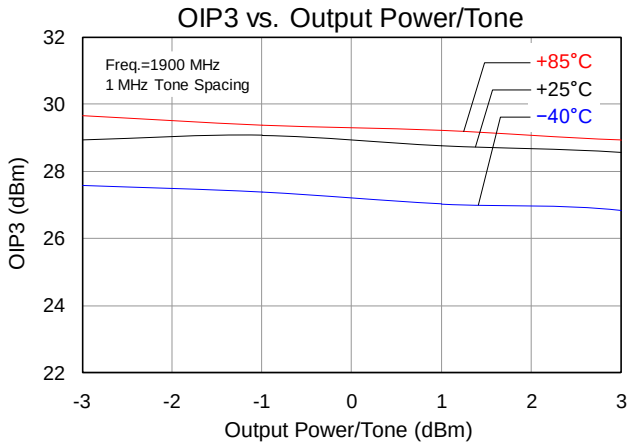

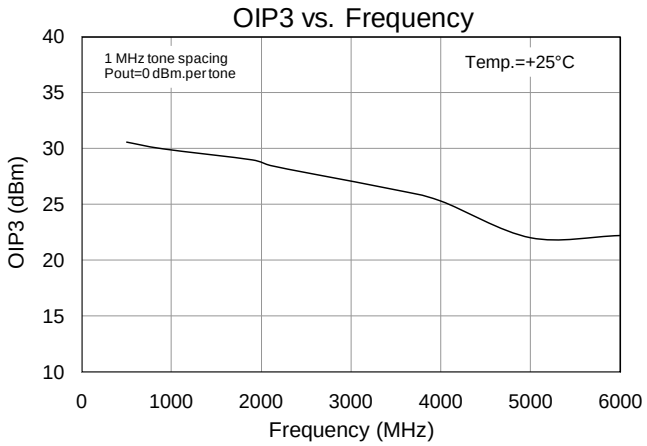

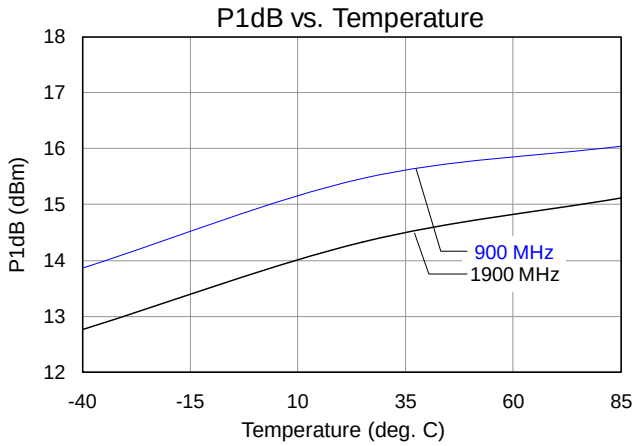

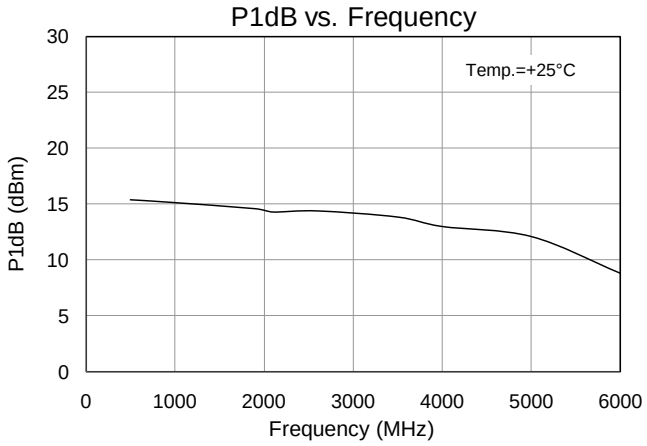

Pin Configuration and Description

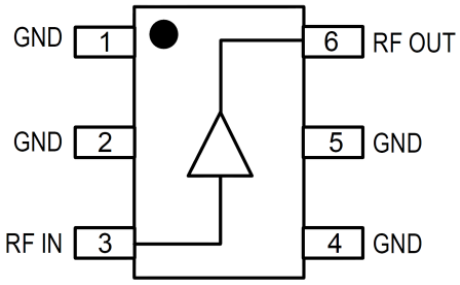

Pin No.	Label	Description
3	RF IN	RF input, matched to 50 Ohms. External DC Block is required.
6	RF OUT	RF output / DC supply, matched to 50 Ohms. External DC Block, bias choke, and dropping resistor is required.
1, 2, 4, 5	GND	RF/DC ground. Use recommended via pattern to minimize inductance and thermal resistance. See PCB Mounting Pattern for suggested footprint.

Evaluation Board PCB Information

Qorvo PCB 1082269 Material and Stack-up

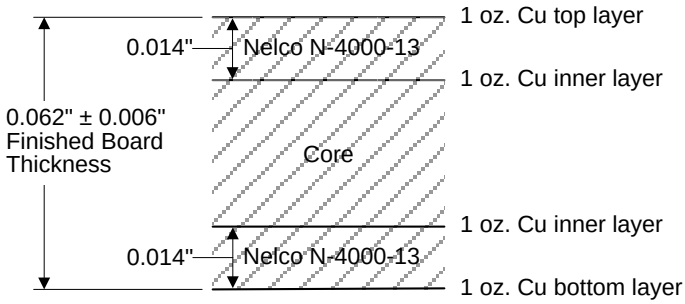

50 Ohm Line Dimensions: Width = 0.029"
Spacing=0.035"

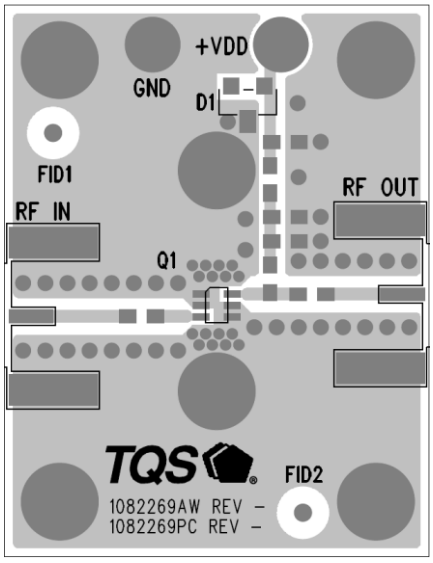

Package Marking and Dimensions

Marking: Top – 181
Bottom – XXX, Alphanumeric Lot Code

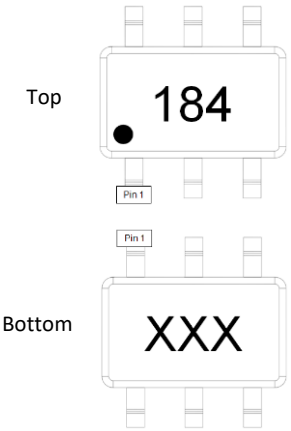

SYMBOL	MIN	MAX
A	-	1.10 (0.043)
A1	0	0.10 (0.004)
A2	0.70 (0.028)	1.00 (0.039)
D	2.00 (0.079 BASIC	
E	2.10 (0.083) BASIC	
E1	1.25 (0.049) BASIC	
L	0.21 (0.008)	0.41 (0.016)
L1	0.42 (0.017) REF	
L2	0.15 (0.006) BASIC	
?	0`8	8`8
?1	4`8	12`8
b	0.15 (0.006)	0.30 (0.012)
c	0.08 (0.003)	0.22 (0.009)
e	0.65 (0.026) BASIC	
e1	1.30 (0.051) BASIC	

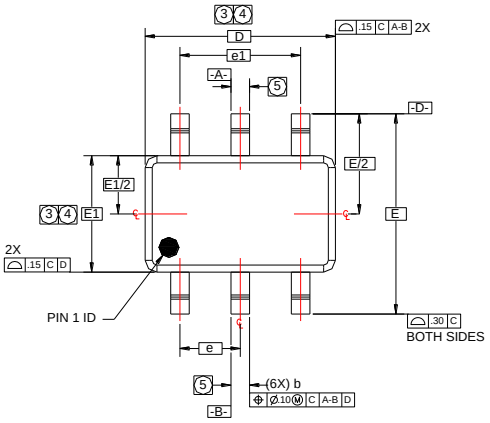

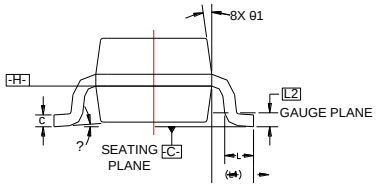

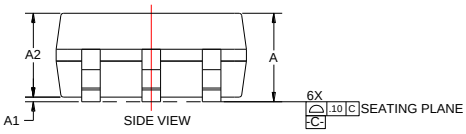

Notes:
1. All dimensions are in millimeters with (inches). Angles are in degrees.
2. Dimensions and tolerances per ASME Y14.5M-1194. Package conforms to JEDEC MO-203, Issue B

PCB Mounting Land Pattern

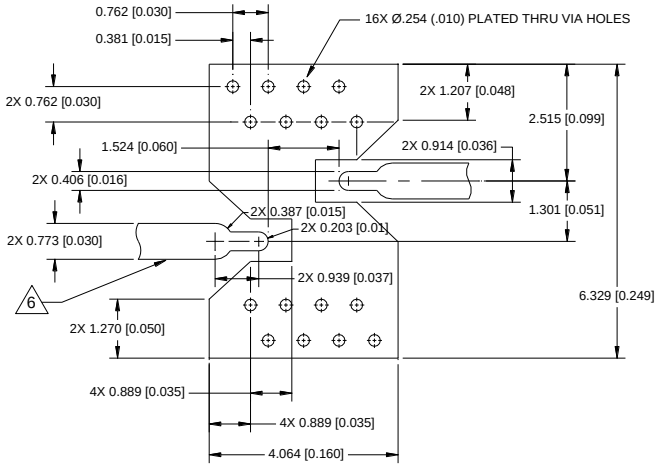

Notes:
1. All dimensions are in millimeters(inches). Angles are in degrees.
2. Use 1 oz. copper minimum for top and bottom layer metal.
3. Vias are required under the backside paddle of this device for proper RF/DC grounding and thermal dissipation.
4. Do not remove or minimize via hole structure in the PCB. Thermal and RF grounding is critical.
5. We recommend a 0.35mm (#80/.0135") diameter bit for drilling via holes and a final plated thru diameter of 0.25 mm (0.010").
6. The RF I/O trace transition shown is to a 30 mil wide line. Modify transition as required to interface with other line widths.

Tape and Reel Information – Carrier and Cover Tape Dimensions

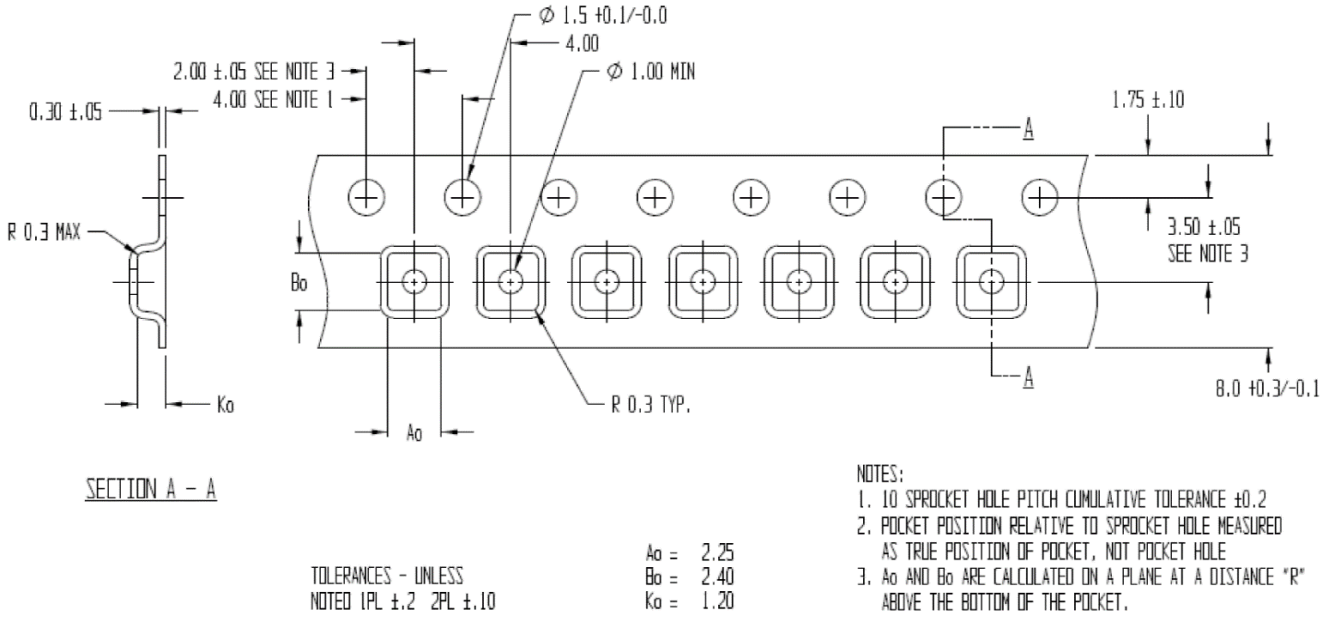

Feature	Measure	Symbol	Size (in)	Size (mm)
Cavity	Length	A0	0.088	2.25
	Width	B0	0.094	2.40
	Depth	K0	0.047	1.20
	Pitch	P1	0.157	4.00
Centerline Distance	Cavity to Perforation - Length Direction	P2	0.079	2.00
	Cavity to Perforation - Width Direction	F	0.138	3.50
Cover Tape	Width (Reference Only)	C	0.213	5.40
Carrier Tape	Width	W	0.315	8.00

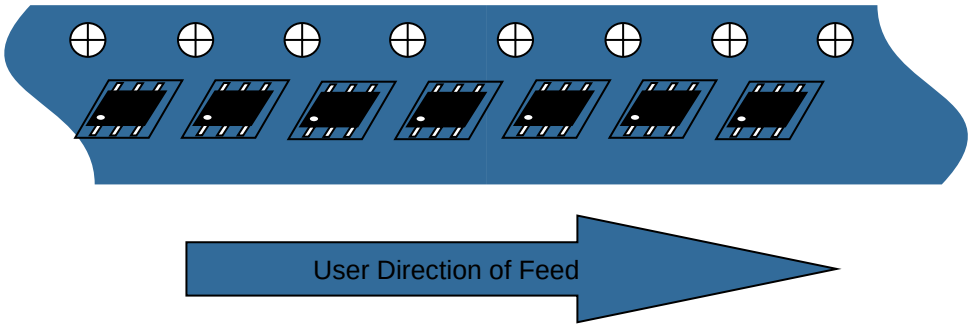

Tape and Reel Information – Reel Dimensions

Standard T/R size = 3,000 pieces on a 7” reel.

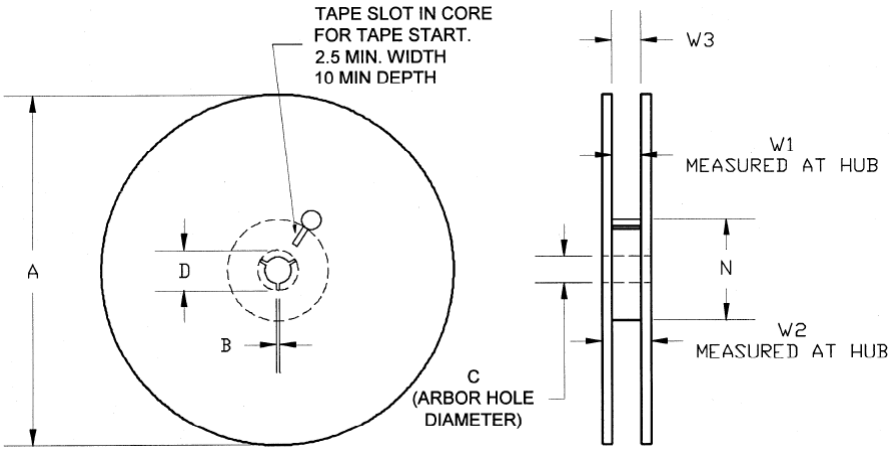

Feature	Measure	Symbol	Size (in)	Size (mm)
Flange	Diameter	A	6.969	177.0
	Thickness	W2	0.559	14.2
	Space Between Flange	W1	0.346	8.8
Hub	Outer Diameter	N	2.283	58.0
	Arbor Hole Diameter	C	0.512	13.0
	Key Slit Width	B	0.079	2.0
	Key Slit Diameter	D	0.787	20.0

Tape and Reel Information – Tape Length and Label Placement

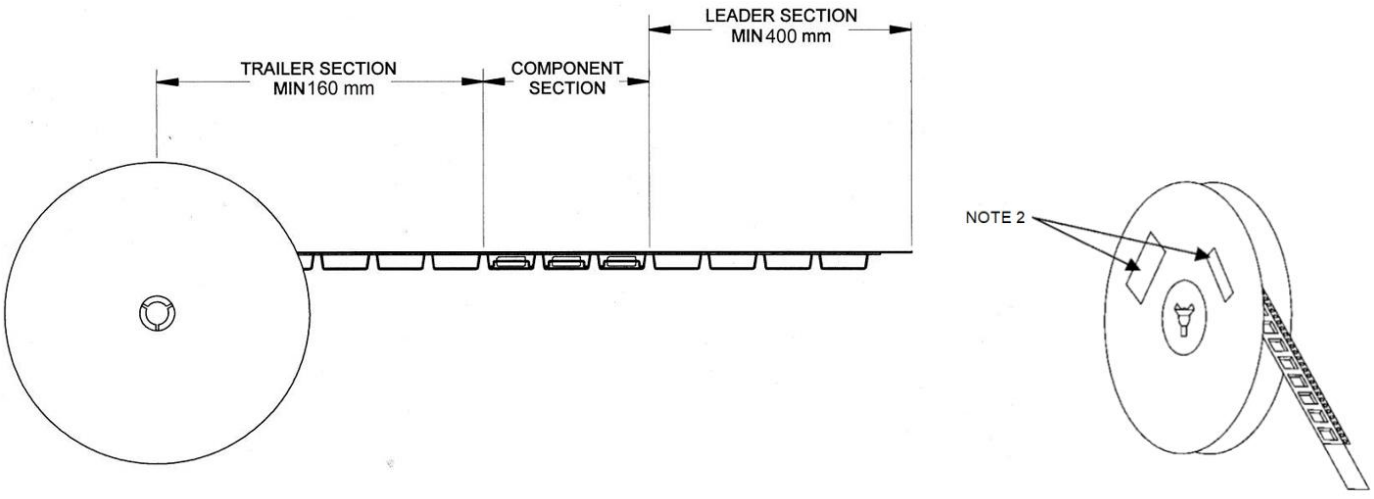

Notes:
1. Empty part cavities at the trailing and leading ends are sealed with cover tape. See EIA 481-1-A.
2. Labels are placed on the flange opposite the sprockets in the carrier tape.

Handling Precautions

Parameter	Rating	Standard
ESD – Human Body Model (HBM)	Class 1C	ESDA / JEDEC JS-001-2012
ESD – Charged Device Model (CDM)	Class C3	JEDEC JESD22-C101F
MSL – Moisture Sensitivity Level	Level 1	IPC/JEDEC J-STD-020



Caution!
ESD-Sensitive Device

Solderability

Compatible with both lead-free (260°C max. reflow temp.) and tin/lead (245°C max. reflow temp.) soldering processes.
Solder profiles available upon request.

Contact plating: Matte Tin *(Thickness 8 ~ 20 µm)*

RoHS Compliance

This part is compliant with 2011/65/EU RoHS directive (Restrictions on the Use of Certain Hazardous Substances in Electrical and Electronic Equipment) as amended by Directive 2015/863/EU.

This product also has the following attributes:

- Lead Free
- Halogen Free (Chlorine, Bromine)
- Antimony Free
- TBBP-A ($C_{15}H_{12}Br_4O_2$) Free
- PFOS Free
- SVHC Free



Contact Information

For the latest specifications, additional product information, worldwide sales and distribution locations:

Web: www.qorvo.com

Tel: 1-844-890-8163

Email: customer.support@qorvo.com

Important Notice

The information contained herein is believed to be reliable; however, Qorvo makes no warranties regarding the information contained herein and assumes no responsibility or liability whatsoever for the use of the information contained herein. All information contained herein is subject to change without notice. Customers should obtain and verify the latest relevant information before placing orders for Qorvo products. The information contained herein or any use of such information does not grant, explicitly or implicitly, to any party any patent rights, licenses, or any other intellectual property rights, whether with regard to such information itself or anything described by such information. **THIS INFORMATION DOES NOT CONSTITUTE A WARRANTY WITH RESPECT TO THE PRODUCTS DESCRIBED HEREIN, AND QORVO HEREBY DISCLAIMS ANY AND ALL WARRANTIES WITH RESPECT TO SUCH PRODUCTS WHETHER EXPRESS OR IMPLIED BY LAW, COURSE OF DEALING, COURSE OF PERFORMANCE, USAGE OF TRADE OR OTHERWISE, INCLUDING THE IMPLIED WARRANTIES OF MERCHANTABILITY AND FITNESS FOR A PARTICULAR PURPOSE.**

Without limiting the generality of the foregoing, Qorvo products are not warranted or authorized for use as critical components in medical, life-saving, or life-sustaining applications, or other applications where a failure would reasonably be expected to cause severe personal injury or death.

Copyright 2022 © Qorvo, Inc. | Qorvo is a registered trademark of Qorvo, Inc.