RIGHT ANGLE PLUG CRIMP TYPE
CABLE 2.6/75 S

R213.182.007
SERIES MCX 75

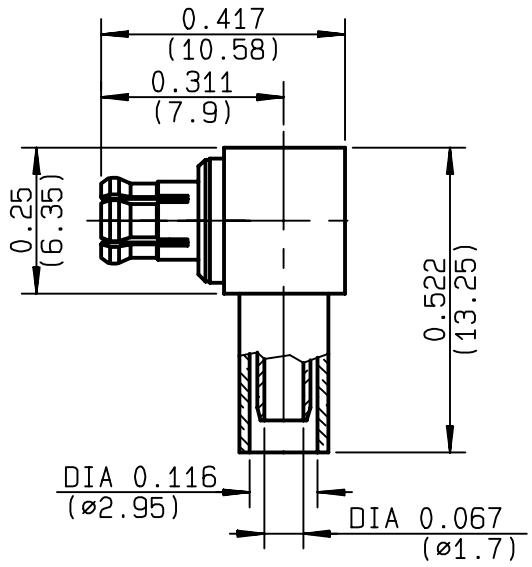

NOMINAL IMPEDANCE	**75**	Ω
FREQUENCY RANGE	**0-6**	GHz
TEMPERATURE RATING	**-55/+155**	°C
V.S.W.R	**1.05** + **.02** x F(GHz)Maxi	
RF INSERTION LOSS	**0.08** √F(GHz) dB Maxi	
VOLTAGE RATING	**335**	Veff Maxi
DIELECTRIC WITHSTANDING VOLTAGE	**750**	Veff Mini
INSULATION RESISTANCE	**1000**	MΩMini
HERMETIC SEAL	**NA**	Atm.cm³/s
LEAKAGE (pressurized only)	**NA**	
MECHANICAL DURABILITY	**500**	Cycles
WEIGHT	**1.85**	gr

SPECIFICATION

CABLES : **RG 179**
RG 187

OTHERS CHARACTERISTICS

CABLE RETENTION	**53**	N Mini
CENTER CONTACT RETENTION		
Axial force - mating end	**10**	N Mini
Axial force - opposite end	**10**	N Mini
Torque	**NA**	cm.N Mini
RECOMMENDED TORQUES		
Mating	**NA**	cm.N
Panel nut	**NA**	cm.N
Clamp nut	**NA**	cm.N

CONNECTOR PARTS	MATERIALS	FINISH (all values are given in micrometers)
BODY	BRASS	BBR 2
OUTER CONTACT	BERYLLIUM COPPER	BBR 2
CENTER CONTACT	BRASS	GOLD 1.3 OVER NICKEL 2
INSULATOR	PTFE	-
GASKET		-
OTHERS PIECES	BRASS	BBR 2

ISSUE	CREATION DATE	FILE PART-NUMBER
9916A02	23/08/1996	96-1200-002

AGRIODOS

RADIALL®

The information given here is subject to change without notice.
Design changes may be in order to improve the product .

Connect to the future

RADIALL®

R213.182.007

ISSUE 9916A02 SERIES MCX 75

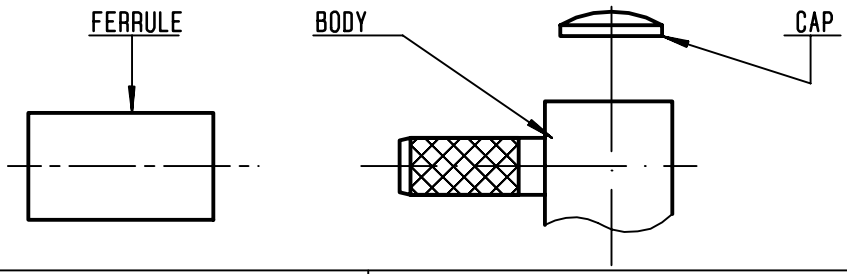

① Slide onto the cable the ferrule .
Strip the cable .
Tin cable inner conductor
-

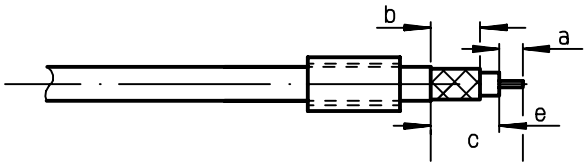

Stripping	a	b	c	d	e
inch	0.067	0.217	0.382	0	0.315
mm	1.7	5.5	9.7		8

② Fan the braid .
Push connector body under the braid .
Slide the ferrule on the braid
(in direction F)
-
-

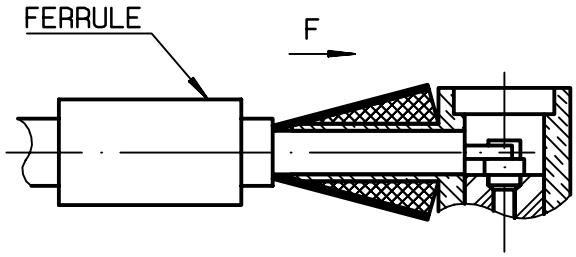

③ Crimp the ferrule with crimping tool
R282.211.000 (Hex. : 0.127) (3.25)
Solder inner conductor .

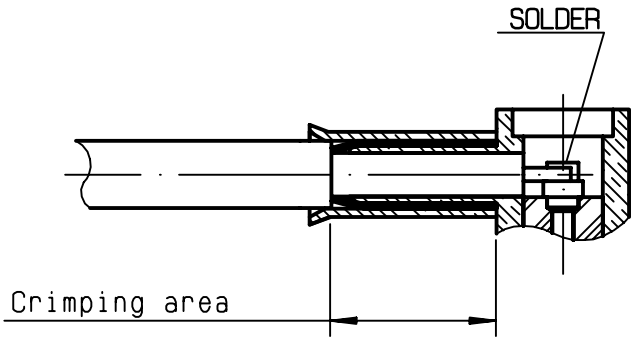

④ Place the cap .
Press cap flush or slightly below surface
of body assembly .
-
-

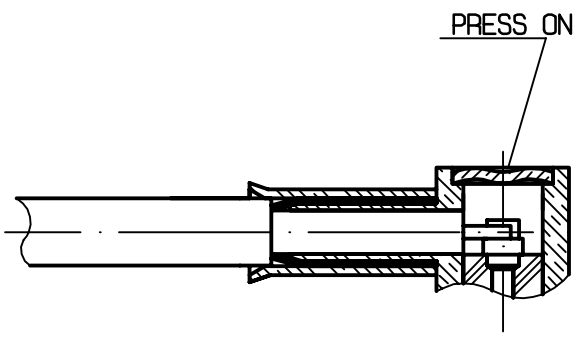

AGRIODOS

The information given here is subject to change without notice.Design changes may be in order to improve the product.