COAXIAL SPnT up to 40 GHz – RAMSES Concept

R57 . . . . . .

Models
3 : Without 50 Ω termination
4 : With 50 Ω termination

Connector RF
3 : **SMA** up to 3 GHz
4 : **SMA** up to 18 GHz
7 : **SMA 2.9** up to 26.5 GHz (4)
8 : **SMA 2.9** up to 40 GHz (4)
9 : **DIN 1.6/5.6** up to 1 GHz (4)

Type
0 : Normally open
1 : Normally open + I.C.
2 : Latching
3 : Latching + I.C.
4 : Latching + S. C. O.(1)(4)
5 : Latching + S. C. O. + I.C.(1)(4)
8 : Latching + S. C. O. +A.R.(1)
9 : Latching + S. C. O.+ I.C.+ A.R. (1)

Actuator voltage (2)
2 : 12 Vdc
3 : 28 Vdc

Actuator terminal
0 : Solder Pins
5 : DSUB

Options
0 : Without option
1 : Positive common (2)
2 : Compatible TTL driver(1)
3 : With suppression diodes
4 : With suppression diodes and positive common (2)
8 : BCD driver TTLcompatible(1)(3)

Number of positions
3 : 3 Positions
4 : 4 Positions
5 : 5 Positions
6 : 6 Positions
7 : 7 Positions
8 : 8 Positions
9 : 9 Positions
0 : 10 Positions
1 : 11 Positions
2 : 12 Positions

I.C. : *Indicator contact.*
S.C.O. : *Self Cut Off*
A.R. : *Automatic Reset*

(1) : *These models are already equiped with suppression diodes.*
(2) : *Standard products are equiped with common minus.*
(3) : *Latching BCD driver enables also a manual reset through driver code 0000.*
(4) : *Available only up to 6 positions, and without 50 Ohms termination*

- Latching models have a RESET pin which commands the reset of all positions. This command should be used before switching from one position to another. If not, two positions will be set at the same time.
  Note: During the RESET operation the current is : Setting current x number of positions.
- Latching models with AUTOMATIC RESET are available; these products have an internal SET/RESET circuit which automatically set the desired position and reset the non-selected positions. This option simplifies the use of latching switches by suppressing the RESET command in switching sequence.
  For example: During the AUTOMATIC RESET operation, a 28V, 4 positions switch has temporarily a consumption of 250 mA, during 40 ms maximum only.

AVAILABILITY OF OPTIONS ACCORDING TO BOTH TYPE AND NUMBER OF POSITIONS

Type	Number of positions	Available options
0 or 1	3 to 12	0 - 1 - 2 - 3 - 4 - 8
2 or 3	3 to 6	0 - 1 - 2 - 3 - 4
	7 to 12	0 - 1 - 3 - 4
4 or 5	3 to 6	0 - 2
	7 to 12	Not Available
8 or 9	3 to 12	0 - 2 - 8

COAXIAL SPnT up to 40 GHz – RAMSES Concept

GENERAL SPECIFICATIONS - RF PERFORMANCES

Connectors		SMA								
Number of positions		3 to 6				7 and 8				
Frequency range	GHz	DC-3 /DC - 18				DC-3 /DC - 18				
		DC- 3	3 - 8	8 -12.4	12.4-18	DC- 3	3 - 8	8 -12.4	12.4-16	16-18
V.S.W.R. (max)		1.20	1.30	1.40	1.50	1.20	1.30	1.40	1.50	1.60
Insertion Loss (max)	dB	.20	.30	.40	.50	.20	.30	.40	.55	.60
Isolation (min)	dB	80	70	60	60	80	70	60	60	60

Connectors		SMA							
Number of positions		9 and 10					11 and 12		
Frequency range	GHz	DC - 3 / DC - 18					DC-3 /DC - 12.4		
		DC - 3	3 - 8	8 -12.4	12.4-15.5	15.5-18	DC - 3	3 - 8	8 -12.4
V.S.W.R. (max)		1.20	1.30	1.40	1.50	1.70	1.20	1.40	1.80
Insertion Loss (max)	dB	.20	.30	.40	.50	.70	.20	.35	.70
Isolation (min)	dB	80	70	60	60	55	80	70	60

Connectors		DIN1.6 / 5.6		SMA 2.9				
Number of positions		3 to 6		3 to 6				
Frequency range	GHz	DC - 1		DC - 26.5 / DC - 40				
		DC - 0.5	0.5 - 1	DC - 6	6 - 12.4	12.4 - 18	18 - 26.5	26.5-40
V.S.W.R. (max)		1.25	1.30	1.30	1.40	1.50	1.70	2.20
Insertion Loss (max)	dB	.15	.20	.20	.40	.50	.70	1.10
Isolation (min)	dB	90	80	70	60	60	55	50

GENERAL SPECIFICATIONS - ADDITIONAL SPECIFICATIONS

Operating mode		Normally open or Latching			
		Normally open		Latching	
Actuator voltage (nominal)	Vdc	12	28	12	28
Operating current at 23°C	mA	250	102	See table page 49	
Average power		See Power Rating Chart page 9			
Peak power	kW	1.5 (1 µs, 1 ‰)			
TTL INPUT	High level Low level	2.2 to 5.5 V (TTL option) / 3.5 to 5.5 (BCD option) 0 to 0.8 V (TTL option) / 0 to 1.5 V (BCD option)			
Indicator rating		1 W - 30 V - 100 mA			
Switching time (max)	ms	15 (for automatic reset models, SP3T to SP6T: 40 ms, SP7T to SP12T: 50 ms)			
Life			SMA	SMA 2.9 / 1.6/5.6	
SP3 to 6T		R573 serie	5 10^6 cycles per way	2 10^6 cycles per way	
		R574 serie	2 10^6 cycles per way		
SP7 to 12T		2 10^6 cycles per way			
Connectors		SMA , SMA 2.9 or 1.6/5.6			
Actuator terminals		Solder pins or DSUB			
Operating temperature range	°C	-40, +85 (SMA & SMA 2.9) /-25,+70 (DIN1.6/5.6)			
Storage temperature range	°C	-55, +85 (SMA & SMA 2.9) / -40 , +85 (DIN1.6/5.6)			
Impedance	Ω	SMA & SMA 2.9		DIN 1.6/5.6	
		50		75	
For terminated models		50 Ω termination ±5% 1 Watt per termination 3 W total power handling per switch			
Switching sequence		Break Before Make			

COAXIAL SPnT up to 40 GHz – RAMSES Concept



TYPICAL OUTLINE DRAWING

3 to 6 positions NOT TERMINATED

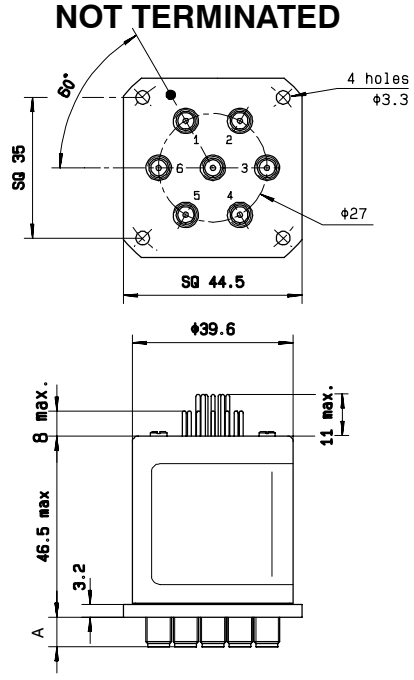

SOLDER PINS :
Type 0 or 1 with option 0 – 1 – 3 or 4
Type 2 or 3 with option 0 or 1

3 to 6 positions NOT TERMINATED

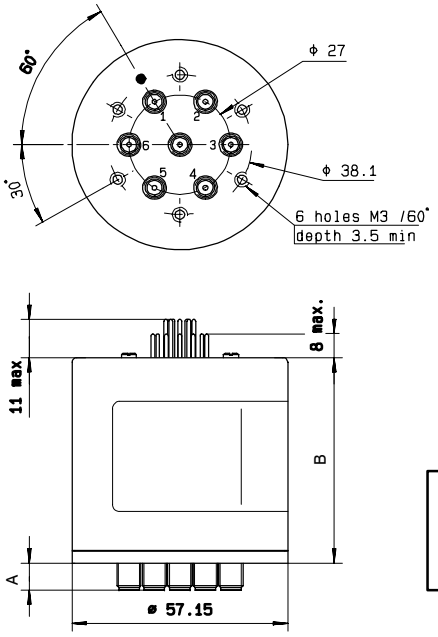

B : 61.5
with D Sub
B : 55
with solder pins

SOLDER PINS :
Type 0 or 1 with option 2 or 8
Type 2 or 3 with option 2 – 3 – 4 or 8
Type 4 – 5 – 8 or 9 with option 1 – 2 – 3 – 4 or 8
D Sub : all models

Connectors	SMA	SMA 2.9	DIN 1.6/5.6
A max (mm)	7.4	6.3	11.5