2 mm dia. SERIES

ACCESSORIES

☞ PIN OUTLET

Part number	Dimensions (12 mm between axes)
R 929 992 000* / Blue **R 929 992 001*** / Red **R 929 992 002*** / Green **R 929 992 003*** / Black **R 929 992 004*** / Yellow	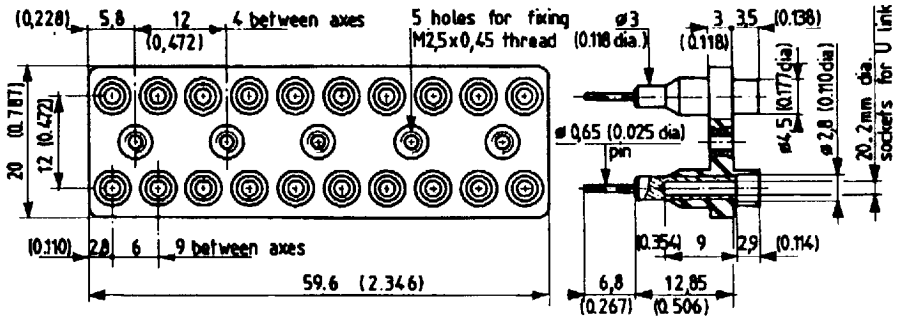 ***Drilling jig : R 282 906 **** *Panel piercing dimension: (thickness: 2 mm maximum)* *20 holes 5 dia. (contacts) – 5 holes 3 dia. (fixing)*

☞ SOLDER OUTLET

Part number	Dimensions (6 mm between axes)
R 929 993 000* / Blue **R 929 993 001*** / Red **R 929 993 002*** / Green **R 929 993 003*** / Black **R 929 993 004*** / Yellow	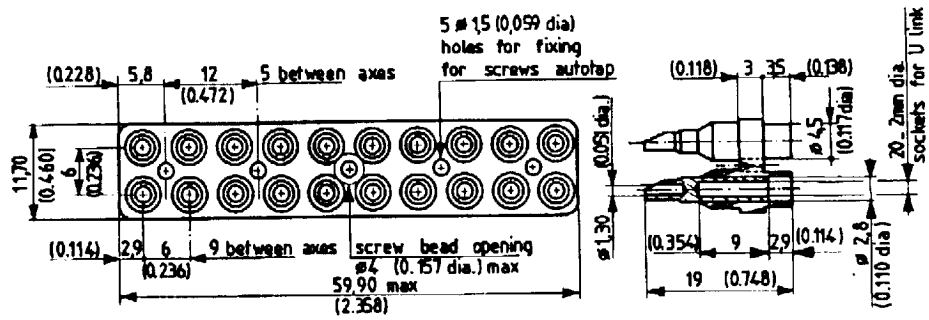 ***Drilling jig : R 282 690 **** *Panel piercing dimension: (thickness: 2 mm maximum)* *20 holes 5 dia. (contacts) – 5 holes 3 dia. (fixing)*

☞ PIN OUTLET

Part number	Dimensions (6 mm between axes)
R 929 994 000* / Blue **R 929 994 001*** / Red **R 929 994 002*** / Green **R 929 994 003*** / Black **R 929 994 004*** / Yellow	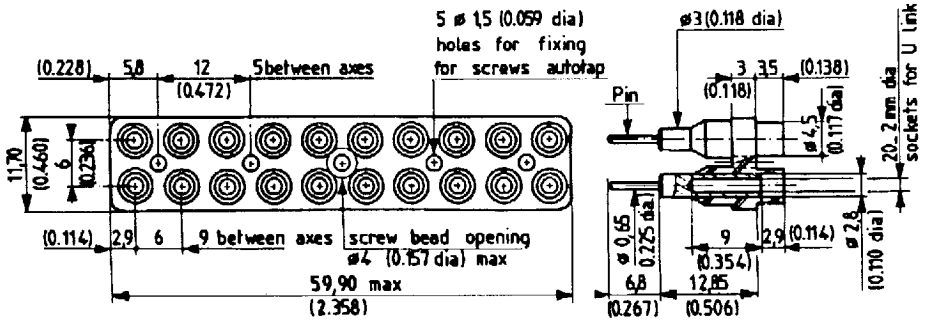 ***Drilling jig : R 282 690 **** *Panel piercing dimension: (thickness: 2 mm maximum)* *20 holes 5 dia. (contacts) – 5 holes 3 dia. (fixing)*

NOTA : The size of the contact blocks makes it possible to assemble them side by side while maintening a distance of 6 mm between axes in all directions.