RF 15 - Keycap, snap-on, for overall height 12.5 mm

5.46.654.059/0234



Dimensions	
Length	14.2 mm
Width	14.2 mm
Overall height	12.5 mm
Color	beige

Other specifications	
ROHS compliant	yes
REACH compliant	yes

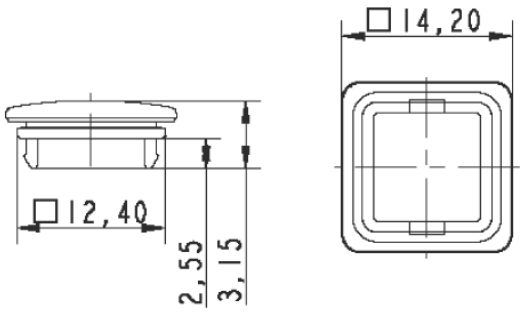

Technical data are approximate and intended solely for general orientation in the selection of a product.
Subject to modifications and errors. Images and other graphics may only be similar.
For more information, refer to www.rafi.de chapter Imprint / Data Protection.