Raspberry Pi High Quality Camera

Getting started

Operating instructions, regulatory compliance information, and safety information

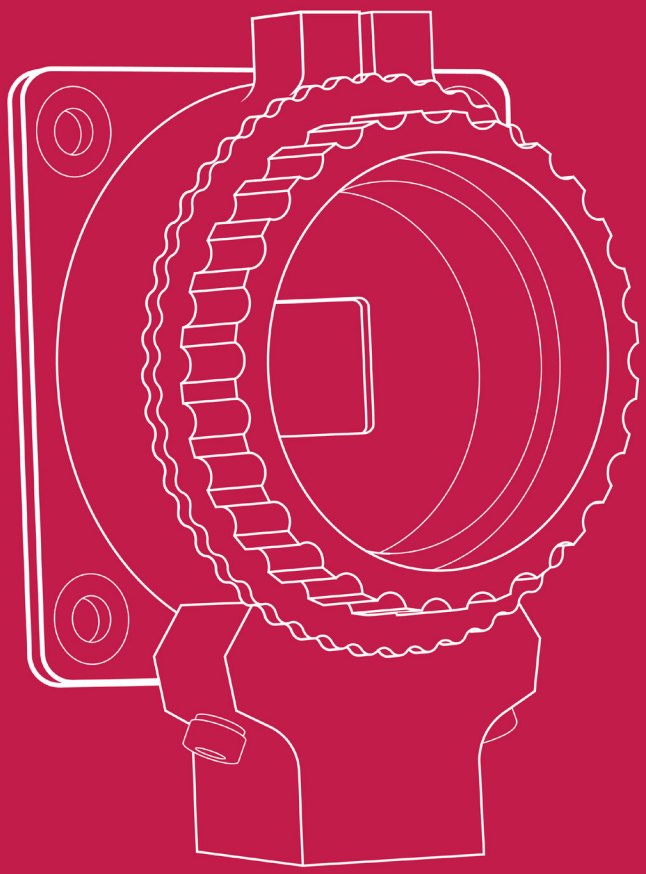

Published in April 2020
by Raspberry Pi Trading Ltd.

www.raspberrypi.org

Raspberry Pi

Operating instructions

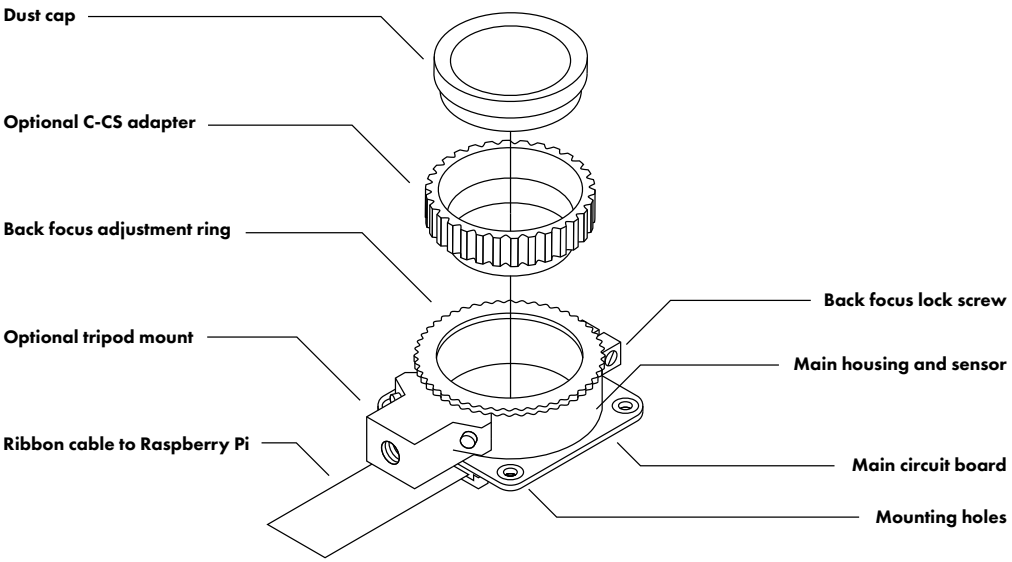

Fitting lenses

The High Quality Camera is designed to accept CS-mount lenses. An optional adapter is supplied to extend the back focus by 5 mm , such that the camera is also compatible with C-mount lenses.

Please ensure that the dust cap is fitted when there is no lens fitted, because the sensor is sensitive to dust. To fit a lens, unscrew the dust cap and screw the lens into the threads. Remove the C-CS adapter when a CS-mount lens is to be fitted; it is only required when a C-mount lens is fitted.

The CGL 6 mm CS-mount and 16 mm C-mount lenses are examples of third-party products that are compatible with the High Quality Camera. See step-by-step instructions for fitting the CS-mount and C-mount lenses.

Back focus adjustment

The back focus adjustment mechanism has two purposes:

1. When using a small, low-cost, fixed-focus lens, it allows adjustment of the focus.
2. When using an adjustable-focus lens, it allows adjustment of the focal range.

To adjust the back focus:

1. Ensure the lens is screwed all the way into the back focus adjustment ring.

2. Loosen the back focus lock screw with a small flat screwdriver.
3. Adjust the back focus height by turning the back focus adjustment ring clockwise or anti-clockwise relative to the main housing until the camera is in focus.
4. Tighten the back focus lock screw.

Tripod mount

The tripod mount is an optional component, and it can be unscrewed when it is not needed. If it is needed, take care not to damage the ribbon when screwing the tripod into the camera.

Connecting the High Quality Camera to a Raspberry Pi computer

Ensure your Raspberry Pi is switched off, then carefully release the plastic catch on the Raspberry Pi's camera connector. Insert the camera ribbon with the contacts facing away from the catch. Once you have pushed the ribbon in as far as it will go, push the catch back in. It is now safe to power up your Raspberry Pi.

Operating the camera

First, enable the camera in Raspbian: in the Raspbian menu, select Preferences, then Raspberry Pi Configuration. Click the Interfaces tab, find the Camera entry in the list, and select Enabled. Click OK, and reboot your Raspberry Pi when prompted.

`raspistill` is a command line tool for capturing camera images. To check your camera is correctly installed, open a terminal window (Raspbian menu > Accessories > Terminal) and take a test photograph by entering the command:

```
raspistill -o test.jpg
```

When you hit ENTER a live preview image will appear, and after a default period of five seconds, the camera will capture a single still image. This will be saved in your home folder and named **test.jpg**.

To use the camera just as a viewfinder, without saving a photo, use this command:

```
raspistill -t 0
```

For more detailed information about installing and operating camera software, refer to https://www.raspberrypi.org/documentation/configuration/camera.md. For more advanced information about controlling the camera, see https://www.raspberrypi.org/documentation/raspbian/applications/camera.md.

Alternatively, refer to The Official Raspberry Pi Camera Guide, published by Raspberry Pi Press.

Other features of the camera

Rotating the camera

It is possible to position the camera circuit board upside down with respect to the tripod mount. In this situation the ribbon will extend out from the top of the unit, rather than from the bottom.

To rotate the camera:

1. Work in a clean and dust-free environment, as the sensor will be exposed to the air. Work with the sensor facing downwards throughout the process.
2. Unscrew the two 1.5 mm hex lock keys on the underside of the main circuit board. Be careful not to let the washers roll away.
3. Lift the main housing and rotate it 180 degrees. The gasket will remain on the circuit board, so realign the housing with the gasket.
4. The nylon washer prevents damage to the circuit board; apply this washer first. Next, fit the steel washer, which prevents damage to the nylon washer.
5. Screw down the two hex lock keys. As long as the washers have been fitted in the correct order, they do not need to be screwed very tightly.

Infrared (IR) filter

The High Quality Camera contains an IR filter, which is used to reduce the camera's sensitivity to infrared light. It is possible to remove this filter, but doing so will void the warranty on the product, and is likely to prove irreversible. See further information on removing the IR filter.

Regulatory compliance

EU

The Raspberry Pi High Quality Camera is in conformity with the following applicable community harmonised legislation:

Electromagnetic Compatibility Directive (EMC) 2014/30/EU,

Restriction of Hazardous Substances (RoHS) Directive 2011/65/EU

The following harmonised standards have been used to demonstrate conformity to these standards:

EN 55032:2015

EN 55024:2010

IEC60695-2-11

EN60950-1

WEEE Directive Statement for the European Union

This marking indicates that this product should not be disposed with other household wastes throughout the EU. To prevent possible harm to the environment or human health from uncontrolled waste disposal, recycle it responsibly to promote the sustainable reuse of material resources. To return your used device, please use the return and collection systems or contact the retailer where the product was purchased. They can take this product for environmental safe recycling.

Note: See a full online copy of this Declaration
For compliance information for all Raspberry Pi products, see https://www.raspberrypi.org/compliance/

FCC

The Raspberry Pi High Quality Camera is in conformity with the requirements of the following specifications:

FCC 47 CFR Part 15, Subpart B, Class B Digital Device.

This device complies with part 15 of the FCC Rules. Operation is subject to the following two conditions: (1) This device may not cause harmful interference, and (2) this device must accept any interference received, including interference that may cause undesired operation.

Safety information

IMPORTANT: PLEASE RETAIN THIS INFORMATION FOR FUTURE REFERENCE

WARNINGS

- This product should only be connected to and powered by a Raspberry Pi computer. Any external power supply used with the Raspberry Pi should comply with relevant regulations and standards applicable in the country of intended use.
- This product should be operated in a well ventilated environment and should not be covered.
- This product should be placed on a stable, flat, non-conductive surface while it is in use, and it should not be contacted by conductive items.

INSTRUCTIONS FOR SAFE USE

To avoid malfunction of or damage to your Raspberry Pi High Quality Camera, please observe the following:

- Do not expose it to water or moisture, or place it on a conductive surface whilst in operation.
- Do not expose it to heat from any source; the Raspberry Pi High Quality Camera is designed for reliable operation at normal ambient room temperatures.
- Take care whilst handling to avoid mechanical or electrical damage to the printed circuit board and exposed connectors. Use a tripod with the device to minimise damage to the electronic components.
- Avoid handling the Raspberry Pi High Quality Camera while it is powered. Handle only by the edges or by the lens mount assembly to minimise the risk of causing damage by electrostatic discharge.
- Take care not to damage any of the exposed electronics components. These are easily damaged if the unit is dropped, and this is especially the case if a large lens is fitted.

For all compliance certificates and numbers, please visit https://www.raspberrypi.org/compliance/

MIPI DSI and MIPI CSI are service marks of MIPI Alliance, Inc
Raspberry Pi and the Raspberry Pi logo are trademarks of the Raspberry Pi Foundation

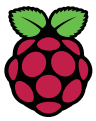

Raspberry Pi