Technical Data Sheet

R12C2T12/R Series / Power Module

2.5W / 9V-18VDC / 36 Pin SSOP Package

RECOM
DC/DC Converter

FEATURES

- 2.5W isolated DC/DC converter
- Programmable asymmetrical output voltages
- 9 - 18VDC input voltage range
- For IGBT/Si/SiC/Cascode GaN gate drive bias voltages
- High 5kVAC/1min reinforced isolation / 1.4kVDC working voltage
- High dV/dt immunity with 150kV/µs CMTI
- Full load 1.5W from -40°C to +90°C
- Less than 3.5pF isolation capacitance
- Compact 7.5x12.83mm SMD package
- 3 year warranty



Dimensions (LxWxH): 12.83 x 7.5 x 3.55mm (0.51 x 0.30 x 0.14 inch)
0.1g (0.0032 oz)

APPLICATIONS



SAFETY & EMC

RoHS² compliant 10 from 10

Reach compliant

c UL us E542996

DESCRIPTION

The R12C2T12/R 2.5W isolated DC/DC converter is a versatile solution designed for isolated gate bias voltages, particularly for transistors such as IGBTs, Si and SiC MOSFETs, and Cascode GaNs. This compact converter features a wide input voltage range of 9 - 18VDC and programmable asymmetrical output voltages, ensuring precise control and performance optimization for power electronics applications. With high 5kVAC/1min isolation, 1.4kVDC working voltage, high 150kV/µs CMTI, and remarkable stability up to 120°C (0.5W), it offers superior reliability, even under harsh high power, high frequency switching environments. The ultra-low isolation capacitance, less than 3.5pF, ensures minimal noise propagation across the isolation barrier. All of these exceptional features are packaged in a compact 7.5 x 12.83mm SMD form factor, making it an ideal choice for all isolated gate bias voltage needs.

SELECTION GUIDE

Part Number	Input Voltage Range [VDC]	Output Voltage Range(1) [VDC]	Output Current max. [mA]	Efficiency typ. [%]
R12C2T12/R	9 - 18	V_{OUT+}= 2.5 - 15.5 V_{OUT-}= (-2.5) - (-15.5)(2) V_{TOTAL}= 10 - 18	I+= +100mA I-= -12mA	47

Note1: V_{OUT+} and V_{OUT-} can be set from 2.5VDC to 15.5VDC or -2.5VDC to -15.5VDC respectively but the total must be within the range of 10VDC to 18VDC. For more information see **„Typical Application“** below.

Note2: For V_{OUT-} between 0V and -2.5V please contact techsupport@recom-power.com

copyright © RECOM Power GmbH, all rights reserved

ABSOLUTE MAXIMUM RATINGS (measured @ T_{AMB}= 25°C, nom. V_{IN}, full load and after warm-up unless otherwise stated)

Parameter	Symbol	Min.	Typ.	Max.
Absolute maximum voltage	V_{IN} to PGND	-0.3VDC		32VDC
	CTRL, PG to PGND	-0.3VDC		7VDC
	V_{OUT+}, COM, FBV_{OUT+}, FBV_{OUT-} to V_{OUT-}	-0.3VDC		32VDC
Maximum internal power losses[3]	T_{AMB} = +25°C			2.45W
Maximum output power	V_{TOTAL}= V_{OUT+} to V_{OUT-}, T_{AMB} = +25°C			2.5W
Junction Temperature		-40°C		+150°C
Storage Temperature		-65°C		+150°C

Note3: Exceeding maximum allowable power dissipation causes the device to enter thermal shut down which protects the device from permanent damage.

BASIC CHARACTERISTICS (measured @ T_{AMB}= 25°C, nom. V_{IN}, full load and after warm-up unless otherwise stated)

Parameter	Symbol	Condition	Min.	Typ.	Max.
Input Voltage Range	V_{IN}	refer to **„Derating Graph“**	9VDC	12VDC	18VDC
Under Voltage Lockout (UVLO)[4]		rising	7.8VDC	8.2VDC	8.5VDC
		falling	7VDC	7.4VDC	7.7VDC
Over Voltage Lockout (OVLO)		rising	20.9VDC	22VDC	23.1VDC
		falling	19VDC	20VDC	21VDC
Soft Start Time				10ms	
Standby Current	I_Q	V_{CTRL}= 0VDC, V_{IN}= 8VDC to 18VDC			600µA
Quiescent Current		V_{CTRL}= 5VDC, V_{IN}= 8VDC to 18VDC, no load			40mA
Power Dissipation		refer to **„Power Dissipation“**		2.36W	
Switching Frequency		V_{IN}= 12VDC, V_{OUT}= 12VDC		20.5MHz	

Note4: The R12C2T12/R can operate at V_{IN}= 8VDC as long as V_{IN} is higher as UVLO rising during start up.

Efficiency vs. Output current

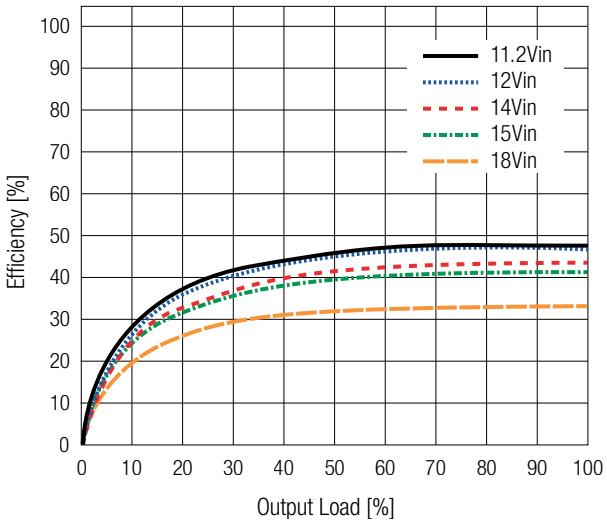

Power Dissipation

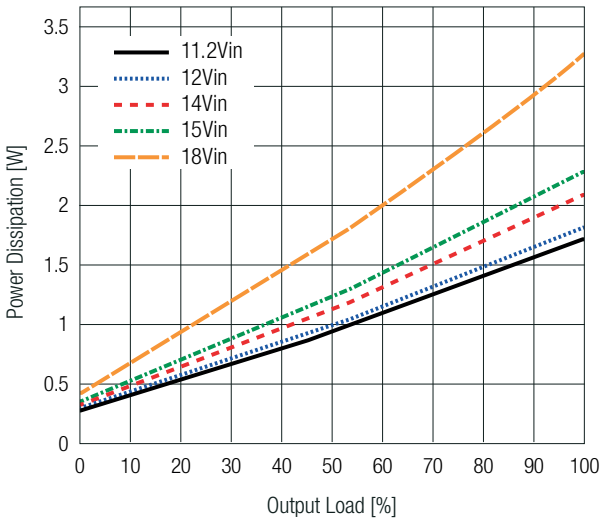

REGULATIONS

Parameter	Symbol	Condition	Min.	Typ.	Max.
Feedback Voltage[5]	V_{FB}	FBV_{OUT+} or FBV_{OUT-} to V_{OUT-}	0VDC	2.5VDC	5.5VDC
		V_{OUT+} to V_{OUT-} in regulation	2.4675VDC	2.5VDC	2.5325VDC
Feedback V_{OUT+} Hysteresis		hysteresis at the FBV_{OUT+} pin	9mV	10mV	12.3mV
Output Voltage Accuracy		0.1% of FB resistors	-1.3%		1.3%

Note5: For isolated gate driver applications, one positive and one negative output are needed. In this case, V_{OUT+} to V_{OUT-} is the total output voltage, and the middle point becomes the reference point. Because the total voltage between V_{OUT+} and V_{OUT-} is always regulated through the FBV_{OUT+} feedback, the COM pin only must regulate the middle point voltage so that it can give the correct positive and negative voltages. The COM control is achieved through FBV_{OUT-} pin as described in **„Adjustability“** section.

copyright © RECOM Power GmbH, all rights reserved

BASIC CHARACTERISTICS (measured @ T_{AMB}= 25°C, nom. V_{IN}, full load and after warm-up unless otherwise stated)

Derating Graph

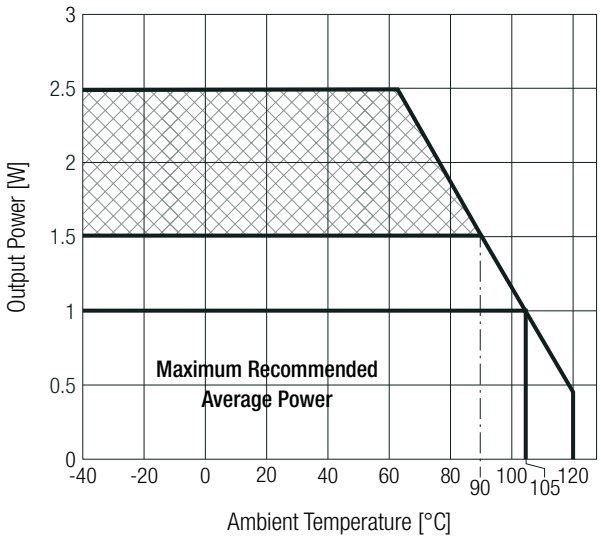

Note6: Exceeding maximum allowable power dissipation causes device to enter thermal shutdown which protects device from permanent damage.

Note7: Keep the average power at 1.5W max. or peak power 2.5W for 5 seconds max.

Note8: Test with Recom 50x50mm standard EVM board with 70µm copper, double layer

Input and output voltage power limitations

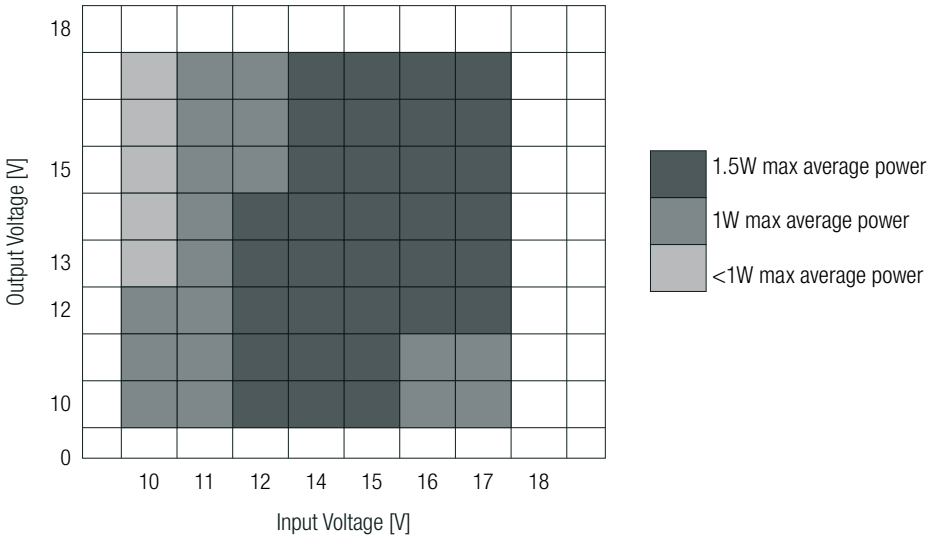

copyright © RECOM Power GmbH, all rights reserved

ADJUSTABILITY

Parameter	Condition	Min.	Typ.	Max.
Output Voltage Trimming	V_{OUT+} to V_{OUT-}	10VDC		18VDC
	AGND to V_{OUT-}	2.5VDC		V_{OUT+} to V_{OUT-}

The R12C2T12/R module creates two regulated outputs. It can be configured as a single output converter, V_{OUT+} to V_{OUT-} only, or a dual-output converter, V_{OUT+} to V_{OUT-} and COM to V_{OUT-}. Even though the module uses V_{OUT-} as the reference point to create two positive output voltages, the outputs can use COM as the reference point and become a positive and a negative output.

These two outputs are controlled independently through hysteresis control. Furthermore, the V_{OUT+} to V_{OUT-} is the main output, and COM to V_{OUT-} uses the main output as its input to create a second regulated output voltage.

Typical Application

V_{TOTAL}= 10-18VDC, P_{MAX}= 2.5 watts

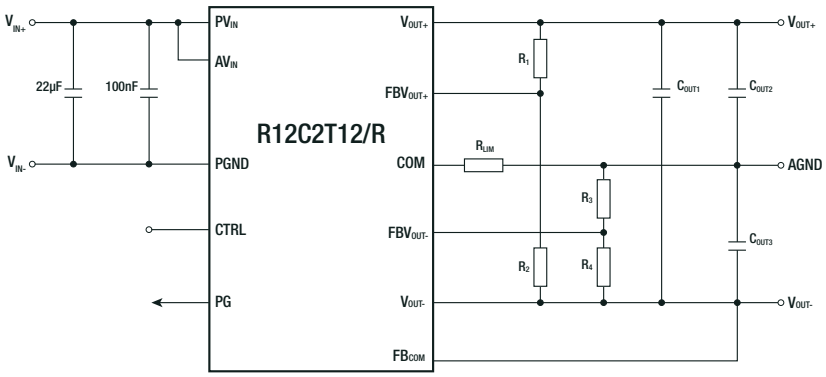

Example

To set the device into dual configuration, for example to +13/-5V, start to define main output voltage as the sum of both desired voltages (|13V| + |-5V| = 18V). 18V are V_{OUT+} to V_{OUT-}. Then set the negative output.

+13/-5 V_{TOTAL}= 18VDC, V_{OUT-}= -5VDC
+15/-3 V_{TOTAL}= 18VDC, V_{OUT-}= -3VDC
+10/-5 V_{TOTAL}= 15VDC, V_{OUT-}= -5VDC

Note9: Set V_{TOTAL} first and afterwards V_{OUT-}. V_{TOTAL} must be between 10VDC and 18VDC

copyright © RECOM Power GmbH, all rights reserved

TRIM FUNCTION

Setting the Main Output - Single Configuration

The V_{OUT+} to V_{OUT-} output is the primary module output, regulated by the sensed voltage on FBV_{OUT+} pin. The V_{OUT+} to V_{OUT-} voltage is sensed through a voltage divider (R1 and R2). When FBV_{OUT+} voltage is below the turn-off threshold (approx. 10mV above the 2.5V reference), the power stage operates, raising the output voltage. Once the output reaches the turn-off threshold, the power stage turns off, causing the voltage to drop due to load current. When the output voltage falls below the turn-on threshold (approx. 10 mV below the 2.5V reference), the power stage is reactivated. Precise voltage reference and hysteresis control ensure accurate regulation. For enhanced noise immunity, add a 330pF capacitor between FBV_{OUT+} and V_{OUT-} pins, avoiding excessive capacitance to prevent output voltage ripple or stability issues. If only a single output is required, connect FBV_{OUT-} to FBV_{OUT+} and leave COM pin open.

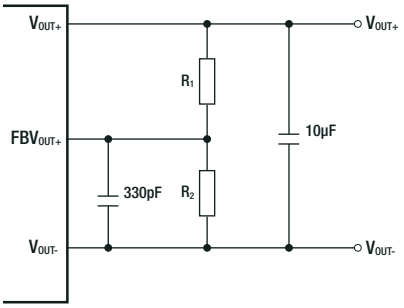

Calculation

$$R_1 = \frac{(V_{OUT+} - V_{ref})}{V_{ref}} \times R_2$$

Example

$$R_1 = \frac{(18V - 2.5V)}{(2.5V)} \times 11k\Omega = \mathbf{68k2\Omega}$$

Recommended resistor values for common V_{OUT+}:

V_{OUT+} [VDC]	R_2 [Ω]	R_1 [Ω]
10	11k	33k2
11		37k4
12		42k2
13		46k4
14		51k1
15		54k9
16		59k
17		63k4
18		68k1

*(according to E96)

Setting the Second Output - Dual Configuration

For isolated gate drivers, V_{OUT+} to V_{OUT-} provides the regulated total voltage with the midpoint as the reference. The COM pin regulates the midpoint voltage for accurate positive and negative outputs based on FBV_{OUT+} feedback.

In Figure below, COM to V_{OUT-} is monitored through R3 and R4 on FBV_{OUT-}. A 330pF capacitor on FBV_{OUT-} filters noise. Charging resistor activation, controlled by FBV_{OUT-}, raises COM to V_{OUT-} voltage. After reaching the stop charging threshold, the charging resistor turns off. The discharge resistor, with a 20mV hysteresis, is then controlled by FBV_{OUT-}.

The COM to V_{OUT-} regulator protects against prolonged high-side FET activation during a COM to V_{OUT-} short. It monitors COM pin voltage, adjusting the high-side FET duty ratio. If COM pin voltage is below 0.645V while FBV_{OUT-} is under 2.48V, a 20% duty ratio control overrides normal hysteresis. When COM pin voltage exceeds 0.73V, duty ratio control is disabled, and normal operation resumes.

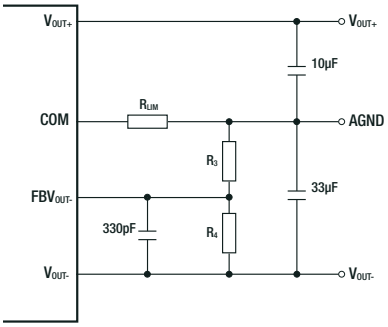

Calculation

$$R_3 = \frac{(V_{OUT-} - V_{ref})}{V_{ref}} \times R_4$$

Example

$$R_3 = \frac{(5V - 2.5V)}{2.5V} \times 49k9\Omega = \mathbf{49k9\Omega}$$

Recommended resistor values for common V_{OUT-}:

V_{OUT-} [VDC]	R_4 [Ω]	R_3 [Ω]
3	49k9	10k
4		30k1
5		49k9
9		130k

*(according to E96)

Note10: To achieve -2.5V on the V_{OUT-} output remove R4 and use a value between 10kΩ and 100kΩ for R3.

copyright © RECOM Power GmbH, all rights reserved

CAPACITOR SELECTION

For CIN place a 10-µF or more and a 0.1-µF high-frequency decoupling capacitor in parallel close to VIN pins. A capacitance greater than 10uF can be used to reduce the voltage ripple when the series impedance from the voltage source to the VIN pins is large. For COUT1 add a 2.2µF or more and a 100nF capacitor for high-frequency decoupling of VOUT+ to VOUT-. Place the capacitors close to the VOUT+ and VOUT- pins. A capacitance greater than 2.2µF can be used to reduce the output voltage ripple. The selection of COUT2 and COUT3 is based on the gate charge requirement for the gate driver load, the charge balancing during the start-up, and the expected maximum current loading. COUT2 and COUT3 capacitors should be placed close to the load. Calculate COUT2 first.

Minimal COUT2 Calculation

$$C_{OUT2} \overset{(11)}{=} \frac{Q}{V_{out+} * \frac{V_{pp}}{100}}$$

Parameter		Unit
Q	gate charge	nC
V_{PP}	accepted Ripple	%
V_{OUT+}	output voltage +	VDC

Recommended COUT2 value is about 10 times higher than the calculated minimum. For simplification, it is recommended to use values for COUT2 between 2.2uF and 10uF. Use the following simplified formula to calculate minimal value of COUT3:

Calculation

$$C_{OUT3} = \frac{V_{out+}}{V_{out-}} \times 1.1 \times C_{OUT2}$$

Example +15/-3 Outputs

Parameter		Value
Q	gate charge	55nC
V_{PP}	accepted Ripple	1%
V_{OUT+}	output voltage +	15VDC
V_{OUT-}	output voltage -	3VDC

$$C_{OUT2} = \frac{55nC}{15V * \frac{1\%}{100}} = 0.366\mu F$$ selected COUT2 = 4.7µF

$$C_{OUT3} = \frac{V_{OUT+}}{V_{OUT-}} \times 1.1 \times COUT2$$

$$C_{OUT3} = \frac{15VDC}{3VDC} \times 1.1 \times 4.7\mu F = 25.85\mu F$$ user selected COUT3 = 3x10µF

CIN	min. COUT1 (VOUT+ to VOUT-)	VOUT+ to COM	VOUT- to COM	recommended COUT2	recommended COUT3
10µF + 100nF	2.2µF + 100nF	15VDC	3VDC	4.7µF	3x10µF
10µF + 100nF	2.2µF + 100nF	7VDC	3VDC	4.7µF	15µF

Note11: (V_{OUT+}/V_{OUT-})*1.1 defines the minimal COUT3 to COUT2 ratio. Consider all capacitace connected to VOUT+ to COM in the system as COUT2 and then calculate the minimal COUT3. If COUT3 in the system is lower than the calculated minimum, the device may not start.

copyright © RECOM Power GmbH, all rights reserved

CAPACITOR SELECTION

Typical gate drive application

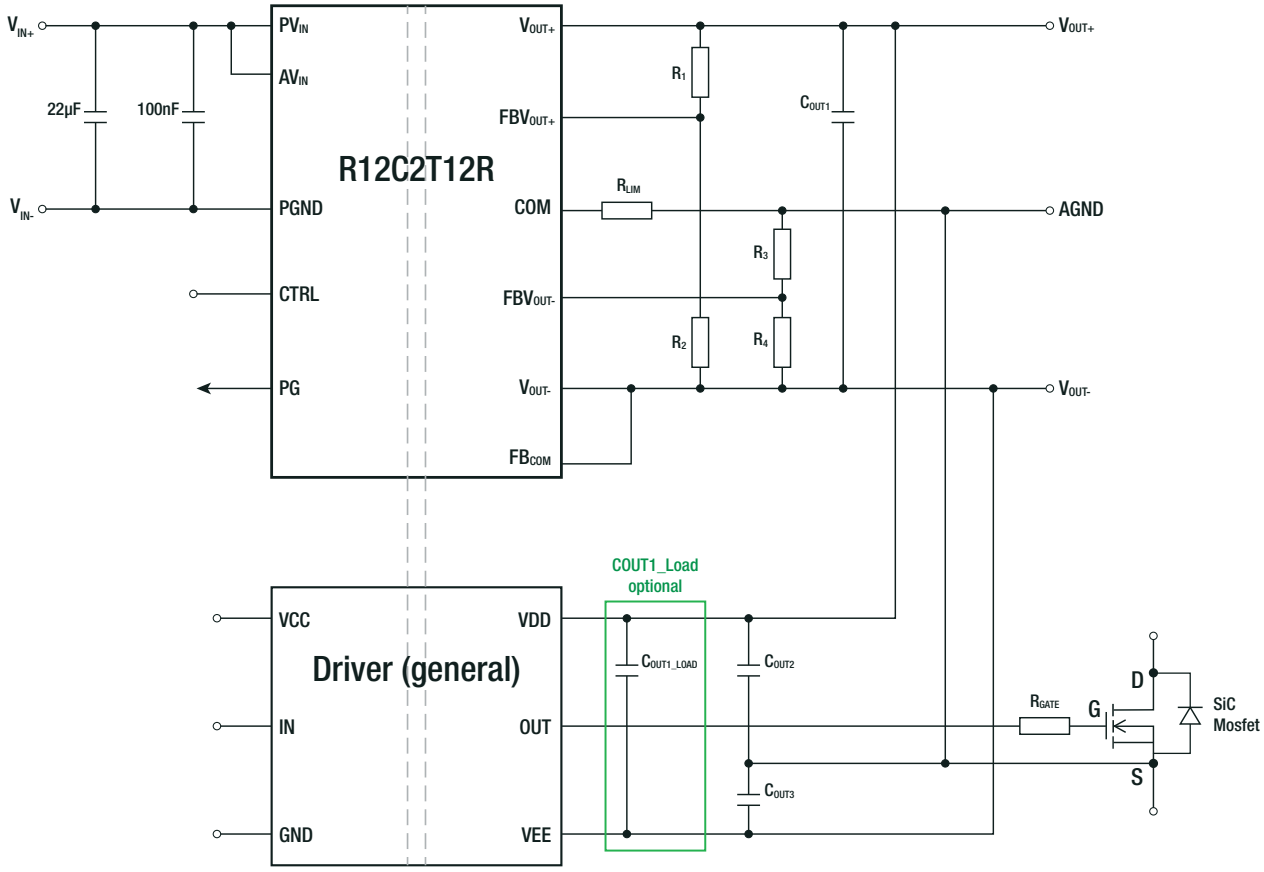

In order to reduce the number of capacitors needed for COUT2 and COUT3, an additional capacitor COUT1_LOAD can be added at the load (driver circuit in the figure above) between VOUT+ and VOUT- rails.

COUT1_LOAD value [uF]	COUT2 value [%]	COUT3 value [%]
Not used	100%	100%
4.7uF	60%	60%
10uF	40%	40%
22uF	30%	30%

For +15V/-3V configuration without using COUT1_LOAD capacitor the recommended values of COUT2 = 4.7uF and COUT3 = 3 x 10uF. By using 10uF as COUT1_LOAD, the value of COUT2 can be reduced to 40% of its original value. COUT2 can be then reduced from 4.7uF to 2.2uF. The minimal ratio of COUT3 to COUT2 has to fulfilled, so the same equation as before applies to COUT3 calculation.

$$C_{OUT3} = \frac{V_{OUT+}}{V_{OUT-}} \times 1.1 \times COUT2$$

$$C_{OUT3} = \frac{15VDC}{3VDC} \times 1.1 \times 2.2\mu F = 12.1\mu F$$

The closest higher value is 15uF. The number of COUT3 capacitors have been reduced from 3 pieces to 1 piece. In total the design contains 1 capacitor less.

copyright © RECOM Power GmbH, all rights reserved

DEFINING RLIM

When the device has been configured to dual positive or dual negative configuration, set up the RLIM resistor as the maximum load current (I_{OUT-_max}) needed for V_{OUT-} to COM path using following equation:

Calculation

$$R_{LIM} = \frac{V_{OUT-}}{I_{OUT} - _max} - R_{LIM_internal}$$

* $R_{LIM_internal} = 30\Omega$
* I_{OUT-_max} = depends on application

Example R_{LIM} for V_{OUT-}= 5VDC

$$R_{LIM} = \frac{5V}{12mA} - 30\Omega = \mathbf{383\Omega}$$

* I_{OUT-_max} has been defined as 12mA for the target application

When the device has been configured to dual output configuration with one positive and one negative output, set up the RLIM resistor using following equation:

Calculation

$$R_{LIM}^{(12)} = \frac{V_{OUT-}}{38 \times V_{OUT-} \times COUT3 + 0.005} - R_{LIM_internal}$$

Example RLIM for V_{OUT-} = 5V and COUT3 = 40uF

$$R_{LIM} = \frac{5V}{38 \times 5V \times 0.00004F + 0.005} - 30\Omega = 367\Omega$$

* selected RLIM 10% lower=332 Ohm

Note12: The equation assumes 15% tolerance of the COUT3 capacitor and certain response time to transient conditions and load for the driver circuit. Higher value of the limiting resistor can be used in case the power losses have to be minimized. Contact RECOM for further assistance to calculate the right RLIM value for your application.

CONTROL FUNCTION

Parameter	Condition	Min.	Typ.	Max.
Control Pin Voltage	CTRL pin to PGND	0VDC		5.5VDC
ON/OFF CTRL	rising			2.1VDC
	falling	0.8VDC		
Input Current	no load			40mA
	full load		270mA	
Input Current of CTRL Pin	V_{CTRL}= 5.0V		5µA	18µA

POWER GOOD OPERATING CONDITIONS

Parameter	Condition	Min.	Typ.	Max.
PowerGood threshold	PG of negated	90% of V_{FB}		110% of V_{FB}
PowerGood pin voltage	PG pin to PGND	0VDC		5.5VDC
Primary side soft start time out	Timer begins when V_{IN} > UVLO and CTRL= High and reset when Powergood pin indicates Good		28.4ms	

AGND REGULATIONS HYSTERESIS

Parameter	Condition	Min.	Typ.	Max.
Feedback regulation reference voltage	AGND to V_{OUT-}	2.4675VDC	2.5VDC	2.5325VDC
COM pin Short Charge comparator rising threshold to exit PWM	rising		0.73VDC	
On-Time during COM pin Short Charge PWM mode	COM pin < 0.645VDC, while FBV_{OUT-} pin < 2.48VDC		1.2µs	
Off-Time during COM pin Short Charge PWM mode	COM pin < 0.645VDC, while FBV_{OUT-} pin < 2.48VDC		5µs	

OUTPUT UNDER VOLTAGE LOCKOUT

Parameter	Condition	Min.	Typ.	Max.
UVLO rising threshold (V_{OUT+} to V_{OUT-})	Voltage at FBV_{OUT+}		0.9VDC	
UVLO hysteresis (V_{OUT+} to V_{OUT-})	Voltage at FBV_{OUT+}		0.3VDC	

OUTPUT OVER VOLTAGE LOCKOUT

Parameter	Condition	Min.	Typ.	Max.
OVLO rising threshold	Voltage from V_{OUT+} to V_{OUT-}, rising	29.45VDC	31VDC	32.55VDC
OVLO falling threshold	Voltage from V_{OUT+} to V_{OUT-}, falling	27.55VDC	29VDC	30.45VDC

COMMON MODE TRANSIENT IMMUNITY (CMTI)

Parameter	Condition	Min.	Typ.	Max.
Common Mode Transient Immunity				±150V/ns

copyright © RECOM Power GmbH, all rights reserved

PROTECTIONS

Parameter	Condition	Min.	Typ.	Max.
Over Power Protection (OPP)				latch-off
Over Temperature Protection[13] (OTP)				latch-off
Over Temperature Shutdown Setpoint			160°C±10°C	
Over Temperature Shutdown Hysteresis	cool down after latch-off before restart is enabled		30°C±5°C	

Note13: The R12C2T12/R integrates power stages with over-temperature protection. If temperatures exceed limits, it stops switching and enters a latch-off protection mode.

THERMAL OPERATING CONDITIONS

Parameter	Condition	Min.	Typ.	Max.
Thermal Impedance	junction to case		28.5K/W	
	junction to board		25.9K/W	
	junction to ambient, refer to **„Note8“**		52.3K/W	
ESD	Human-body model (HBM), per ANSI/ESDA/JEDEC JS-001			±2kV
	Charged-device model (CDM), per JEDEC specification JESD22-C101			±500V
Moisture Sensitive Level				Level 3, 260°C, 168hrs

ISOLATION CAPABILITIES

Parameter	Condition		Min.	Typ.	Max.
Comparative tracking index (CTI)	DIN EN 60112 (VDE 0303-11); IEC 60112				600VDC
Overvoltage Category	Rated mains voltage ≤ 300 VRMS				I-IV
	Rated mains voltage ≤ 600 VRMS				I-IV
	Rated mains voltage ≤ 1000 VRMS				I-III
Isolation Voltage[14]	tested in qualification tested in production				5kVAC/1min. 6kVAC/1sec.
Repetitive peak isolation voltage	AC voltage (bipolar)				1.4kVp
Working isolation voltage	AC voltage (sine wave) Time dependent dielectric breakdown (TDDB) test				1000VRMS
	DC voltage				1.4kVDC
Transient isolation voltage	tested in qualification tested in production				7kVp/1min. 8.4kVp/1sec.
Impulse voltage	waveform per IEC 62368-1				7.6kVp
Surge isolation voltage	waveform per IEC 62368-1				10kVp
Isolation Resistance	input to output	VIO= 500VDC, TA= 25°C	1000GΩ		
		VIO= 500VDC, 100°C ≤ TA ≤ 125°C	100GΩ		
		VIO= 500VDC at TS= 150°C	1GΩ		
Isolation Capacitance	input to output				3.5pF
Internal Clearance	transformer power isolation		120µm		
	capacitive signal isolation		15.4µm		
External Clearance			8mm		
External Creepage			8mm		

Note14: High voltage isolation testing of a barrier component can degrade isolation capability. RECOM therefore strongly advises against repeated high-voltage isolation testing. If required, reduce specified retest voltage by 20%.

copyright © RECOM Power GmbH, all rights reserved

APPLICATION INFORMATION

Dual Output (one positive, one negative)

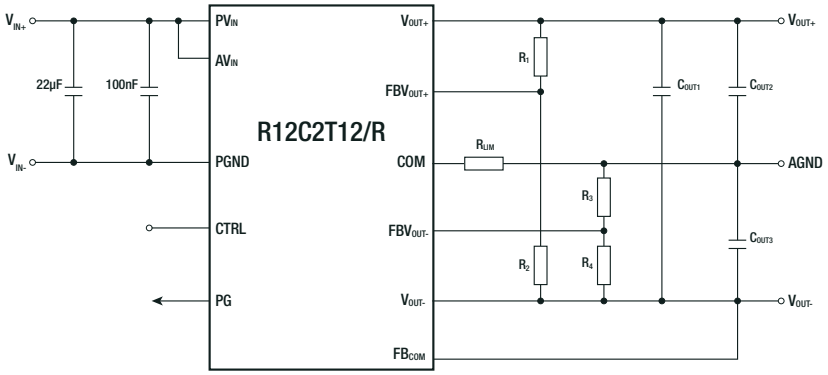

Single Output (positive)

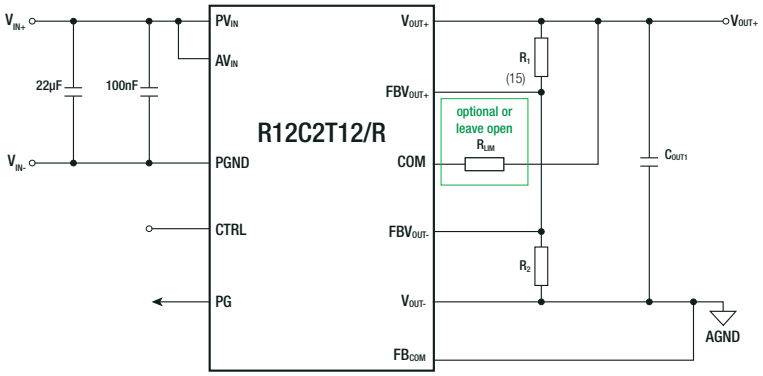

Single Output (negative)

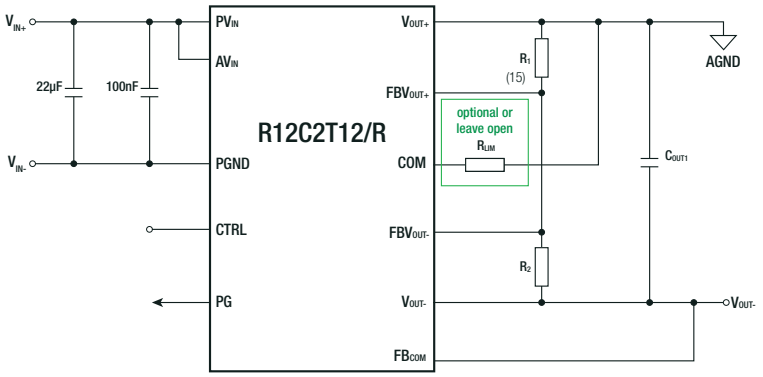

Note15: Use RLIM only for very low load cases (<15mA) and when very high switching frequency is used (>250kHz) the RLIM value should be at least 1kΩ.

Dual Output (both positive)

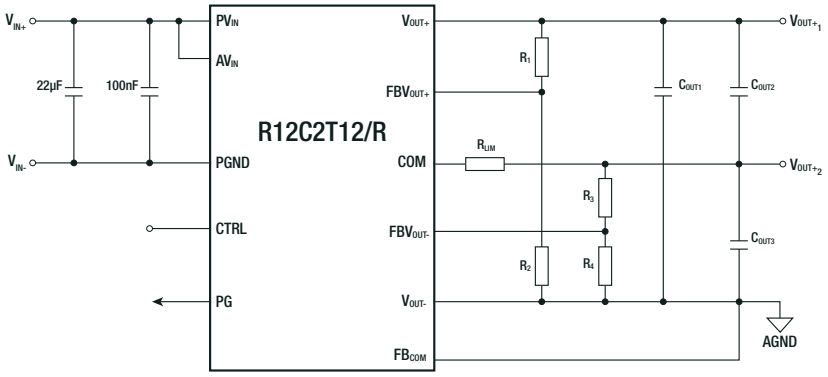

copyright © RECOM Power GmbH, all rights reserved

APPLICATION INFORMATION

Dual Output (both negative)

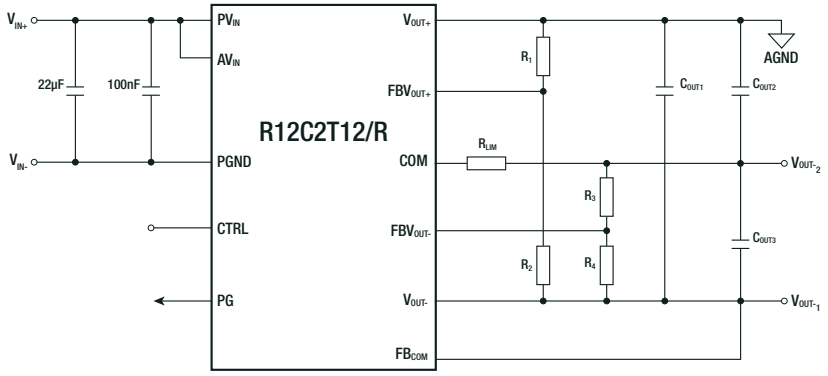

APPLICATION EXAMPLES

Dual Output (one positive, one negative)

V_{OUT+}= 15VDC, V_{OUT-}= 3VDC, V_{TOTAL}= 18VDC

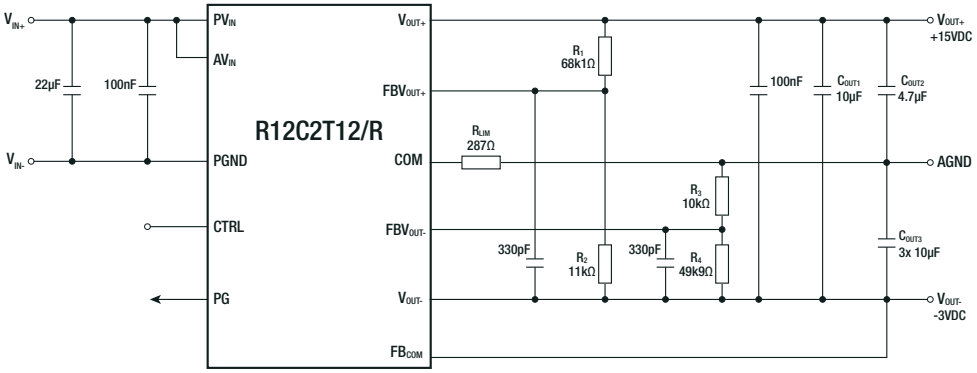

Dual Output (one positive, one negative) - RDR configuration

V_{OUT+}= 15VDC, V_{OUT-}= 3VDC, V_{TOTAL}= 18VDC

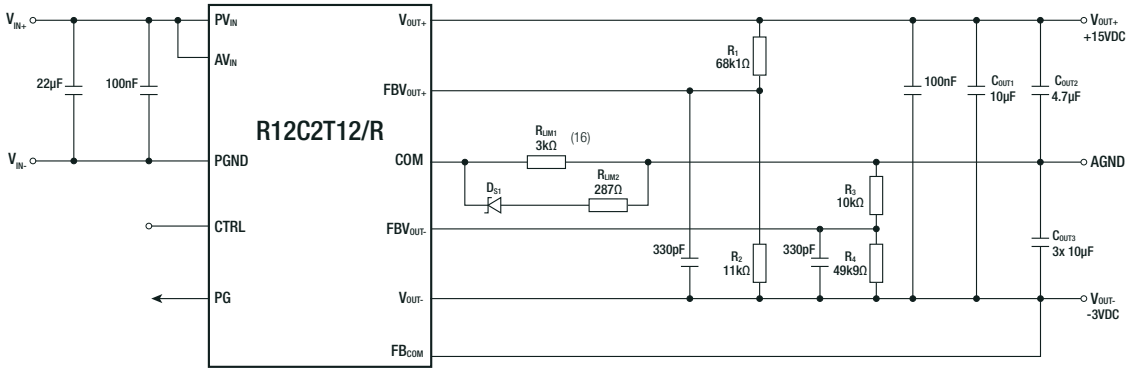

Note16: Using a Schottky diode and a resistor in paralel with a resistor allows programming the charge and discharge current independently. This RDR configuration greatly reduces power losses of the device.

Dual Output (one positive, one negative)

V_{OUT+}= 7VDC, V_{OUT-}= 3VDC, V_{TOTAL}= 10VDC

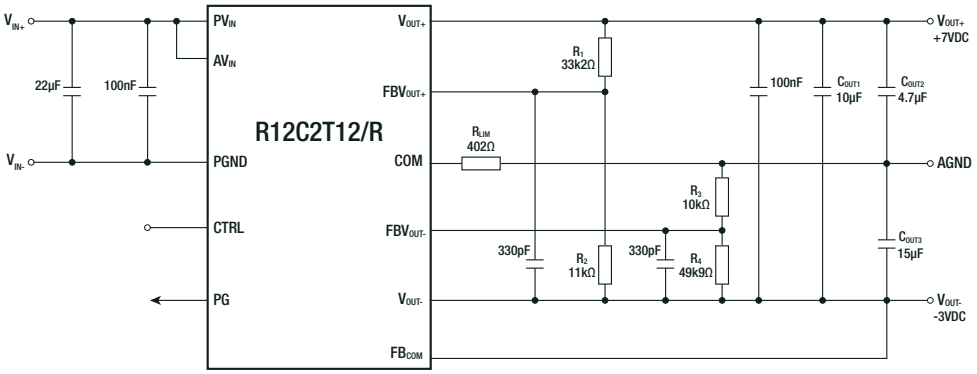

copyright © RECOM Power GmbH, all rights reserved

R12C2T12/R Series / Power Module

2.5W / 9V-18VDC / 36 Pin SSOP Package

RECOM DC/DC Converter

APPLICATION EXAMPLES

Single Output (positive)

V_{OUT}= 12VDC

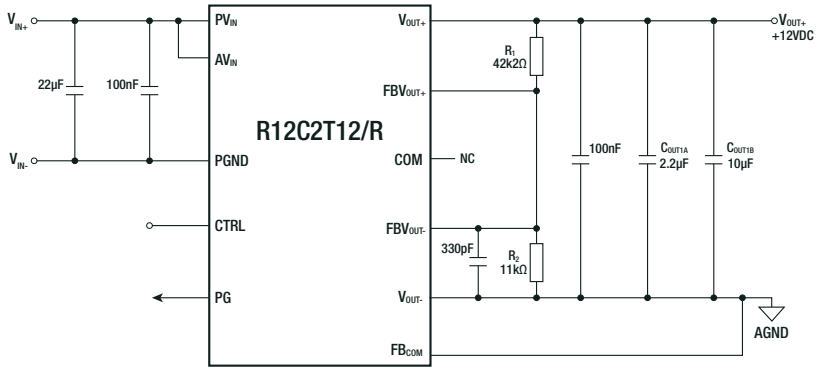

DIMENSION & PHYSICAL CHARACTERISTICS

Parameter	Type	Value
Dimension (LxWxH)		12.83 x 7.5 x 3.55mm 0.51 x 0.30 x 0.14 inch
Weight		0.1g typ. 0.0032 oz

Dimension Drawing (mm)

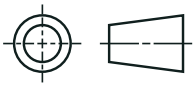

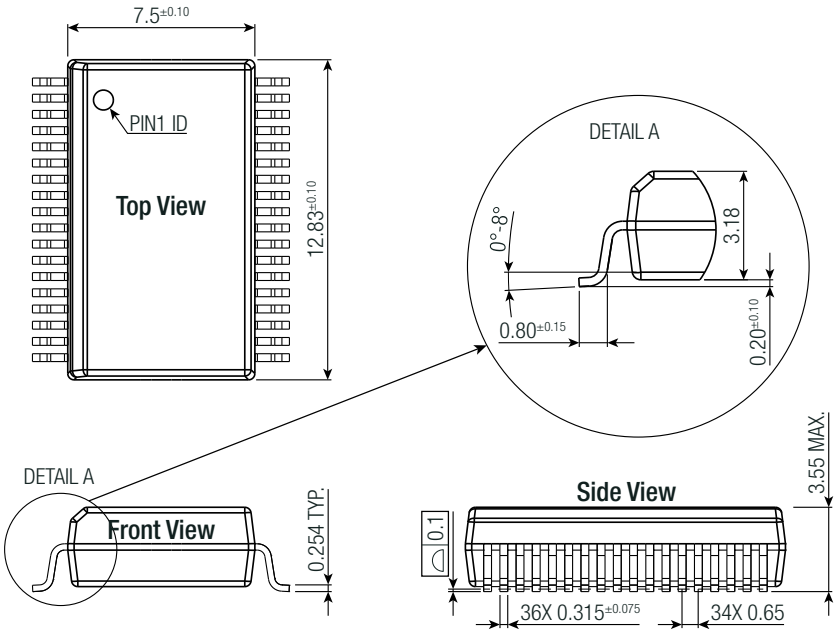

Recommended Footprint Details (Top View)

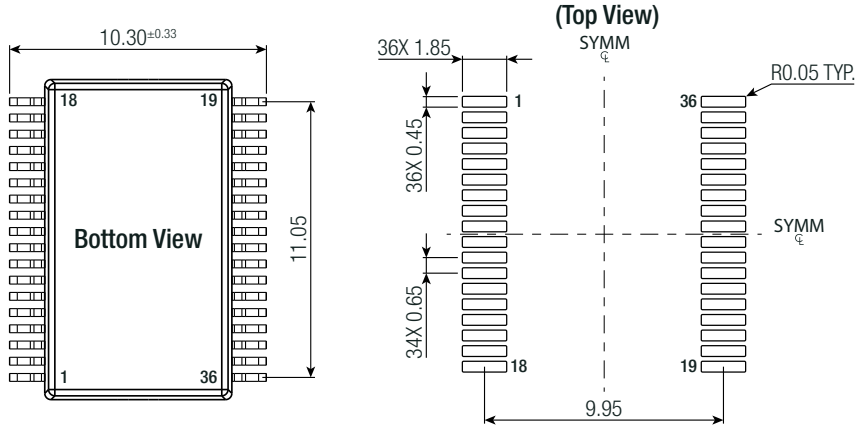

Tolerances:
x.x= ±0.1mm
x.xx= ±0.05mm

copyright © RECOM Power GmbH, all rights reserved

DIMENSION & PHYSICAL CHARACTERISTICS

Pad Information

Pad #	Function	Description
1, 2, 5, 8, 9, 10, 11, 12, 13, 14, 15, 16, 17, 18	PGND	Primary side power ground. Place several vias to copper pours for thermal relief.
3	PG	Power good open-drain output. Low when UVLO, OVLO, UVP, OVP, and OTP are not triggered.
4	CTRL	Pull high to enable the device. Connect to ground to disable the device.
6	AV_{IN}	Primary side analog input. Connect a 330pF ceramic capacitor between AV_{IN} and pin 5. Connect pin6 to pin7.
7	PV_{IN}	Primary side power input. Connect a 0.1µF and a 22µF ceramic capacitor to pin 8.
19, 20, 21, 22, 23, 24, 25, 26, 27, 30, 31, 36	V_{OUT-}	Secondary side negative output voltage.
28, 29	V_{OUT+}	Secondary side positive output voltage. Connect a 10µF and 0.1µF ceramic capacitor between V_{OUT+} and V_{OUT-}.
32	COM	Connect current limiting resistor to COM node of circuit. See application example or **„Defining RLIM“** section.
33	FBV_{OUT-}	FBV_{OUT} Feedback (COM – V_{OUT-}) output voltage sense pin used to set the output (COM – V_{OUT-}) voltage.
34	FBV_{OUT+}	FBV_{OUT} Feedback (V_{OUT+} – V_{OUT-}) output voltage sense pin used to set the output (V_{OUT+} – V_{OUT-}) voltage.
35	FB_{COM}	Use as reference for FBV_{OUT+} and FBV_{OUT-}.

LAYOUT GUIDELINES

The R12C2T12/R integrated isolated power solution simplifies system design and reduces board area usage. Follow these guidelines for proper PCB layout to achieve optimal performance:

- Place decoupling capacitors as close as possible to the device pins. On the primary side, place the capacitors between pin 7 (power V_{IN}) and pins 8–18 (power GND). Optionally, place a capacitor between pin 6 (analog V_{IN}) and pins 1, 2, and 5 (analog GNDP). Always put lower values and smaller packages as close to the IC pins as possible.
- For the isolated secondary side, place the capacitors between pin 28, 29 (V_{OUT+}) and pins 19–25, 30–31, 35–36 (V_{OUT-}). Put capacitors between V_{OUT+} and V_{OUT-} close to the IC.
- The capacitors between V_{OUT+}/COM and COM/V_{OUT-} should be placed near the output device (gate driver input).
- Connection of Feedback circuit to FBCOM (pin 35) should be separated from V_{OUT-} plane. Use one short trace to connect this pin to the feedback low-side resistors. Place FB resistors and capacitors close to each other and close to the IC.
- Separate the traces from the COM pin and the FB_{Vout-} pin while routing. If possible, use a via near the FB_{Vout-} pin to route the feedback connection through a different layer.
- Sense connections should be connected to the capacitors at the output device (gate drivers).
- The package of the module dissipates heat through the GNDP and V_{OUT-} pins. Ensure sufficient copper around the IC, preferably connected to the ground plane through multiple vias, is present on the GNDP and V_{OUT-} pins. A minimum of four layers and using 2oz copper in internal layers are recommended for optimal thermal PCB design.
- We recommend connecting the V_{IN}, GND, V_{OUT+}, and V_{OUT-} pins to internal ground or power planes through multiple vias. Alternatively, make the traces connected to these pins as wide as possible to minimize losses.
- Pay close attention to the spacing between the primary side and the output signals on the outer layers of the PCB. The effective creepage and clearance of the system are reduced if the gap between the primary and isolated sides is smaller than that of the R12C2T12/R package pins. Avoid placing any traces under the module.

copyright © RECOM Power GmbH, all rights reserved

EMC FILTERING SUGGESTIONS ACCORDING TO EN55032

The successful EMC filtering of the R12C2T12/R requires the selection of suitable components, correct PCB layout, and mechanical shielding of the application where the module is used. Here are some additional notes for the PCB layout:

- Optionally, inner layers can be used to create a high-frequency bypass capacitor between GNDP and VOUT- to mitigate radiated emissions. Overlapping these layers can be beneficial for reducing radiated emissions. However, this solution might not be suitable for applications requiring fast dV/dt switching. Suitable core thickness and material can help set the correct minimum allowed capacitance between primary and secondary side.
- If the isolation requirements permit, place the internal ground power plane (GNDP) under the module package area. This can serve as partial shielding for the device, helping to reduce radiated emissions.
- If the primary side and isolated secondary output ground planes cannot overlap (as per previous notes), mechanical shielding may be necessary to meet EN55032 Class B requirements. We recommend connecting the metal shielded box to the primary GND.

DESIGN & LAYOUT EXAMPLE

This design is created for application with supply 21-27VIN and +15/-5V Output voltage.

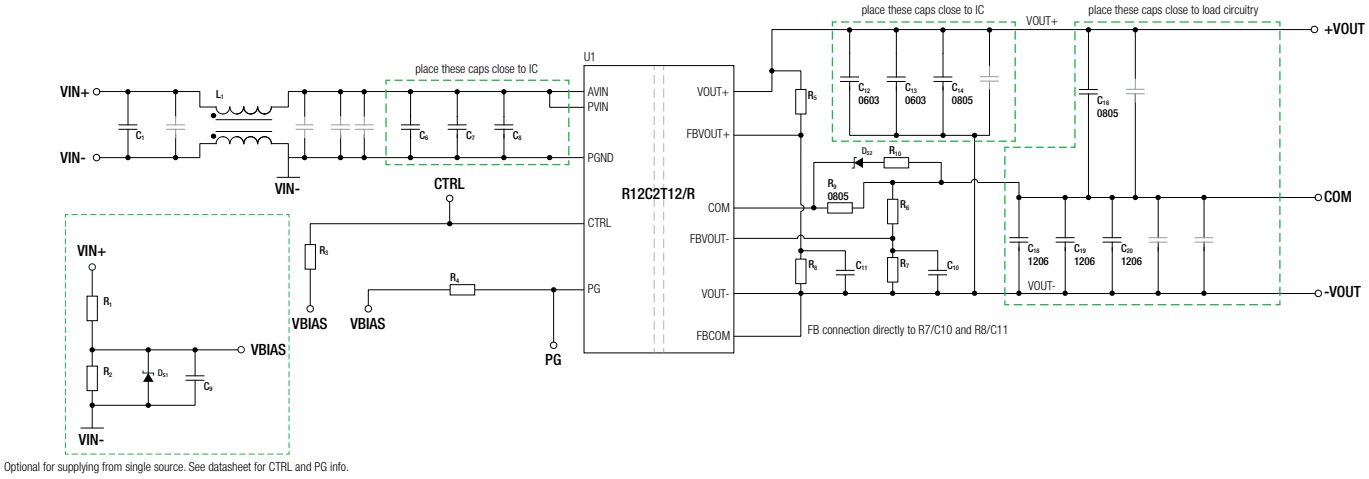

Note17: For different Output Voltage levels and setting correct resistor values

Spectrum Overview

Common mode LISN 15VIN, Full Load



copyright © RECOM Power GmbH, all rights reserved

DESIGN & LAYOUT EXAMPLE

Radiated Emissions

Common mode LISN 15VIN, Full Load

Full Load, No Shielding

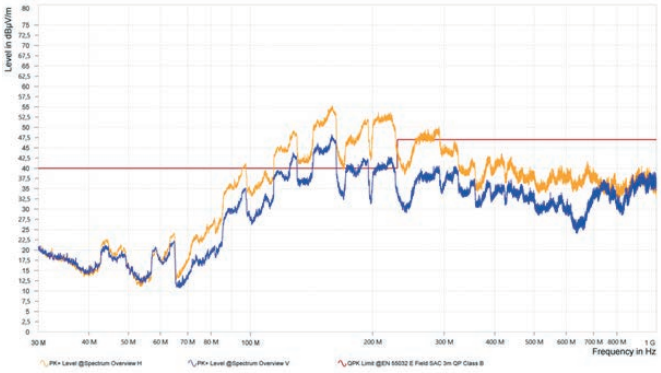

Full Load, Shielding in metal box connected to V_{IN-}

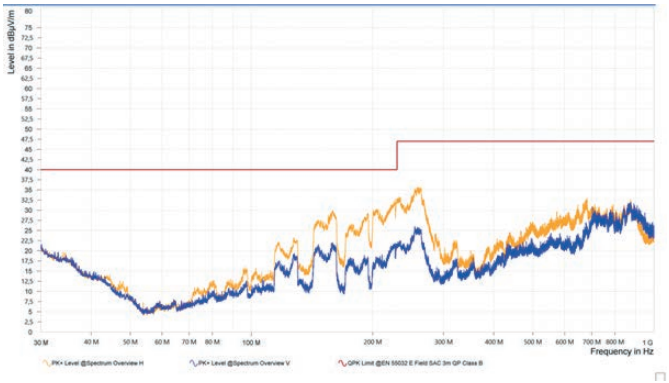

Top Layer

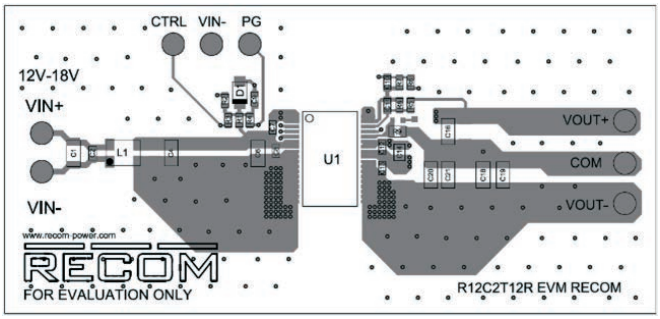

Inner Layer 1

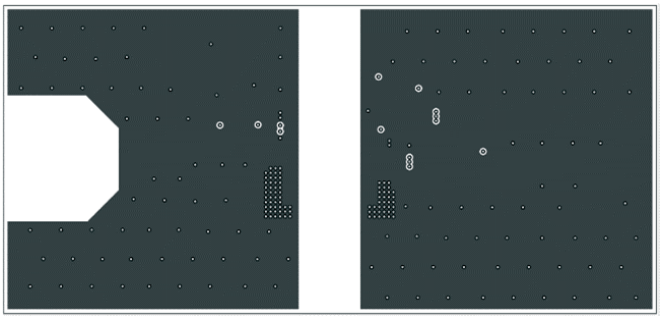

Inner Layer 2

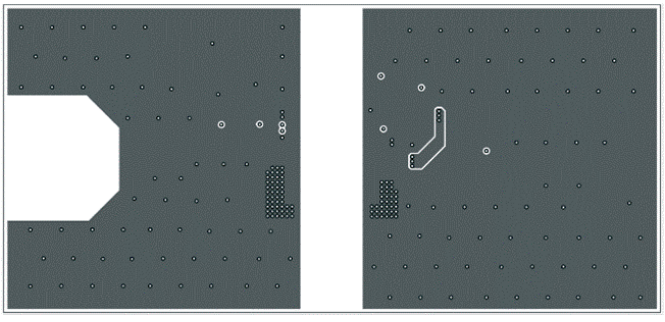

Bottom Layer

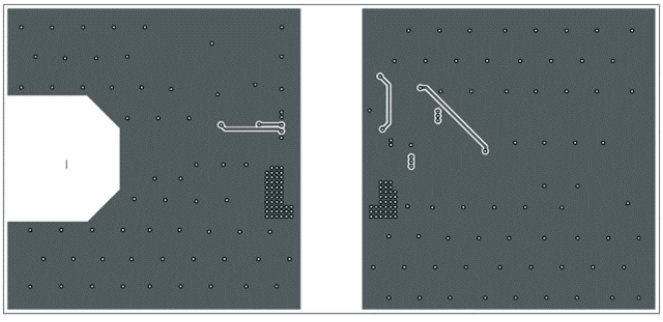

copyright © RECOM Power GmbH, all rights reserved

BOM

Designator	Description
C1, C6, C18, C19, C20	CAP,CER,X7R,10UF,50VDC,-10%,+10%,1206
C7, C9, C13	CAP,CER,X7R,100NF,100VDC,-10%,+10%,0603, CAP
C8, C10, C11	CAP,CER,X7R,330PF,50VDC,-10%,+10%,0603
C12	CAP,CER,C0G/NPO,100PF,50VDC,-5%,+5%,0603
C14	CAP,CER,X7R,2.2UF,50VDC,-10%,+10%,0805
C16	CAP,CER,X7R,4.7UF,50VDC,-10%,+10%,0805
D1	DIODE ZENER 5.1V 500MW SOD123
D2	DIODE SCHOTTKY 30V SOD523
L1	SMT Common Mode Line Filter 11uH 0.45A 1812
R1, R4	RES,DIS,THICK,100K,0.1W,1%,100PPM,0603
R2	RES,DIS,THIN,39K,0.1W,0.1%,25PPM,0603
R3	RES,DIS,THICK,4K7,0.1W,1%,100PPM,0603
R5	RES,DIS,THICK,68K1,0.1W,1%,100ppm,0603
R6	RES,DIS,THICK,10K,0.1W,1%,100ppm,0603
R7	RES,DIS,THICK,49K9,0.1W,1%,100ppm,0603
R8	RES,DIS,THICK,11K,0.1W,1%,100ppm,0603
R9	RES,DIS,THICK,220R,0.125W,1%,100ppm,0805
R10	RES,DIS,THICK,47R,0.1W,1%,100ppm,0603
U1	R12C2T12 1,5W, Isolated DCDC

PACKAGING INFORMATION

Parameter	Type		Value
Packaging Dimension (LxWxH)	Suffix -R: tape and reel	reel diameter + width	330.2mm + 24.4mm height 13inch + 0.96inch height
	Suffix -CT: moisture barrier bag		100 x 150 x 30 mm 3.94 x 5.90 x 1.18 inch
Packaging Quantity	Suffix -R: tape and reel		750pcs
	Suffix -CT: moisture barrier bag		10pcs
Storage Temperature Range			-40°C to +125°C
Storage Humidity	non-condensing		5% - 95% RH max.

The product information and specifications may be subject to changes even without prior written notice.The product has been designed for various applications; its suitability lies in the responsibility of each customer. The products are not authorized for use in safety-critical applications without RECOM's explicit written consent. A safety-critical application is an application where a failure may reasonably be expected to endanger or cause loss of life, inflict bodily harm or damage property. The applicant shall indemnify and hold harmless RECOM, its affiliated companies and its representatives against any damage claims in connection with the unauthorized use of RECOM products in such safety-critical applications.

copyright © RECOM Power GmbH, all rights reserved
www.recom-power.com