Features

Unregulated Converters

- Full power at 100°C ambient temperature
- 1kVDC/1s or 3kVDC/1s isolation option
- UL and EN certified, CB report
- Suitable for fully automated assembly (including vapor phase soldering)
- Optional continuous short circuit protection
- Efficiency up to 84%

RECOM
DC/DC Converter

R1S & R1D

1 Watt SMD Single and Dual Output

3 YEAR warranty

Description

The R1S and R1D converters are of the enclosed open frame type, i.e. they are not potted. The converters are typically used in general purpose and industrial low power isolation and voltage matching applications where an SMD converter is required. The converter series feature an extended ambient temperature operating range of -40°C to +100°C without derating and optional continuous short circuit protection. In addition to two isolation options and three different case formats, the converters are also available prepacked as tape and reel for use with automatic insertion machines.

Selection Guide

Part Number	nom. Input Voltage [VDC]	Output Voltage [VDC]	Output Current [mA]	Efficiency typ.(1) [%]	max. Capacitive Load(2) [µF]
R1S (3)-xx3.3 (4,5)	3.3, 5, 12, 15, 24	3.3	303	75	2200
R1S (3)-xx05 (4,5)	3.3, 5, 12, 15, 24	5	200	72-78	2200
R1S (3)-xx09 (4,5)	3.3, 5, 12, 15, 24	9	111	74-78	1000
R1S (3)-xx12 (4,5)	3.3, 5, 12, 15, 24	12	84	75-80	470
R1S (3)-xx15 (4,5)	3.3, 5, 12, 15, 24	15	66	75-82	470
R1S (3)-xx24 (4,5)	3.3, 5, 12, 15, 24	24	42	74-84	220
R1D (3)-xx3.3 (4,5)	3.3, 5, 12, 15, 24	±3.3	±152	75	±1000
R1D (3)-xx05 (4,5)	3.3, 5, 12, 15, 24	±5	±100	72-78	±1000
R1D (3)-xx09 (4,5)	3.3, 5, 12, 15, 24	±9	±56	74-78	±470
R1D (3)-xx12 (4,5)	3.3, 5, 12, 15, 24	±12	±42	75-80	±220
R1D (3)-xx15 (4,5)	3.3, 5, 12, 15, 24	±15	±33	75-82	±220
R1D (3)-xx24 (4,5)	3.3, 5, 12, 15, 24	±24	±21	74-84	±100

Notes:

Note1: Efficiency is tested at nominal input and full load at +25°C ambient

Note2: Max Cap Load is tested at nominal input and full resistive load and is defined as the capacitive load that will allow start up in under 1s without damage to the converter



Model Numbering

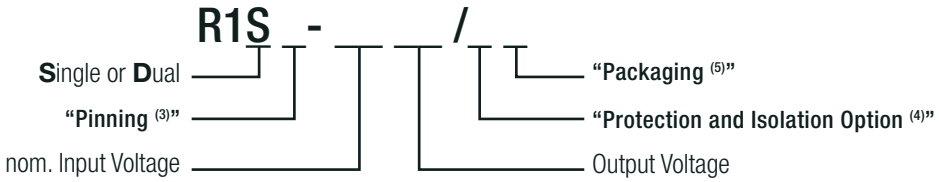

Notes:

Note3: R1S: without marking denotes 5 pins out of 8 fitted (includes /H option)
with marking "8" denotes 8 pins out of 8 fitted (/H option not available)
with marking "12" denotes 10 pins out of 12 fitted (includes /H option)
R1D: without marking denotes "6" pins out of 10 fitted (includes /H option)
with marking "10" denotes 10 pins out of 10 fitted (/H option not available)
with marking "12" denotes 10 pins out of 12 fitted (includes /H option)

Note4: standard part is without continuous short circuit protection
add suffix „/P" for continuous short circuit protection
add suffix „/H" for 3kVDC/1s isolation (not available for R1S8 and R1D10)
or add suffix „/HP" for 3kVDC/1s isolation and continuous short circuit protection

Note5: add suffix „-R" for tape and reel packaging (compatible with all other suffixes)

Ordering Examples:

R1S12-2405/P: Single Output, 10 pins out of 12 fitted, 24V Input, 5V Output with continuous short circuit protection
R1D10-0505-R: Dual Output, 10 pins fitted, 5V Input, 5V Output, tape and reel packaging
R1D-0505/HP: Dual Output, 5 pins out of 8 fitted, 5V Input, 5V Output with 3kVDC/1s isolation and continuous short circuit protection

RoHS 2+ compliant 10 from 10 · REACH compliant · c UL us E358085

UL60950-1 certified
CAN/CSA-C22.2 No. 60950-1-07 certified
IEC/EN60950-1 certified
EN55032 compliant
CB report

Specifications (measured @ Ta= 25°C, nom. Vin, full load and after warm-up unless otherwise stated)

BASIC CHARACTERISTICS

Parameter	Condition	Min.	Typ.	Max.
Internal Input Filter				capacitors
Input Voltage Range			±10%	
Minimum Load		0%		
Internal Operating Frequency		20kHz	60kHz	100kHz
Output Ripple and Noise	20MHz BW		50mVp-p	100mVp-p

Efficiency vs. Load

R1S-xx05

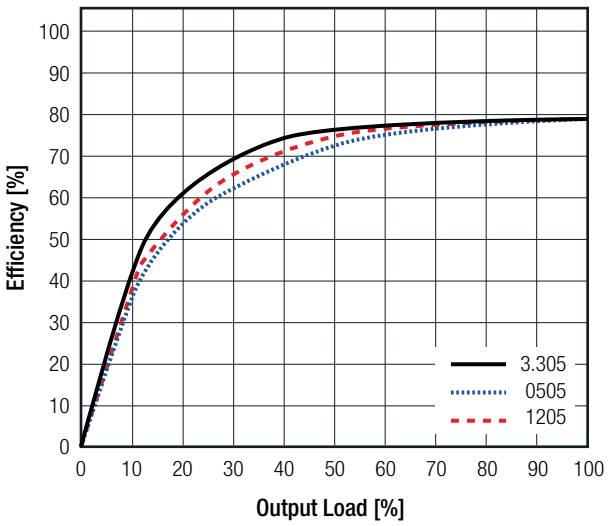

R1D-xx05

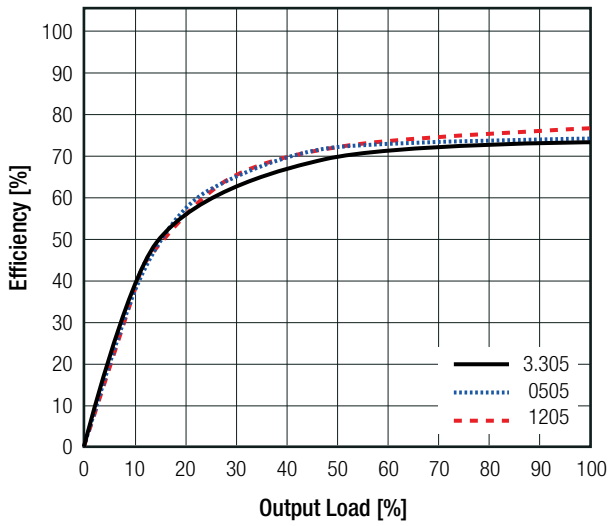

REGULATIONS

Parameter	Condition		Value
Output Accuracy			±2.0% typ. / ±5.0% max.
Line Regulation	low line to high line, full load		±1.2% of 1.0% Vin typ.
Load Regulation (6)	10% to 100% load	3.3Vout	15.0% typ. / 20.0% max.
		5Vout	12.0% typ. / 15.0% max.
		9Vout	7.0% typ. / 10.0% max.
		12, 15 & 24Vout	6.0% typ. / 10.0% max.

Notes:

Note6: Operation below 10% load will not harm the converter, but specifications may not be met

Tolerance Envelope

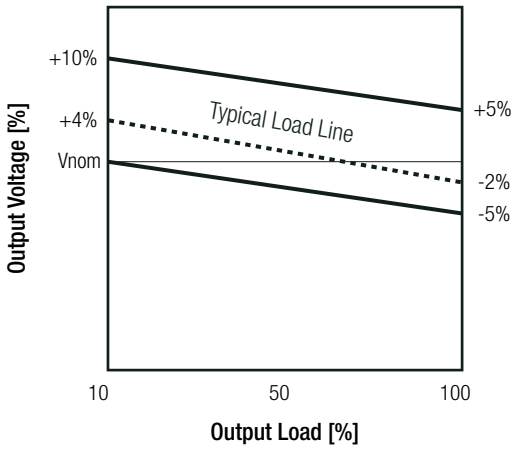

continued on next page

Specifications (measured @ Ta= 25°C, nom. Vin, full load and after warm-up unless otherwise stated)

Deviation vs. Load

R1S-xx05

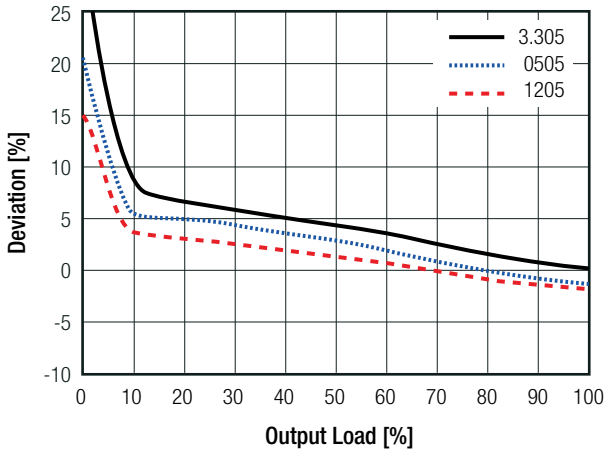

R1D-xx05

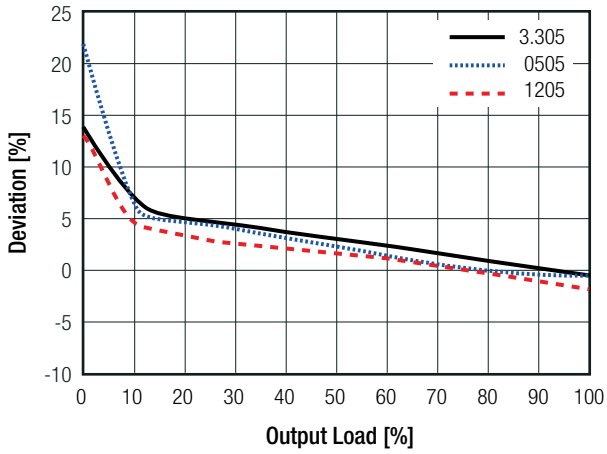

PROTECTIONS				
Parameter	**Type**			**Value**
Short Circuit Protection (SCP)	below 100mΩ	without suffix with suffix "/P"		1 second continuous
Isolation Voltage[7]	I/P to O/P	without suffix	tested for 1 second rated for 1 minute	1kVDC 500VAC/60Hz
		with suffix "/H"	tested for 1 second rated for 1 minute	3kVDC 1.5kVAC/60Hz
Isolation Resistance	Viso=500V			10GΩ min.
Isolation Capacitance	R1S, R1S8, R1D, R1D10 R1S12, R1D12			15pF min. / 70pF max. 10pF min. / 75pF max.
Insulation Grade	according to 60950-1			functional

Notes:

Note7: For repeat Hi-Pot testing, reduce the time and/or the test voltage

Note8: Refer to local safety regulations if input over-current protection is also required. Recommended fuse: slow blow type

ENVIRONMENTAL			
Parameter	**Condition**		**Value**
Operating Temperature Range	full load @ free air convection, refer to **"Derating Graph"**		-40°C to +100°C
Temperature Coefficient			±0.03%/K typ.
Operating Altitude	according to 60950-1		2000m
Operating Humidity	non-condensing		95% RH max.
Pollution Degree			PD2
MTBF	according to MIL-HDBK-217F, G.B.	+25°C +100°C	21400 x 10^3 hours 7800 x 10^3 hours

continued on next page

Specifications (measured @ Ta= 25°C, nom. Vin, full load and after warm-up unless otherwise stated)

Derating Graph
(@ Chamber and free air convection)

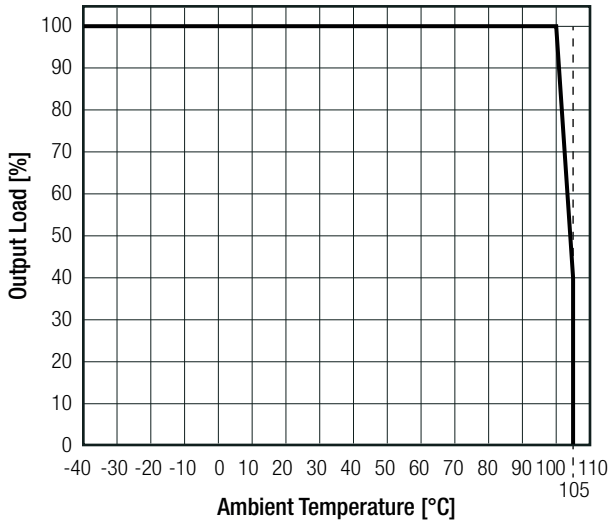

SAFETY AND CERTIFICATIONS

Certificate Type (Safety)	Report / File Number	Standard
Information Technology Equipment, General Requirements for Safety	E358085-A2-UL	UL60950-1, 2nd Edition:2007 CAN/CSA C22.2 No. 60950-1-07, 2nd Edition:2007
Information Technology Equipment, General Requirements for Safety	LVD1605077-08	IEC60950-1:2005, 2nd Edition + A2:2013 EN60950-1:2006 + A2:2013
Information Technology Equipment, General Requirements for Safety (CB Scheme)	E322406-A2-CB-1	IEC60950-1:2001, 1st Edition
Medical Electrical Equipment Part 1: General Requirements for Basic Safety and Essential Performance	SPC1005061	IEC60601-1:1988+A2:1995 EN60601-1:1990+A13:1996
EAC	RU-AT.49.09571	TP TC 004/2011
RoHS2		RoHS-2011/65/EU + AM-2015/863

EMC Compliance	Condition	Standard / Criterion
Electromagnetic compatibility of multimedia equipment -Emission requirements	with external filter (see filter suggestion below)	EN55032, Class A and B

EMC Filter Suggestion according to EN55032

R1S

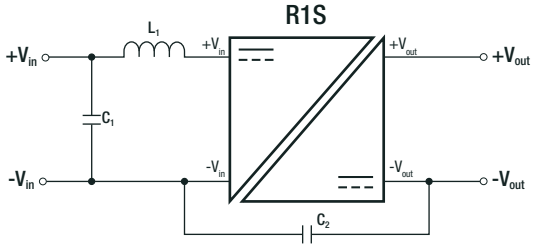

R1D

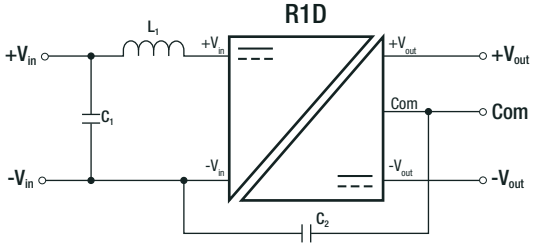

Component List Class A

MODEL	C1	L1	C2
R1S-1215	10µF 100V MLCC	N/A	N/A
R1S-1512			
R1S-243.3		3.9µH choke RLS-397	
R1S-3.324		N/A	
R1D-1215			
R1D-1512			
R1D-243.3		3.9µH choke RLS-397	
R1D-3.324		N/A	

Component List Class B

MODEL	C1	L1	C2
R1S-1215	10µF 100V MLCC	22µH RSL-226 choke	470pF/ 5KVDC
R1S-1512			
R1S-243.3			N/A
R1S-3.324			
R1D-1215			
R1D-1512			
R1D-243.3			
R1D-3.324			

Notes:

Note9: Filter suggestions are valid for indicated part numbers only. For other part numbers, please contact RECOM tech support for advice

Specifications (measured @ Ta= 25°C, nom. Vin, full load and after warm-up unless otherwise stated)

DIMENSION AND PHYSICAL CHARACTERISTICS

Parameter	Type	Value
Material	case	non-conductive black plastic (UL94 V-0)
Dimension (LxWxH)	R1S, R1S8 R1S12, R1D, R1D10, R1D12	12.75 x 10.7 x 7.0mm 15.24 x 10.7 x 7.0mm
Weight	R1S R1S8 R1S12, R1D, R1D10, R1D12	1.0g typ. 1.1g typ. 1.2g typ.

Dimension Drawing (mm)

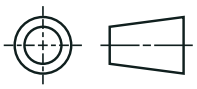

5 Pin Single SMD Package

/H option is available in this pin package

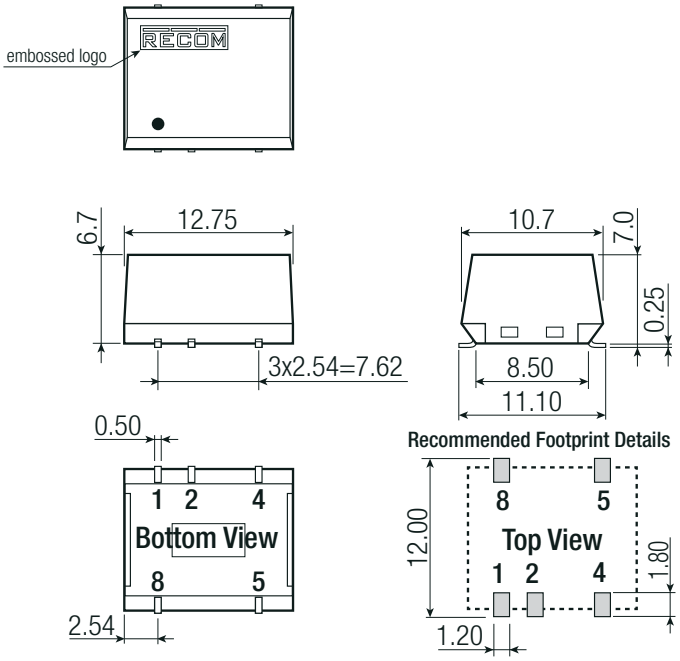

Pinning Information

Pin #	Single
1	-Vin
2	+Vin
4	-Vout
5	+Vout
8	NC

NC = No Connection
Tolerance:
xx.x= ±0.5mm
xx.xx= ±0.25mm

6 Pin Dual SMD Package

/H option is available in this pin package

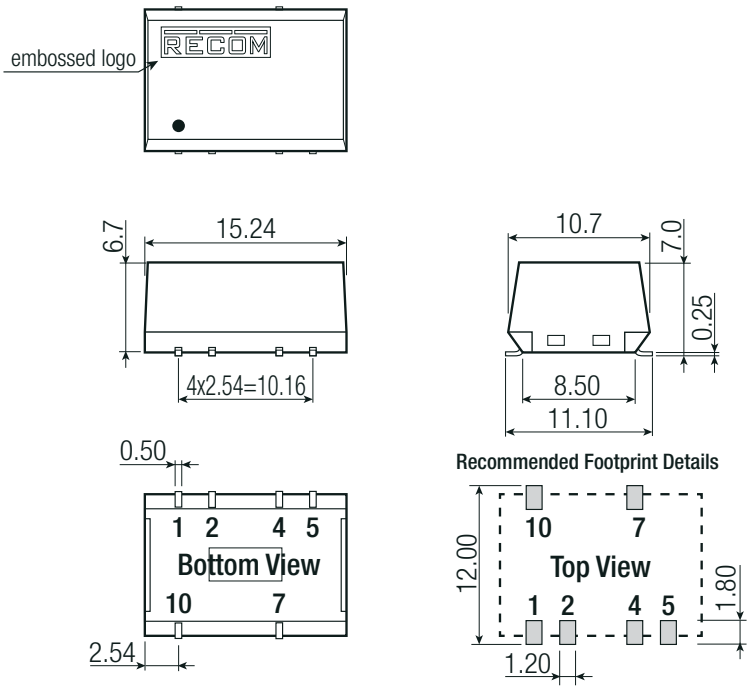

Pinning Information

Pin #	Dual
1	-Vin
2	+Vin
4	Com
5	-Vout
7	+Vout
10	NC

NC = No Connection
Tolerance:
xx.x= ±0.5mm
xx.xx= ±0.25mm

Specifications (measured @ Ta= 25°C, nom. Vin, full load and after warm-up unless otherwise stated)

Dimension Drawing (mm)

8 Pin Single SMD Package

/H option is not available in this pin package

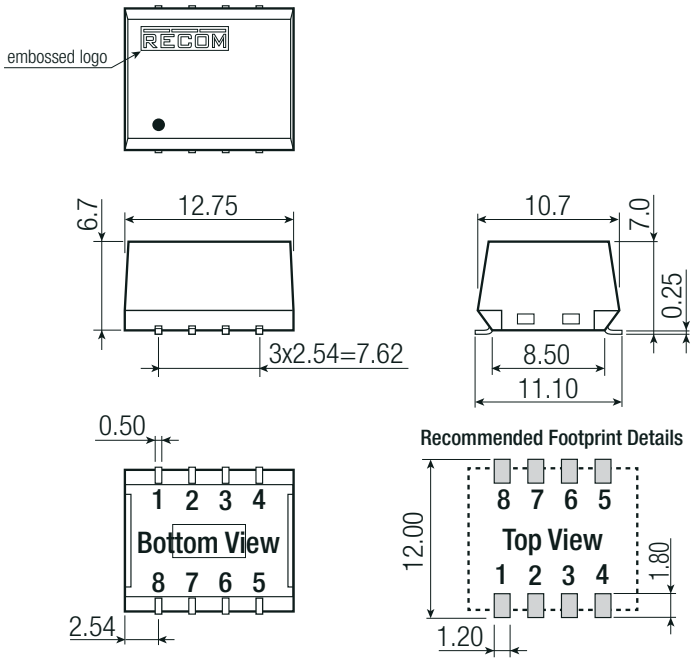

Pinning Information

Pin #	Single
1	-Vin
2	+Vin
3	NC
4	-Vout
5	+Vout
6, 7, 8	NC

NC = No Connection
Tolerance:
xx.x= ±0.5mm
xx.xx= ±0.25mm

10 Pin Dual SMD Package

/H option is not available in this pin package

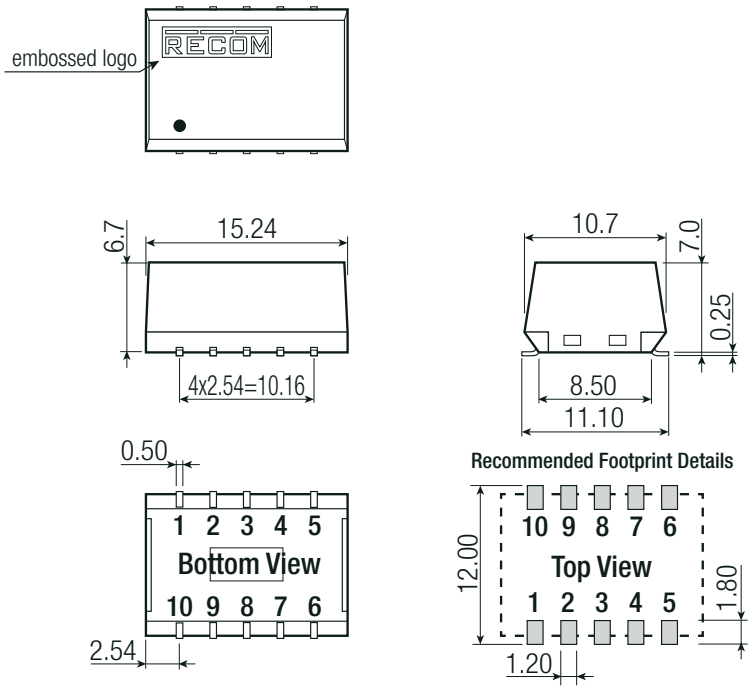

Pinning Information

Pin #	Dual
1	-Vin
2	+Vin
3	NC
4	Com
5	-Vout
6	NC
7	+Vout
8, 9, 10	NC

NC = No Connection
Tolerance:
xx.x= ±0.5mm
xx.xx= ±0.25mm

continued on next page

Specifications (measured @ Ta= 25°C, nom. Vin, full load and after warm-up unless otherwise stated)

Dimension Drawing (mm)

12 Pin Single and Dual SMD Package

/H option is available in this pin package

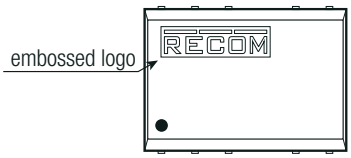

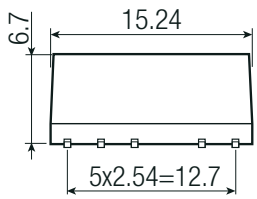

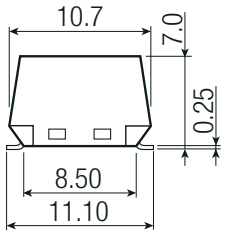

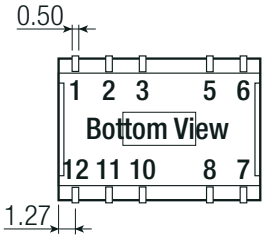

Recommended Footprint Details

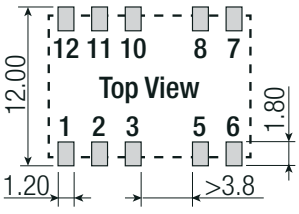

Pinning Information

Pin #	Single	Dual
1	-Vin	-Vin
2	+Vin	+Vin
3	NC	NC
5	-Vout	Com
6	NC	-Vout
7	NC	NC
8	+Vout	+Vout
10, 11, 12	NC	NC

NC = No Connection
Tolerance:
xx.x= ±0.5mm
xx.xx= ±0.25mm

PACKAGING INFORMATION			
Parameter	**Type**		**Value**
Packaging Dimension (LxWxH)	tube		530.0 x 17.0 x 14.0mm
	tape and reel (carton)		355.0 x 342.0 x 36.0mm
Packaging Quantity	tube	R1S, R1S8	40pcs
		R1S12, R1D, R1D10, R1D12	33pcs
	tape and reel		500pcs
Tape Width			24mm
Storage Temperature Range			-55°C to +125°C
Storage Humidity	non-condensing		95% RH max.

The product information and specifications may be subject to changes even without prior written notice.The product has been designed for various applications; its suitability lies in the responsibility of each customer. The products are not authorized for use in safety-critical applications without RECOM's explicit written consent. A safety-critical application is an application where a failure may reasonably be expected to endanger or cause loss of life, inflict bodily harm or damage property. The applicant shall indemnify and hold harmless RECOM, its affiliated companies and its representatives against any damage claims in connection with the unauthorized use of RECOM products in such safety-critical applications.