Features

Unregulated Converters

- 1:1 input range
- Efficiency up to 82%
- 1kVDC/1s or 2kVDC/1s isolation option
- Wide operating temperature range from -40°C to +100°C at full load
- UL60950-1 and IEC/EN60950-1 certified
- 1W SMD package

RECOM
DC/DC Converter

R1S/E

1 Watt SMD Single Output

3 YEAR Warranty

Description

The R1S/E series is an unregulated DC/DC converter in fully encapsulated open Frame package style. This series has been designed to offer exceptionally high efficiency at low loads and an extended operating temperature range. Uses include battery powered supplies, green energy applications and general isolating/converting DC power where board space and high efficiency is a premium.

Selection Guide

Part Number	nom. Input Voltage [VDC]	Output Voltage [VDC]	Output Current [mA]	Efficiency typ.(1) [%]	max. Capacitive Load(2) [µF]
R1S (3)-3.305/E (4,5)	3.3	5	200	81	2200
R1S (3)-0505/E (4,5)	5	5	200	81	2200
R1S (3)-1205/E (4,5)	12	5	200	82	2200
R1S (3)-2405/E (4,5)	24	5	200	80	2200



Notes:

Note1: Efficiency is tested at nominal input and full load at +25°C ambient

Note2: Max Cap Load is tested at nominal input and full resistive load and is defined as the capacitive load that will allow start up in under 1s without damage to the converter

Model Numbering

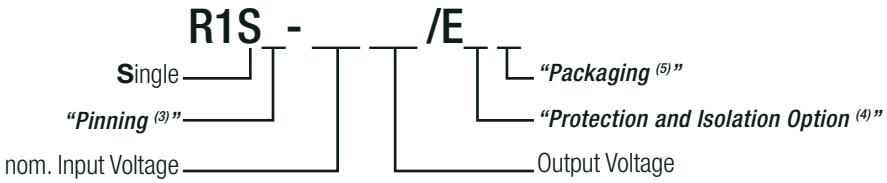

Notes:

Note3: without marking denotes 5 pins out of 8 fitted (includes /H option)
with marking "8" denotes 8 pins out of 8 fitted (/H option not available)

Note4: standard part is without continuous short circuit protection
add suffix „/P" for continuous short circuit protection
add suffix „/H" for 2kVDC/1s isolation (not available for R1S8)
or add suffix „/HP" for 2kVDC/1s isolation and continuous short circuit protection

Note5: add suffix „-R" for tape and reel packaging (compatible with all other suffixes)

Ordering Examples:

R1S8-3.305/E = Single Output, 8 pins out of 8 fitted, 3.3Vin, 5Vout
R1S-3.305/EH = Single Output, 5 pins out of 8 fitted, 3.3Vin, 5Vout with 2kVDC/1s isolation
R1S8-0505/EP = Single Output, 8 pins out of 8 fitted, 5Vin, 5Vout with continuous short circuit protection
R1S-0505/EHP-R = Single Output, 8 pins out of 8 fitted, 5Vin, 5Vout with 2kVDC/1s isolation, continuous short circuit protection and tape and reel packaging

RoHS 2 compliant 10 from 10
REACH compliant
c UL us E358085
EAC

UL60950-1 certified
CAN/CSA-C22.2 No. 60950-1-07 certified
IEC/EN60950-1 certified
EN55032 compliant

Specifications (measured @ Ta= 25°C, nom. Vin, full load and after warm-up unless otherwise stated)

BASIC CHARACTERISTICS

Parameter	Condition	Min.	Typ.	Max.
Input Voltage Range			±10%	
Minimum Load [5]		0%		
Internal Operating Frequency		20kHz		90kHz
Output Ripple and Noise	20MHz BW		50mVp-p	100mVp-p

Efficiency vs. Load

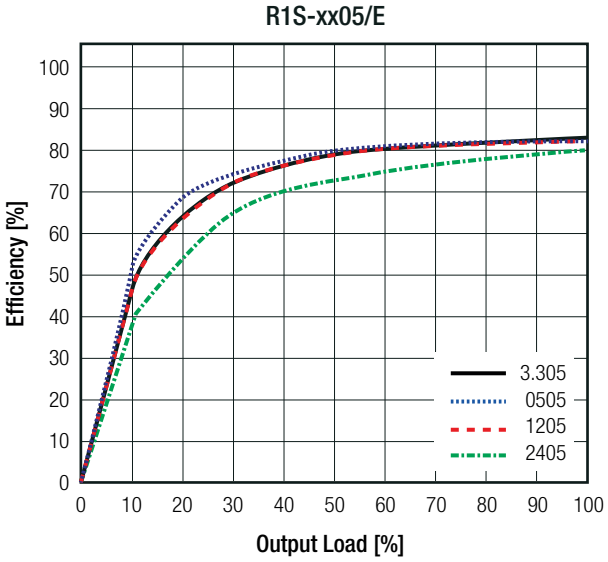

REGULATIONS

Parameter	Condition	Value
Output Accuracy		±5.0% max.
Line Regulation	low line to high line, full load	±1.2% typ.
Load Regulation	10% to 100% load	15.0% max.

Notes:

Note5: Operation below 10% load will not harm the converter, but specifications may not be met

Tolerance Envelope

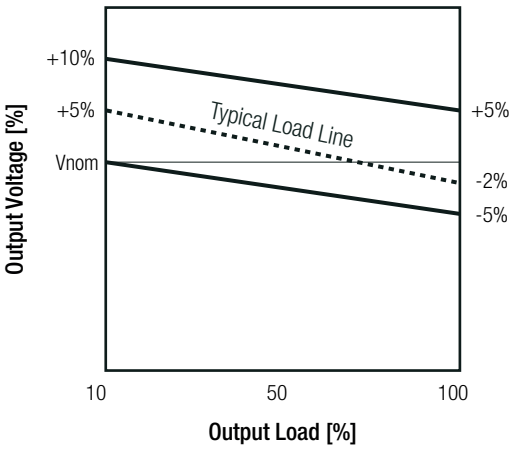

continued on next page

Specifications (measured @ Ta= 25°C, nom. Vin, full load and after warm-up unless otherwise stated)

Deviation vs. Load

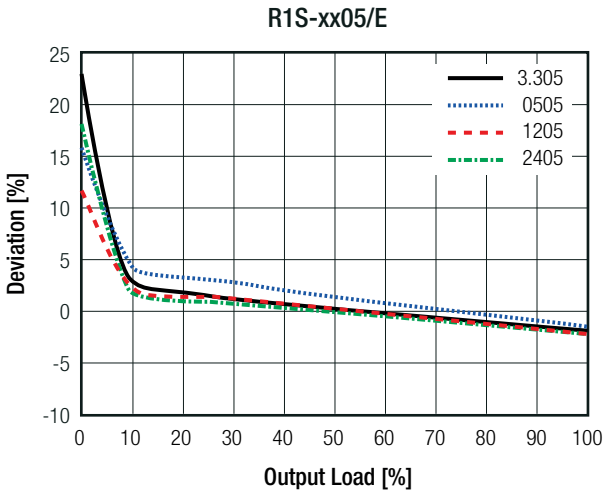

PROTECTIONS				
Parameter	**Type**			**Value**
Short Circuit Protection (SCP)	below 100mΩ	without suffix with suffix "/P"		1 second continuous
Isolation Voltage[7]	I/P to O/P	without suffix	tested for 1 second rated for 1 minute	1kVDC 500VAC/60Hz
		with suffix "/H"	tested for 1 second rated for 1 minute	2kVDC 1kVAC/60Hz
Isolation Resistance				10GΩ min.
Isolation Capacitance				75pF max.
Insulation Grade				functional

Notes:

Note7: For repeat Hi-Pot testing, reduce the time and/or the test voltage

Note8: Refer to local safety regulations if input over-current protection is also required. Recommended fuse: slow blow type

ENVIRONMENTAL			
Parameter	**Condition**		**Value**
Operating Temperature Range	full load @ free air convection, refer to ***"Derating Graph"***		-40°C to +100°C
Operating Altitude			2000m
Operating Humidity	non-condensing		95% RH max.
Pollution Degree			PD2
MTBF	according to MIL-HDBK-217F, G.B.	+25°C +100°C	3459 x 10^3 hours 756 x 10^3 hours

continued on next page

Specifications (measured @ Ta= 25°C, nom. Vin, full load and after warm-up unless otherwise stated)

Derating Graph

(@ Chamber and free air convection)

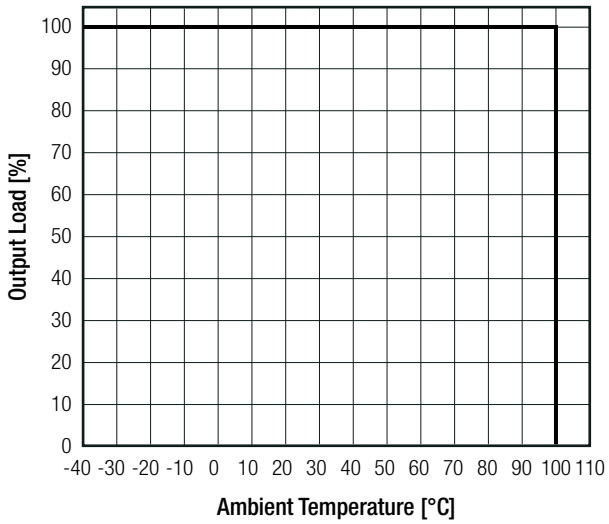

SAFETY AND CERTIFICATIONS		
Certificate Type (Safety)	**Report / File Number**	**Standard**
Information Technology Equipment, General Requirements for Safety	E358085-A2-UL	UL60950-1, 2nd Edition:2007 CAN/CSA C22.2 No. 60950-1-07, 2nd Edition:2007
Information Technology Equipment, General Requirements for Safety	LVD1605077-08	IEC60950-1:2005, 2nd Edition + A2:2013 EN60950-1:2006 + A2:2013
Medical electrical equipment Part 1: General requirements for basic safety and essential performance	WD-SE-R-180674-A0	EN60601-1:2006 + A12:2014 IEC60601-1:2005 + A1:2012, 3rd Edition
EAC	RU-AT.49.09571	TP TC 004/2011
RoHS2		RoHS-2011/65/EU + AM-2015/863

DIMENSION AND PHYSICAL CHARACTERISTICS		
Parameter	**Type**	**Value**
Material	case	non-conductive black plastic, (UL94 V-0)
Dimension (LxWxH)		12.75 x 10.7 x 6.7mm
Weight		1.0g typ.

continued on next page

Specifications (measured @ Ta= 25°C, nom. Vin, full load and after warm-up unless otherwise stated)

Dimension Drawing (mm)

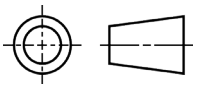

5 Pin Single SMD Package

/H option is available in these pin package

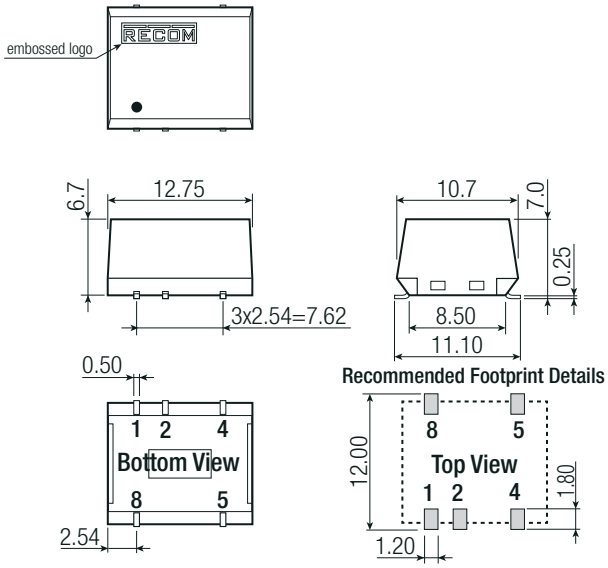

Pinning Information

Pin #	Single
1	-Vin
2	+Vin
4	-Vout
5	+Vout
8	NC

NC = No Connection
Tolerance:
xx.xx= ±0.25mm

8 Pin Single SMD Package

/H option is not available in these pin package

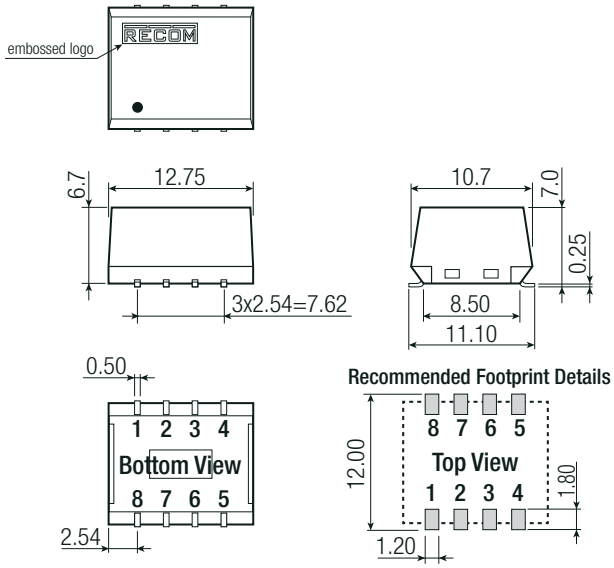

Pinning Information

Pin #	Single
1	-Vin
2	+Vin
3	NC
4	-Vout
5	+Vout
6	NC
7	NC
8	NC

NC = No Connection
Tolerance:
xx.xx= ±0.25mm

PACKAGING INFORMATION		
Packaging Dimension (LxWxH)	tube tape and reel (carton)	530.0 x 17.0 x 14.0mm 355.0 x 342.0 x 36.0mm
Packaging Quantity	tube tape and reel	40pcs 500pcs
Tape Width		24.0mm
Storage Temperature Range		-55°C to +125°C
Storage Humidity	non-condensing	95% RH max.

The product information and specifications may be subject to changes even without prior written notice.The product has been designed for various applications; its suitability lies in the responsibility of each customer. The products are not authorized for use in safety-critical applications without RECOM's explicit written consent. A safety-critical application is an application where a failure may reasonably be expected to endanger or cause loss of life, inflict bodily harm or damage property. The applicant shall indemnify and hold harmless RECOM, its affiliated companies and its representatives against any damage claims in connection with the unauthorized use of RECOM products in such safety-critical applications.