Technical Data Sheet

RACM16E-K/277 Series ◊ AC/DC Power Supply

16W ◊ Input: 100-277VAC

RECOM AC/DC Converter

FEATURES

- CV/CC: constant voltage; constant current limited
- 100-277VAC input range with full load up to 65°C
- -40°C to +85°C operating temperature ratings
- OVC III rated up to 3000m Altitude
- 2MOPP certified up to 4000m altitude
- EN55032 class “B” compliant @ floating load
- 3 years warranty



52.7 x 27.6 x 23.0mm (2.0 x 1.08 x 0.9 inch)
60g (0.04 lbs)

APPLICATIONS

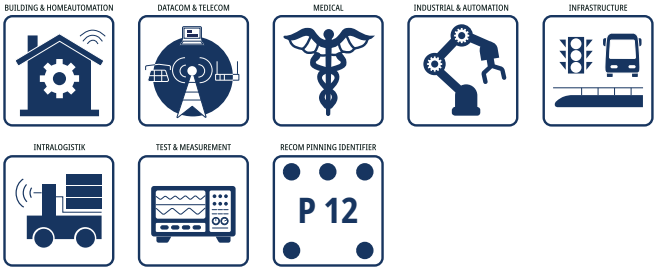

SAFETY & EMC

CE UKCA cULus E314885 IECEE CB SCHEME FC

HOUSEHOLD CERTIFIED EN-60335-1 | RoHS2 compliant 10 from 10 | Reach compliant

DESCRIPTION

The RACM16E series features a compact 1”x2” standard footprint with corresponding pinning [P12] or with stranded wires. The series operates with CV/CC constant current limited overcurrent protection, suitable for driving nonlinear loads. Designed for cost-effectiveness, these encapsulated modules deliver a full 16W output power at temperatures up to 65°C and accomodate extended nominal input voltage ratings from 100-277Vac with OVCIII conditions. With a safety agency-rated temperature range up to +85°C it ensures reliable performance. Certified with 2MOPP for altitudes up to 4000m.The series also meets touch current limits for BF usage in medical health care applications. Optimized for standby power usage the no load power consumption is less than 100mW. The power supplies hold international safety certifications conforming to industrial IEC62368 and IEC61558 standards, medical UL/IEC/EN60601 standards, and household EN60335 standards.

SELECTION GUIDE

Part Number	Input Voltage Range [VAC]	Output Voltage nom. [VDC]	Output Current max. [mA]	Efficiency (1) typ. [%]	Output Power max. [W]
RACM16E-3.3SK/277	85-305	3.3	3640	78	12
RACM16E-05SK/277 (2)	85-305	5	3200	82	16
RACM16E-12SK/277 (2)	85-305	12	1330	84.5	16
RACM16E-15SK/277	85-305	15	1066	85	16
RACM16E-24SK/277 (2)	85-305	24	667	86	16
RACM16E-30SK/277	85-305	30	533	86	16

Note1: Efficiency is tested at 230VAC and full load at +25°C ambient

copyright © RECOM Power GmbH, all rights reserved
www.recom-power.com

RACM16E-K/277 Series ◊ AC/DC Power Supply

16W ◊ Input: 100-277VAC

RECOM AC/DC Converter

Model Numbering

RACM16E-__ SK/277/__

- nom. Output Power
- Output Voltage
- Connection Options (2)
  - **S**ingle

Note2: "/277" only= THT printmount, encapsulated, potted
add suffix "/W" for wired version, encapsulated, potted (except 3.3, 15 & 30Vout)

BASIC CHARACTERISTICS (measured @ T_{AMB}= 25°C, nom. V_{IN}, full load and after warm-up unless otherwise stated)

Parameter	Condition		Min.	Typ.	Max.
Nominal Input Voltage	50/60Hz		100VAC		277VAC
Operating Range (3)	47-63Hz		85VAC		305VAC
	DC		120VDC		430VDC
Input Current	115/230/277VAC		200mA	250mA	450mA
Inrush Current	cold start at 25°C	115VAC			20A
		230VAC			30A
		277VAC			36A
No Load Power Consumption	30Vout			100mW	150mW
	others			75mW	100mW
Input Frequency Range	AC Input		47Hz		63Hz
Minimum Load			0%		
Power Factor	115VAC			0.6	
	230VAC			0.5	
	277VAC			0.45	
Start-up time					1500ms
Rise time					60ms
Hold-up time	230VAC		50ms		
Internal Operating Frequency					70kHz
Output Ripple and Noise (4)	20MHz BW	nom. V_{OUT}= 24VDC, 30VDC			1% Vout
		others			150mVp-p

Note3: The products were submitted to all safety files at AC-operation.
Note4: Measurements are made with a 0.1µF MLCC & 10µF E-cap in parallel across output (low ESR)

RACM16E-3.3SK/277 & RACM16E-05SK/277

RACM16E-3.3SK/277 = 12W max.

Efficiency vs Output Power

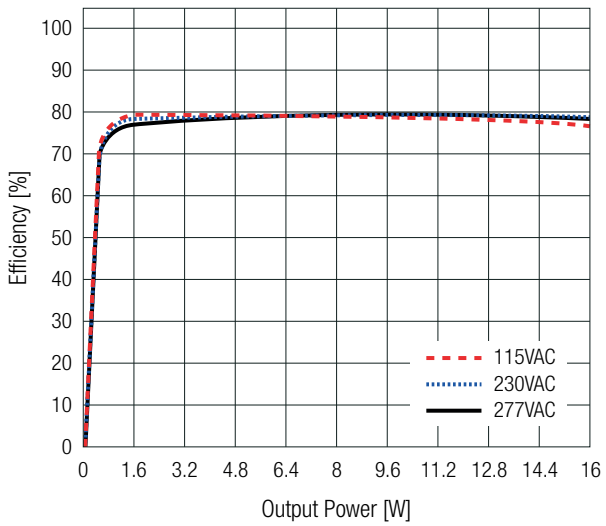

Power Dissipation vs. Output Power

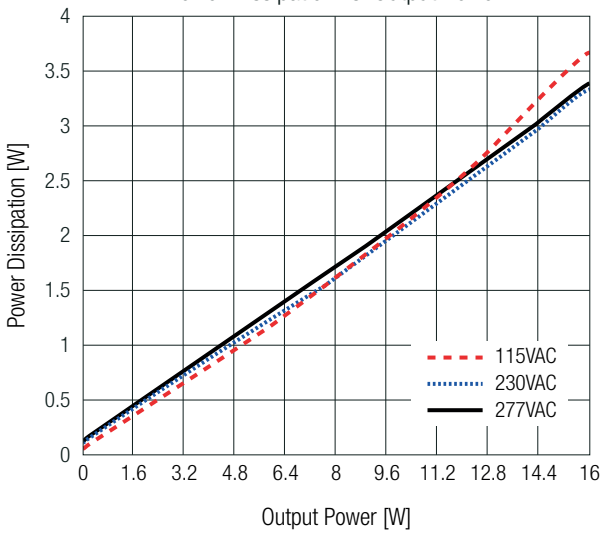

copyright © RECOM Power GmbH, all rights reserved

BASIC CHARACTERISTICS (measured @ T_{AMB}= 25°C, nom. V_{IN}, full load and after warm-up unless otherwise stated)

others

Efficiency vs Output Power

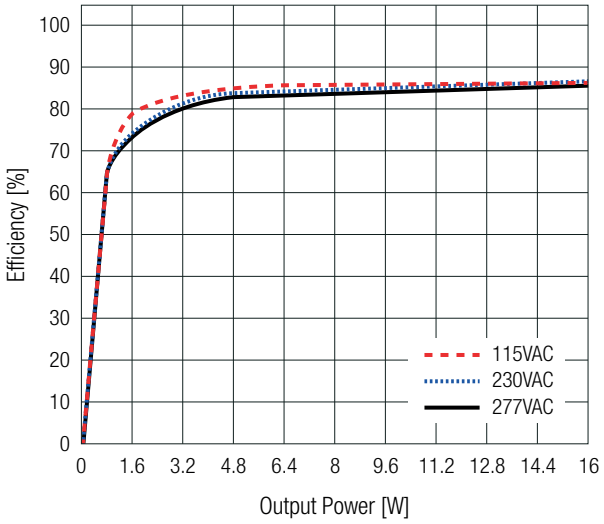

Power Dissipation vs. Output Power

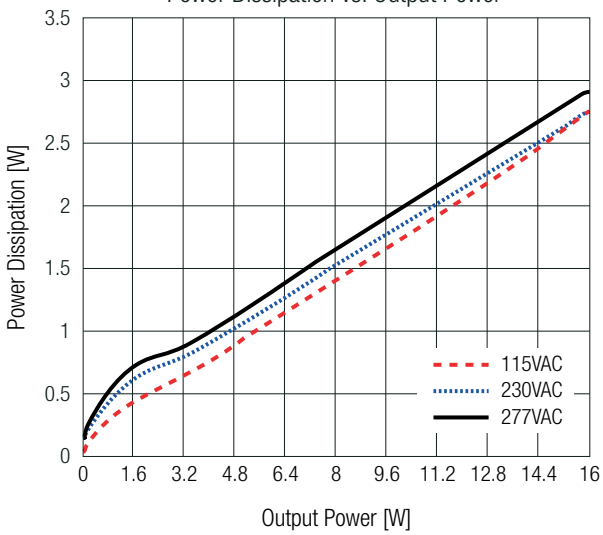

REGULATIONS (measured @ T_{AMB}= 25°C, nom. V_{IN}, full load and after warm-up unless otherwise stated)

Parameter	Condition		Value
Output Accuracy			±2.0% max.
Line Regulation	low line to high line, full load	RACM16E-3.3SK/277; RACM16E-05SK/277	±0.5% max.
		others	±0.2% max.
Load Regulation (5)	10% to 100% load		1.0% max.
Transient Response	25% load step change		4.0% max.
	recovery time		500µs typ.

Note5: Operation below 10% load will not harm the converter, but specifications may not be met

PROTECTIONS (measured @ T_{AMB}= 25°C, nom. V_{IN}, full load and after warm-up unless otherwise stated)

Parameter	Type		Value
Input Fuse (6)	internal		T2A, slow blow type
Limited Power Source (LPS)			yes
Short Circuit Protection (SCP)	below 100mΩ		hiccup mode; auto recovery
Over Load Protection	refer to **„Output Voltage vs. Output Current“**		constant current limitation until hiccup mode
Over Voltage Protection (OVP)			120% - 195%, hiccup mode
Over Voltage Category (OVC)	according to 62368-1, 60601-1 (2MOPP)		OVC II (5000m)
	according to 62368-1, 60601-1 (2MOOP)		OVC III (4000m)
	according to 61558, 60335-1		OVC III (3000m)
Class of Equipment			Class II
Isolation Voltage (7)	I/P to O/P; 1 minute	according to 61558	4.2kVAC
		according to 62368-1	6kVDC
Isolation Resistance	V_{ISO}=500VDC		1GΩ min.
Isolation Capacitance	I/P to O/P, 100kHz/0.1V		100pF max.
Insulation Grade	I/P to O/P		reinforced
Means of Protection	according to 60601-1		2MOPP (OVC II)
			2MOOP (OVC III)
Medical Device Classification	built-in power supply		designed to support type BF applications
Touch Current	264VAC/63Hz	normal condition	<100µA
		single fault	<500µA

Note6: For system integration with DC operation, consider a suitable DC fuse in front of the input
Note7: For repeat Hi-Pot testing, reduce the time and/or the test voltage

copyright © RECOM Power GmbH, all rights reserved

PROTECTIONS (measured @ T_{AMB}= 25°C, nom. V_{IN}, full load and after warm-up unless otherwise stated)

Output Voltage vs. Output Current

RACM16E-3.3SK/277

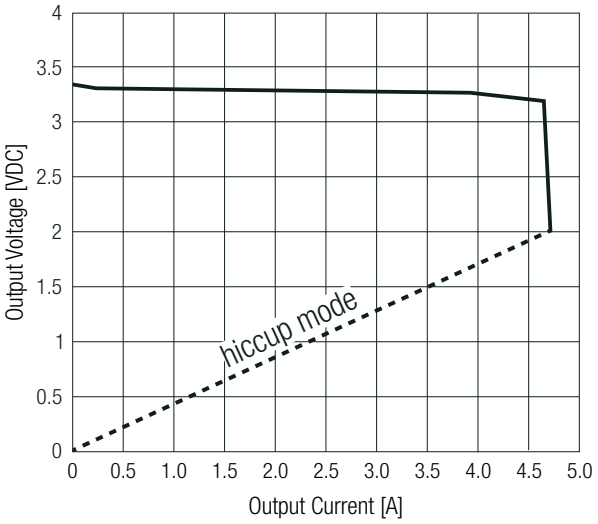

RACM16E-05SK/277

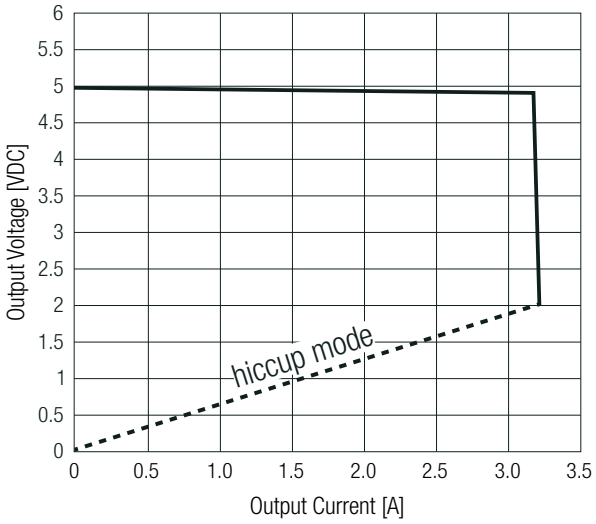

RACM16E-12SK/277

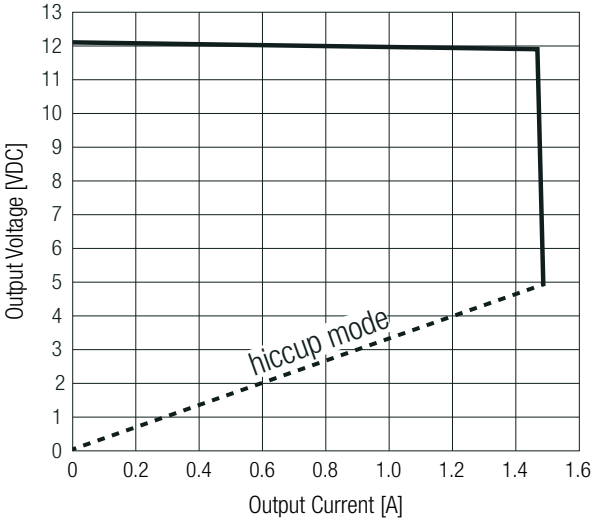

RACM16E-15SK/277

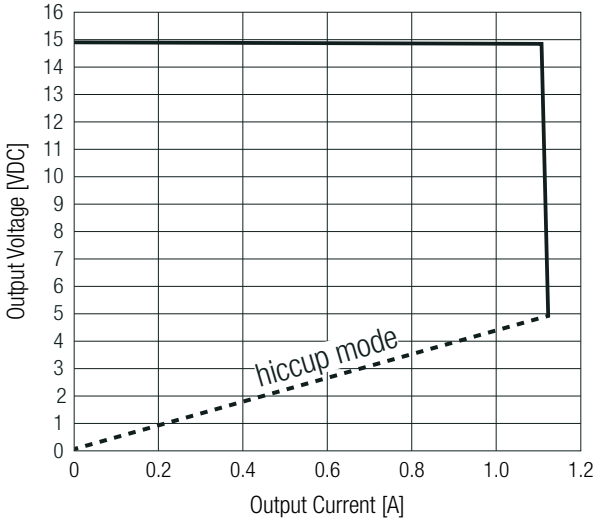

RACM16E-24SK/277

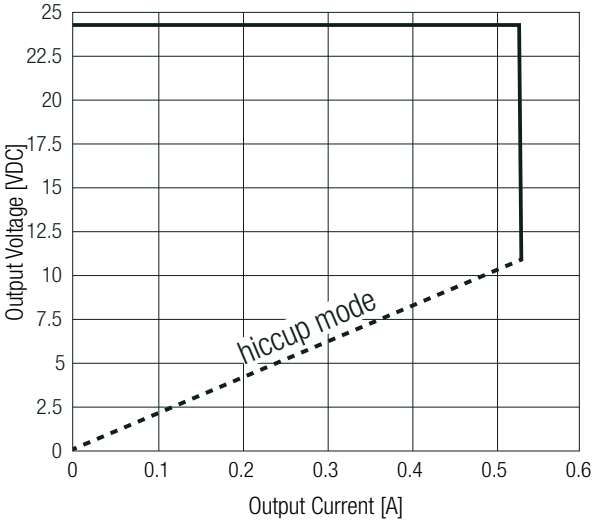

RACM16E-30SK/277

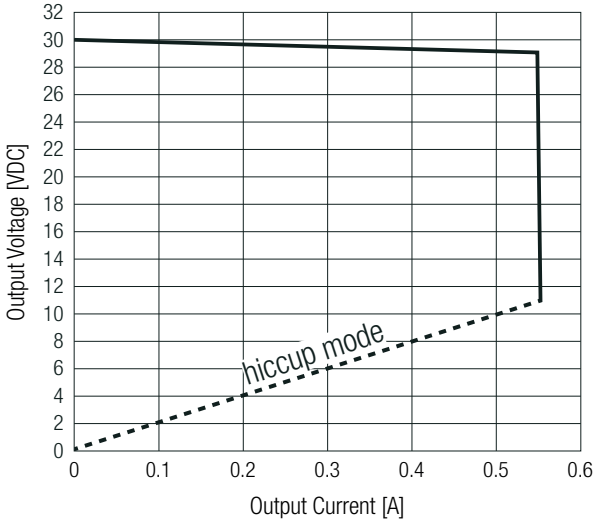

copyright © RECOM Power GmbH, all rights reserved

RACM16E-K/277 Series ◊ AC/DC Power Supply

16W ◊ Input: 100-277VAC

RECOM AC/DC Converter

ENVIRONMENTAL (measured @ T_{AMB}= 25°C, nom. V_{IN}, full load and after warm-up unless otherwise stated)

Parameter	Condition		Value
Operating Ambient Temperature Range	@ natural convection (0.1m/s)	refer to **„Derating Graph“**	-40°C to +65°C
Maximum Case Temperature			+110°C
Temperature Coefficient			±0.02%/K
Operating Altitude [8]	according to 62368-1, 60601-1		5000m (OVC II)
	according to 62368-1		4000m (OVC III)
	according to 61558-2-16, 60335-1		3000m (OVC III)
Operating Humidity	non-condensing		90% RH max.
Pollution Degree			PD2
Vibration	according to MIL-STD-202G		10-500Hz,10min.: 1cycle, period / 60min. each along x,y,z axes
MTBF	according to MIL-HDBK-217, G.B.	T_{AMB}= +25°C	1261 x 10^3 hours
		T_{AMB}= +40°C	1091 x 10^3 hours
Design Lifetime	230VAC and full load	T_{AMB}= +50°C	30 x 10^3 hours

Note8: Recognized by safety agency for safe operation up to 5000m. High altitude operation may impact the performance and lifetime. Please contact RECOM tech support for advice

Derating Graph

(@ Chamber and natural convection 0.1m/s) [9]

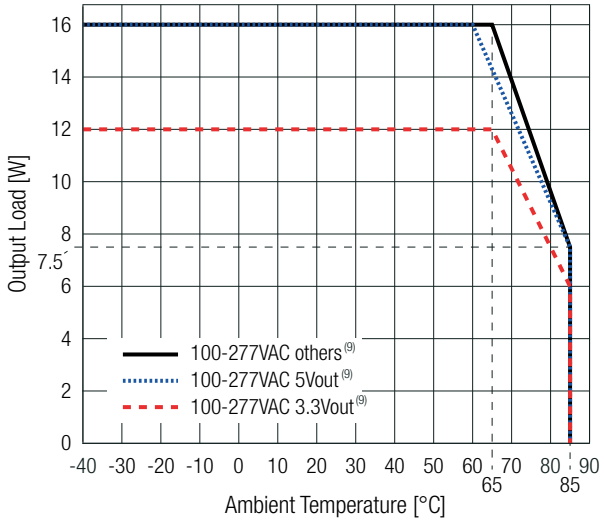

Note9: Nominal mains voltages are rated for tolerances of [nom. + ±10%]

SAFETY & CERTIFICATIONS

Certificate Type (Safety)	Report Number	Standard
Audio/Video, information and communication technology equipment - Part1: Safety requirements 3rd Edition (CB)	085-230123101-000	IEC62368-1:2018 3rd Edition
Audio/Video, information and communication technology equipment - Part1: Safety requirements 3rd Edition		EN IEC 62368-1:2020+A11:2020
Audio/Video, information and communication technology equipment - Part1: Safety requirements 2nd Edition (LVD)	64.210.23.01232.01	EN62368-1:2014+A11:2017
Medical electrical equipment Part 1: General requirements for basic safety and essential performance	E511305-D6002-UL	ANSI/AAMI ES60601-1:2005 + A2:2021 Edition 3.2 CAN/CSA-C22.2 No. 60601-1:14 A2:2022 Edition 3.2
Medical electrical equipment Part 1: General requirements for basic safety and essential performance (CB)	23SBDS03024-01721	IEC60601-1:2005 + AMD2:2020 Edition 3.2
Medical electrical equipment Part 1: General requirements for basic safety and essential performance		EN60601-1:2006 + A2:2021
Household and similar electrical appliances – Safety – Part 1: General requirements	64.260.23.01234.01	IEC60335-1:2010 + C1:2016 5th Edition EN60335-1:2012 + A15:2021
Measurement methods for electromagnetic fields of household appliances and similar apparatus with regard to human exposure		EN62233:2008+AC:2008
Safety of power transformers, power supplies, reactors and similar products for supply voltages up to 1100 V 3rd Edition (CB)	085-230123301-000	IEC61558-1:2017 3rd Edition

copyright © RECOM Power GmbH, all rights reserved

SAFETY & CERTIFICATIONS

Certificate Type (Safety)	Report Number	Standard
Safety of power transformers, power supplies, reactors and similar products for supply voltages up to 1100 V 3rd Edition (LVD)	64.250.23.01233.01	EN IEC 61558-1:2019
Safety of power transformers, power supplies, reactors and similar products for supply voltages up to 1100 V Part 2: Particular requirements (CB)	085-230123301-000	IEC61558-2-16:2009 + A1:2013 1st Edition
Safety of power transformers, power supplies, reactors and similar products for supply voltages up to 1100 V Part 2: Particular requirements (LVD)	64.250.23.01233.01	EN61558-2-16:2009 + A1:2013
RoHS2		RoHS 2011/65/EU + AM2015/863

EMC Compliance (EN60601-1-2)	Condition	Standard / Criterion
Medical electrical equipment Part 1-2: General requirements for basic safety and essential performance		EN60601-1-2:2015+A1:2021
ESD Electrostatic discharge immunity test	Air: ±2, 4, 8, 15kV Contact: ±8kV	IEC61000-4-2:2008 EN61000-4-2:2009
Radiated, radio-frequency, electromagnetic field immunity test	10 V/m (80-2700MHz), 27V/m (385MHz), 28V/m (450MHz), 9V/m (710, 745, 780MHz), 28V/m (810, 870, 930MHz), 28V/m (1720, 1845, 1970MHz), 28V/m (2450MHz), 9V/m (5240, 5500, 5785MHz)	IEC/EN61000-4-3:2066+A2:2010
Fast Transient and Burst Immunity	AC Port: L, N, L-N: 2kV	IEC/EN61000-4-4:2012
Surge Immunity	AC Port: L-N: ±0.5, 1, 2kV	IEC/EN61000-4-5:2014 + A1:2017
Immunity to conducted disturbances, induced by radio-frequency fields	3, 6Vrms (0.15-80MHz)	IEC61000-4-6:2013 EN61000-4-6:2014
Power Magnetic Field Immunity	30A/m	IEC61000-4-8:2009 EN61000-4-8:2010
Voltage Dips	100% (0.5P, 1.0P); 30%	IEC/EN61000-4-11:2004+A1:2017
Voltage Interruptions	100%	
Limits of Voltage Fluctuations & Flicker		EN61000-3-3:2013

EMC Compliance (EN61204-3)	Condition	Standard / Criterion
Low voltage power supplies, d.c. output Part 3: Electromagnetic compatibility (EMC)		EN IEC 61204-3:2018, Class B
ESD Electrostatic discharge immunity test	Air: ±2, 4, 8kV Contact: ±4kV	IEC61000-4-2:2008, Criteria A EN61000-4-2:2009, Criteria A
Radiated, radio-frequency, electromagnetic field immunity test	10V/m (80-1000MHz), 3V/m (1400-2000MHz), 1V/m (2000-2700MHz)	IEC/EN61000-4-3:2006 + A2:2010, Criteria A
Fast Transient and Burst Immunity	AC Port: L, N, L-N: 2kV	IEC/EN61000-4-4:2012, Criteria A
Surge Immunity	AC Port: L-N: ±1kV	IEC/EN61000-4-5:2014 + A1:2017, Criteria A
Immunity to conducted disturbances, induced by radio-frequency fields	10Vrms (0.15-80MHz)	IEC61000-4-6: 2013, Criteria A EN61000-4-6:2014, Criteria A
Power Magnetic Field Immunity	30A/m	IEC61000-4-8:2009, Criteria A EN61000-4-8:2010, Criteria A
Voltage Dips	100% (0.5P; 1.0P), 20%, 30%	IEC/EN61000-4-11:2004 + A1:2017, Criteria A
	60%	IEC/EN61000-4-11:2004 + A1:2017, Criteria B
Voltage Interruptions	100%	IEC/EN61000-4-11:2004 + A1:2017, Criteria B
Limits of Voltage Fluctuations & Flicker		EN61000-3-3:2013 + A1:2019

EMC Compliance (EN55032)	Condition	Standard / Criterion
Electromagnetic compatibility of multimedia equipment - Emission Requirements	O/P connected to GND: refer to: **„PELV installation“** and floating output; without external filter	EN55032:2015+A11:2020, Class B
Limitations on the amount of electromagnetic intererence allowed from digital and electronic devices		FCC 47 CFR Part 15 Subpart B, Class B

copyright © RECOM Power GmbH, all rights reserved

RACM16E-K/277 Series ◊ AC/DC Power Supply

16W ◊ Input: 100-277VAC

RECOM AC/DC Converter

SAFETY & CERTIFICATIONS

Suggested external filter for PELV installation (refer to **„EMC Compliance (EN55032)“**

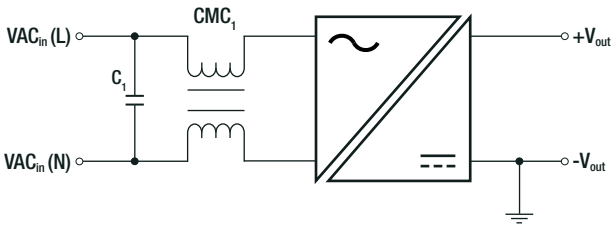

Component List

C_1	CMC_1
0.22µF	45mH: RACMC45-500/UF9.8 (coming soon)

DIMENSION & PHYSICAL CHARACTERISTICS

Parameter	Type	Value
Materials	case/baseplate	plastic, (UL94-V0)
	potting	PU, (UL94-V0)
	PCB	FR4, (UL94-V0)
Dimension (LxWxH)	THT printmount	52.7 x 27.6 x 23.0mm 2.0 x 1.08 x 0.9 inch
	“/W”	52.7 x 27.6 x 23.0mm 2.0 x 1.08 x 0.9 inch
Weight	THT printmount	60g typ. 0.13 lbs
	“/W”	65g typ. 0.14 lbs

Dimension Drawing THT printmount version (mm)

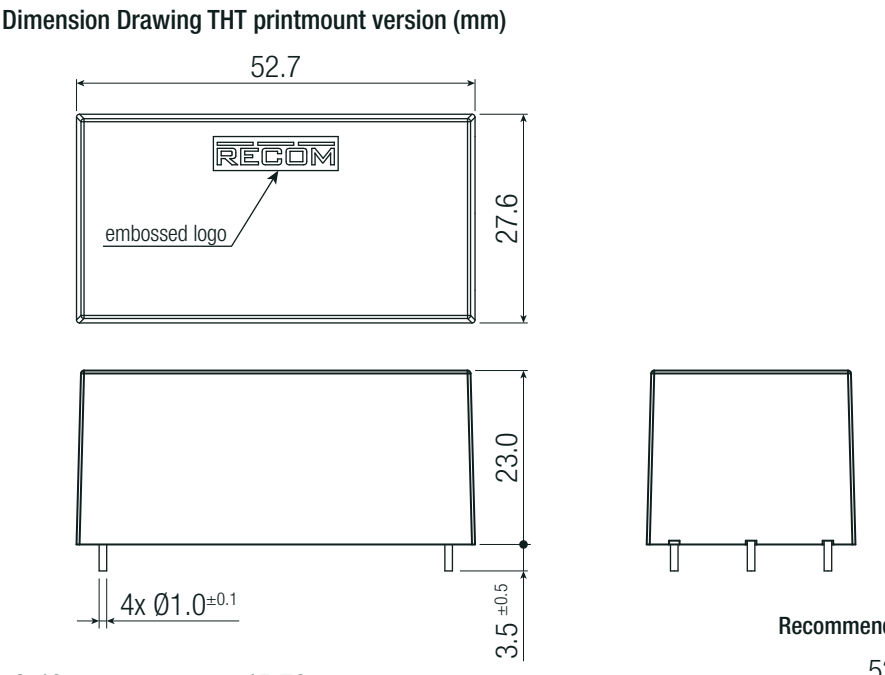

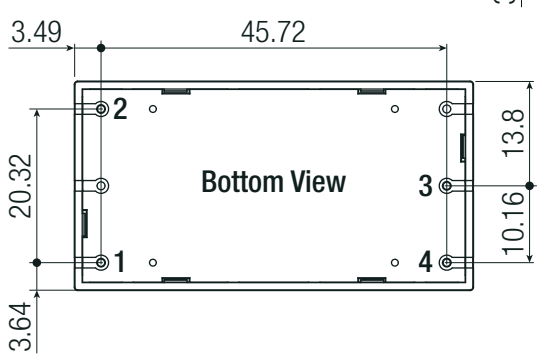

Pinning information [P12]

Pin #	Single
1	VAC in (N)
2	VAC in (L)
3	-Vout
4	+Vout

Recommended Footprint Detail

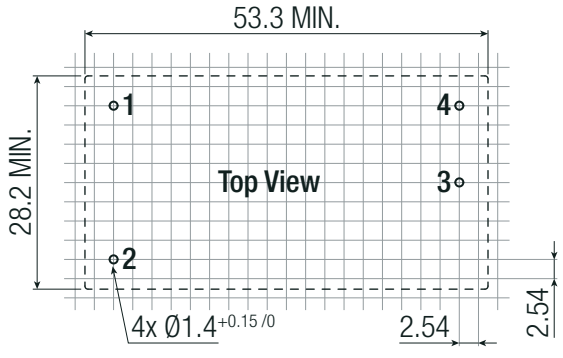

Tolerance: xx.x= ±0.5mm
xx.xx= ±0.25mm

copyright © RECOM Power GmbH, all rights reserved

RACM16E-K/277 Series ◊ AC/DC Power Supply

16W ◊ Input: 100-277VAC

RECOM AC/DC Converter

DIMENSION & PHYSICAL CHARACTERISTICS

Dimension Drawing "/277/W" version (mm)

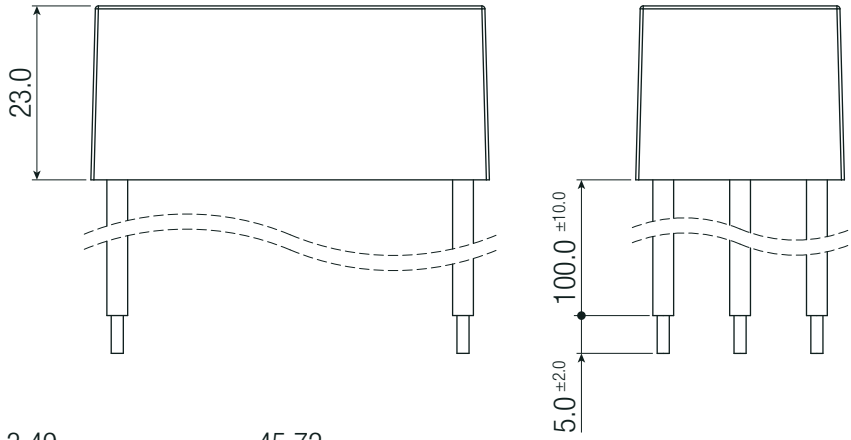

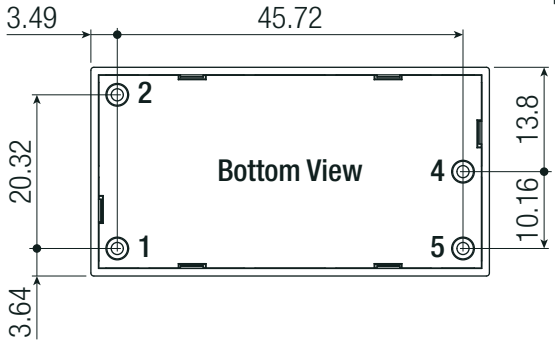

Wire information

#	Function	Wire color	Type	AWG
1	VAC in (N)	blue	UL-3266	18
2	VAC in (L)	brown	UL-3266	18
4	-Vout	black	UL-3266	18
5	+Vout	red	UL-3266	18

Tolerance: xx.x= ±0.5mm
xx.xx= ±0.25mm

BLOCK DIAGRAM

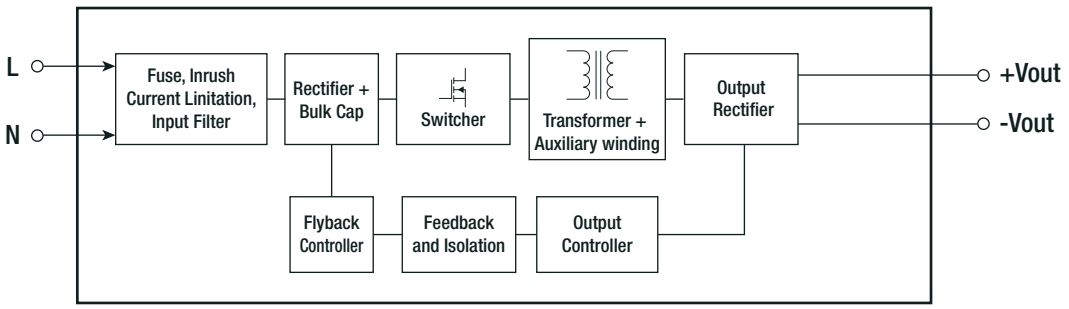

PACKAGING INFORMATION

Parameter	Type		Value
Packaging Dimension (LxWxH)	THT printmount	tube	490.0 x 56.0 x 40.0mm
	"/W"	tray	446.0 x 186.0 x 41.0mm
Packaging Quantity	THT printmount		15pcs
	"/W"		20pcs
Storage Temperature Range			-40°C to +90°C
Storage Humidity			95% RH max.

The product information and specifications may be subject to changes even without prior written notice.The product has been designed for various applications; its suitability lies in the responsibility of each customer. The products are not authorized for use in safety-critical applications without RECOM's explicit written consent. A safety-critical application is an application where a failure may reasonably be expected to endanger or cause loss of life, inflict bodily harm or damage property. The applicant shall indemnify and hold harmless RECOM, its affiliated companies and its representatives against any damage claims in connection with the unauthorized use of RECOM products in such safety-critical applications.

copyright © RECOM Power GmbH, all rights reserved
www.recom-power.com