Technical Data Sheet

REC10K-AW series ◊ Regulated DC-DC Converter

10W ◊ Isolated Output ◊ 4:1 Input

RECOM DC/DC Converter

FEATURES

- Industry standard 10W 1”x1” package
- Derates to 100°C ambient temperature
- Wide 4:1 input
- ON/OFF control pin, UVLO, SCP
- 3 year warranty



Dimensions (LxWxH): 25.4 x 25.4 x 10.2mm (1.0 x 1.0 x 0.40 inch)
15g (0.033 lbs)

APPLICATIONS



SAFETY & EMC

RoHS² compliant 10 from 10 | Reach compliant | cULus E224736 | IECEE CB SCHEME

DESCRIPTION

The REC10K-AW series are high power density, wide input voltage range 10W DC/DC converters in an industry standard 1”x1” case size. Despite their small size, the REC10K-AW converters are fully specified devices with output currents up to 2 amps, high efficiency, no minimum load, 1600VDC/1min isolation, tight regulation, and low ripple/noise figures. The outputs are also fully protected against short circuits, overcurrent, and overvoltage, and the single output version offers a ±10% trim range. These converters fit well in industrial applications where board space is at a premium.

SELECTION GUIDE

Part Number	Input Voltage Range [VDC]	nom. Output Voltage [VDC]	Output Current [mA]	Efficiency typ. [%]	max. Capacitive Load [µF]
REC10K-243.3SAW/H2	9-36	3.3	2000	79	5000
REC10K-2405SAW/H2	9-36	5	2000	83	4000
REC10K-2409SAW/H2	9-36	9	1111	85	2000
REC10K-2412SAW/H2	9-36	12	833	86	1000
REC10K-2415SAW/H2	9-36	15	667	87	1000
REC10K-2424SAW/H2	9-36	24	417	88	470
REC10K-2405DAW/H2	9-36	±5	±1000	83	±2000
REC10K-2412DAW/H2	9-36	±12	±417	85	±690
REC10K-2415DAW/H2	9-36	±15	±333	87	±540
REC10K-2424DAW/H2	9-36	±24	±208	86	±540
REC10K-483.3SAW/H2	18-75	3.3	2000	80	6000
REC10K-4805SAW/H2	18-75	5	2000	84	5000
REC10K-4809SAW/H2	18-75	9	1111	86	5000
REC10K-4812SAW/H2	18-75	12	833	86	5000

copyright © RECOM Power GmbH, all rights reserved

REC10K-AW Series ◊ Regulated DC-DC Converter

10W ◊ Isolated Output ◊ 4:1 Input

RECOM DC/DC Converter

SELECTION GUIDE

Part Number	Input Voltage Range [VDC]	Output Voltage [VDC]	Output Current [mA]	Efficiency typ. [%]	max. Capacitive Load [µF]
REC10K-4815SAW/H2	18-75	15	667	87	2500
REC10K-4824SAW/H2	18-75	24	417	85	2000
REC10K-4805DAW/H2	18-75	±5	±1000	84	±4000
REC10K-4812DAW/H2	18-75	±12	±417	86	±3000
REC10K-4815DAW/H2	18-75	±15	±333	84	±1500
REC10K-4824DAW/H2	18-75	±24	±208	84	±740

Note1: Efficiency is tested at nominal input and full load at +25°C ambient
Note2: Max Cap Load is tested at nominal input and full resistive load

MODEL NUMBERING



BASIC CHARACTERISTICS (measured @ T_{AMB}= 25°C, nom. V_{IN}, full load and after warm-up unless otherwise stated)

Parameter	Condition			Min.	Typ.	Max.
Internal Input Filter						Pi type
Input Voltage Range	nom. V_{IN}= 24VDC			9VDC		36VDC
	nom. V_{IN}= 48VDC			18VDC		75VDC
Input Under Voltage Lockout (UVLO)	nom. V_{IN}= 24VDC		DC-DC ON	8VDC		9VDC
			DC-DC OFF	7VDC		7.5VDC
	nom. V_{IN}= 48VDC		DC-DC ON	16VDC		18VDC
			DC-DC OFF	14VDC		15VDC
Input Current	nom. V_{IN}= 24VDC				500mA	
	nom. V_{IN}= 48VDC				300mA	
Quiescent Current					5mA	
Output Voltage Trimming	single output only, refer to **„Output Voltage Trimming“**			-10%		+10%
Minimum Load				0%		
Start-up time	REC10K-243.3SAW/H2; REC10K-2405SAW/H2; REC10K-483.3SAW/H2; REC10K-4805SAW/H2; REC10K-2405DAW/H2; REC10K-4805DAW/H2				10ms	20ms
	others				15ms	20ms
ON/OFF CTRL	DC-DC ON					Open or V_{CTRL} >1.5VDC
	DC-DC OFF					Short to -V_{IN} or <1.5VDC
Input Current of CTRL Pin	DC-DC ON					100µA
Standby Current	DC-DC OFF				50µA	
Internal Operating Frequency						350kHz
Output Ripple and Noise [3]	20MHz BW	nom. V_{IN}= 24VDC	single output		200mVp-p	
			dual output		150mVp-p	
		nom. V_{IN}= 48VDC	single output		150mVp-p	
			dual output		100mVp-p	

Note3: Measurements are made with a 0.1µF MLCC & 10µF E-cap in parallel across output. (low ESR)
The test setup can have an impact on ripple noise values (placement of scope probe, capacitors, it's specifications, wires, PCB tracks, distances, etc.)

copyright © RECOM Power GmbH, all rights reserved

BASIC CHARACTERISTICS (measured @ T_{AMB}= 25°C, nom. V_{IN}, full load and after warm-up unless otherwise stated)

Efficiency vs. Load

REC10K-2405SAW/H2

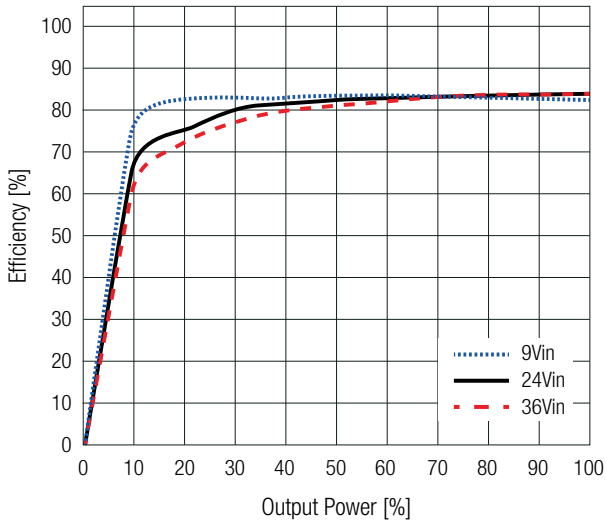

REC10K-4805SAW/H2

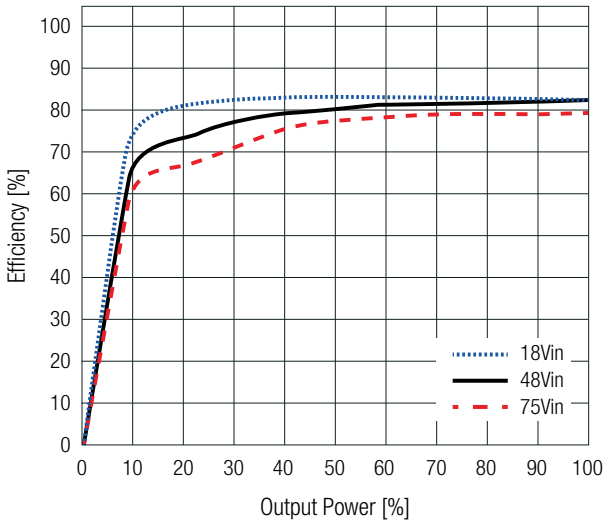

REC10K-2412SAW/H2

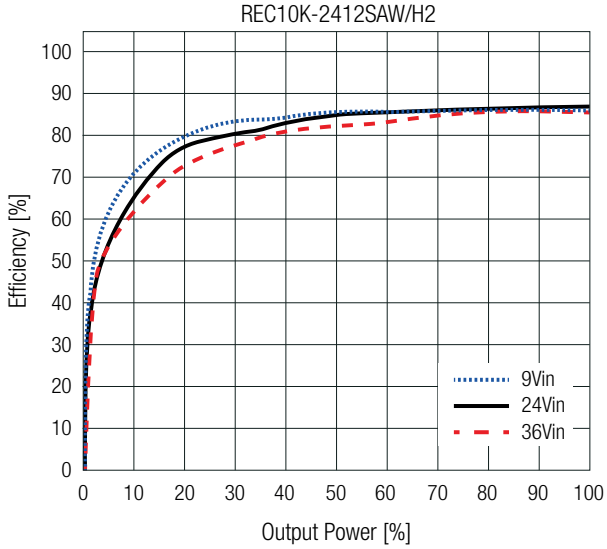

REC10K-4812SAW/H2

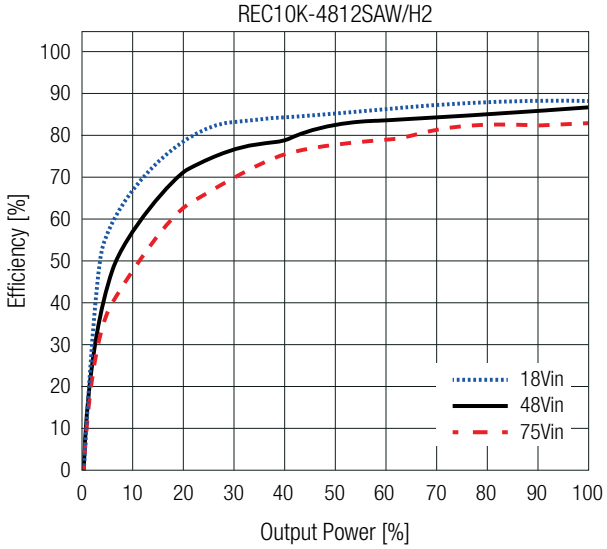

REC10K-2424SAW/H2

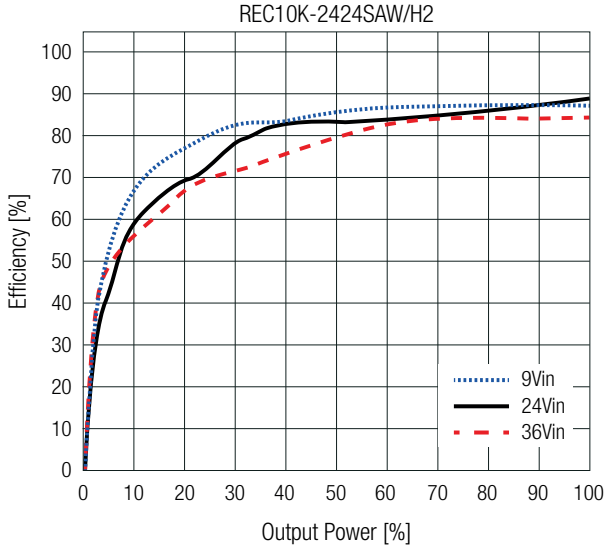

REC10K-4824SAW/H2

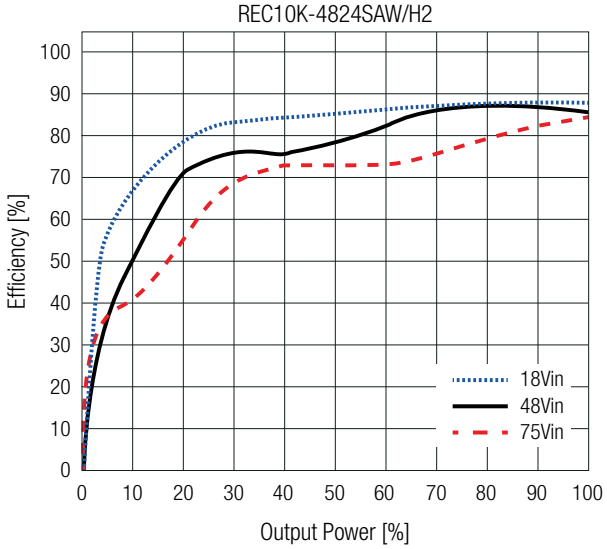

copyright © RECOM Power GmbH, all rights reserved

REC10K-AW Series ◊ Regulated DC-DC Converter

10W ◊ Isolated Output ◊ 4:1 Input

RECOM DC/DC Converter

BASIC CHARACTERISTICS (measured @ T_{AMB}= 25°C, nom. V_{IN}, full load and after warm-up unless otherwise stated)

Efficiency vs. Load

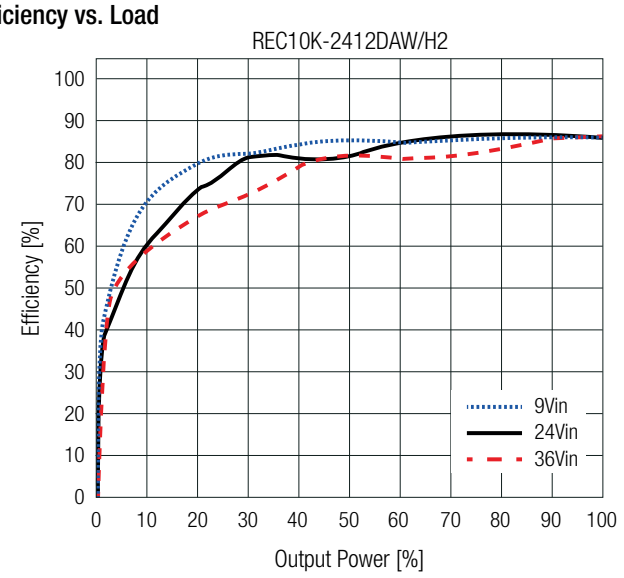

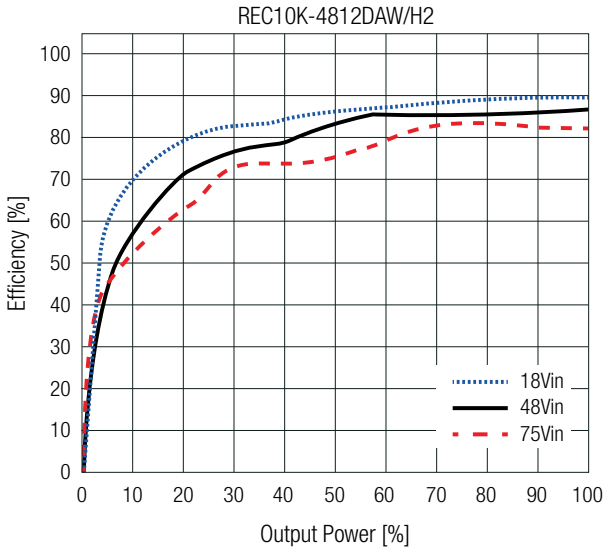

OUTPUT VOLTAGE TRIMMING

The REC10K-SAW series (single output only) offers the feature of trimming the output voltage over a range between ±10% by using external trim resistors. The values for trim resistors shown in trim tables below are according to standard E96 values; therefore, the specified voltage may slightly vary.

Trim up

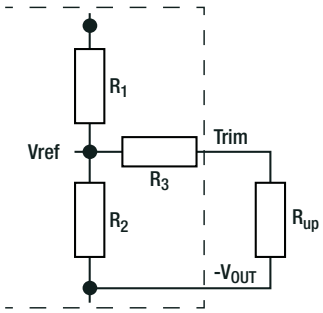

Trim down

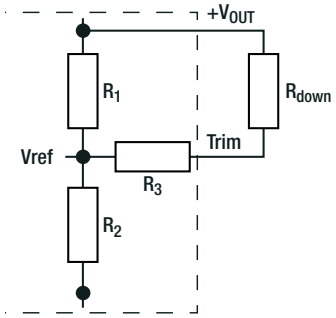

$Vout_{nom}$	= nominal output voltage	[VDC]
$Vout_{set}$	= trimmed output voltage	[VDC]
V_{ref}	= reference voltage	[VDC]
R_{up}	= trim up resistor	[Ω]
R_{down}	= trim down resistor	[Ω]
R_1, R_2, R_3	= internal resistors	[Ω]
k_u	= trim up factor	[ ]
k_d	= trim down factor	[ ]

Model	$Vout_{nom}$ [VDC]	R_1 [Ω]	R_2 [Ω]	R_3 [Ω]	V_{REF} [VDC]
REC10K-xx3.3SAW/H2	3.3	5k48	3k3	10k	1.24
REC10K-xx05SAW/H2	5	7k5	7k5	20k	2.5
REC10K-xx09SAW/H2	9	6k45	2k49	10k	
REC10K-xx12SAW/H2	12	9k46			
REC10K-xx15SAW/H2	15	25k5	5k1		
REC10K-xx24SAW/H2	24	21k43	2k49		

Calculations:

$$k_u = \left[\frac{V_{ref}}{Vout_{set} - V_{ref}}\right] \times R_1 \qquad R_{up} = \left[\frac{k_u \times R_2}{R_2 - k_u}\right] - R_3$$

$$k_d = \left[\frac{Vout_{set} - V_{ref}}{V_{ref}}\right] \times R_2 \qquad R_{down} = \left[\frac{k_d \times R_1}{R_1 - k_d}\right] - R_3$$

Practical Example REC10K-2405SAW/H2 trim up 10%:

V_{OUTnom}= 5VDC, $Vout_{set}$= 5.5VDC

$$k_u = \left[\frac{2.5VDC}{5.5VDC - 2.5VDC}\right] \times 7.5k\Omega = 6.25$$

$$R_{up} = \left[\frac{6.25 \times 7.5k\Omega}{7.5k\Omega - 6.25}\right] - 20k\Omega = 17.5k\Omega$$

R_{up} according to E96 ≈ **17k4Ω**

Practical Example REC10K-2405SAW/H2 trim down -10%:

V_{OUTnom}= 5VDC, $Vout_{set}$= 4.5VDC

$$k_d = \left[\frac{4.5VDC - 2.5VDC}{2.5VDC}\right] \times 7.5k\Omega = 6$$

$$R_{down} = \left[\frac{6 \times 7.5k\Omega}{7.5k\Omega - 6}\right] - 20k\Omega = 10k\Omega$$

R_{down} according to E96 ≈ **10kΩ**

copyright © RECOM Power GmbH, all rights reserved

OUTPUT VOLTAGE TRIMMING

$VOUT_{nom}$= 3.3VDC

Trim up

$Vout_{set}$	3.63	3.60	3.56	3.53	3.50	3.47	3.43	3.40	3.37	3.33	[VDC]
R_{up} (E96)	10k5	12k4	16k2	19k6	23k7	29k4	42k2	57k6	86k6	210k	[Ω]

Trim down

$Vout_{set}$	2.97	3.00	3.04	3.07	3.10	3.14	3.17	3.20	3.23	3.27	[VDC]
R_{down} (E96)	18k7	22k1	28k	34k	41k2	54k9	71k5	100k	147k	374k	[Ω]

$VOUT_{nom}$= 5VDC

Trim up

$Vout_{set}$	5.50	5.45	5.40	5.35	5.30	5.25	5.20	5.15	5.10	5.05	[VDC]
R_{up} (E96)	17k4	21k5	26k7	33k2	42k2	54k9	73k2	105k	169k	357k	[Ω]

Trim down

$Vout_{set}$	4.50	4.55	4.60	4.65	4.70	4.75	4.80	4.85	4.90	4.95	[VDC]
R_{down} (E96)	10k	14k	19k6	26k1	34k8	47k5	66k5	97k6	162k	348k	[Ω]

$VOUT_{nom}$= 9VDC

Trim up

$Vout_{set}$	9.90	9.81	9.72	9.63	9.54	9.45	9.36	9.27	9.18	9.09	[VDC]
R_{up} (E96)	7k5	9k31	11k8	14k7	18k7	24k3	31k6	44k2	69k8	133k	[Ω]

Trim down

$Vout_{set}$	8.10	8.19	8.28	8.37	8.46	8.55	8.64	8.73	8.82	8.91	[VDC]
R_{down} (E96)	31k6	36k5	44k2	52k3	64k9	80k6	107k	154k	249k	619k	[Ω]

$VOUT_{nom}$= 12VDC

Trim up

$Vout_{set}$	13.20	13.08	12.96	12.84	12.72	12.60	12.48	12.36	12.24	12.12	[VDC]
R_{up} (E96)	9k76	11k8	14k7	18k2	22k6	23k2	39k2	54k9	88k7	182k	[Ω]

Trim down

$Vout_{set}$	10.80	10.92	11.04	11.16	11.28	11.40	11.52	11.64	11.76	11.88	[VDC]
R_{down} (E96)	56k2	63k4	75k	88k7	105k	130k	169k	232k	357k	750k	[Ω]

$VOUT_{nom}$= 15VDC

Trim up

$Vout_{set}$	16.50	16.35	16.20	16.05	15.90	15.75	15.60	15.45	15.30	15.15	[VDC]
R_{up} (E96)	32k4	37k4	43k2	49k9	60k4	75k	95k3	130k	200k	412k	[Ω]

Trim down

$Vout_{set}$	13.50	13.65	13.80	13.95	14.10	14.25	14.40	14.55	14.70	14.85	[VDC]
R_{down} (E96)	178k	200k	232k	267k	316k	392k	499k	681k	1M02	2M1	[Ω]

$VOUT_{nom}$= 24VDC

Trim up

$Vout_{set}$	26.40	26.16	25.92	25.68	25.44	25.20	24.96	24.72	24.48	24.24	[VDC]
R_{up} (E96)	12k4	15k	18k2	22k2	27k4	35k7	46k4	66k5	105k	232k	[Ω]

Trim down

$Vout_{set}$	21.60	21.84	22.08	22.32	22.56	22.80	23.04	23.28	23.52	23.76	[VDC]
R_{down} (E96)	158k	182k	205k	243k	287k	348k	442k	590k	909k	1M78	[Ω]

copyright © RECOM Power GmbH, all rights reserved

REC10K-AW Series ◊ Regulated DC-DC Converter

10W ◊ Isolated Output ◊ 4:1 Input

RECOM DC/DC Converter

REGULATIONS

Parameter	Condition			Value
Output Accuracy				±1.0% typ.
Line Regulation	low line to high line, full load			±0.2% typ. / ±1.0% max.
Load Regulation (4)	10% to 100% load	single output	V_{OUT}= 3.3VDC	±0.6% typ. / ±1.0% max.
			V_{OUT}= 5VDC	±0.4% typ. / ±1.0% max.
			others	±0.15% typ. / ±1.0% max.
		dual output	+V_{OUT}= 5VDC	±0.1% typ. / ±1.0% max.
			-V_{OUT}= 5VDC	±1.0% typ. / ±1.5% max.
			+V_{OUT}, others	±0.1% typ. / ±1.0% max.
			-V_{OUT}, others	±0.2% typ. / ±1.0% max.
Cross Regulation	dual output only, 10% to 100% load		V_{OUT}= ±5, ±12, ±15VDC	±6.0% max.
			V_{OUT}= ±24VDC	±5.0% max.
Transient Response	25% load step change (75% - 100%)			500mV max.
	recovery time			300µs typ.

Note4: Operation below 10% load will not harm the converter, but specifications may not be met

PROTECTIONS (6)

Parameter	Condition		Value
Short Circuit Protection (SCP)			hiccup mode, auto recovery after faul condition removed
Over Voltage Protection (OVP)	110%-180% of nom. V_{OUT}		zener diode clamping
Over Current Protection (OCP)	automatic recovery		150% of rated I_{OUT}
Isolation Voltage (5)	I/P to O/P, according to 62368-1	1 minute	1.6kVDC
Isolation Resistance	I/P to O/P, V_{ISO}= 500VDC		1GΩ min.
Isolation Capacitance	I/P to O/P, 100kHz/0.1V		1000pF typ.
Insulation Grade	according to 62368-1		functional

Note5: For repeat Hi-Pot testing, reduce the time and/or the test voltage

Note6: Refer to local safety regulations if input over-current protections is also required. Recommended fuse: slow blow type

ENVIRONMENTAL

Parameter	Condition			Value
Operating Temperature Range	with derating	refer to **„Derating Graph“**		-40°C to +100°C
Maximum Case Temperature				+125°C
Operating Altitude	according to 62368-1			5000m
Operating Humidity	non-condensing			95% RH max.
Pollution Degree				PD2
Shock				according to MIL-STD-810F
Vibration				according to MIL-STD-810F
MTBF	according to MIL-HDBK-217F, G.B.	all models	T_{AMB}= +25°C	800 x 10^3 hours
			T_{AMB}= +65°C	200 x 10^3 hours

copyright © RECOM Power GmbH, all rights reserved

ENVIRONMENTAL

Derating Graph

(@ Chamber and natural convection 0.1m/s)

REC10K-243.3SAW/H2 & REC10K-2424SAW/H2

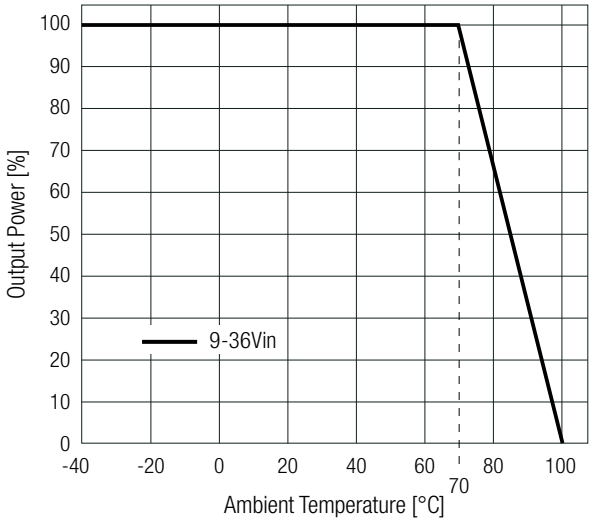

REC10K-2405SAW/H2

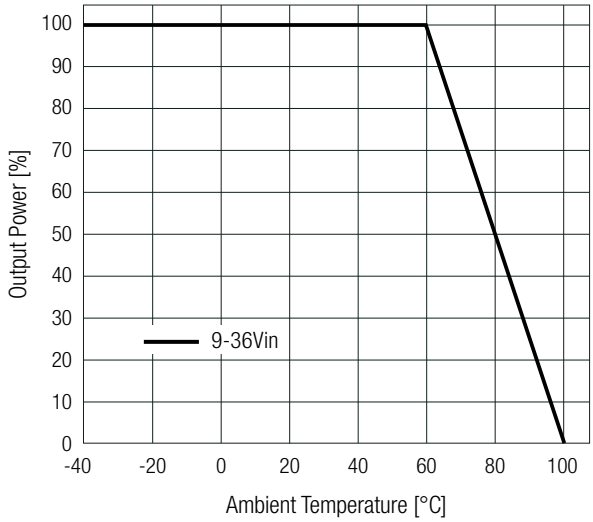

REC10K-2409SAW/H2, REC10K-2412SAW/H2
REC10K-2415SAW/H2

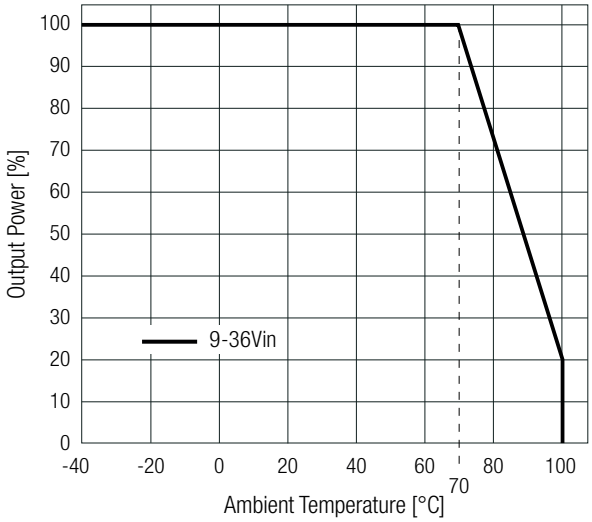

REC10K-2405DAW/H2

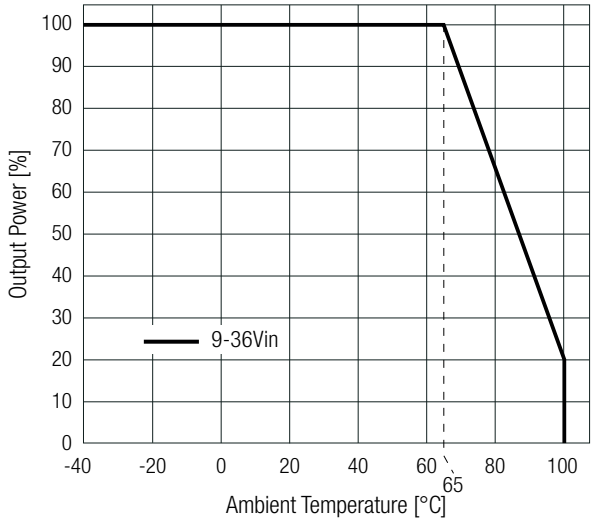

REC10K-2412DAW/H2 & REC10K-2415DAW/H2

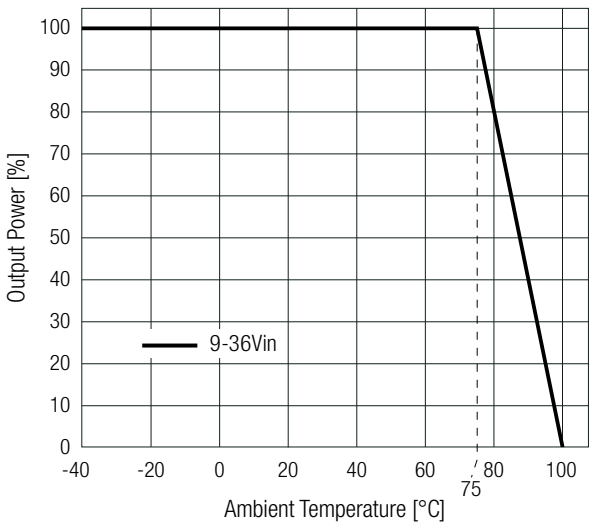

REC10K-2424DAW/H2

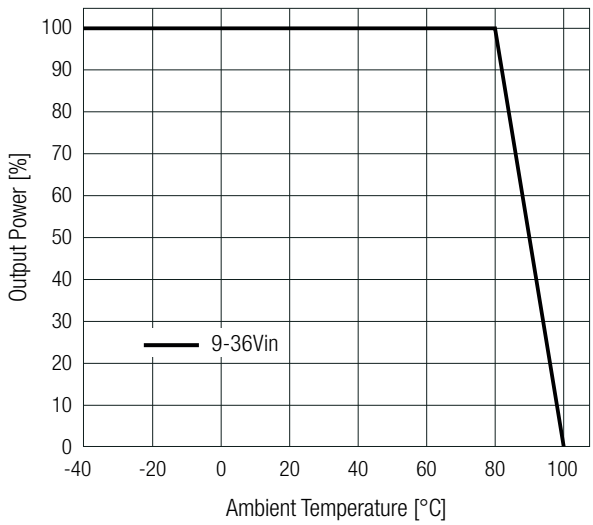

copyright © RECOM Power GmbH, all rights reserved

ENVIRONMENTAL

Derating Graph

(@ Chamber and natural convection 0.1m/s)

REC10K-4805SAW/H2 & REC10K-4805DAW/H2

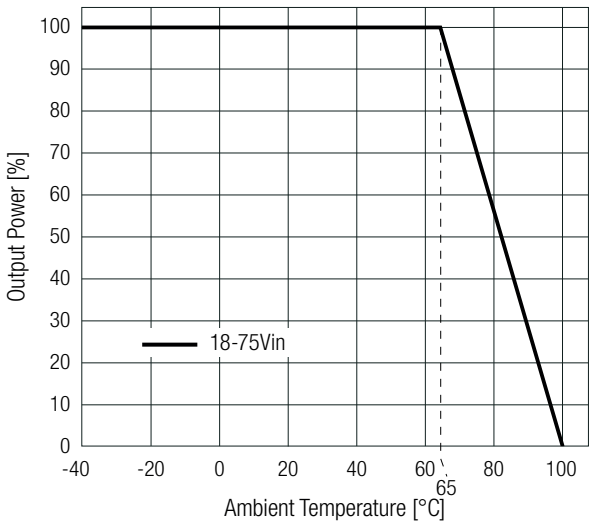

all others

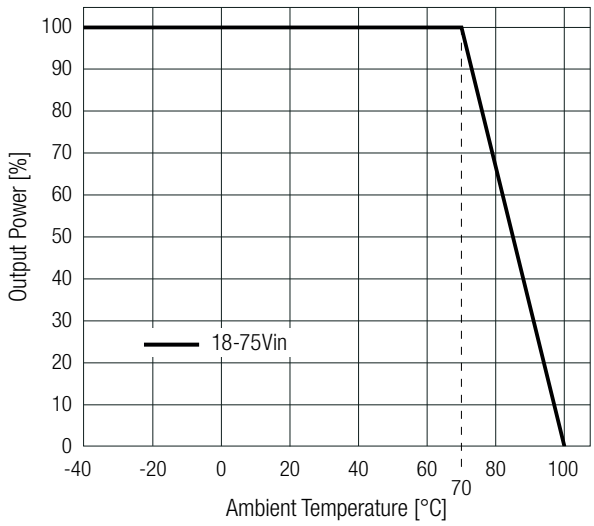

SAFETY AND CERTIFICATIONS

Certificate Type (Safety)	Report Number	Standard
Audio/Video, information and communication technology equipment - Part1: Safety requirements 3rd Edition	E491408-A6035-UL	UL62368-1:2019 3rd Edition
		CAN/CSA-C22.2 No. 62368-1-19 3rd Edition
Audio/Video, information and communication technology equipment - Part1: Safety requirements 3rd Edition (CB Scheme)	240513006	IEC62368-1:2018 3rd Edition
Audio/Video, information and communication technology equipment - Part1: Safety requirements 3rd Edition		EN IEC 62368-1:2020+A11:2020
RoHS2		RoHS 2011/65/EU + AM2015/863

EMC Compliance	Condition	Standard/Criterion
Electromagnetic Compatibility of Multimedia Equipment - Emission Requirements	with external filter, refer to below filter suggestions (7)	EN55032, Class B

EMC filter suggsestion according to EN55032, Single Output

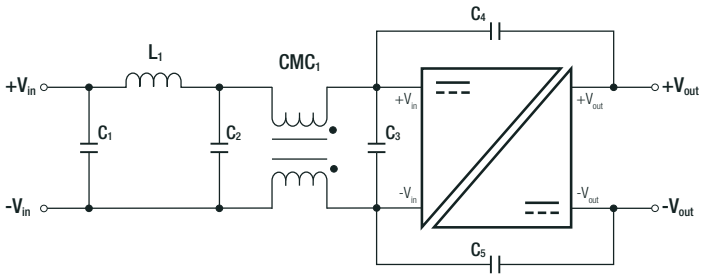

Component List Class B

Models	C1, C2, C3	L1	CMC1	C4, C5
REC10K-2409SAW/H2, REC10K-4812SAW/H2, REC10K-2412SAW/H2	10µF	33µH	5µH	4.7nF

EMC filter suggsestion according to EN55032, Dual Output

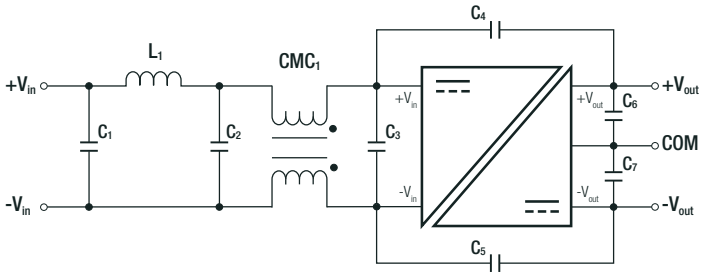

Component List Class B

Models	C1, C2, C3, C6, C7	L1	CMC1	C4, C5
REC10K-2412DAW/H2, REC10K-2405DAW/H2, REC10K-4824DAW/H2	10µF	10µH	5µH	4.7nF

Note7: Filter suggestions are valid for indicated part numbers only. For other part numbers, please contact RECOM for advice.

copyright © RECOM Power GmbH, all rights reserved

REC10K-AW Series ◊ Regulated DC-DC Converter

10W ◊ Isolated Output ◊ 4:1 Input

RECOM DC/DC Converter

DIMENSION & PHYSICAL CHARACTERISTICS

Parameter	Type	Value
Material	case	plastic, (UL94 V-0)
	potting	silicone, (UL94 V-0)
	PCB	FR4, (UL94 V-0)
Dimension (LxWxH)		25.4 x 25.4 x 10.2mm 1.0 x 1.0 x 0.40inch
Weight		15g typ. 0.033 lbs

Dimension Drawing (mm)

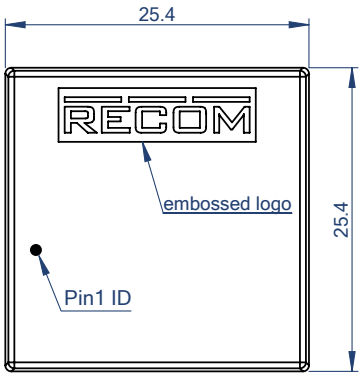

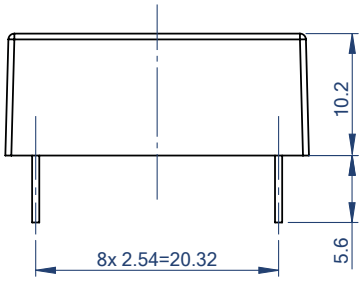

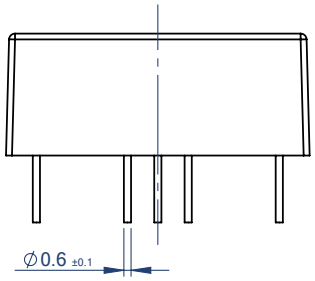

Pinning Information

Pin #	Single	Dual
1	+Vin	+Vin
2	-Vin	-Vin
3	CTRL	CTRL
4	-Vout	-Vout
5	TRIM	COM
6	+Vout	+Vout

Recommended Footprint Details

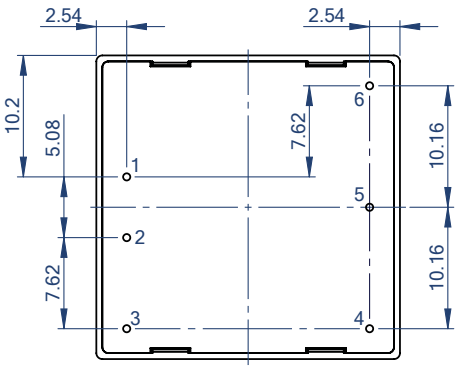

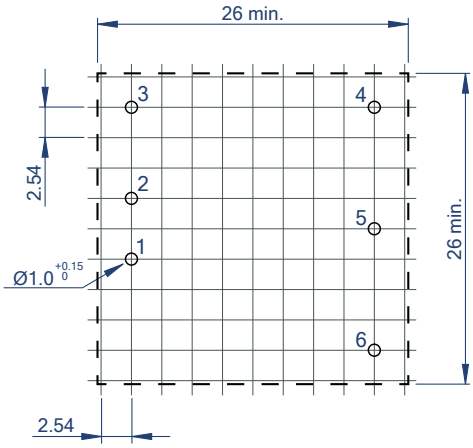

Tolerances:
x.x= ±0.5mm
x.xx= ±0.25mm

PACKAGING INFORMATION

Parameter	Type	Value
Packaging Dimension (LxWxH)	tube	520.0 x 27.5 x 19.3mm
Packaging Quantity		18pcs
Storage Temperature Range		-55°C to +125°C
Storage Humidity	non-condensing	95% RH max.

The product information and specifications may be subject to changes even without prior written notice.The product has been designed for various applications; its suitability lies in the responsibility of each customer. The products are not authorized for use in safety-critical applications without RECOM's explicit written consent. A safety-critical application is an application where a failure may reasonably be expected to endanger or cause loss of life, inflict bodily harm or damage property. The applicant shall indemnify and hold harmless RECOM, its affiliated companies and its representatives against any damage claims in connection with the unauthorized use of RECOM products in such safety-critical applications.

copyright © RECOM Power GmbH, all rights reserved
www.recom-power.com