Technical Data Sheet

REC20K Series ◊ Regulated DC-DC Converter

20W ◊ Isolated Output ◊ 4:1 Input

RECOM DC/DC Converter

FEATURES

- Industry standard 20W 1”x1” package
- Derates to 105°C ambient temperature
- Wide 4:1 input
- ON/OFF control pin, UVLO, SCP
- 3 year warranty



Dimensions (LxWxH): 25.4 x 25.4 x 10.2mm (1.0 x 1.0 x 0.40 inch)
18g (0.04 lbs)

APPLICATIONS



SAFETY & EMC

RoHS² compliant 10 from 10

Reach compliant

DESCRIPTION

The REC20K series are high power density, wide input voltage range 20W DC/DC converters in an industry standard 1”x1” case size. Despite their small size, the REC20K converters are fully specified devices with output currents up to 5 amps, high efficiency, no minimum load, 2000VDC/1min isolation, tight regulation, and low ripple/noise figures. The outputs are also fully protected against short circuits, overcurrent, and overvoltage, and the single output version offers a ±10% trim range. These converters fit well in industrial applications where board space is at a premium.

SELECTION GUIDE

Part Number	Input Voltage Range [VDC]	nom. Output Voltage [VDC]	Output Current [mA]	Efficiency (1) typ. [%]	max. Capacitive Load (2) [µF]
REC20K-243.3SZ	9-36	3.3	5000	86	20000
REC20K-2405SZ	9-36	5	4000	88	13000
REC20K-2409SZ	9-36	9	2222	88	3000
REC20K-2412SZ	9-36	12	1667	87	4000
REC20K-2415SZ	9-36	15	1333	88	5000
REC20K-2424SZ	9-36	24	833	88	4000
REC20K-2412DZ	9-36	±12	±833	88	±4000
REC20K-2415DZ	9-36	±15	±667	88	±3000
REC20K-483.3SZ	18-75	3.3	5000	87	15000
REC20K-4805SZ	18-75	5	4000	88	20000
REC20K-4809SZ	18-75	9	2222	89	4000
REC20K-4812SZ	18-75	12	1667	89	4000

copyright © RECOM Power GmbH, all rights reserved

REC20K Series ◊ Regulated DC-DC Converter

20W ◊ Isolated Output ◊ 4:1 Input

RECOM DC/DC Converter

SELECTION GUIDE

Part Number	Input Voltage Range [VDC]	Output Voltage [VDC]	Output Current [mA]	Efficiency (1) typ. [%]	max. Capacitive Load (2) [µF]
REC20K-4815SZ	18-75	15	1333	91	3000
REC20K-4824SZ	18-75	24	833	89	4000
REC20K-4812DZ	18-75	±12	±833	87	±3000
REC20K-4815DZ	18-75	±15	±667	87	±4000

Note1: Efficiency is tested at nominal input and full load at +25°C ambient
Note2: Max Cap Load is tested at nominal input and full resistive load

MODEL NUMBERING

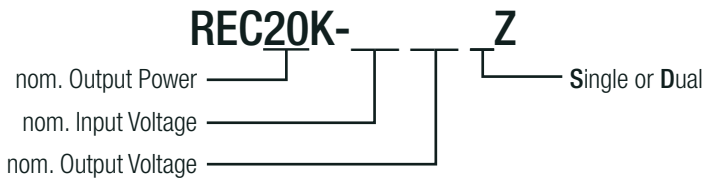

BASIC CHARACTERISTICS (measured @ T_{AMB}= 25°C, nom. V_{IN}, full load and after warm-up unless otherwise stated)

Parameter	Condition			Min.	Typ.	Max.
Internal Input Filter						capacitor
Input Voltage Range	nom. V_{IN}= 24VDC			9VDC		36VDC
	nom. V_{IN}= 48VDC			18VDC		75VDC
Input Under Voltage Lockout (UVLO)	nom. V_{IN}= 24VDC		DC-DC ON	8VDC		8.5VDC
			DC-DC OFF	6.5VDC		8VDC
	nom. V_{IN}= 48VDC		DC-DC ON	16VDC		17VDC
			DC-DC OFF	14.5VDC		16VDC
Input Current	nom. V_{IN}= 24VDC					950mA
	nom. V_{IN}= 48VDC					450mA
Quiescent Current					5mA	11mA
Output Power	nom. V_{OUT}= 3.3VDC					16.5W
	others					20W
Output Voltage Trimming	single output only, refer to **„Output Voltage Trimming“**			-10%		+10%
Minimum Load				0%		
Start-up time					20ms	50ms
ON/OFF CTRL	DC-DC ON					Open or V_{CTRL} >1.5VDC
	DC-DC OFF					Short to -V_{IN} or <1.5VDC
Input Current of CTRL Pin	DC-DC ON					100µA
Standby Current	DC-DC OFF				2mA	10mA
Internal Operating Frequency					265kHz	
Output Ripple and Noise (3)	20MHz BW	nom. V_{IN}= 24VDC	single output		200mVp-p	
			dual output		150mVp-p	
		nom. V_{IN}= 48VDC	single output		150mVp-p	
			dual output		100mVp-p	

Note3: Measurements are made with a 0.1µF MLCC & 10µF E-cap in parallel across output. (low ESR)
The test setup can have an impact on ripple noise values (placement of scope probe, capacitors, it's specifications, wires, PCB tracks, distances, etc.)

copyright © RECOM Power GmbH, all rights reserved
www.recom-power.com

BASIC CHARACTERISTICS (measured @ T_{AMB}= 25°C, nom. V_{IN}, full load and after warm-up unless otherwise stated)

Efficiency vs. Load

REC20K-2405SZ

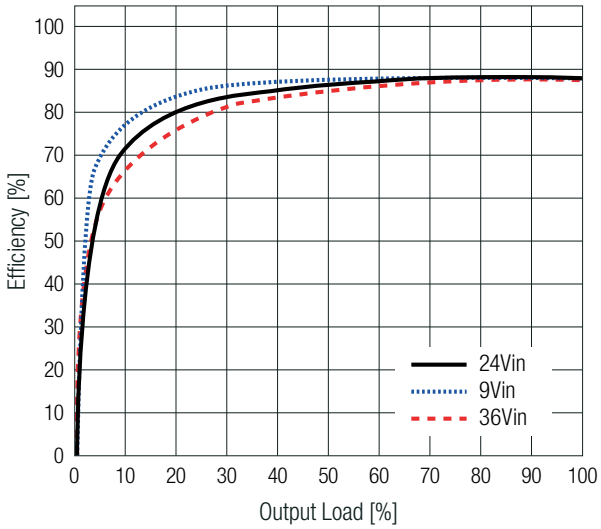

REC20K-4805SZ

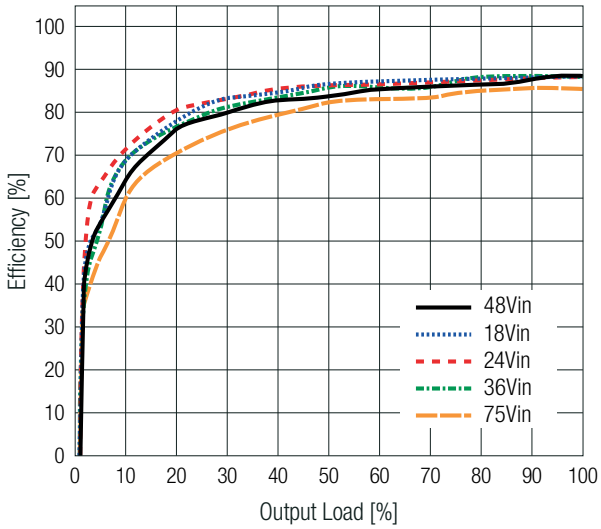

REC20K-2412SZ

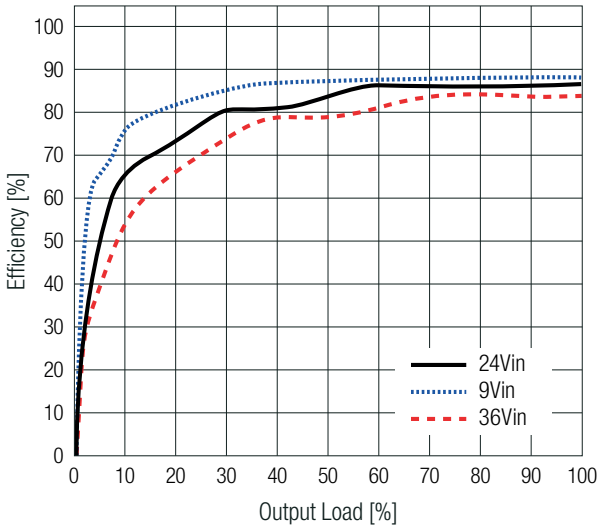

REC20K-4812SZ

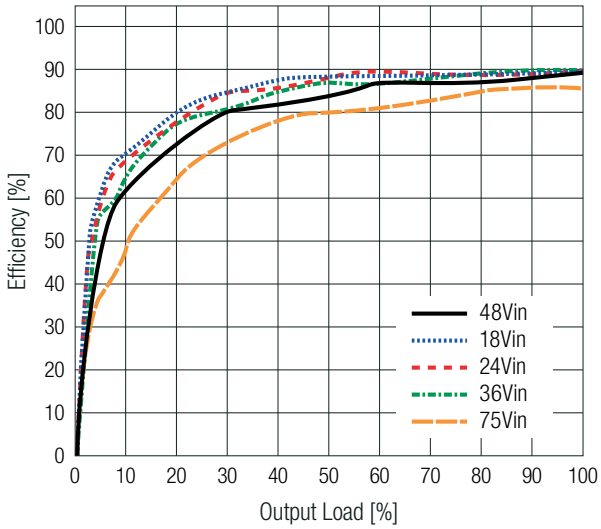

REC20K-2424SZ

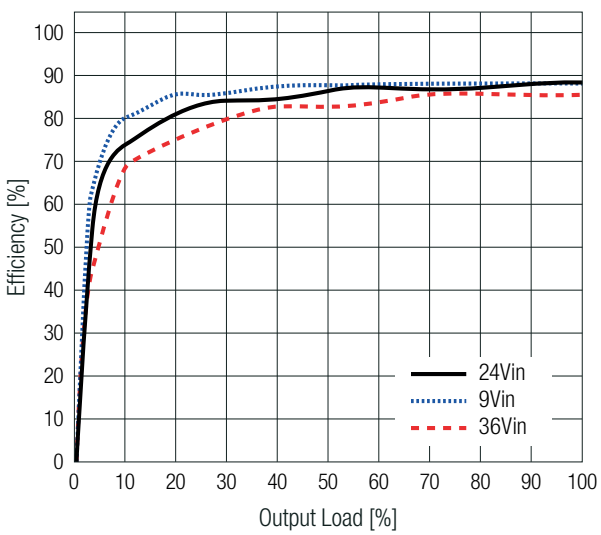

REC20K-4824SZ

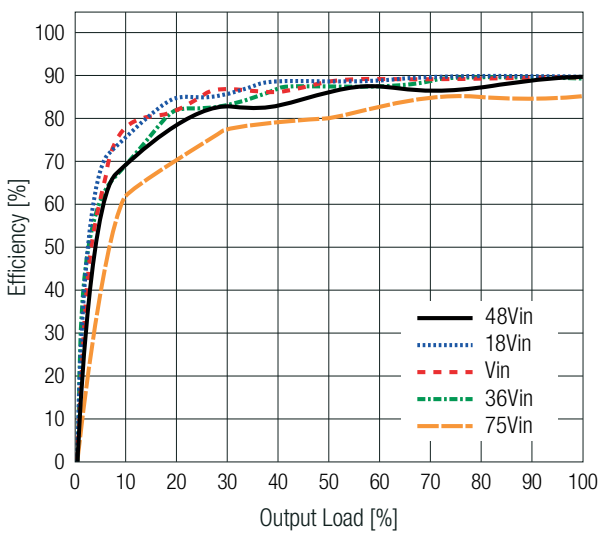

copyright © RECOM Power GmbH, all rights reserved

OUTPUT VOLTAGE TRIMMING

The REC20K-SZ series (single output only) offers the feature of trimming the output voltage over a range between ±10% by using external trim resistors. The values for trim resistors shown in trim tables below are according to standard E96 values; therefore, the specified voltage may slightly vary.

Trim up

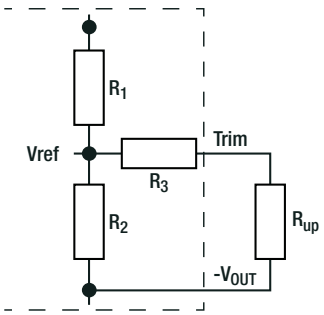

Trim down

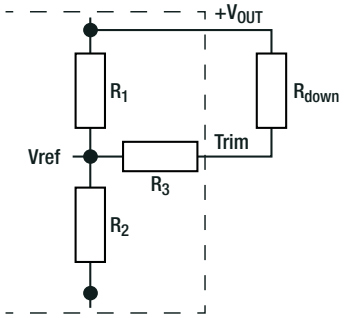

$Vout_{nom}$	= nominal output voltage	[VDC]
$Vout_{set}$	= trimmed output voltage	[VDC]
V_{ref}	= reference voltage	[VDC]
R_{up}	= trim up resistor	[Ω]
R_{down}	= trim down resistor	[Ω]
R_1, R_2, R_3	= internal resistors	[Ω]
k_u	= trim up factor	[ ]
k_d	= trim down factor	[ ]

Model	$Vout_{nom}$ [VDC]	R_1 [Ω]	R_2 [Ω]	R_3 [Ω]	V_{REF} [VDC]
REC20K-243.3SZ	3.3	8k45	5k1	20k	1.24
REC20K-483.3SZ				10k	
REC20K-2405SZ	5	7k5	7k5	20k	2.5
REC20K-4805SZ				10k	
REC20K-2409SZ	9	6k45	2k49	10k2	
REC20K-4809SZ				10k	
REC20K-2412SZ	12	9k53	2k49	10k2	
REC20K-4812SZ				10k	
REC20K-2415SZ	15	25k5	5k1	10k2	
REC20K-4815SZ				10k	
REC20K-2424SZ	24	21k43	2k49	10k2	
REC20K-4824SZ				10k	

Calculation:

$$k_u = \left[\frac{V_{ref}}{Vout_{set} - V_{ref}}\right] \times R_1 \qquad R_{up} = \left[\frac{k_u \times R_2}{R_2 - k_u}\right] - R_3$$

$$k_d = \left[\frac{Vout_{set} - V_{ref}}{V_{ref}}\right] \times R_2 \qquad R_{down} = \left[\frac{k_d \times R_1}{R_1 - k_d}\right] - R_3$$

Practical Example REC20K-2405SZ trim up 10%:

V_{OUTnom}= 5VDC, $Vout_{set}$= 5.5VDC

$$k_u = \left[\frac{V_{ref}}{Vout_{set} - V_{ref}}\right] \times R_1$$

$$R_{up} = \left[\frac{6.25 \times 7.5k\Omega}{7.5k\Omega - 6.25}\right] - 20k\Omega = 17.5k\Omega$$

R_{up} according to E96 ≈ **17k4Ω**

Practical Example REC20K-2405SZ trim down -10%:

V_{OUTnom}= 5VDC, $Vout_{set}$= 4.5VDC

$$k_d = \left[\frac{Vout_{set} - V_{ref}}{V_{ref}}\right] \times R_2$$

$$R_{down} = \left[\frac{6 \times 7.5k\Omega}{7.5k\Omega - 6}\right] - 20k\Omega = 10k\Omega$$

R_{down} according to E96 ≈ **10kΩ**

$VOUT_{nom}$= 3.3VDC

Trim up

$Vout_{set}$	3.63	3.60	3.56	3.53	3.50	3.47	3.43	3.40	3.37	3.33	[VDC]
R_{up} (E96)	10k5	12k4	16k2	19k6	23k7	29k4	42k2	57k6	86k6	210k	[Ω]

Trim down

$Vout_{set}$	2.97	3.00	3.04	3.07	3.10	3.14	3.17	3.20	3.23	3.27	[VDC]
R_{down} (E96)	18k7	22k1	28k	34k	41k2	54k9	71k5	100k	147k	374k	[Ω]

copyright © RECOM Power GmbH, all rights reserved

OUTPUT VOLTAGE TRIMMING

$VOUT_{nom}$= 5VDC

Trim up

$Vout_{set}$	5.50	5.45	5.40	5.35	5.30	5.25	5.20	5.15	5.10	5.05	[VDC]
R_{up} (E96)	17k4	21k5	26k7	33k2	42k2	54k9	73k2	105k	169k	357k	[Ω]

Trim down

$Vout_{set}$	4.50	4.55	4.60	4.65	4.70	4.75	4.80	4.85	4.90	4.95	[VDC]
R_{down} (E96)	10k	14k	19k6	26k1	34k8	47k5	66k5	97k6	162k	348k	[Ω]

$VOUT_{nom}$= 9VDC

Trim up

$Vout_{set}$	9.90	9.81	9.72	9.63	9.54	9.45	9.36	9.27	9.18	9.09	[VDC]
R_{up} (E96)	7k5	9k31	11k8	14k7	18k7	24k3	31k6	44k2	69k8	133k	[Ω]

Trim down

$Vout_{set}$	8.10	8.19	8.28	8.37	8.46	8.55	8.64	8.73	8.82	8.91	[VDC]
R_{down} (E96)	31k6	36k5	44k2	52k3	64k9	80k6	107k	154k	249k	619k	[Ω]

$VOUT_{nom}$= 12VDC

Trim up

$Vout_{set}$	13.20	13.08	12.96	12.84	12.72	12.60	12.48	12.36	12.24	12.12	[VDC]
R_{up} (E96)	9k76	11k8	14k7	18k2	22k6	23k2	39k2	54k9	88k7	182k	[Ω]

Trim down

$Vout_{set}$	10.80	10.92	11.04	11.16	11.28	11.40	11.52	11.64	11.76	11.88	[VDC]
R_{down} (E96)	56k2	63k4	75k	88k7	105k	130k	169k	232k	357k	750k	[Ω]

$VOUT_{nom}$= 15VDC

Trim up

$Vout_{set}$	16.50	16.35	16.20	16.05	15.90	15.75	15.60	15.45	15.30	15.15	[VDC]
R_{up} (E96)	32k4	37k4	43k2	49k9	60k4	75k	95k3	130k	200k	412k	[Ω]

Trim down

$Vout_{set}$	13.50	13.65	13.80	13.95	14.10	14.25	14.40	14.55	14.70	14.85	[VDC]
R_{down} (E96)	178k	200k	232k	267k	316k	392k	499k	681k	1M02	2M1	[Ω]

$VOUT_{nom}$= 24VDC

Trim up

$Vout_{set}$	26.40	26.16	25.92	25.68	25.44	25.20	24.96	24.72	24.48	24.24	[VDC]
R_{up} (E96)	12k4	15k	18k2	22k2	27k4	35k7	46k4	66k5	105k	232k	[Ω]

Trim down

$Vout_{set}$	21.60	21.84	22.08	22.32	22.56	22.80	23.04	23.28	23.52	23.76	[VDC]
R_{down} (E96)	158k	182k	205k	243k	287k	348k	442k	590k	909k	1M78	[Ω]

copyright © RECOM Power GmbH, all rights reserved

REGULATIONS

Parameter	Condition			Value
Output Accuracy				±1.0% typ.
Line Regulation	low line to high line, full load			±0.1% typ. / ±1.0% max.
Load Regulation (4)	10% to 100% load	single output	V_{OUT}= 3.3VDC	±0.3% typ. / ±1.0% max.
			V_{OUT}= 5VDC	±0.15% typ. / ±1.0% max.
			others	±0.1% typ. / ±1.0% max.
		dual output	+V_{OUT}= 5VDC	±0.1% typ. / ±1.0% max.
			-V_{OUT}= 5VDC	±0.5% typ. / ±1.5% max.
			+V_{OUT}, others	±0.1% typ. / ±1.0% max.
			-V_{OUT}, others	±0.3% typ. / ±1.0% max.
Cross Regulation	dual output only, asymetrical load 25%/100%			±3.0% typ.
Transient Response	25% load step change (75% - 100%)			400mV max.
	recovery time			450µs typ.

Note4: Operation below 10% load will not harm the converter, but specifications may not be met

PROTECTIONS (6)

Parameter	Condition		Value
Short Circuit Protection (SCP)			hiccup mode, auto recovery after faul condition removed
Over Voltage Protection (OVP)	110%-180% of nom. V_{OUT}		zener diode clamping
Over Current Protection (OCP)	nom. V_{IN}= 24VDC		230% max. of rated I_{OUT}
	nom. V_{IN}= 48VDC		225% may. of rated I_{OUT}
Isolation Voltage (5)	I/P to O/P, according to 62368-1	1 minute	2kVDC
Isolation Resistance	I/P to O/P, V_{ISO}= 500VDC		1GΩ min.
Isolation Capacitance	I/P to O/P, 100kHz/0.1V		2000pF typ.
Insulation Grade	according to 62368-1		basic

Note5: For repeat Hi-Pot testing, reduce the time and/or the test voltage
Note6: Refer to local safety regulations if input over-current protections is also required. Recommended fuse: slow blow type

ENVIRONMENTAL

Parameter	Condition		Value
Operating Temperature Range	with derating	refer to **„Derating Graph“**	-40°C to +105°C
Maximum Case Temperature			+125°C
Operating Altitude	according to 62368-1		5000m
Operating Humidity	non-condensing		5-95% RH max.
Pollution Degree			PD2
Shock			according to MIL-STD-810F
Vibration			according to MIL-STD-810F
MTBF	according to MIL-HDBK-217F, G.B. T_{AMB}= +25°C	nom. V_{IN}= 24VDC	1100 x 10^3 hours
		nom. V_{IN}= 48VDC	1500 x 10^3 hours

copyright © RECOM Power GmbH, all rights reserved

ENVIRONMENTAL

Derating Graph

(@ Chamber and natural convection 0.1m/s)

REC20K-243.3SZ, REC20K-2405SZ, REC20K-2424SZ

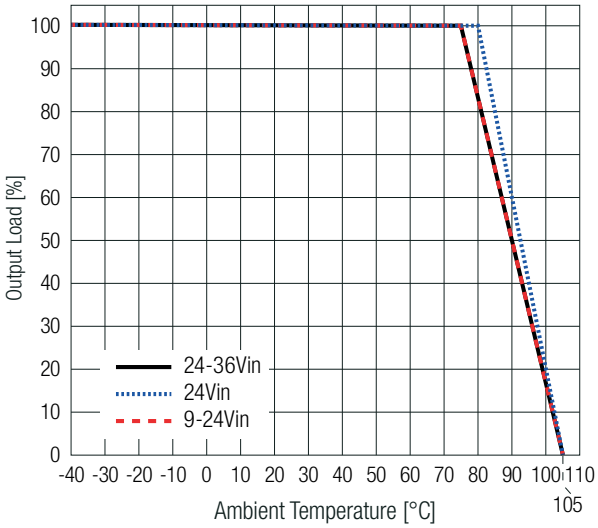

REC20K-2415SZ, REC20K-2415DZ, REC20K-2412DZ

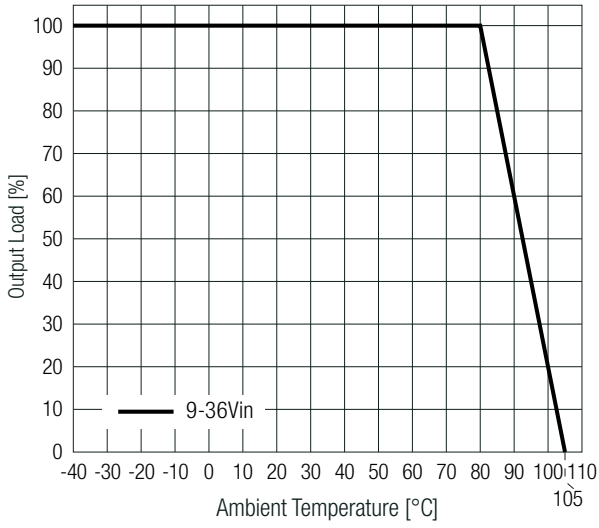

REC20K-2412SZ

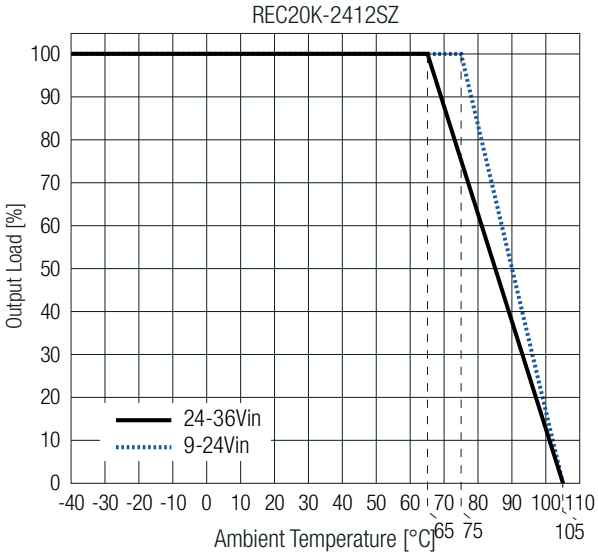

REC20K-4809SZ

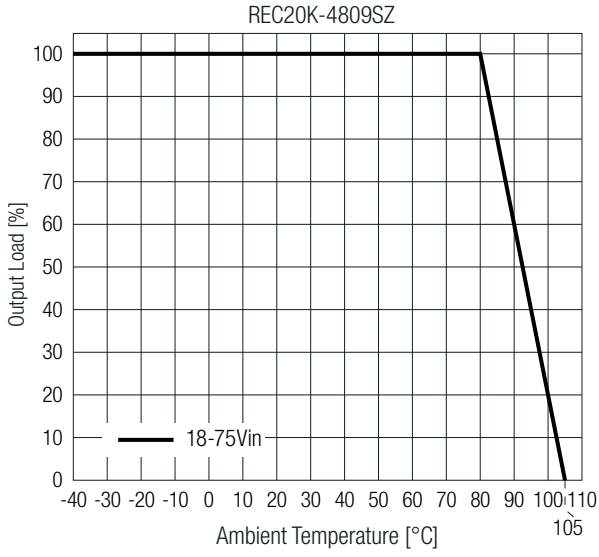

REC20K-4812SZ

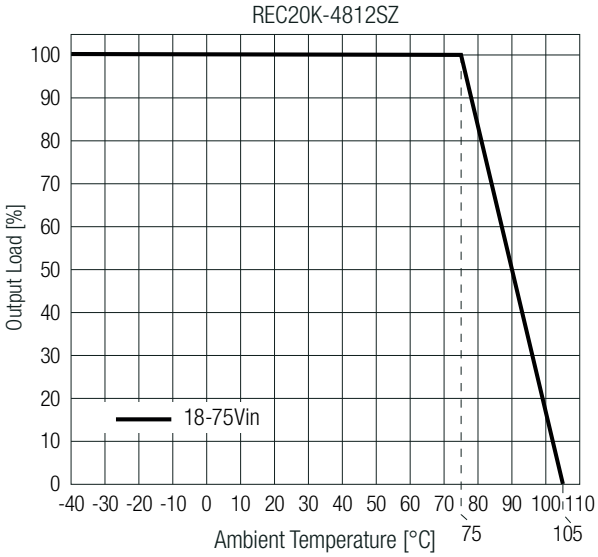

REC20K-4815SZ, REC20K-4824SZ

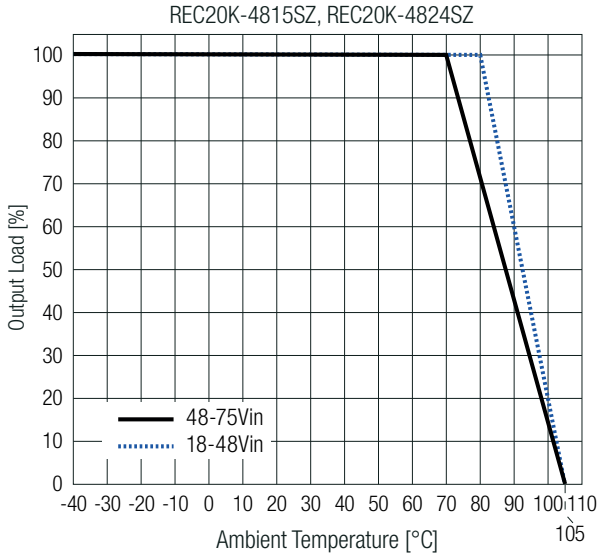

copyright © RECOM Power GmbH, all rights reserved

ENVIRONMENTAL

Derating Graph

(@ Chamber and natural convection 0.1m/s)

REC20K-2409SZ

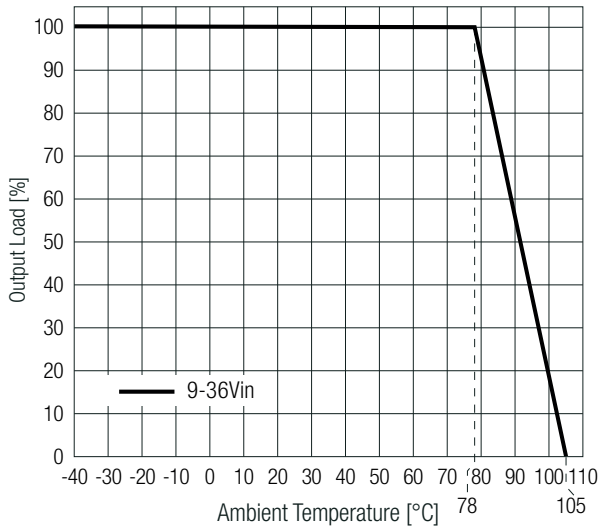

REC20K-4812DZ, REC20K-4815DZ, REC20K-483.3SZ

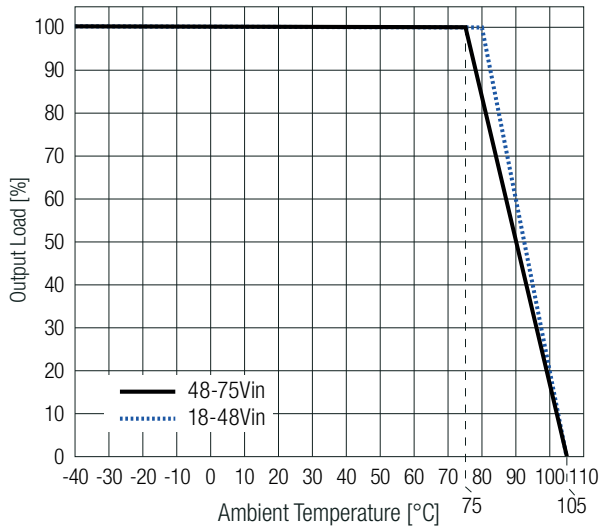

SAFETY AND CERTIFICATIONS

Certificate Type (Safety)	Report Number	Standard
Audio/Video, information and communication technology equipment - Part1: Safety requirements 3rd Edition	E491408-A6031-UL	UL62368-1:2019 3rd Edition
		CAN/CSA-C22.2 No. 62368-1-19 3rd Edition
Audio/Video, information and communication technology equipment - Part1: Safety requirements 3rd Edition (CB Scheme)	230427003	IEC62368-1:2018 3rd Edition
Audio/Video, information and communication technology equipment - Part1: Safety requirements 3rd Edition		EN IEC 62368-1:2020+A11:2020
RoHS2		RoHS 2011/65/EU + AM2015/863

EMC Compliance	Condition	Standard/Criterion
Electromagnetic Compatibility of Multimedia Equipment - Emission Requirements	with external filter, refer to below filter suggestions (7)	EN55032, Class A EN55032, Class B

EMC filter suggsestion according to EN55032, Class A

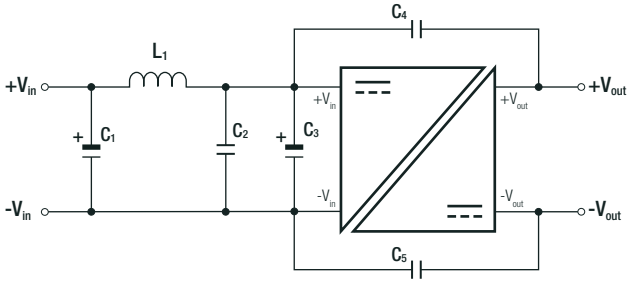

Component List Class A

C1	L1	C2	C3	C4, C5
150µF	22µH	10µF	47µF	4.7nF

EMC filter suggsestion according to EN55032, Class B

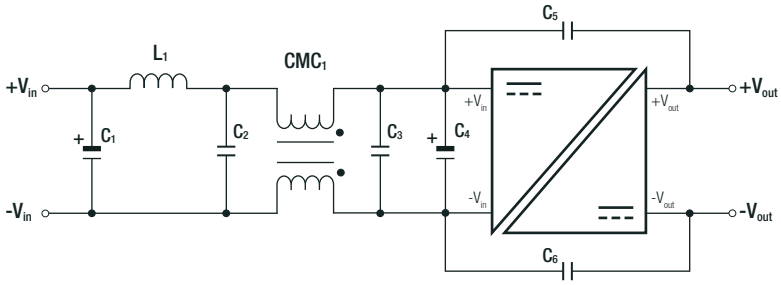

Component List Class B

C1	L1	C2	CMC1	C3	C4	C5, C6
150µF	22µH	10µF	120µH	10µF	4µF	4.7nF

Note7: Filter suggestions are valid for REC20K-2405SZ only. For other part numbers, please contact RECOM for advice.

copyright © RECOM Power GmbH, all rights reserved

REC20K Series ◊ Regulated DC-DC Converter

20W ◊ Isolated Output ◊ 4:1 Input

RECOM DC/DC Converter

DIMENSION & PHYSICAL CHARACTERISTICS

Parameter	Type	Value
Material	case	plastic, (UL94 V-0)
	potting	silicone, (UL94 V-0)
	PCB	FR4, (UL94 V-0)
Dimension (LxWxH)		25.4 x 25.4 x 10.2mm 1.0 x 1.0 x 0.40inch
Weight		18g typ. 0.04 lbs

Dimension Drawing (mm)

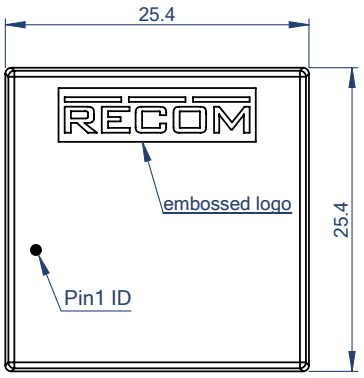

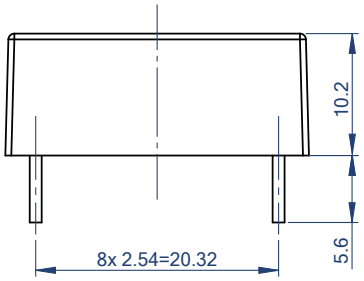

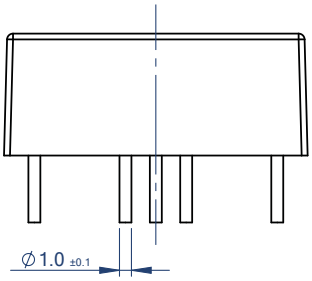

Pinning Information

Pin #	Single	Dual
1	+Vin	+Vin
2	-Vin	-Vin
3	CTRL	CTRL
4	-Vout	-Vout
5	TRIM	COM
6	+Vout	+Vout

Recommended Footprint Details

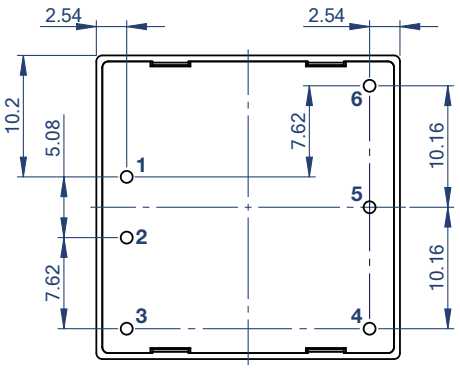

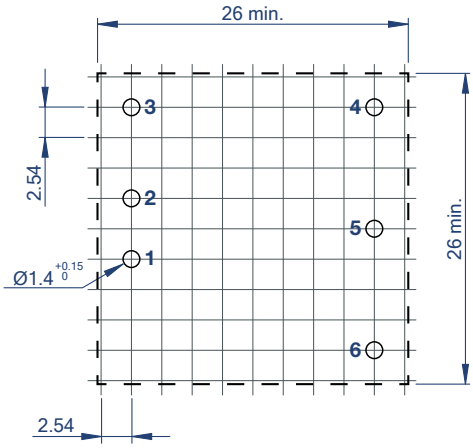

Tolerances:
x.x= ±0.5mm
x.xx= ±0.25mm

PACKAGING INFORMATION

Parameter	Type	Value
Packaging Dimension (LxWxH)	tube	520.0 x 27.5 x 19.3mm
Packaging Quantity		18pcs
Storage Temperature Range		-55°C to +125°C
Storage Humidity	non-condensing	95% RH max.

The product information and specifications may be subject to changes even without prior written notice.The product has been designed for various applications; its suitability lies in the responsibility of each customer. The products are not authorized for use in safety-critical applications without RECOM's explicit written consent. A safety-critical application is an application where a failure may reasonably be expected to endanger or cause loss of life, inflict bodily harm or damage property. The applicant shall indemnify and hold harmless RECOM, its affiliated companies and its representatives against any damage claims in connection with the unauthorized use of RECOM products in such safety-critical applications.

copyright © RECOM Power GmbH, all rights reserved
www.recom-power.com