Technical Data Sheet

RP40Q-RUW Series ◊ Quarter Brick

40W ◊ Ultra-Wide Input: 14V-160VDC

RECOM DC/DC Converter

FEATURES

- 12:1 ultra wide input voltage range
- 3kVAC/1 minute reinforced insulation
- High efficiency over entire input voltage range
- -40°C to +85°C temperature range without derating
- Output voltage sense and trim
- CE marked
- 3 year warranty





Dimensions (LxWxH): 57.9 x 36.8 x 12.7mm (2.28 x 1.45 x 0.5 inch)
64.0g (0.141 lbs)

APPLICATIONS

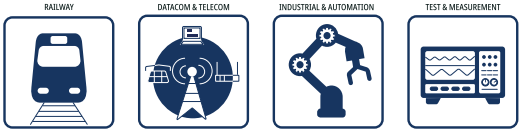

SAFETY & EMC

RoHS² compliant 10 from 10 | Reach compliant | CE | cULus E196683

DESCRIPTION

The quarter brick RP40Q series DC/DC converter is designed for railway rolling stock and high voltage battery applications. It has a 12:1 input voltage range to cover all input voltages from nominal 24VDC up to 110VDC in a single product (including EN50155 transients) and offers isolated and regulated 5V, 12V, 15V, 24V or 48VDC outputs with sense and trim pins. Programmable undervoltage-lockout and external bus pin for simplified compliance to challenging hold-up requirements is optional. The converter has a consistently high efficiency over the entire input voltage range and has an operating temperature range from -40°C to +85°C without forced air cooling or derating. The case is fitted with threaded inserts for secure mounting in high shock and vibration environments. The converter is CE marked and comes with a three year warranty.

SELECTION GUIDE

Part Number	Input Voltage Range [VDC]	nom. Output Voltage [VDC]	Output Current max. [A]	Efficiency typ. (1) [%]	Max. Capacitive Load (2) [µF]
RP40Q-11005SRUW/N (3,4,5)	14-160	5	8	89	16000
RP40Q-11012SRUW/N (3,4,5)	14-160	12	3.33	91	2800
RP40Q-11015SRUW/N (3,4,5)	14-160	15	2.67	91	1800
RP40Q-11024SRUW/N (3,4,5)	14-160	24	1.67	90	720
RP40Q-11048SRUW/N (3,4,5)	14-160	48	0.83	90	180

Note1: Efficiency is tested at 72Vin and full load at +25°C ambient
Note2: Max. Cap Load is tested at nominal input and full resistive load

copyright © RECOM Power GmbH, all rights reserved

RP40Q-RUW Series ◊ Quarter Brick

40W ◊ Ultra-Wide Input: 14V-160VDC

RECOM DC/DC Converter

MODEL NUMBERING

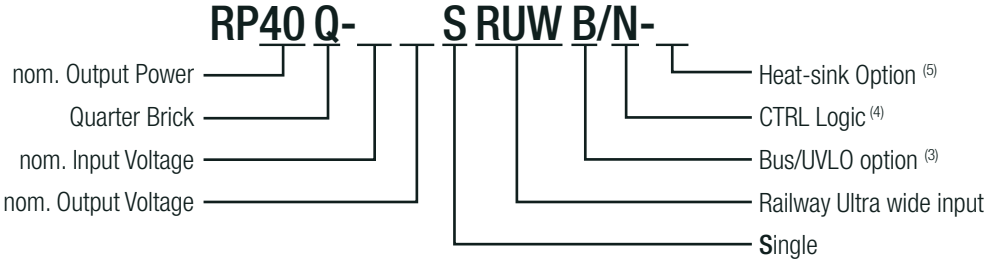

Note3: without "B" = without Bus function & UVP adjustability (pin 8 and 10 omitted)
with "B" = with Bus & UVP adjustability (pin 8 and 10 present)

Note4: standard part is with suffix "/N" for negative logic (0=ON, 1=OFF)
or add suffix "/P" for positive logic (1=ON, 0=OFF), for more details refer to **„ON/OFF CTRL"**

Note5: add suffix "-HC" for screwed Heat-sink (refer to **„Dimension Drawing pre-mounted Heat-sink (mm)"**)

ACCESSIBLE PART

Part Number	Description	Datasheet Link
R-REF04-RIA12-1	RIA12 reference board	R-REF04-RIA12.pdf
RSP150-168	Surge protector (voltage clamp) for RIA12 and NF F01-510 transients	RSP150-168.pdf

BASIC CHARACTERISTICS (measured @ T_{AMB}= 25°C, nom. V_{IN}, full load and after warm-up unless otherwise stated)

Parameter	Condition			Min.	Typ.	Max.
Internal Input Filter						Pi-Type
Input Voltage Range				14VDC	110VDC	160VDC
Input Surge Voltage	nom. Vin= 110VDC	below 1 second				185VDC
Under Voltage Lockout (UVLO)	nom. Vin= 110VDC	DC/DC ON				14VDC
		DC/DC OFF		10VDC	11VDC	12VDC
Input Current	V_{IN}= 16VDC				2.75A	3.5A
	V_{IN}= 110VDC				0.4A	
	V_{IN}= 160VDC				0.27A	
Quiescent current	nom. Vin= 110VDC				10mA	
Output Voltage Trimming	refer to **„Output Voltage Trimming"**			-20%		+10%
Minimum Load				0%		
Start-up Time	constant resistive load				75ms	100ms
Rise Time					40ms	
ON/OFF CTRL (6)	refer to **„ON/OFF CTRL"**	Positive Logic	DC/DC ON	Open or 3VDC < V_{CTRL} < 12VDC		
			DC/DC OFF	Short or 0VDC < V_{CTRL} < 1.2VDC		
		Negative Logic	DC/DC ON	Short or 0VDC < V_{CTRL} < 1.2VDC		
			DC/DC OFF	Open or 3VDC < V_{CTRL} < 12VDC		
Input Current on CTRL pin	drive current	I_{CTRL}		-0.5mA		1mA
Standby Current	DC/DC OFF	I_{in}			1mA	
Internal Operating Frequency				160kHz	180kHz	200kHz
Output Ripple and Noise (7)	measured at 20MHz BW	5Vout			75mVp-p	
		12, 15Vout			100mVp-p	
		24Vout			200mVp-p	
		48Vout			300mVp-p	
Remote Sense (8)						10%

Note6: The ON/OFF control function can be positive or negative logic. The pin voltage is referenced to -Vin

Note7: Measurements are made for 5Vout with a 1µF/25V X7R MLCC and a 22µF/25V E-Cap; for 15Vout with a 22µF/25V X7R MLCC, for 24Vout with a 4.7µF/50V X7R MLCC and for 48Vout with a 2.2µF/100V X7R MLCC

Note8: If not used connect Remote Sense pins to corresponding output pins

copyright © RECOM Power GmbH, all rights reserved

BASIC CHARACTERISTICS (measured @ T_{AMB}= 25°C, nom. V_{IN}, full load and after warm-up unless otherwise stated)

Input Voltage Range

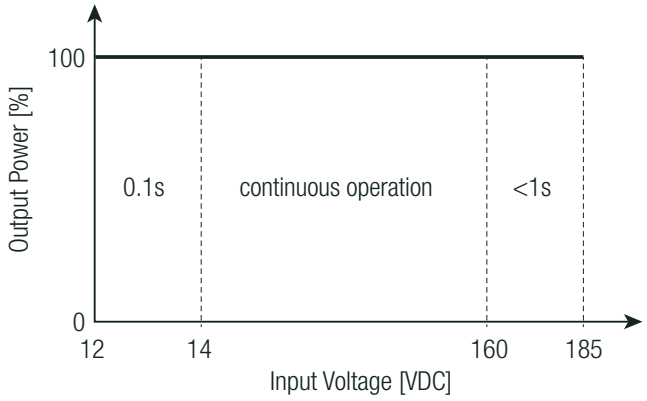

Continuous full power operation is rated between 14V and 160V, including full load start-up.
Once running, the converter will operate for short periods of time over an extended input voltage range down to 12V and up to 185V, thus covering all EN50155 under-voltage and over-voltage transient conditions.

RP40Q-11005SRUW

Efficiency vs. Output Load

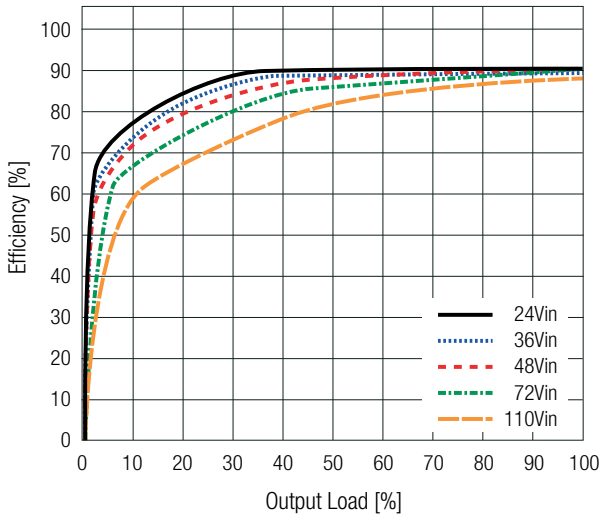

Efficiency vs. Input Voltage

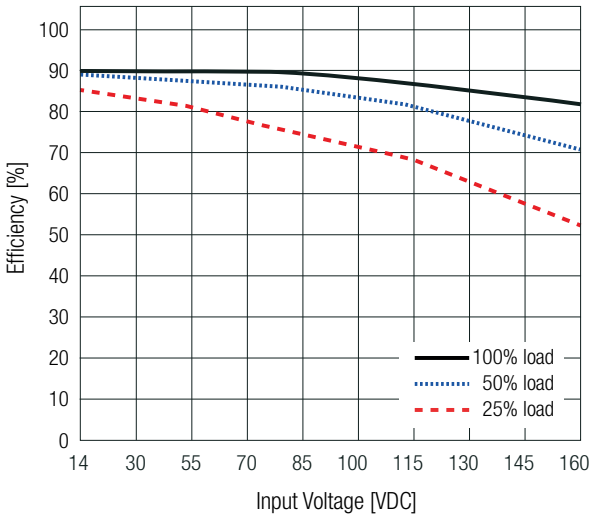

Power Dissipation vs. Output Current

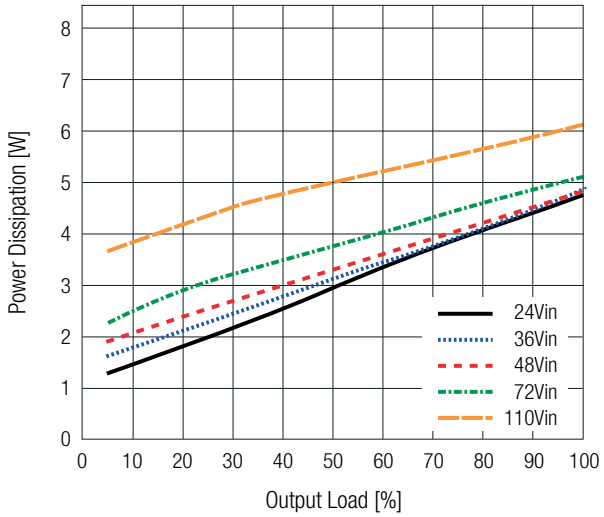

Typical Output Ripple and Noise (full load)

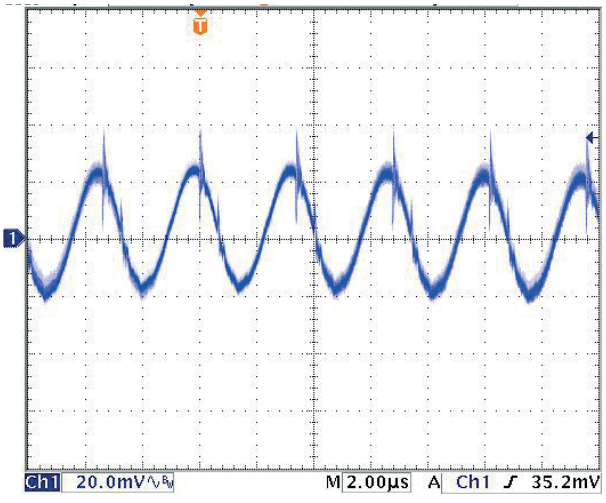

copyright © RECOM Power GmbH, all rights reserved

RP40Q-RUW Series ◊ Quarter Brick

40W ◊ Ultra-Wide Input: 14V-160VDC

RECOM DC/DC Converter

BASIC CHARACTERISTICS (measured @ T_{AMB}= 25°C, nom. V_{IN}, full load and after warm-up unless otherwise stated)

ON/OFF Control Start up Rise Characteristic

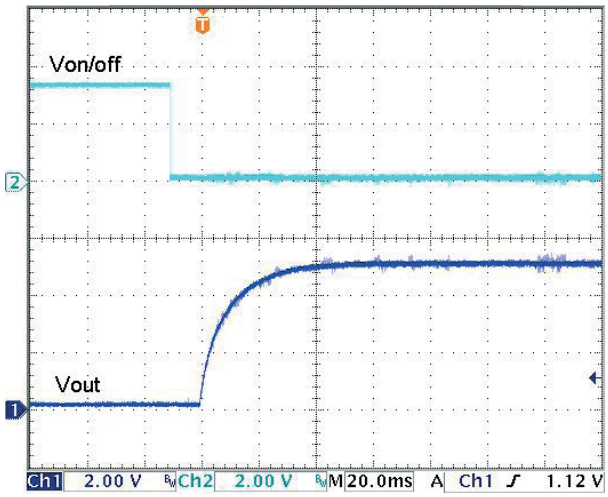

Power up Start-up Rise Characteristic

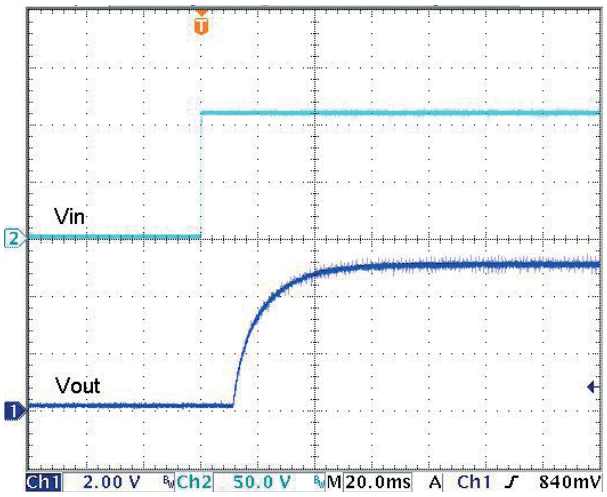

ON/OFF CTRL

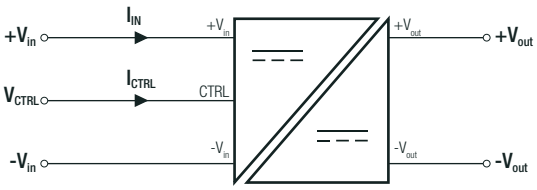

Positive Logic	DC-DC ON	Open or 3.0VDC < V_{CTRL} < 12VDC
	DC-DC OFF	Short or 0VDC < V_{CTRL} < 1.2VDC
Negative Logic	DC-DC ON	Short or 0VDC < V_{CTRL} < 1.2VDC
	DC-DC OFF	Open or 3.0VDC < V_{CTRL} < 12VDC

OUTPUT VOLTAGE TRIMMING

It allows the user to increase or decrease the output voltage of the module. This is accomplished by connecting an external resistor between the Trim pin and either the +Sense or -Sense pins. With an external resistor between the Trim and +Sense pin, the output voltage increases. With an external resistor between the Trim and -Sense pin, the output voltage decreases. The external Trim resistor needs to be at least 1/8W of rated. The values for trim resistors shown in trim tables below are according to standard E96 values; therefore, the specified voltage may slightly vary.

Trim up

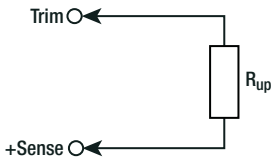

Trim down

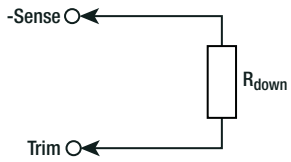

$Vout_{nom}$	= nominal output voltage	[VDC]
ΔVout	= output voltage change	[%]
V_{ref}	= reference voltage	[VDC]
R_{up}	= trim up resistor	[Ω]
R_{down}	= trim down resistor	[Ω]
R_3, R_4, R_5	= internal resistors	[Ω]

Model	R_1 [Ω]	R_2 [Ω]	R_3 [Ω]	V_{REF} [VDC]
RP40Q-11005RUW/N	10k2	511k	5k11	1.225VDC
RP40Q-11012RUW/N				
RP40Q-11015RUW/N				
RP40Q-11024RUW/N				
RP40Q-11048RUW/N				

Calculation:

$$R_{up} = \left[\frac{R_3 \times Vout_{nom} \times (100 + \Delta Vout)}{V_{ref} \times \Delta Vout}\right] - \left[\frac{(R_1 \times \Delta Vout) + R_2}{\Delta Vout}\right]$$

$$R_{down} = \left[\frac{R_2}{\Delta Vout}\right] - R_1$$

copyright © RECOM Power GmbH, all rights reserved

OUTPUT VOLTAGE TRIMMING

Practical Example RP40Q-xx05SRW +10% / -10%

$$R_{up} = \left[\frac{5k11 \times 5 \times (100 + 10)}{1.225 \times 10}\right] - \left[\frac{(10k2 \times 10) + 511k}{10}\right] = \mathbf{168k\Omega}$$

$$R_{down} = \left[\frac{511k}{10}\right] - 10k2 = \mathbf{40k9\Omega}$$

R_{up} according to E96 ≈ **169kΩ**

R_{down} according to E96 ≈ **41k2Ω**

RP40Q-xx05SRW

Trim up	1	2	3	4	5	6	7	8	9	10	[%]
$Vout_{set}$ =	5.05	5.10	5.15	5.20	5.25	5.30	5.35	5.4	5.45	5.50	[VDC]
R_{up} (E96) ≈	1M58	806k	536k	402k	324k	247k	237k	205k	187k	169k	[Ω]

RP40Q-xx12SRW

Trim up	1	2	3	4	5	6	7	8	9	10	[%]
$Vout_{set}$ =	12.12	12.24	12.36	12.48	12.60	12.72	12.84	12.96	13.08	13.20	[VDC]
R_{up} (E96) ≈	4M53	2M26	1M54	1M15	931k	787k	681k	604k	536k	487k	[Ω]

RP40Q-xx15SRW

Trim up	1	2	3	4	5	6	7	8	9	10	[%]
$Vout_{set}$ =	15.15	15.30	15.45	15.60	15.75	15.90	16.05	16.20	16.35	16.50	[VDC]
R_{up} (E96) ≈	5M76	2M94	1M96	1M47	1M21	1M02	866k	768k	698k	619k	[Ω]

RP40Q-xx24SRW

Trim up	1	2	3	4	5	6	7	8	9	10	[%]
$Vout_{set}$ =	24.24	24.48	24.72	24.96	25.20	25.44	25.68	25.92	26.16	26.40	[VDC]
R_{up} (E96) ≈	9M53	4M7	3M24	2M94	2M	1M69	1M47	1M27	1M15	1M05	[Ω]

RP40Q-xx48SRW

Trim up	1	2	3	4	5	6	7	8	9	10	[%]
$Vout_{set}$ =	48.48	48.96	49.44	49.92	50.40	50.88	51.36	51.84	52.32	52.80	[VDC]
R_{up} (E96) ≈	19M6	9M94	6M65	5M11	4M12	3M4	3M01	2M61	2M37	2M15	[Ω]

Trim Down all Vout's

Trim down	1	2	3	4	5	6	7	8	9	10	[%]
R_{down} (E96) ≈	499k	243k	162k	118k	90k9	75k	63k4	53k6	46k4	41k2	[Ω]

Trim down	11	12	13	14	15	16	17	18	19	20	[%]
R_{down} (E96) ≈	36k5	32k4	28k7	26k1	23k7	21k5	19k6	18k2	16k5	15k4	[Ω]

UNDER VOLTAGE LOCKOUT ADJUSTABILITY

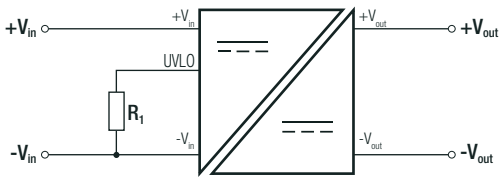

The RP40Q-RUWB series has an adjustable under voltage lockout which will shut down the converter according to following settings.

Nom. Input Voltage	24	36	48	72	96	110	[VDC]
Turn Off Threshold	12.4	19.6	26.8	41.2	55.6	64	[VDC]
Turn On Threshold	14.8	22	29.2	43.6	58	66.4	[VDC]
Resistor R_1	96.77	17.14	9.40	4.94	3.35	2.82	[kΩ]

copyright © RECOM Power GmbH, all rights reserved
www.recom-power.com

HOLD UP TIME SETTING

An additional BUS pin (version with suffix -B) supplies a fixed voltage for capacitor charging. Meeting S2, S3, and C2 conditions as described in EN50155 requires numerous aluminum electrolytic capacitors for ample energy. High voltage capacitors occupy significant space, posing challenges for limited specifications. To address varying system voltages, different capacitance values and withstand-voltage capacitors are needed.

The enhanced hold-up function resolves this by using the same capacitors for various system voltages and interruptions. This innovation is ideal for railway system power boards. Unlike conventional hold-up capacitors, the BUS pin consistently provides 21.4V, compatible with 25V rated capacitors for both 24V and 110V systems, ensuring a uniform solution in terms of capacitance value and quantity.

By connecting capacitors to the BUS pin, the inrush current is restricted effectively via the internal charging path that could reduce the extra external components of the whole system.

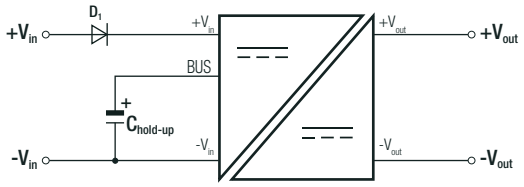

The formula provided below allows for the calculation of capacitor capacitance, with the potential for adjusting the margin based on practical application requirements.

$$C_{hold\text{-}up} = 0.0096 \times P_{IN} \times t$$

P_{IN}	= Input Power	[W]
t	= interruption duration	[s]
$C_{hold\text{-}up}$	= calculated capacitor	[µF]

Practical Example:

P_{OUT} = 40W
P_{IN} = 44.5W
V_{IN} = 110VDC
t = 0.01s

$C_{hold\text{-}up} = 0.0096 \times 44.5 \times 0.01 = 0.004272$ F

$C_{hold\text{-}up}$ **according to E96** ≈ 4220µF

REGULATIONS

Parameter	Condition	Value
Output Accuracy		±1.0% max.
Line Regulation	low line to high line, full load	±0.1% max.
Load Regulation	0% to 100% load	0.1% max.
Transient Response	25% load step change	250µs typ.

Transient Response to Dynamic Load change from 100% to 75% to 100% of Full Load at nom. Vin

RP40Q-11005SRUW

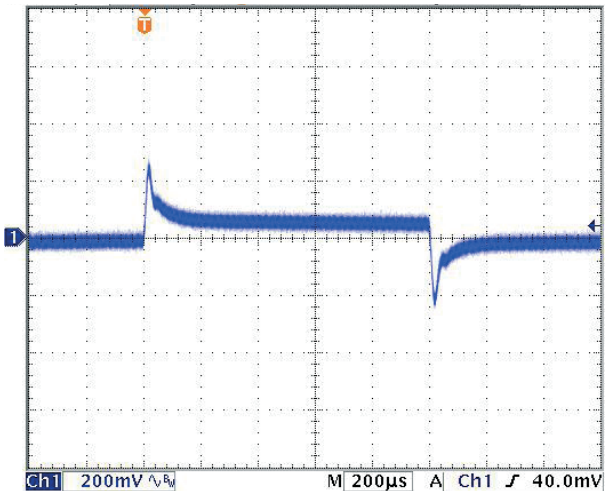

copyright © RECOM Power GmbH, all rights reserved

PROTECTIONS

Parameter	Condition			Value
Short Circuit Protection (SCP)	below 100mΩ			continuous, hiccup mode, automatic recovery
Over Voltage Protection (OVP)				120-135%, hiccup mode
Over Current Protection (OCP)				120-140%, hiccup mode
Over Temperature Protection (OTP)				+115°C ±5°C
Isolation Voltage [9]	nom. V_{IN}= 110VDC	I/P to O/P	rated for 1 minute	3kVAC
		I/P, O/P to Baseplate	rated for 1 minute	1.5kVAC
Isolation Resistance	tested with 500VDC			1GΩ min.
Isolation Capacitance				1000pF max.
Leakage Current				2250µA
Insulation Grade	<2000m			reinforced (based on Electric Strength Test)
	>2000m up to 5000m			functional

Note9: For repeat Hi-Pot testing, reduce the time and/or the test voltage
Note10:Refer to local safety regulations if input over-current protection is also required. Recommended fuse: T5A slow blow type

ENVIRONMENTAL

Parameter	Condition		Value
Operating Temperature Range	refer to **„Thermal Calculation“**		-40°C to +105°C
Maximum Baseplate Temperature			+110°C
Temperature Coefficient			±0.02%/K
Thermal Impedance	vertical direction by natural convection (0.1m/s)	without Heat-sink	6.3K/W
		with Heat-sink	5.0K/W
Operating Humidity			5%-95% RH
Thermal Shock			according to EN61373 standard
Vibration			according to EN61373 standard
Fire Protection on Railway Vehicles			according to EN61373 standard
MTBF	according to MIL-HDBK-217F standard, G.B.	+25°C	880 x 10^3 hours
		+85°C	150 x 10^3 hours

Thermal Calculation

$$R_{th} = \left[\frac{T_{baseplate\ max} - T_{amb}}{P_{diss}} \right]$$

$$P_{diss} = \left[\frac{P_{out\ set}}{\eta} \right] - P_{out\ set}$$

$T_{baseplate\ max.}$	= baseplate temperature	[°C]
T_{amb}	= ambient temperature	[°C]
$P_{out\ nom.}$	= nom. output power	[W]
$P_{out\ set}$	= output power set	[W]
P_{diss}	= internal losses	[W]
R_{th}	= thermal impedance	[K/W]
η	= efficiency under given operating conditions	[%]

Practical Example:

Take the **RP40Q-11005SRUW** with 48V Input Voltage and 50% load, natural convection 0.1m/s, in vertical application.
What is the maximum ambient operating temperature?

$T_{baseplate\ max.}$ = 110°C
$P_{out\ nom.}$ = 40W
$P_{out\ set}$ = 40 x 0.5 = 20W
R_{th} = 6.3K/W (vertical)
η = 91% (Graph)

$$P_{diss} = \left[\frac{20}{0.91} \right] - 20 = 1.98W$$

$$6.3 = \frac{110 - T_{amb}}{1.98}$$

$$R_{th} = \left[\frac{T_{baseplate\ max} - T_{amb}}{P_{diss}} \right]$$

$$T_{amb} = \underline{97.5°C}$$

copyright © RECOM Power GmbH, all rights reserved

ENVIRONMENTAL

Derating Graph

(@ Chamber - tested with double layer PCB: 160x100mm 105µm Eurocard)

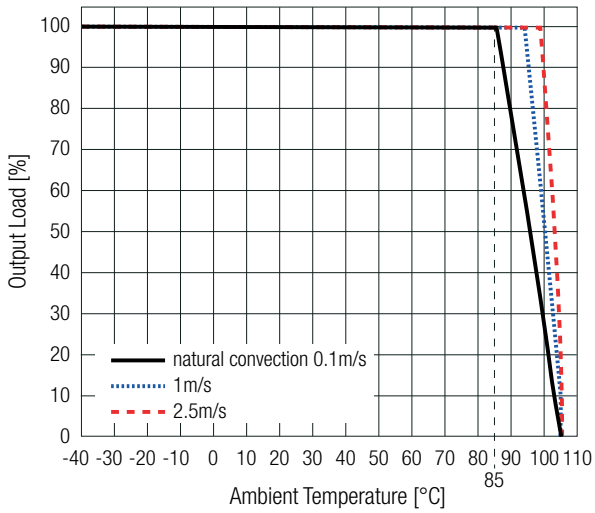

Derating Graph

(@ Chamber - tested with double layer PCB: 160x100mm 105µm Eurocard)

Take the **RP40Q-11005SRUW-HC** with 48V Input Voltage, 50% load, natural convection 0.1m/s, in vertical application and Heat-sink.
What is the maximum ambient operating temperature?

$T_{baseplate\ max.}$ = 110°C
$P_{out\ nom.}$ = 40W
$P_{out\ set}$ = 40 x 0.5 = 20W
R_{th} = 5.0K/W (vertical)
η = 91% (Graph)

$$P_{diss} = \left[\frac{20}{0.91}\right] - 20 = 1.98W$$

$$R_{th} = \left[\frac{T_{baseplate\ max} - T_{amb}}{P_{diss}}\right]$$

$$5.0 = \frac{110 - T_{amb}}{1.98}$$

$$T_{amb} = \underline{\mathbf{100°C}}$$

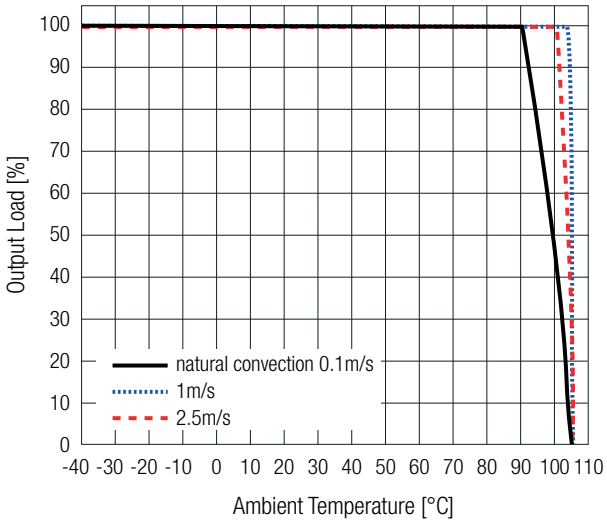

SAFETY AND CERTIFICATION

Certificate Type (Safety)	Report / File Number	Standard
Audio/video, information and communication technology equipment. Safety requirements	LVD1809046-1 + LVD1903037-1-M1	EN62368-1:2014 + A11:2017 IEC62368-1:2014, 2nd Edition
Railway applications - Electrical equipment used on rolling stock	T181022L06-RL	EN50155:2017
Environmental testing Part 2-1: Tests – Test A: Cold		DIN EN60068-2-1:2008-01
Environmental testing Part 2-2: Tests – Test B: Dry heat		DIN EN60068-2-2:2008-05
Environmental testing Part 2-30: Tests - Test Db: Damp heat, cyclic		DIN EN60068-2-30:2006-06
Railway applications – Rolling stock equipment – Shock and vibration tests		EN61373:2010
Audio/video, information and communication technology equipment-Part1: Safety requirements	E196683	UL62368-1:2014 CAN/CSA-C22.2 No. 62368-1:2014
RoHS2		RoHS 2011/65/EU + AM2015/863

copyright © RECOM Power GmbH, all rights reserved

SAFETY AND CERTIFICATION

EMC Compliance (Railway)	Condition	Standard / Criterion
Railway applications - Electromagnetic compatibility		EN50121-3-2:2016
Information technology equipment - Radio disturbance characteristics - Limits and methods of measurement		EN55032:2010
ESD Electrostatic discharge immunity test	Air: ±2, 4, 8kV, Contact: ±2, 4, 6kV	EN61000-4-2:2009, Criteria A
Radiated, radio-frequency, electromagnetic field immunity test	20V/m (80-1000MHz) 10V/m (1400-2000MHz) 5V/m (2000-2700MHz) 3V/m (5100-6000MHz)	EN61000-4-3:2006 + A2:2010, Criteria A
Fast Transient and Burst Immunity	DC Power Port: ±2kV	EN61000-4-4:2012, Criteria A
Surge Immunity	DC Power Port: ±2kV	EN61000-4-5:2014, Criteria A
Immunity to conducted disturbances, induced by radio-frequency fields	DC Power Port: 10V	EN61000-4-6:2014, Criteria A
Power Magnetic Field Immunity	50Hz, 100A/m, 1000A/m	EN61000-4-8:2009, Criteria A
Electromagnetic compatibility of multimedia equipment - Emission requirements	with external filter (see filter suggestion below)	EN55032:2015 + AC:2016-07, Class A
EMC Compliance (Multimedia)	**Condition**	**Standard / Criterion**
Information technology equipment - Immunity characteristics - Limits and methods of measurement		EN55024:2010 + A1:2015
ESD Electrostatic discharge immunity test	Air: ±2, 4, 8kV, Contact: ±2, 4, 6kV	IEC61000-4-2:2008, Criteria A
Radiated, radio-frequency, electromagnetic field immunity test	3V/m (80-1000MHz) 20V/m (80-1000MHz) 10V/m (1400-2000MHz) 5V/m (2000-2700MHz) 3V/m (5100-6000MHz)	IEC61000-4-3:2006 + A2:2010, Criteria A
Fast Transient and Burst Immunity	DC Power Port: ±0.5, 2kV	IEC61000-4-4:2012, Criteria A
Surge Immunity	DC Power Port: L-N ±0.5, 1kV	IEC61000-4-5:2014, Criteria A
Immunity to conducted disturbances, induced by radio-frequency fields	DC Power Port: 3V, 10V	IEC61000-4-6:2013, Criteria A
Power Magnetic Field Immunity	50/60Hz, 1, 100, 1000A/m	IEC61000-4-8:2009, Criteria A

Note11: An external input filter capacitor is required if the module has to meet EN61000-4-4 and EN61000-4-5
Recom suggests: 2 pcs. 150µF/200V connected in parallel

EMC Filtering according to EN55032 Class A

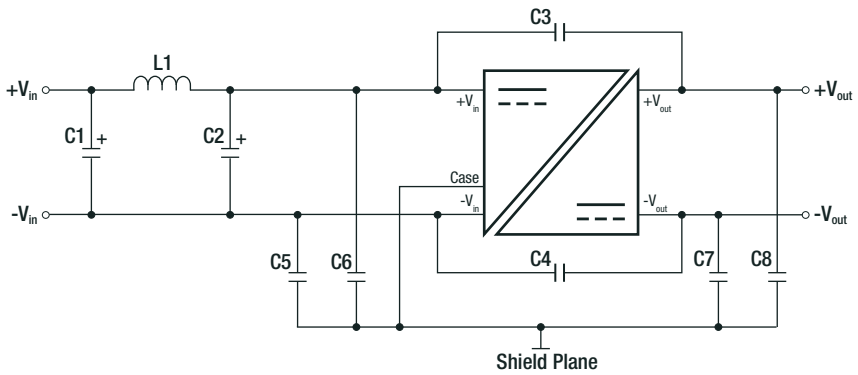

Component List Class A

C1	L1	C2	C3, C4	C5, C6, C7, C8
47µF, 200V	8.2µH	47µF, 200V	1000pF, 400VAC	1000pF, 250VAC 1808 MLCC

copyright © RECOM Power GmbH, all rights reserved

RP40Q-RUW Series ◊ Quarter Brick

40W ◊ Ultra-Wide Input: 14V-160VDC

RECOM DC/DC Converter

DIMENSION & PHYSICAL CHARACTERISTICS

Parameter	Type	Value
Material	baseplate	aluminum
	case	plastic, (UL94 V-0)
	potting	low smoke silicone, (UL94 V-0)
	PCB	FR4, (UL94 V-1)
Dimension (LxWxH)	without Heat-sink	57.9 x 36.8 x 12.7mm 2.28 x 1.45 x 0.5 inch
	with Heat-sink	57.9 x 36.8 x 25.4mm 2.28 x 1.45 x 1.0 inch
Weight	without Heat-sink	64.0g typ. 0.141 lbs
	with Heat-sink	88.0g typ. 0.194 lbs

Dimension Drawing (mm)

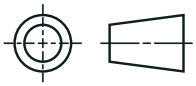

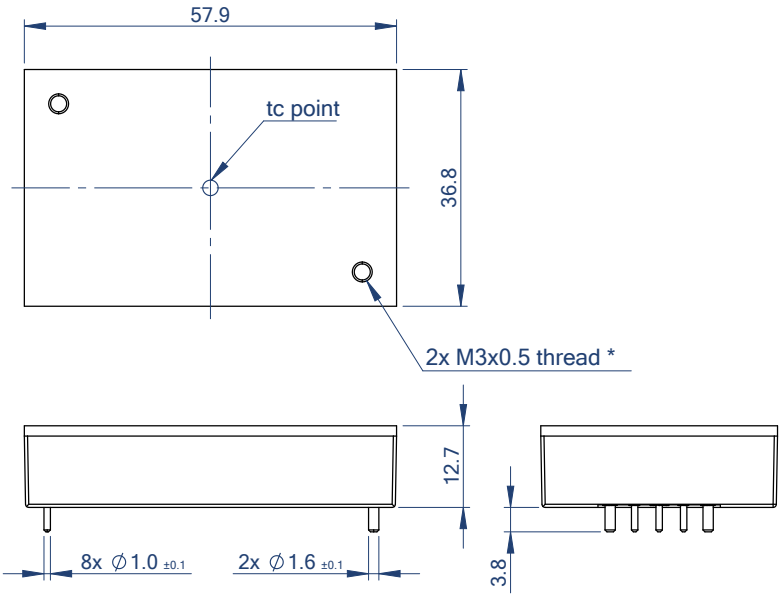

Pinning Information

Pin #	Function	Pin Ø
1	-Vin	1.0mm
2	CTRL	1.0mm
3	+Vin	1.0mm
4	-Vout	1.6mm
5	-Sense	1.0mm
6	Trim	1.0mm
7	+Sense	1.0mm
8	+Vout	1.6mm
9	BUS	1.0mm
10	UVLO	1.0mm

FC= Fixing Centers for Heat-sink
*recommended tightening torque: 0.34Nm

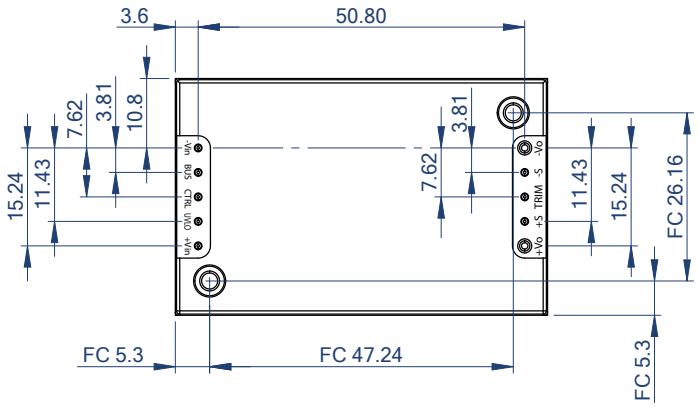

Recommended Footprint Detail

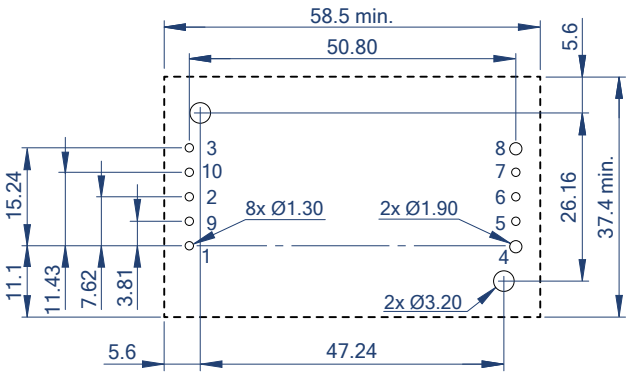

Tolerances:
x.x= ±0.5mm
x.xx= ±0.25mm

copyright © RECOM Power GmbH, all rights reserved

DIMENSION & PHYSICAL CHARACTERISTICS

Dimension Drawing pre-mounted Heat-sink (mm)

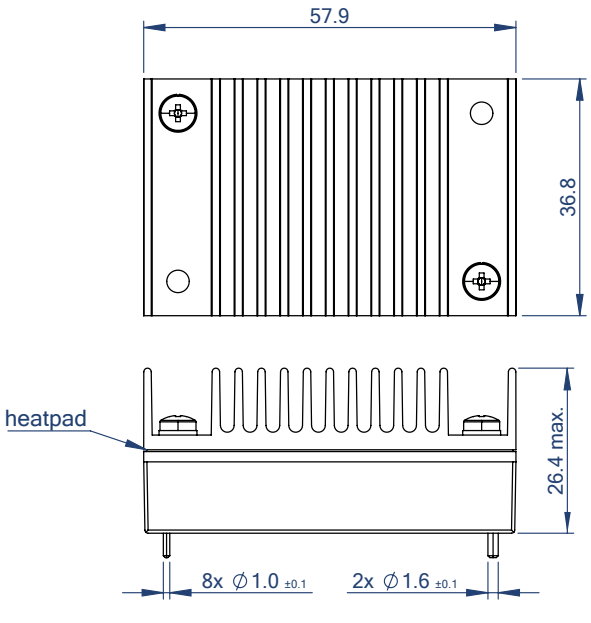

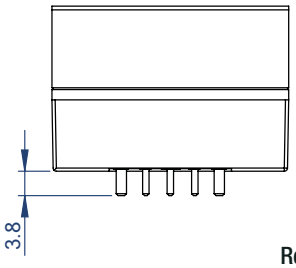

Pinning Information

Pin #	Function	Pin Ø
1	-Vin	1.0mm
2	CTRL	1.0mm
3	+Vin	1.0mm
4	-Vout	1.6mm
5	-Sense	1.0mm
6	Trim	1.0mm
7	+Sense	1.0mm
8	+Vout	1.6mm
9	BUS	1.0mm
10	UVLO	1.0mm

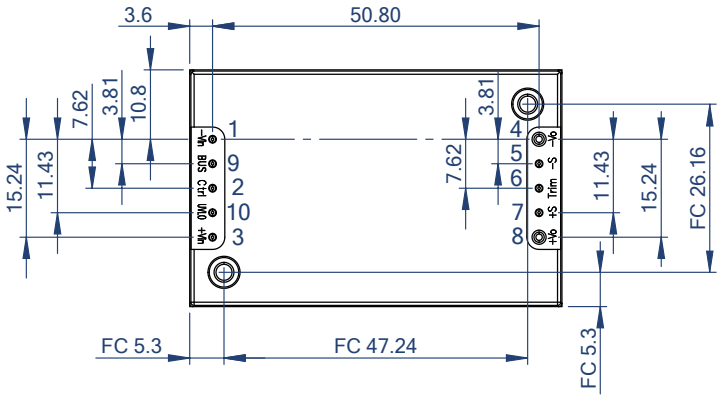

Recommended Footprint Detail

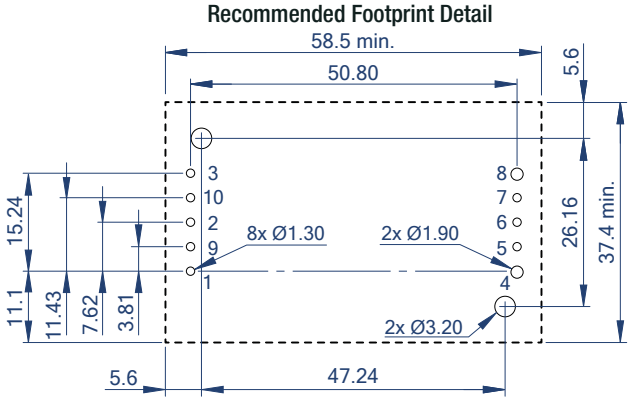

Tolerances:
x.x= ±0.5mm
x.xx= ±0.25mm

BLOCK DIAGRAM

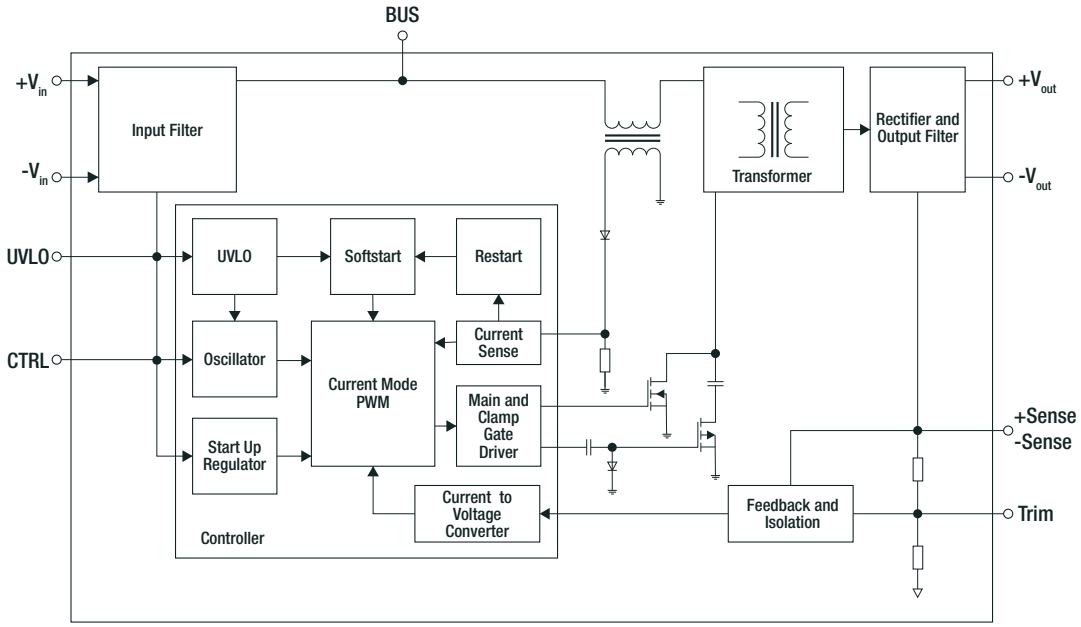

copyright © RECOM Power GmbH, all rights reserved

PACKAGING INFORMATION

Parameter	Type		Value
Packaging Dimension (LxWxH)	tray	without Heat-sink	157.0 x 88.0 x 23.0mm
		with Heat-sink	157.0 x 88.0 x 35.0mm
Packaging Quantity			2pcs
Storage Temperature Range			-55°C to +125°C
Storage Humidity	non-condensing		5% - 95% RH

The product information and specifications may be subject to changes even without prior written notice.The product has been designed for various applications; its suitability lies in the responsibility of each customer. The products are not authorized for use in safety-critical applications without RECOM's explicit written consent. A safety-critical application is an application where a failure may reasonably be expected to endanger or cause loss of life, inflict bodily harm or damage property. The applicant shall indemnify and hold harmless RECOM, its affiliated companies and its representatives against any damage claims in connection with the unauthorized use of RECOM products in such safety-critical applications.

copyright © RECOM Power GmbH, all rights reserved