Features

ICE Technology*

- Tx Temperature Range without Derating
- 120°C Maximum Case Temperature
- -45°C Minimum Operating Temperature
- EN 50155 Certified
- EN 50121-3-2 Certified
- CE Marked
- 24, 48 and 110VDC Input Ranges
- Six Sided Shielded Enclosure
- Ribbed or Baseplate Case Styles
- Efficiency to >89%
- Low Quiescent Current

POWERLINE+
Railway-Converter
with 5 year Warranty

RECOM

20 Watt Single & Dual Output



RoHS 2011/65/EU 6/6

CE

EN-50155 Certified
EN-60950-1 Certified

RPR20

Description

The RPR20 series DC/DC converters are designed for railway rolling stock applications. Besides covering all the input voltages from 24VDC up to 110VDC, the converters have a very wide operating temperature range of -45°C to +85°C without derating. Although the case size is very compact, the converter contains a built-in EMI filter, so no active external filter components are required. The RPR20 is available in two case styles: a ribbed case with a built-in heatsink and the baseplate case for high vibration or bulkhead mounting applications. They are EN 50155 and EN 50121-3-2 compliant.

Selection Guide 24V, 48V and 110V Input Types

Part Number	Nominal Input VDC	Nom. Input Range VDC	Lockout Voltage VDC	Output Voltage VDC	Output Current mA
RPR20-243.3S**	24	12-36	8	3.3	6000
RPR20-2405S**	24	12-36	8	5	4000
RPR20-2412S**	24	12-36	8	12	1666
RPR20-2415S**	24	12-36	8	15	1333
RPR20-2424S**	24	12-36	8	24	830
RPR20-483.3S**	48	25-75	17	3.3	6000
RPR20-4805S**	48	25-75	17	5	4000
RPR20-4812S**	48	25-75	17	12	1666
RPR20-4815S**	48	25-75	17	15	1333
RPR20-4824S**	48	25-75	17	24	830
RPR20-1103.3S**	110	40-160	36	3.3	6000
RPR20-11005S**	110	40-160	36	5	4000
RPR20-11012S**	110	40-160	36	12	1666
RPR20-11015S**	110	40-160	36	15	1333
RPR20-11024S**	110	40-160	36	24	830
RPR20-2412D**	24	12-36	8	±12	±833
RPR20-2415D**	24	12-36	8	±15	±666
RPR20-2424D**	24	12-36	8	±24	±416
RPR20-4812D**	48	25-75	17	±12	±833
RPR20-4815D**	48	25-75	17	±15	±666
RPR20-4824D**	48	25-75	17	±24	±416
RPR20-11012D**	110	40-160	36	±12	±833
RPR20-11015D**	110	40-160	36	±15	±666
RPR20-11024D**	110	40-160	36	±24	±416

** add suffix "-B" for Baseplate case and no suffix is the Ribbed case.

For other CTRL logic or case style options please contact RECOM for availability.

*** ICE Technology**

ICE (Innovation in Converter Excellence) uses state-of-the-art techniques to minimise internal power dissipation and to increase the internal temperature limits to extend the ambient operating temperature range to the maximum.

Refer to Application Notes

Railway Input Voltage Requirements

Nominal Input Voltage	EN50155			NF F 01-510			RPR20		
	Input Range	Min. Input (0.1s)	Max Input (1s)	Input Range	Min. Input (0.1s)	Max Input (1s)	Input Range	Min. Input (0.1s)	Max Input (1s)
24V	16.8~30V	14.4V	33.6V	18~34V	12V	40V	12~36V	9V	40V
48V	33.6~60V	28.8V	67.2V				25~75V	18V	80V
72V	50.4~90V	43.2V	100.8V	50~90V	36V	115V	40~160V	36V	176V
96V	67.2~120V	57.6V	134.4V				40~160V	36V	176V
110V	77~137.5V	66V	154V	77~137V	55V	176V	40~160V	36V	176V

Specifications (typical at nominal input and 25°C unless otherwise noted)

Input Voltage Range (continuous)	complies with EN50155 and NFF 01-510 (Un=24V)	12-36VDC
	complies with EN50155 and NFF 01-510 (Un=48V)	25-75VDC
	complies with EN50155 and NFF 01-510 (Un=72V, 96V &110V)	40-160VDC
Low Transient operating voltage (100ms)	complies with EN50155 and NFF 01-510	Un x 0.5
High Transient operating voltage (1 second)	complies with EN50155 and NFF 01-510	Un x 1.6
Allowed Input Ripple	complies with EN50155	15%
Input Reflected Ripple	nominal Vin and full load	20mAp-p
Supply Interruption (Perf. Criteria B)	according to EN50155, 5.1.1.2	Class S2
	according to EN50155, 5.1.3	Class C2
Start Up Time	nominal Vin and constant resistive load	2ms typ., 5ms max.
Remote ON/OFF (1)	Logic High	Open or 8V < Vr < 60V
	Logic Low	Short or 0V < Vr < 1.2V
Remote OFF input current	Nominal input	2mA typ.
Output Voltage Accuracy	50% Load and nominal Vin	±1.5%
Voltage Adjustability	Single Output only	±10%
Minimum Load		0%
Line Regulation	low line, high line at full load	±0.3%
Load Regulation	10% to 100% full load	±0.5%
Cross Regulation (10% <> 100% Load)	Dual Outputs only	3% typ. / 5% max.
Ripple and Noise (20MHz bandwith limited)	(measured with 1µF capacitor across outputs)	1% Vout typ. / 3% max.
Temperature Coefficient		±0.04%/°C max.
Transient Response	25% load step change	800µs
Over Load Protection	% of full load at nominal Vin	120% typ.
Short Circuit Protection		Power Limit, automatic recovery
Output Over Voltage Protection	Single Output	Converter shutdown if Vout > Vout nominal + 20%
	Dual Output	Converter shutdown if Vout > Vout nominal + 10%
Isolation Voltage	According to EN50155 12.2.9.2	1500VAC/1 minute
Isolation Resistance	According to EN50155 12.2.9.1	10MΩ min.
Isolation Capacitance		1500pF max.
Operating Frequency		260kHz ± 40kHz
Operating Temperature Range (Tx)	complies with EN50155: 4.1.2 and EN50125-1	-45°C to +85°C
(Ambient Air, Free Convection)	with derating	-45°C to +100°C
Maximum Case Temperature		+120°C
Over Temperature Protection		Internal thermistor
Storage Temperature Range		-55°C to +125°C
Relative Humidity		5% to 95% RH
Case Material (2)		Aluminium

continued on next page

Specifications (typical at nominal input and 25°C unless otherwise noted)

Weight	Ribbed Case	26g
	Baseplate Case	43g
Packing Quantity	Ribbed Case	4 pcs per Tube
	Baseplate Case	Single packed
Safety Standards	CE Marked	certified to EN-60950-1, 1st Edition
Thermal Performance	Cold	-40°C /16 Hours
	Dry Heat, Operating	-40°C/+85°C/ 5 Cycles
complies to EN50155: 12.2.3/4/5	Damp Heat,Cyclic	+25°C/+55°C, 95%RH / 2 x 24 Hours
Vibration, Shock & Bump (complies with EN61373, Category 1 Class B)	Vibration	5-150Hz, X:0.7m/s², Y:0.45m/s², Z:1m/s², 30 mins
	Shock	5g/30ms/18 shocks
Input Filter		Built-in Pi Filter
Conducted Emissions	EN50121-3-2***	Class A
Radiated Emissions	EN50121-3-2***	Class A
ESD	EN50121-3-2***	Perf. Criteria B
Radiated Immunity	EN50121-3-2***	Perf. Criteria A
Fast Transient	EN50121-3-2***	Perf. Criteria A
Surge	EN50121-3-2***	Perf. Criteria B
Conducted Immunity	EN50121-3-2***	Perf. Criteria A
MTBF calculated according to BELLCORE TR-NWT-000332 Case I: 50% Stress, Temperature at 50°C (Ground Benign)		2195 x 10^3 hours

***with filter circuit

Recommended PCB Layout

Ribbed Case

Single Output

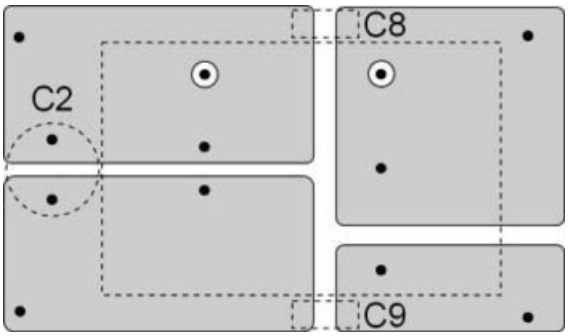

Dual Output

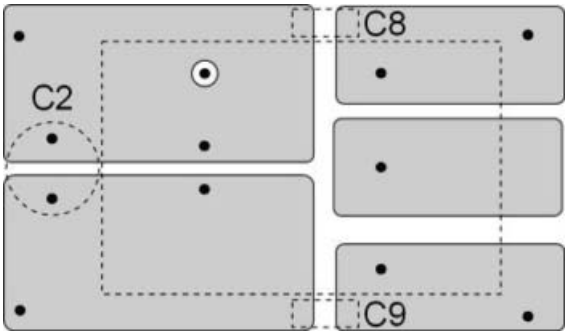

Baseplate Case- suggested PCB layout

Single Output

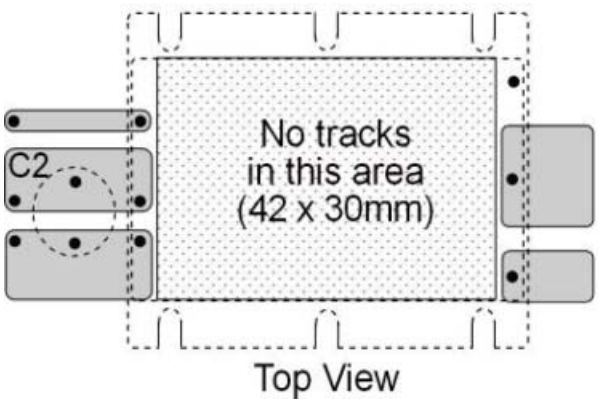

Dual Output

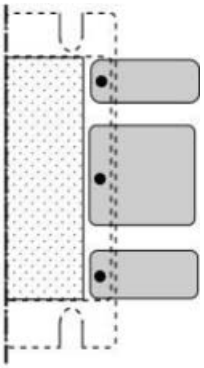

Input Fuse is recommended. Recommended fuse rating = double maximum input current, time delay type.

To ensure optimum thermal performance, use large areas of copper on the PCB to assist with heat dissipation and mount the converter vertically.

Typical Application Circuit

EN50155 / NF F 01-510 Input Filter

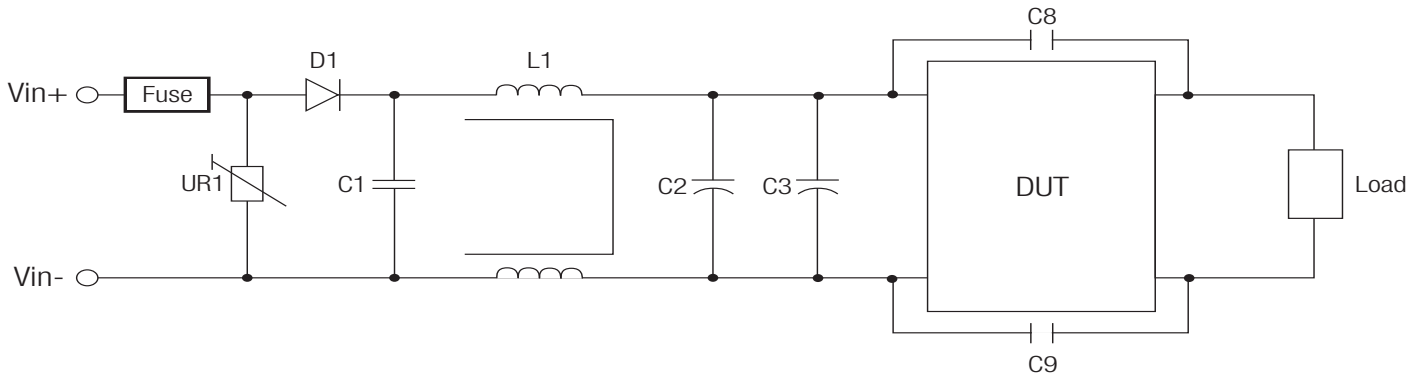

Table

Module	Standard	UR1	D1	C1	L1	C2	C3	C8,C9
24V	EN50155	MOV 14D361K	100V/6A	6,8µF/50V	550µH±20%	330µF/ 50VDC	330µF/ 50VDC	4,7nF/3kV
48V	EN50155	MOV 14D361K	200V/3A	220nF/100V	550µH±20%	330µF/ 100VDC	330µF/ 100VDC	4,7nF/3kV
110V	EN50155	MOV 14D361K	300V/3A	470nF/250V	1200µH±20%	330µF/ 250VDC	330µF/ 250VDC	4,7nF/3kV

Notes :

1. The ON/OFF pin voltage is referenced to negative input. The pin is pulled high internally.
   ON/OFF control is standard with positive logic: e.g. RPR20-2405S, RPR20-4805D-B.
   Positive logic: 0= OFF, 1 = ON. The converter will be ON if the CTRL is left open.
2. To ensure a good all-round electrical contact, the baseplate is pressed firmly into place within the aluminium housing.The hydraulic press can leave tooling marks and deformations to both the housing and baseplate. The case is anodised aluminium, so there will be natural variations in the case colour and the aluminium is not scratch resistant. Any resultant marks, scratches and colour varations are cosmetic only and do not affect the operation or performance of the converters.
3. The converter is supplied with a protective adhesive tape to keep the top surface clean. The tape is heat resistant and the converter can be soldered into place without removing the tape. The tape should be removed just before final installation.

Typical Control Pin Application Circuit

The CTRL pin can be directly driven with a 24V or 48V signal, or via a transistor with a 5V signal.

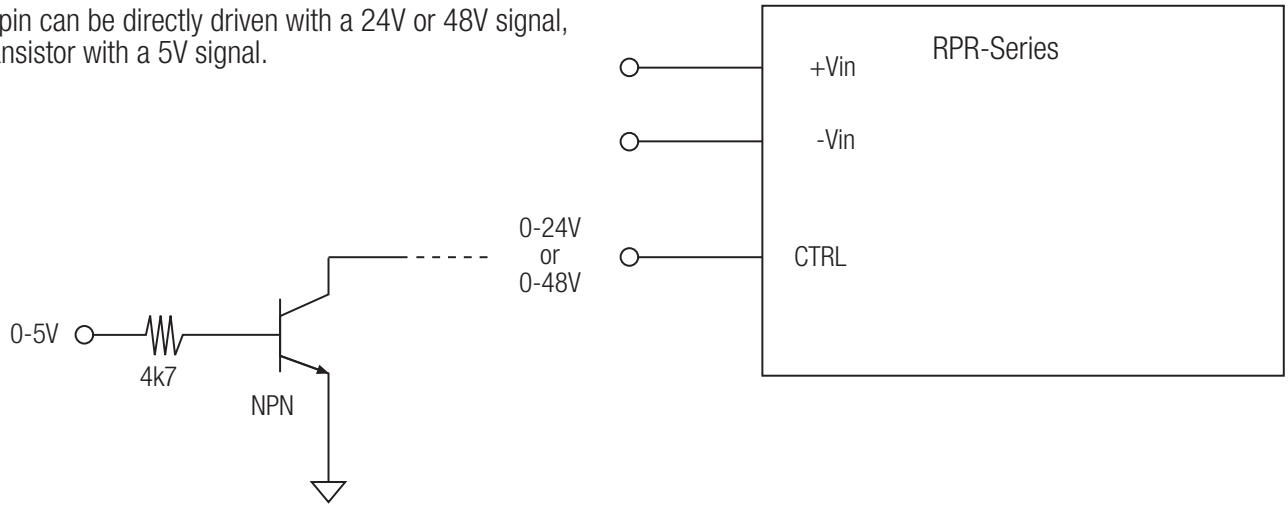

Package Style and Pinning (mm)

Ribbed Case (No suffix)

3rd angle projection

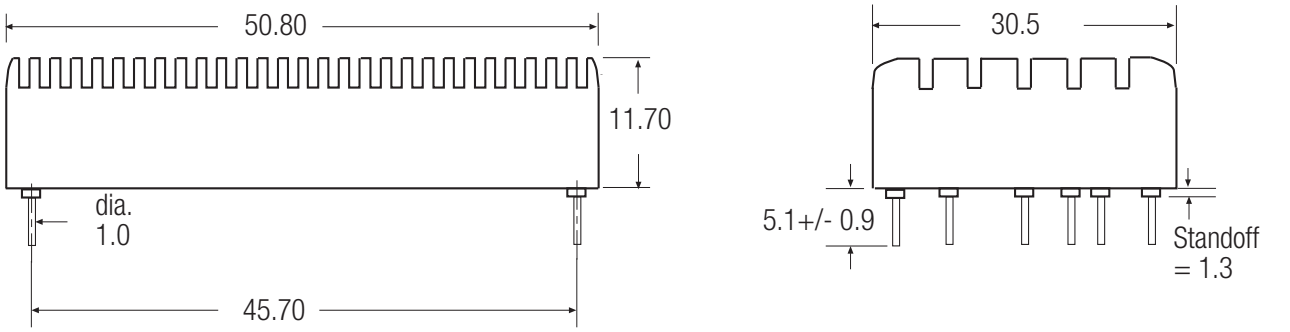

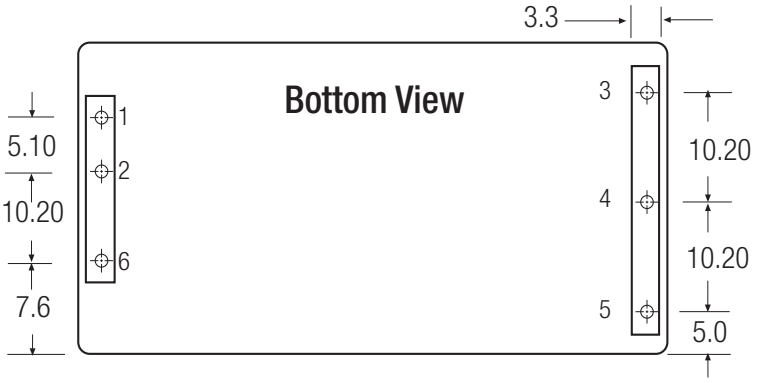

Pin Connections

Pin #	Single	Dual
1	+Vin	+Vin
2	-Vin	-Vin
3	+Vout	+Vout
4	-Vout	Com
5	Trim	-Vout
6	CTRL	CTRL

Pin Pitch Tolerance ±0.35 mm

Package Style and Pinning (mm)

Baseplate Case (-B Suffix)

3rd angle projection

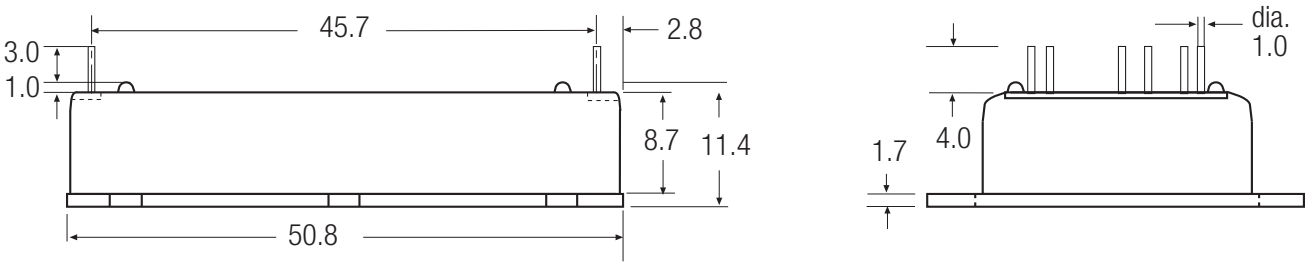

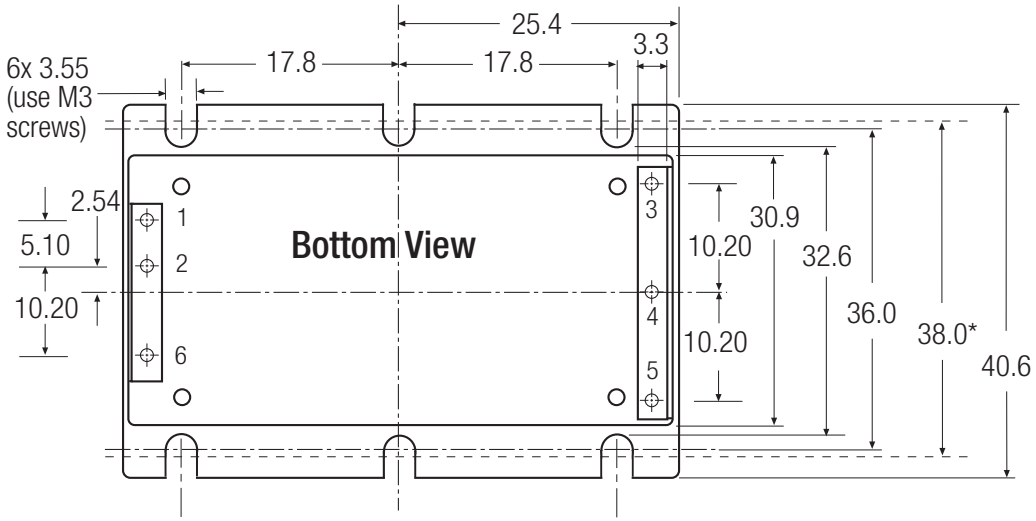

*Recommended Fixing Centres

NOTE: Single output pinout is different for the -B version!

Pin Connections

Pin #	Single	Dual
1	+Vin	+Vin
2	-Vin	-Vin
3	+Vout	+Vout
4	-Vout	Com
5	Trim	-Vout
6	CTRL	CTRL

Pin Pitch Tolerance ±0.35 mm

RPR20

Baseplate Case Fixing - Mounting onto Heatsink/Bulkhead

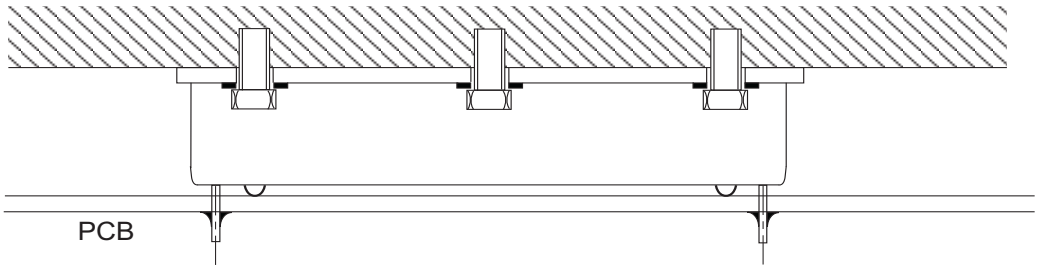

Baseplate Case Fixing - Anti Vibration Mounting onto PCB

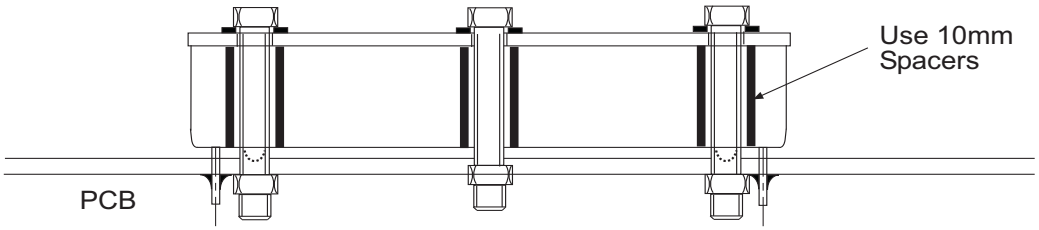

I.C.E Technology

ICE (Innovation in Converter Excellence) Technology uses a combination of techniques to minimise internal heat dissipation and maximise the heat transfer to ambient to create a new converter series which offers high end performance at a price which is significantly lower than conventional specialist converters.

The exact details of this technology must remain secret, but the following brief resume describes the main features of this technological breakthrough:

Minimising internal heat dissipation

The difference between the input power and the output power is the internal power dissipation which generates heat within the converter.

If the converter is inefficient at converting power, then adding external heat sinks, baseplates or fans are remedies that cure the symptoms rather than address the illness.

First and foremost, the converter must have the highest possible efficiency over the entire input voltage range and load conditions. Most power converters are designed to be most efficient at 25°C, full load and nominal input voltage and thus offer a compromise performance when lightly loaded or operated at the maximum ambient temperature.

ICE Technology uses state-of-the-art techniques to improve power convertion efficiency by approximately 2% compared to standard converters. A two per cent improvement may not sound much, but the difference between a converter with 88% efficiency and one with 90% efficiency is a 17% reduction in the dissipated power. In addition, when lightly loaded, the converters enter a power saving mode and draw only a few milliamps from the supply.

Maximising heat transfer

The rate of heat transfer between a hot body and its cooler surroundings is given by Fourier's Law:

$$q=-k.\Delta T$$

where

q = rate of heat transfer

k = thermal conductivity

and ΔT = temperature difference

If k can be made larger, then the rate of heat transfer can still match or exceed the rate of heat generation at lower temperature differences ΔT and the converter will have an extended operating temperature range.

Techniques to improve thermal conductivity

ICE Technology splits the thermal conductivity problem into two areas and attacks each area seperately using different techniques.

Firstly, the internal heat transfer to the case is maximised by a combination of novel converter construction and clever thermal design.

ICE converters use a construction where the hottest components (the switching FET, the transformer and the synchronous rectification FETs) are placed closest to the case wall. This method of construction makes the manufacture of the converter more difficult, but this lack of compromise reduces greatly the internal thermal impedance.

Secondly, the rate of transfer of heat to the surroundings is improved by a novel case construction which incorporates a built-in heat sink. The case is also made from thick aircraft grade aluminium rather than thin nickel-plated copper to provide a better thermal junction between the case and the high thermal conductivity silicone potting material used inside the converter.

Maximising high temperature performance

The final technique used in the construction of ICE Technology converters is to use high temperature internal components. The maximum operating temperature of a converter is dependent on the lowest maximum permissible operating temperature of any the components used. If the capacitors are rated up to +85°C and the FETs are rated at +160°C, then the limiting factor is the capacitor temperature of +85°C.

The temperature of the ferrite core used in the transformer is also an important limiting factor. If the transformer core temperature exceeds the Curie temperature of the ferrite, then the transformer rapidly loses performance.

ICE Technology converter uses high temperature grade components to permit a case temperature of +115°C maximum. This allows operation at up to +85°C ambient without the need for fans to blow air over the converter.

THINK GREEN HIGH EFFICIENCY

Electromagnetic Compatibility

Although high temperature performance is a significant feature of ICE Technology design, it does not end there.

ICE Technology also addresses the need for electromagnetic compatibility by incorporating a built-in EN55022 Class B grade filter inside the converter. The converter has been designed from the ground up to meet EMC requirements rather than a conventional design process where first the converter is optimised for performance and then an external filter is added to combat the conducted interference.

By including the filter on the main PCB of the converter, the track path lengths and impedances between the filter and the noise-generating components are reduced to the minimum and consequently smaller value filter components can be used that fit into the compact case dimensions of the Powerline+ converters without compromising on filter performance.

Safety and Protection

ICE Technology converters are fully protected from output short circuits, overload, output over-voltage and over-temperature. In addition, they feature under-voltage lockout that will automatically disable the converter if the input voltage falls below the minimum level.

The output is current limited which means that temporary overloads can occur without the converter shutting down. When overloaded, the output voltage will decrease to keep the maximum power constant. For the 40W and 50W converters, if the overload is too high, the converter will go into hiccup short circuit protection mode. In this mode, the converter will attempt to reconnect power every 10-20 milliseconds.

Output overvoltage protection is monitored by a separate and independent feedback circuit and an internal thermistor sensor is used to protect the converter against overheating.

POWERLINE+ Application Notes

DC/DC-Converter

Powerline Plus Output Trim Tables

Output Voltage Trimming:

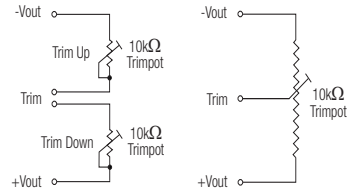

Single output Powerline Plus converters offer the feature of trimming the output voltage over a certain range around the nominal value by using external trim resistors.

No general equation can be given for calculating the trim resistors, but the following trimtables give typical values for chosing these trimming resistors.

If voltages between the given trim points are required, extrapolate between the two nearest given values to work out the resistor required or use a variable resistor to set the output voltage.

RPRxx-xx3.3S (all types)

Trim up	1	2	3	4	5	6	7	8	9	10	%
Vout =	3,333	3,366	3,399	3,432	3,465	3,498	3,531	3,564	3,597	3,63	Volts
R_U =	72.8	34.4	21.2	14.4	9.9	7.2	5.3	3.88	2.74	1.84	KOhms
Trim down	1	2	3	4	5	6	7	8	9	10	%
Vout =	3,267	3,234	3,201	3,168	3,135	3,102	3,069	3,036	3,003	2,97	Volts
R_D =	101.3	36.2	21.0	13.65	9.2	6.0	4.12	2.56	1.34	0.87	KOhms

RPRxx-xx05S (all types)

Trim up	1	2	3	4	5	6	7	8	9	10	%
Vout =	5,05	5,1	5,15	5,2	5,25	5,3	5,35	5,4	5,45	5,5	Volts
R_U =	109.7	51	31.2	20.3	14.2	9.87	7.1	5.0	3.38	2.08	KOhms
Trim down	1	2	3	4	5	6	7	8	9	10	%
Vout =	4,95	4,9	4,85	4,8	4,75	4,7	4,65	4,6	4,55	4,5	Volts
R_D =	127.6	55.8	33.0	20.2	14.2	9.46	5.97	3.6	1.77	0.28	KOhms

RPRxx-xx12S (all types)

Trim up	1	2	3	4	5	6	7	8	9	10	%
Vout =	12,12	12,24	12,36	12,48	12,6	12,72	12,84	12,96	13,08	13,2	Volts
R_U =	270	120	70	45.2	30.1	19.8	12.8	7.52	3.31	0	KOhms
Trim down	1	2	3	4	5	6	7	8	9	10	%
Vout =	11,88	11,76	11,64	11,52	11,4	11,28	11,16	11,04	10,92	10,8	Volts
R_D =	270	120	70	45.2	30.1	19.8	12.8	7.52	3.31	0	KOhms

RPRxx-xx15S (all types)

Trim up	1	2	3	4	5	6	7	8	9	10	%
Vout =	15,15	15,3	15,45	15,6	15,75	15,9	16,05	16,2	16,35	16,5	Volts
R_U =	337	150	87	56.2	37.5	24.7	16	9.4	4.16	0	KOhms
Trim down	1	2	3	4	5	6	7	8	9	10	%
Vout =	14,85	14,7	14,55	14,4	14,25	14,1	13,95	13,8	13,65	13,5	Volts
R_D =	337	150	87	56.2	37.5	24.7	16	9.4	4.16	0	KOhms

Powerline Plus Output Trim Tables

RPRxx-xx24S (all types)

Trim up	1	2	3	4	5	6	7	8	9	10	%
Vout =	24,24	24,48	24,72	24,96	25,20	25,44	24,68	25,92	26,16	26,4	Volts
R_U =	270	120	70	45.2	30.1	19.8	12.8	7.52	3.31	0	KOhms
Trim down	1	2	3	4	5	6	7	8	9	10	%
Vout =	23,76	23,52	23,28	23,04	22,80	22,56	22,32	22,08	21,84	21,6	Volts
R_D =	270	120	70	45.2	30.1	19.8	12.8	7.52	3.31	0	KOhms

Block Diagrams

Single Output - 3.3V and 5V Outputs

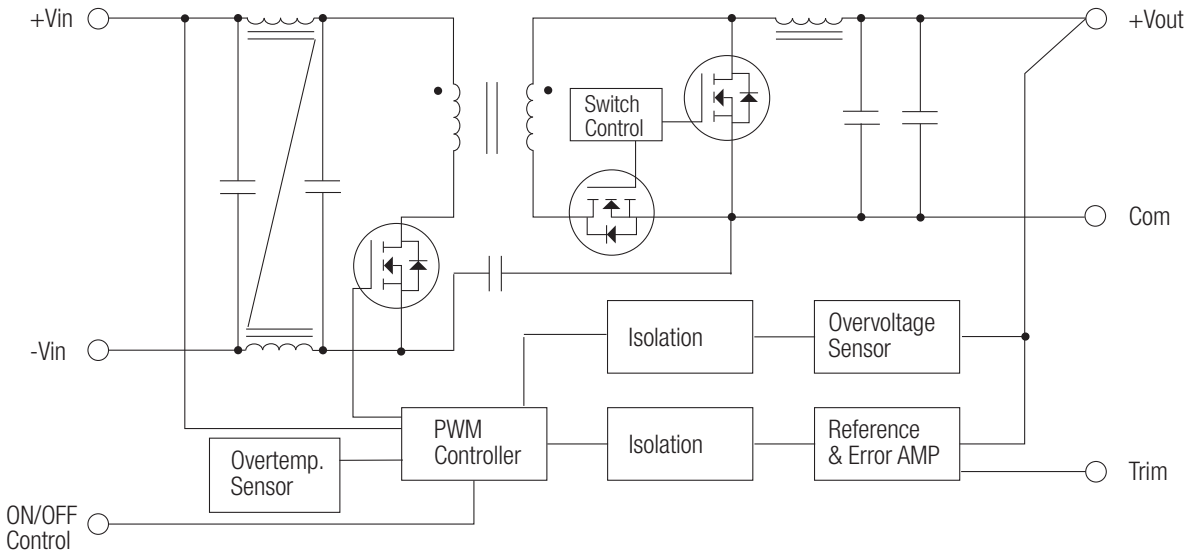

Single Output - all other outputs

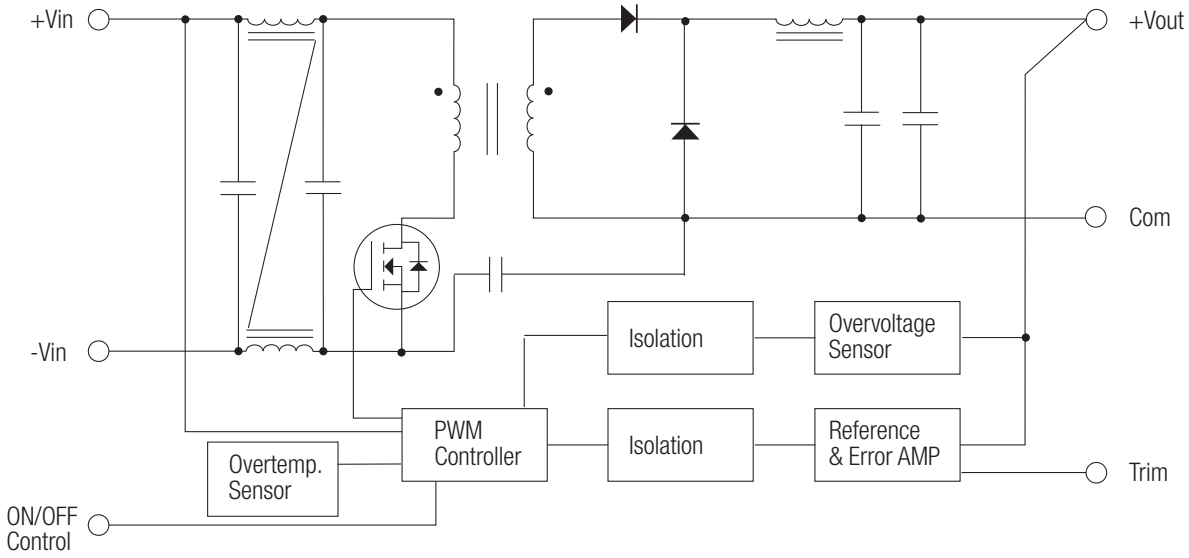

App Notes

Block Diagrams

Dual Output

