Features

Regulated Converters

- DIP16, Mini DIP16 or SMD package style
- 1kVDC, 2kVDC or 3kVDC isolation
- Continuous short circuit protected
- Low ripple and noise
- IEC/EN60950-1 certified
- Efficiency up to 83%

RECOM
DC/DC Converter

RW2

2 Watt MINI DIP16, DIP16 or SMD Single & Dual Output



IEC/EN60950-1 certified

Description

High power-density, 2:1 input voltage range and a wide temperature range of -40°C to +85°C are just some of the characteristics of this versatile DIP16 converter, ideal for highly sophisticated industrial designs where a regulated converter is required but space is at a premium. Three different case styles and isolation options are available.

Selection Guide

Part Number	Input Voltage Range [VDC]	Output Voltage [VDC]	Output Current [mA]	Efficiency typ.(1) [%]	max. Capacitive Load (2) [µF]
RW2-053.3S	4.5-9	3.3	500	68	4700
RW2-0505S	4.5-9	5	400	73	1000
RW2-0512S	4.5-9	12	166	75	1000
RW2-0515S	4.5-9	15	134	75	1000
RW2-123.3S	9-18	3.3	500	69	4700
RW2-1205S	9-18	5	400	75	1000
RW2-1212S	9-18	12	166	80	1000
RW2-1215S	9-18	15	134	80	1000
RW2-243.3S	18-36	3.3	500	70	4700
RW2-2405S	18-36	5	400	78	1000
RW2-2412S	18-36	12	166	83	1000
RW2-2415S	18-36	15	134	83	1000
RW2-483.3S	36-72	3.3	500	73	4700
RW2-4805S	36-72	5	400	76	1000
RW2-4812S	36-72	12	166	81	1000
RW2-4815S	36-72	15	134	81	1000
RW2-0505D	4.5-9	±5	±200	73	±680
RW2-0509D	4.5-9	±9	±111	74	±680
RW2-0512D	4.5-9	±12	±83	75	±680
RW2-0515D	4.5-9	±15	±67	75	±680
RW2-1205D	9-18	±5	±200	75	±680
RW2-1209D	9-18	±9	±111	78	±680
RW2-1212D	9-18	±12	±83	80	±680
RW2-1215D	9-18	±15	±67	80	±680
RW2-2405D	18-36	±5	±200	78	±680
RW2-2409D	18-36	±9	±111	81	±680
RW2-2412D	18-36	±12	±83	83	±680
RW2-2415D	18-36	±15	±67	83	±680
RW2-4805D	36-72	±5	±200	78	±680
RW2-4809D	36-72	±9	±111	81	±680
RW2-4812D	36-72	±12	±83	83	±680
RW2-4815D	36-72	±15	±67	83	±680

Notes:

Note1: Efficiency is tested at nominal input and full load at +25°C ambient

Note2: Maximum capacitive load is defined as the capacitive load that will allow start up in under 1 second without damage on the converter

Model Numbering

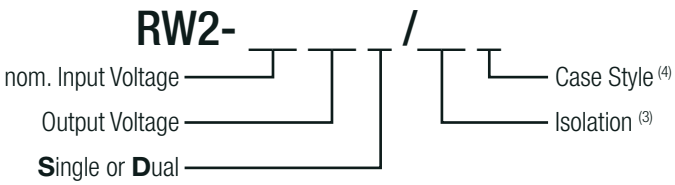

Notes:

Note3: „**/H2**“ = 2kVDC isolation; „**/H3**“ = 3kVDC isolation; without suffix standard 1kVDC isolation

Note4: add suffix „**/SMD**“ for SMD package or „**/B**“ for Mini DIP16 THT package; without suffix = standard DIP16 package (refer to “DIP16”)

Ordering Examples:

RW2-2405S/B:	18-36Vin	5Vout	Single	1kVDC Isolation	Mini DIP16 Package
RW2-1212D/H2:	9-18Vin	±12Vout	Dual	2kVDC Isolation	DIP16 Package
RW2-0515D/H3/SMD:	4.5-9Vin	±15Vout	Dual	3kVDC Isolation	SMD Package
RW2-4812S/H2/B	36-72Vin	12Vout	Single	2kVDC Isolation	Mini DIP16 Package

Specifications (measured @ Ta= 25°C, nom. Vin, full load and after warm-up unless otherwise stated)

BASIC CHARACTERISTICS

Parameter	Condition	Min.	Typ.	Max.
Input Voltage Range	nom. Vin= 5VDC	4.5VDC		9VDC
	12VDC	9VDC		18VDC
	24VDC	18VDC		36VDC
	48VDC	36VDC		72VDC
Minimum Load (5)		10%		
Internal Operating Frequency		100KHz		700kHz
Output Ripple and Noise	20MHz BW			50mVp-p

Notes:

Note5: Operation below 10% load won‘t harm the converter, but specifications may not be met.

REGULATIONS

Parameter	Condition	Value
Output Accuracy		±2.0% typ.
Line Regulation		±0.5% max.
Load Regulation	20% to 100% load	0.5% typ.

PROTECTION

Parameter	Type		Value
Short Circuit Protection (SCP)			continous
Isolation Voltage (6)	standard without suffix	tested for 1 second rated for 1 minute	1kVDC 500VAC/60Hz
	/H2 version	tested for 1 second rated for 1 minute	2kVDC 1kVAC/60Hz
	/H3 version	tested for 1 second rated for 1 minute	3kVDC 1.5kVAC/60Hz
Isolation Resistance			1GΩ min.
Isolation Capacitance			30pF max.
Insulation Grade			functional

Notes:

Note6: For repeat Hi-Pot testing, reduce the time and/or the test voltage

Note7: Refer to local safety regulations if input over-current protection is also required. Recommended fuse: slow blow type

Specifications (measured @ Ta= 25°C, nom. Vin, full load and after warm-up unless otherwise stated)

ENVIRONMENTAL

Parameter	Condition		Value
Operating Temperature Range	full load @ free air convection (see graph)		-40°C to +85°C
Maximum Case Temperature			+100°C
Operating Altitude			2000m
Operating Humidity	non-condensing		95% RH max.
Pollution Degree			PD2
MTBF	according to MIL-HDBK-217F, G.B.	+25°C +85°C	4366 x 10^3 hours 658 x 10^3 hours

Derating Graph
(@ Chamber and free air convection)

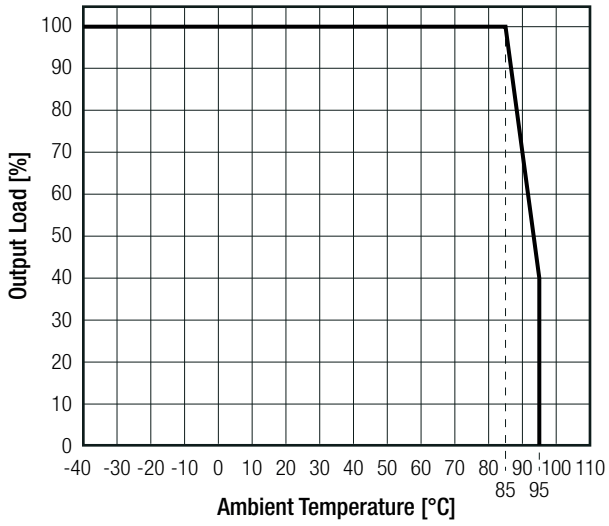

SAFETY AND CERTIFICATIONS

Certificate Type (Safety)	Report / File Number	Standard
Information Technology Equipment, General Requirements for Safety	SPCLVD1605077-10	IEC60950-1:2005, 2nd Edition + A2:2013 EN60950-1:2006 + A2:2013
Medical Electric Equipment, General Requirements for Safety and Essential Performance	WD-SE-R-180675-A0	IEC60601-1:2005, 3rd Edition + A1:2012 EN60601-1:2006 + A12:2014
EAC	RU-AT.AB49.B.09571	TP TC 004/2011
RoHS2+	TWNC00635328	RoHS-2011/65/EU

EMC Compliance	Condition	Standard / Criterion
Electromagnetic compatibility of multimedia equipment - Emission requirements (8)	with external filter (see filter suggestion below)	EN55032, Class A EN55032, Class B

EMC Filtering Suggestions according to EN55032

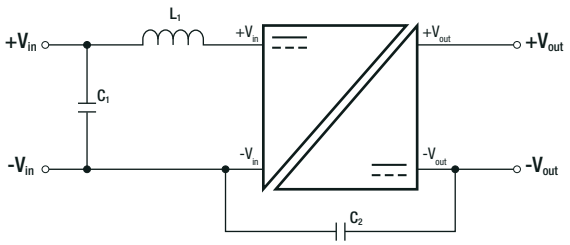

Component List Class A

Models	C1	C2	L1
RW2-1212S/H2/SMD RW2-2405S/H2	10µF/100V MLCC	330pF	5.6µH choke RLS-567

Component List Class B

Models	C1	C2	L1
RW2-1212S/H2/SMD RW2-2405S/H2	10µF/100V MLCC	330pF	22µH choke RLS-226

Notes:

Note8: Filter suggestions are valid for indicated part numbers only.
For other part numbers, please contact RECOM tech support for advice.

Specifications (measured @ Ta= 25°C, nom. Vin, full load and after warm-up unless otherwise stated)

DIMENSION AND PHYSICAL CHARACTERISTICS

Parameter	Type	Value
Material	case potting PCB	non-conductive black plastic, (UL94 V-0) epoxy, (UL94 V-0) FR4, (UL94 V-0)
Dimension (LxWxH)	Mini DIP16 DIP16 SMD	22.1 x 12.55 x 8.50mm 24.2 x 14.50 x 9.70mm 24.2 x 14.50 x 10.20mm
Weight		6.4g typ.

Dimension Drawing (mm)

DIP16

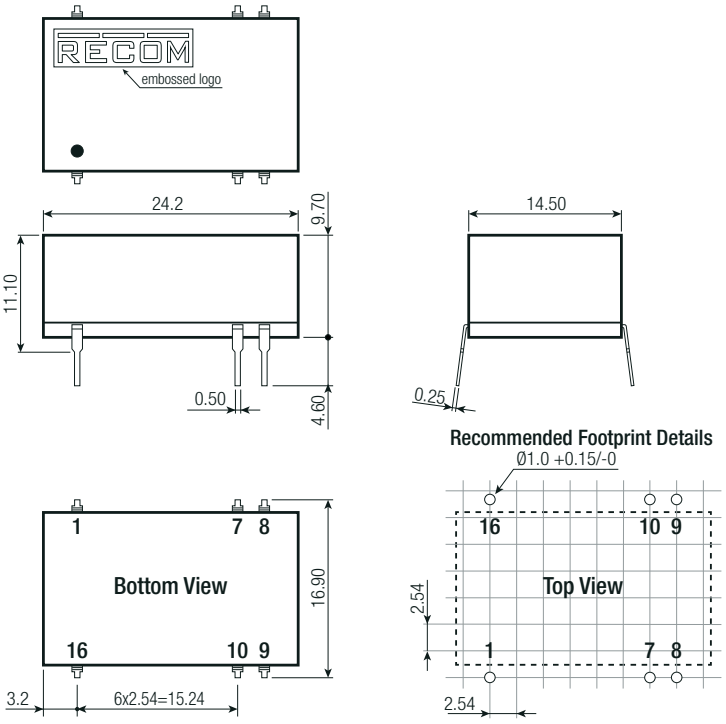

Pinning information

Pin #	Single	Dual
1	-Vin	-Vin
7	NC	NC
8	NC	Com
9	+Vout	+Vout
10	-Vout	-Vout
16	+Vin	+Vin

Tolerance: xx.x= ±0.5mm
xx.xx= ±0.35mm

Mini DIP16 (/B)

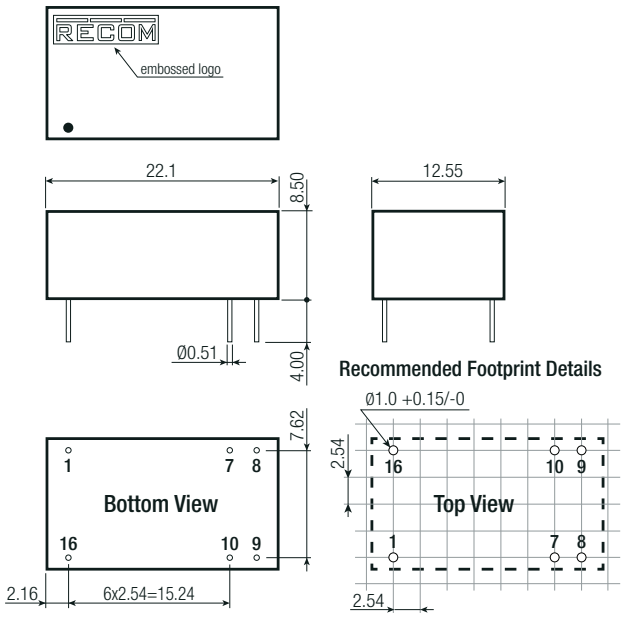

Pinning information

Pin #	Single	Dual
1	-Vin	-Vin
7	NC	NC
8	NC	Com
9	+Vout	+Vout
10	-Vout	-Vout
16	+Vin	+Vin

Tolerance: xx.x= ±0.5mm
xx.xx= ±0.35mm

continued on next page

Specifications (measured @ Ta= 25°C, nom. Vin, full load and after warm-up unless otherwise stated)

Dimension Drawing SMD (mm)

SMD (/SMD)

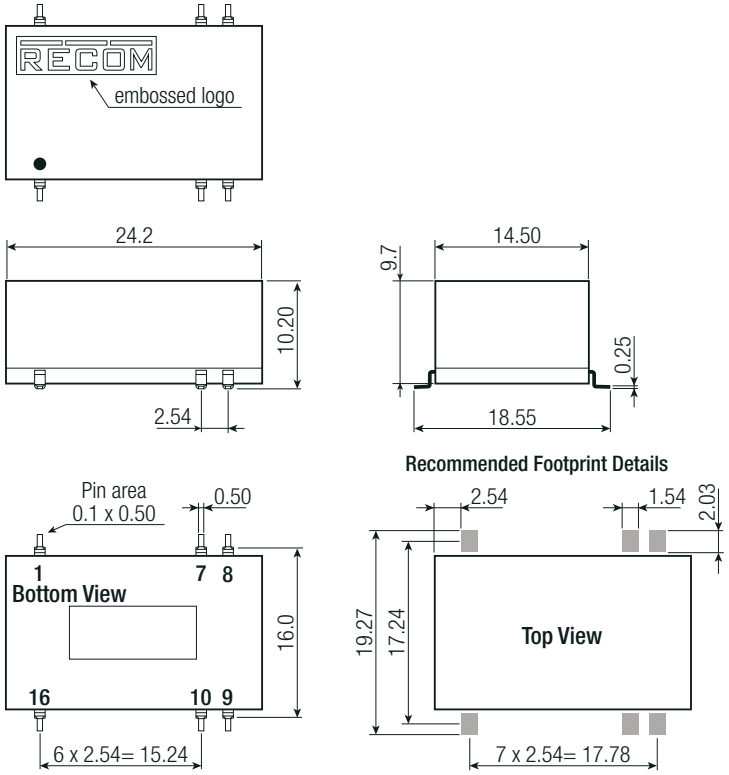

Pinning information

Pin #	Single	Dual
1	-Vin	-Vin
7	NC	NC
8	NC	Com
9	+Vout	+Vout
10	-Vout	-Vout
16	+Vin	+Vin

Tolerance: xx.x=±0.5mm
xx.xx=±0.35mm

PACKAGING INFORMATION		
Parameter	**Type**	**Value**
Packaging Dimension (LxWxH)	tube	530.0 x 21.0 x 18.0mm
Packaging Quantity	DIP16 and SMD Mini DIP16	20pcs 22pcs
Storage Temperature Range		-55°C to +125°C
Storage Humidity	non-condensing	95% RH max.

The product information and specifications may be subject to changes even without prior written notice.The product has been designed for various applications; its suitability lies in the responsibility of each customer. The products are not authorized for use in safety-critical applications without RECOM's explicit written consent. A safety-critical application is an application where a failure may reasonably be expected to endanger or cause loss of life, inflict bodily harm or damage property. The applicant shall indemnify and hold harmless RECOM, its affiliated companies and its representatives against any damage claims in connection with the unauthorized use of RECOM products in such safety-critical applications.