User's Manual

RZ/G2L, RZ/V2L SMARC Module Board

User's Manual: Hardware

Renesas Microprocessor
RZ Family / RZ/G, RZ/V Series

RTK9744L23C01000BE
RTK9754L23C01000BE

All information contained in these materials, including products and product specifications, represents information on the product at the time of publication and is subject to change by Renesas Electronics Corp. without notice. Please review the latest information published by Renesas Electronics Corp. through various means, including the Renesas Electronics Corp. website (http://www.renesas.com).

Renesas Electronics
www.renesas.com

Rev.1.20 Apr, 2024

Notice

1. Descriptions of circuits, software and other related information in this document are provided only to illustrate the operation of semiconductor products and application examples. You are fully responsible for the incorporation or any other use of the circuits, software, and information in the design of your product or system. Renesas Electronics disclaims any and all liability for any losses and damages incurred by you or third parties arising from the use of these circuits, software, or information.
2. Renesas Electronics hereby expressly disclaims any warranties against and liability for infringement or any other claims involving patents, copyrights, or other intellectual property rights of third parties, by or arising from the use of Renesas Electronics products or technical information described in this document, including but not limited to, the product data, drawings, charts, programs, algorithms, and application examples.
3. No license, express, implied or otherwise, is granted hereby under any patents, copyrights or other intellectual property rights of Renesas Electronics or others.
4. You shall be responsible for determining what licenses are required from any third parties, and obtaining such licenses for the lawful import, export, manufacture, sales, utilization, distribution or other disposal of any products incorporating Renesas Electronics products, if required.
5. You shall not alter, modify, copy, or reverse engineer any Renesas Electronics product, whether in whole or in part. Renesas Electronics disclaims any and all liability for any losses or damages incurred by you or third parties arising from such alteration, modification, copying or reverse engineering.
6. Renesas Electronics products are classified according to the following two quality grades: “Standard” and “High Quality”. The intended applications for each Renesas Electronics product depends on the product’s quality grade, as indicated below.
   "Standard": Computers; office equipment; communications equipment; test and measurement equipment; audio and visual equipment; home electronic appliances; machine tools; personal electronic equipment; industrial robots; etc.
   "High Quality": Transportation equipment (automobiles, trains, ships, etc.); traffic control (traffic lights); large-scale communication equipment; key financial terminal systems; safety control equipment; etc.

   Unless expressly designated as a high reliability product or a product for harsh environments in a Renesas Electronics data sheet or other Renesas Electronics document, Renesas Electronics products are not intended or authorized for use in products or systems that may pose a direct threat to human life or bodily injury (artificial life support devices or systems; surgical implantations; etc.), or may cause serious property damage (space system; undersea repeaters; nuclear power control systems; aircraft control systems; key plant systems; military equipment; etc.). Renesas Electronics disclaims any and all liability for any damages or losses incurred by you or any third parties arising from the use of any Renesas Electronics product that is inconsistent with any Renesas Electronics data sheet, user’s manual or other Renesas Electronics document.
7. No semiconductor product is absolutely secure. Notwithstanding any security measures or features that may be implemented in Renesas Electronics hardware or software products, Renesas Electronics shall have absolutely no liability arising out of any vulnerability or security breach, including but not limited to any unauthorized access to or use of a Renesas Electronics product or a system that uses a Renesas Electronics product. RENESAS ELECTRONICS DOES NOT WARRANT OR GUARANTEE THAT RENESAS ELECTRONICS PRODUCTS, OR ANY SYSTEMS CREATED USING RENESAS ELECTRONICS PRODUCTS WILL BE INVULNERABLE OR FREE FROM CORRUPTION, ATTACK, VIRUSES, INTERFERENCE, HACKING, DATA LOSS OR THEFT, OR OTHER SECURITY INTRUSION (“Vulnerability Issues”). RENESAS ELECTRONICS DISCLAIMS ANY AND ALL RESPONSIBILITY OR LIABILITY ARISING FROM OR RELATED TO ANY VULNERABILITY ISSUES. FURTHERMORE, TO THE EXTENT PERMITTED BY APPLICABLE LAW, RENESAS ELECTRONICS DISCLAIMS ANY AND ALL WARRANTIES, EXPRESS OR IMPLIED, WITH RESPECT TO THIS DOCUMENT AND ANY RELATED OR ACCOMPANYING SOFTWARE OR HARDWARE, INCLUDING BUT NOT LIMITED TO THE IMPLIED WARRANTIES OF MERCHANTABILITY, OR FITNESS FOR A PARTICULAR PURPOSE.
8. When using Renesas Electronics products, refer to the latest product information (data sheets, user’s manuals, application notes, “General Notes for Handling and Using Semiconductor Devices” in the reliability handbook, etc.), and ensure that usage conditions are within the ranges specified by Renesas Electronics with respect to maximum ratings, operating power supply voltage range, heat dissipation characteristics, installation, etc. Renesas Electronics disclaims any and all liability for any malfunctions, failure or accident arising out of the use of Renesas Electronics products outside of such specified ranges.
9. Although Renesas Electronics endeavors to improve the quality and reliability of Renesas Electronics products, semiconductor products have specific characteristics, such as the occurrence of failure at a certain rate and malfunctions under certain use conditions. Unless designated as a high reliability product or a product for harsh environments in a Renesas Electronics data sheet or other Renesas Electronics document, Renesas Electronics products are not subject to radiation resistance design. You are responsible for implementing safety measures to guard against the possibility of bodily injury, injury or damage caused by fire, and/or danger to the public in the event of a failure or malfunction of Renesas Electronics products, such as safety design for hardware and software, including but not limited to redundancy, fire control and malfunction prevention, appropriate treatment for aging degradation or any other appropriate measures. Because the evaluation of microcomputer software alone is very difficult and impractical, you are responsible for evaluating the safety of the final products or systems manufactured by you.
10. Please contact a Renesas Electronics sales office for details as to environmental matters such as the environmental compatibility of each Renesas Electronics product. You are responsible for carefully and sufficiently investigating applicable laws and regulations that regulate the inclusion or use of controlled substances, including without limitation, the EU RoHS Directive, and using Renesas Electronics products in compliance with all these applicable laws and regulations. Renesas Electronics disclaims any and all liability for damages or losses occurring as a result of your noncompliance with applicable laws and regulations.
11. Renesas Electronics products and technologies shall not be used for or incorporated into any products or systems whose manufacture, use, or sale is prohibited under any applicable domestic or foreign laws or regulations. You shall comply with any applicable export control laws and regulations promulgated and administered by the governments of any countries asserting jurisdiction over the parties or transactions.
12. It is the responsibility of the buyer or distributor of Renesas Electronics products, or any other party who distributes, disposes of, or otherwise sells or transfers the product to a third party, to notify such third party in advance of the contents and conditions set forth in this document.
13. This document shall not be reprinted, reproduced or duplicated in any form, in whole or in part, without prior written consent of Renesas Electronics.
14. Please contact a Renesas Electronics sales office if you have any questions regarding the information contained in this document or Renesas Electronics products.

(Note1) “Renesas Electronics” as used in this document means Renesas Electronics Corporation and also includes its directly or indirectly controlled subsidiaries.

(Note2) “Renesas Electronics product(s)” means any product developed or manufactured by or for Renesas Electronics.

(Rev.5.0-1 October 2020)

Corporate Headquarters

TOYOSU FORESIA, 3-2-24 Toyosu,
Koto-ku, Tokyo 135-0061, Japan

www.renesas.com

Contact information

For further information on a product, technology, the most up-to-date version of a document, or your nearest sales office, please visit:

www.renesas.com/contact/

Trademarks

Renesas and the Renesas logo are trademarks of Renesas Electronics Corporation. All trademarks and registered trademarks are the property of their respective owners.

© 2024 Renesas Electronics Corporation. All rights reserved.

Trademarks (continued)

For the “Cortex” notation, it is used as follows;
— Arm® Cortex®-A55
— Arm® Cortex®-M33
Note that after this page, they may be noted as Cortex-A55 and Cortex-M33 respectively.

Examples of trademark or registered trademark used in the RZ/G2L SMARC Module Board RTK9744L23C01000BE User’s Manual: Hardware;
CoreSight™: CoreSight is a trademark of Arm Limited.
MIPI®: MIPI is a registered trademark of MIPI Alliance, Inc.
eMMC™: eMMC is a trademark of MultiMediaCard Association.

Note that in each section of the Manual, trademark notation of ® and TM may be omitted.
All other trademarks and registered trademarks are the property of their respective owners.

© 2024 Renesas Electronics Corporation. All rights reserved.

General Precautions in the Handling of Microprocessing Unit and Microcontroller Unit Products

The following usage notes are applicable to all Microprocessing unit and Microcontroller unit products from Renesas. For detailed usage notes on the products covered by this document, refer to the relevant sections of the document as well as any technical updates that have been issued for the products.

1. Precaution against Electrostatic Discharge (ESD)
   A strong electrical field, when exposed to a CMOS device, can cause destruction of the gate oxide and ultimately degrade the device operation. Steps must be taken to stop the generation of static electricity as much as possible, and quickly dissipate it when it occurs. Environmental control must be adequate. When it is dry, a humidifier should be used. This is recommended to avoid using insulators that can easily build up static electricity. Semiconductor devices must be stored and transported in an anti-static container, static shielding bag or conductive material. All test and measurement tools including work benches and floors must be grounded. The operator must also be grounded using a wrist strap. Semiconductor devices must not be touched with bare hands. Similar precautions must be taken for printed circuit boards with mounted semiconductor devices.
2. Processing at power-on
   The state of the product is undefined at the time when power is supplied. The states of internal circuits in the LSI are indeterminate and the states of register settings and pins are undefined at the time when power is supplied. In a finished product where the reset signal is applied to the external reset pin, the states of pins are not guaranteed from the time when power is supplied until the reset process is completed. In a similar way, the states of pins in a product that is reset by an on-chip power-on reset function are not guaranteed from the time when power is supplied until the power reaches the level at which resetting is specified.
3. Input of signal during power-off state
   Do not input signals or an I/O pull-up power supply while the device is powered off. The current injection that results from input of such a signal or I/O pull-up power supply may cause malfunction and the abnormal current that passes in the device at this time may cause degradation of internal elements. Follow the guideline for input signal during power-off state as described in your product documentation.
4. Handling of unused pins
   Handle unused pins in accordance with the directions given under handling of unused pins in the manual. The input pins of CMOS products are generally in the high-impedance state. In operation with an unused pin in the open-circuit state, extra electromagnetic noise is induced in the vicinity of the LSI, an associated shoot-through current flows internally, and malfunctions occur due to the false recognition of the pin state as an input signal become possible.
5. Clock signals
   After applying a reset, only release the reset line after the operating clock signal becomes stable. When switching the clock signal during program execution, wait until the target clock signal is stabilized. When the clock signal is generated with an external resonator or from an external oscillator during a reset, ensure that the reset line is only released after full stabilization of the clock signal. Additionally, when switching to a clock signal produced with an external resonator or by an external oscillator while program execution is in progress, wait until the target clock signal is stable.
6. Voltage application waveform at input pin
   Waveform distortion due to input noise or a reflected wave may cause malfunction. If the input of the CMOS device stays in the area between V_{IL} (Max.) and V_{IH} (Min.) due to noise, for example, the device may malfunction. Take care to prevent chattering noise from entering the device when the input level is fixed, and also in the transition period when the input level passes through the area between V_{IL} (Max.) and V_{IH} (Min.).
7. Prohibition of access to reserved addresses
   Access to reserved addresses is prohibited. The reserved addresses are provided for possible future expansion of functions. Do not access these addresses as the correct operation of the LSI is not guaranteed.
8. Differences between products
   Before changing from one product to another, for example to a product with a different part number, confirm that the change will not lead to problems. The characteristics of a microprocessing unit or microcontroller unit products in the same group but having a different part number might differ in terms of internal memory capacity, layout pattern, and other factors, which can affect the ranges of electrical characteristics, such as characteristic values, operating margins, immunity to noise, and amount of radiated noise. When changing to a product with a different part number, implement a system-evaluation test for the given product.

Table of Contents

1. Overview 7
1.1 Overview 7
1.2 Configuration 8
1.3 Features 9
1.4 Physical View 10
1.5 Block Diagram 12
1.6 Component Layout 13
1.7 Absolute Maximum Ratings 16
1.8 Operating Condition 16

2. Functional Specifications 17
2.1 Overview of Functions 17
2.2 MPU 18
2.2.1 Overview of RZ/G2L 18
2.2.2 List of Pin Functions 18
2.3 Memory 35
2.3.1 QSPI Flash Memory 35
2.3.2 DDR4 SDRAM 36
2.4 Gigabit Ethernet Interface 37
2.5 ADC Interface 38
2.6 Clock Configuration 39
2.7 Reset Control 40
2.8 Power Supply Configuration 41
2.9 PMIC 43
2.10 Debug Interface 44
2.11 SD/MMC Host Interface 45
2.11.1 eMMC Memory 45
2.11.2 SD Card 46

3. Operation Specifications 47
3.1 Overview of Connectors 47
3.1.1 ADC Connector (CN1) 48
3.1.2 JTAG Connector (CN2) 49
3.1.3 MicroSD Card Slot (CN3) 50
3.1.4 SMARC edge Connector (CN4) 51
3.2 Layout of Operation Components 52
3.2.1 Functions of Switches and Mode Terminals 53

4. Appendix 55
4.1 Type Name and Features of Each Board 55
4.2 How to Identify Each SMARC Module Board 57
4.3 How to replace the SMARC Module Board 58
REVISION HISTORY 60

1. Overview

1.1 Overview

To begin with, only RZ/G2L SMARC Module Board will be explained here.

The difference between RZ/G2L SMARC Module Board (RTK9744L23C01000BE) and RZ/V2L SMARC Module Board (RTK9754L23C01000BE) is that RTK9754L23C01000BE uses Renesas Electronics microprocessor RZ/V2L "R9A07G054L23GBG", which is pin-compatible with RZ/G2L. In other words, they are functionally the same.

This document describes the specification of RTK9744L23C01000BE to evaluate the functions and performance of the Renesas Electronics microprocessor RZ/G2L "R9A07G044L23GBG" and evaluate application software programs.

The RTK9744L23C01000BE complies with the SMARC v2.1 and has following features.

- It is mounted with the following external memories.

  DDR4 SDRAM: 2GB × 1pc

  QSPI flash memory: 512Mb × 1pc

  eMMC memory: 64GB × 1pc
- The microSD card slot is implemented and used as an eSD for boot.
- It is implemented a 5-output clock generator "5P35023".
- It is implemented a PMIC "RAA215300" as power supply circuit.
- The Ethernet PHY is implemented as standard and can send/receive data at 10/100/1000Mbps.
- Terminals not used on this board are connected to the 314-pin 0.5-mm pitch connector, which can be used in conjunction with a Carrier Board. It also allows for the development of the Carrier Board that meet the needs of development.
- The 10-pin pin header for ARM Cortex Debug is implemented for connection to debug interface.
- The 10-pin pin header is implemented for connection to ADC interface.

1.2 Configuration

Figure 1.1 shows an example of system configuration using RTK9744L23C01000BE.

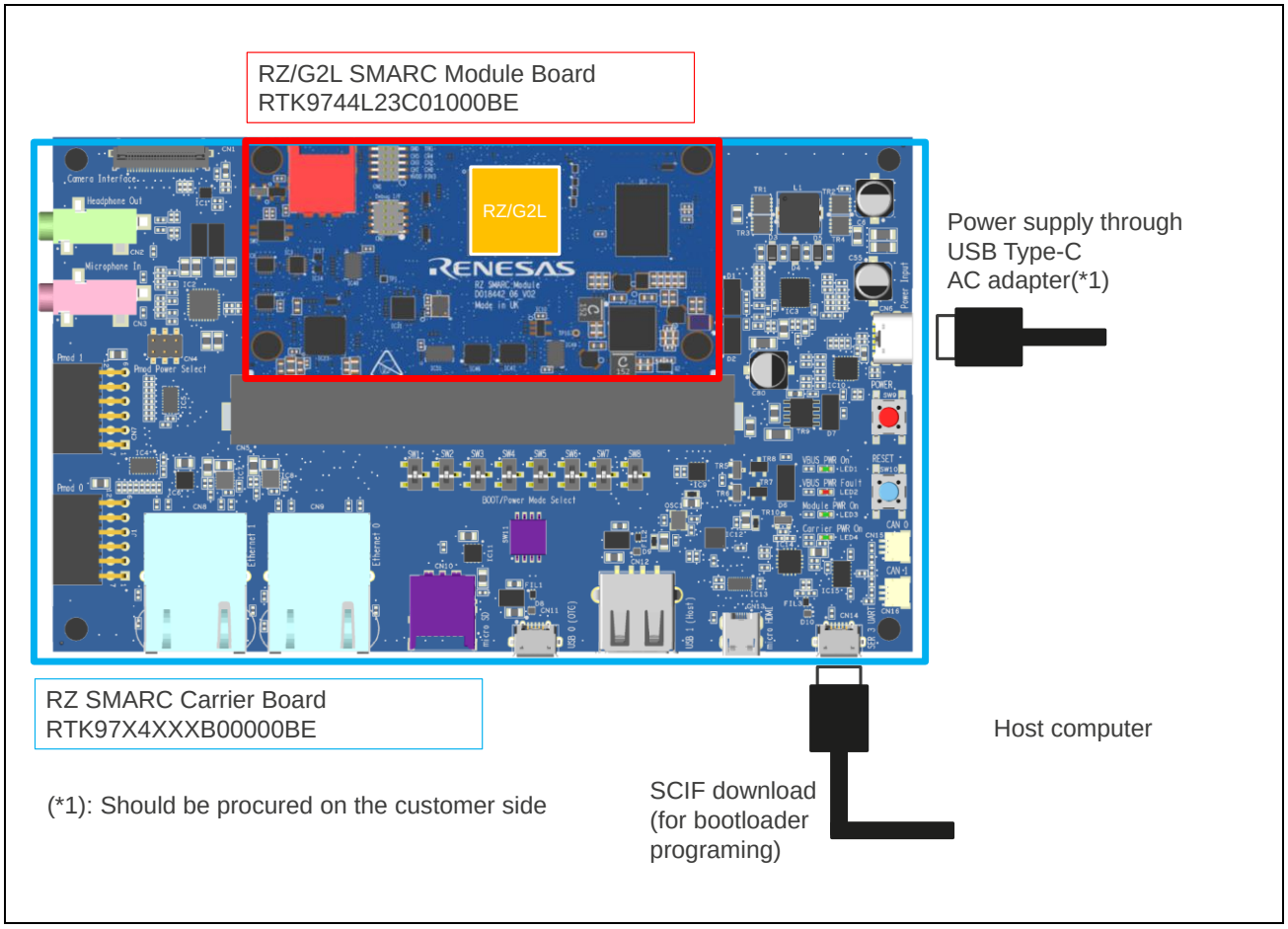

Figure 1.1 Example of System Configuration Using RTK9744L23C01000BE

1.3 Features

Table 1.1 shows the features of the RTK9744L23C01000BE.

Table 1.1 Features of the RTK9744L23C01000BE

Item	Details
CPU	RZ/G2L Input (Xin) clock: 24MHz Arm Cortex-A55 clock: 1.2GHz Arm Cortex-M33 clock: 200MHz AXI-bus clock: 200MHz APB-bus clock: 100MHz Internal memory Instruction cache: 32KB Data cache: 32KB Power voltage: 1.1V, I/O: 3.3V 456-Pin PBGA 0.5-mm pitch
Memory	QSPI flash memory: 512Mbit * 1pc DDR4 SDRAM: 2GB * 1pc eMMC memory: 64GB * 1pc
Clock IC	Clock generator: 1pc
Ethernet IC	Ethernet PHY: 2pcs
Connector	microSD card slot (4 bits): 1pc 10-pin pin header for JTAG: 1pc 10-pin pin header for ADC: 1pc SMARC edge connector (314 pins): 1pc
Switch	System setting DIP switch: 2 bits
Circuit board specifications	Dimensions: 82 mm * 50 mm Mount: Double-sided mounting (6 layers)

1.4 Physical View

Figure 1.2 and **Figure 1.3** show the top and bottom views of the RTK9744L23C01000BE.



Figure 1.2 Top View of the RTK9744L23C01000BE



Figure 1.3 Bottom View of the RTK9744L23C01000BE

1.5 Block Diagram

Figure 1.4 shows the block diagram of the RTK9744L23C01000BE.

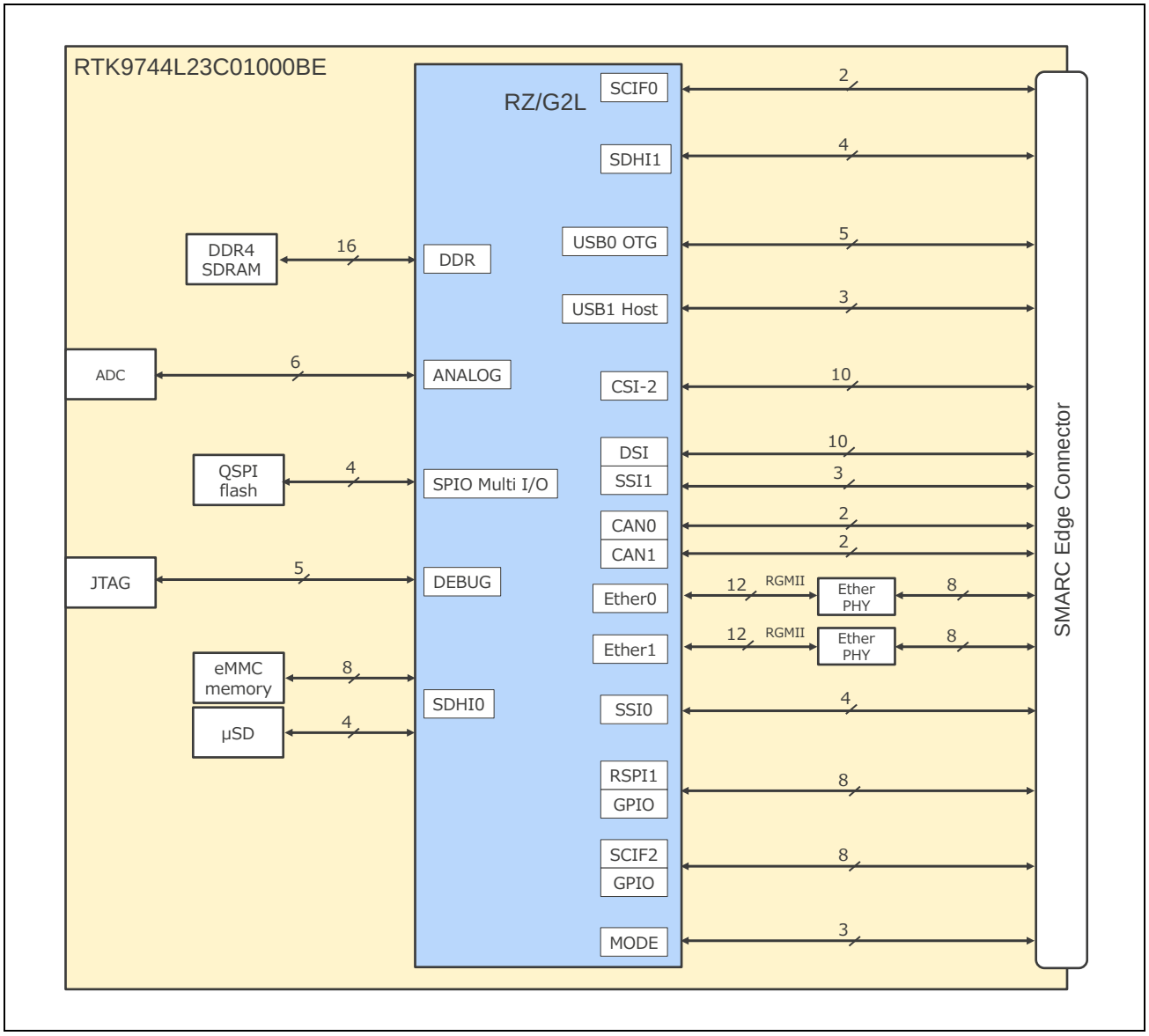

Figure 1.4 Block Diagram of the RTK9744L23C01000BE

1.6 Component Layout

Figure 1.5 and **Figure 1.6** show the layout of main components of the RTK9744L23C01000BE.

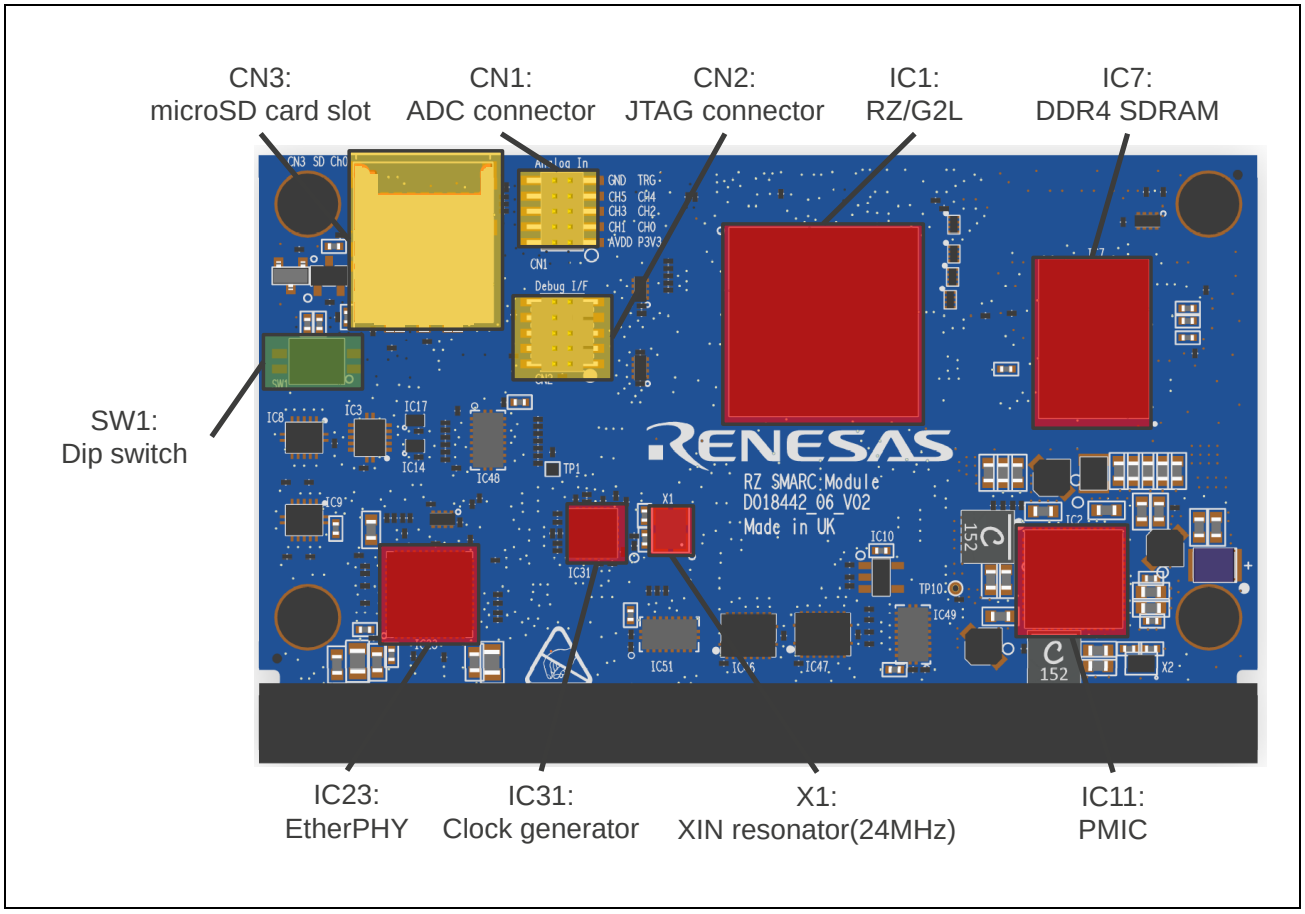

Figure 1.5 Layout of Components of the RTK9744L23C01000BE (Top View)

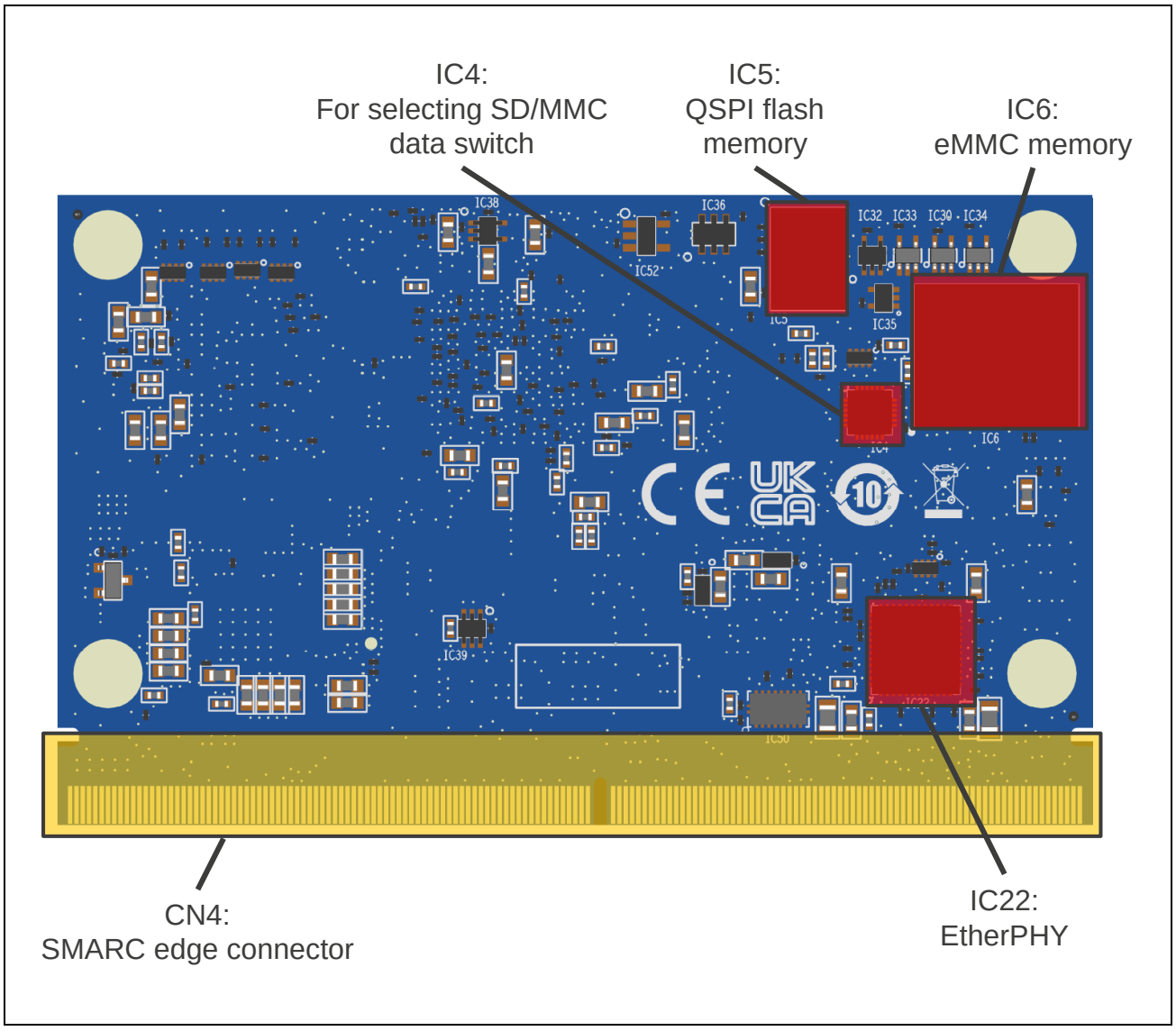

Figure 1.6 Layout of Components of the RTK9744L23C01000BE (Bottom View)

Table 1.2 and **Table 1.3** list main components mounted on the RTK9744L23C01000BE.

Table 1.2 Main Components on the RTK9744L23C01000BE (1) IC

Component Number	Component Name	Type (Manufacturer)
IC1	MPU	R9A07G044L23GBG (Renesas Electronics)
IC2	PMIC	RAA215300A2GNP#HA0 (Renesas Electronics)
IC4	Data switch IC	MAX4996LETG+ (MAXIM)
IC5	QSPI flash memory	MT25QU512ABB8E12-0SIT (Micron)
IC6	eMMC memory	MTFC64GASAQHD-IT (Micron)
IC7	DDR4 SDRAM	MT40A1G16KD-062E:E (Micron)
IC22	Ethernet PHY	KSZ9131RNXC (Microchip)
IC23	Ethernet PHY	KSZ9131RNXC (Microchip)
IC31	Clock generator	5P35023B-629NLGI (Renesas Electronics)
X1	Crystal resonator for XIN	FL2400022 (Diodes Inc)

Table 1.3 Main Components on the RTK9744L23C01000BE (2) Connector

Components Number	Component Name	Type (Manufacturer)
CN1	ADC connector (10pin)	FTSH-105-01-L-DV (Samtec)
CN2	JTAG connector (10pin)	FTSH-105-01-F-DV-007-K (Samtec)
CN3	microSD card slot	504077-1891 (Molex)
CN4	SMARC edge connector (314pin)	

1.7 Absolute Maximum Ratings

Table 1.4 lists absolute maximum ratings of the RTK9744L23C01000BE.

Table 1.4 Absolute Maximum Ratings of the RTK9744L23C01000BE

Symbol	Item	Rated Value	Note
VDD_IN	power voltage	5.25V	Reference: Vss
—	Maximum power consumption	3A	Includes continuous RZ SMARC Series Carrier Board current consumption
Topr	Operating ambient temperature*1	0°C to 50°C	Do not expose to condensation or corrosive gases
Tstg	Storage temperature*1	-10°C to 60°C	Do not expose to condensation or corrosive gases

Note 1. Ambient temperature is the air temperature at a position as close to the board as possible.

1.8 Operating Condition

Table 1.5 lists operating conditions of the RTK9744L23C01000BE.

Table 1.5 Operating Conditions of the RTK9744L23C01000BE

Symbol	Item	Rated Value	Note
VDD_IN	Power volotage	3.0V to 5.25V	Reference: Smarc v2.1 specification
Topr	Operating ambient temperature*1	0°C to 40°C	Do not expose to condensation or corrosive gases

Note 1. Ambient temperature is the air temperature at a position as close to the board as possible.

2. Functional Specifications

2.1 Overview of Functions

Table 2.1 lists function modules of the RTK9744L23C01000BE.

Table 2.1 Function Modules of the RTK9744L23C01000BE

Section	Function	Description
2.2	**MPU**	RZ/G2L Input (Xin) clock: 24MHz Arm Cortex-A55 clock: 1.2GHz Arm Cortex-M33 clock: 200MHz AXI-bus clock: 200MHz APB-bus clock: 100MHz
2.3	**Memory**	QSPI flash memory: 512Mbit * 1pc DDR4 SDRAM: 2GB * 1pc eMMC memory: 64GB * 1pc
2.4	**Gigabit Ethernet Interface**	Connection between the Ethernet controller (E-MAC) and LAN connector via Ethernet PHY
2.5	**ADC Interface**	Connection between ADC module and connector
2.6	**Clock Configuration**	System clock configuration
2.7	**Reset Control**	Reset control for RZ/G2L mounted on the RTK9744L23C01000BE.
2.8	**Power Supply Configuration**	System power supply configuration of the RTK9744L23C01000BE and RTK97X4XXXB00000BE
2.9	**PMIC**	Connection between RZ/G2L and PMIC
2.10	**Debug Interface**	Connection between Debug Interface and connector
2.11	**SD/MMC Host Interface**	Connection between SD/MMC Host Interface (SDHI) channel 0 and microSD card slot
—	Operating specification	Connectors and switches Details are described in Chapter 3

2.2 MPU

2.2.1 Overview of RZ/G2L

RTK9744L23C01000BE contains a 64-bit microprocessor RZ/G2L that runs in synchronization with the CPU clock (max.1.2 GHz).

2.2.2 List of Pin Functions

Table 2.2 lists pin functions used in RTK9744L23C01000BE.

Table 2.2 List of Pin Function Selection Used on the RTK9744L23C01000BE (1/17)

Pin Location	Pin Name	Pin Function	Description	SMARC Pin No.	SMARC Pin Name
G12	VDD18	VDD18	1.8V	—	—
B11	ABG_NCP_OUT	ABG_NCP_OUT	Connected to GND via the 1uF bypass capacitor (*1)	—	—
E22	ADC_AVDD18	ADC_AVDD18	1.8V	—	—
A28	ADC_CH0	ADC_CH0	Pin header CN1 for ADC input	—	—
B27	ADC_CH1	ADC_CH1	Pin header CN1 for ADC input	—	—
B28	ADC_CH2	ADC_CH2	Pin header CN1 for ADC input	—	—
A27	ADC_CH3	ADC_CH3	Pin header CN1 for ADC input	—	—
C26	ADC_CH4	ADC_CH4	Pin header CN1 for ADC input	—	—
B26	ADC_CH5	ADC_CH5	Pin header CN1 for ADC input	—	—
A26	ADC_CH6	ADC_CH6	Connected to GND (*1)	—	—
B25	ADC_CH7	ADC_CH7	Connected to GND (*1)	—	—
E12	AUDIO_CLK1	AUDIO_CLK1	Input 11.2896MHz from 5P35023 for generating the CD sampling rate (44.1kHz)	—	—
B8	AUDIO_CLK2	AUDIO_CLK2	Input 12.2880MHz from 5P35023 for generating the DVD sampling rate (48.0kHz)	—	—
AB23	BSCANP	BSCANP	Initial setting: 0 (Pull down), should be controllable by resistor.	—	—
AB24	VSS	VSS	GND	—	—
AG12	CSI_CLKN	CSI_CLKN	24-pin FFC connector on the carrier board	P4	CSI1_CLK-
AG13	CSI_CLKP	CSI_CLKP	24-pin FFC connector on the carrier board	P3	CSI1_CLK+
AH13	CSI_DATA0_N	CSI_DATA0_N	24-pin FFC connector on the carrier board	P8	CSI1_RX0-
AJ13	CSI_DATA0_P	CSI_DATA0_P	24-pin FFC connector on the carrier board	P7	CSI1_RX0+
AH12	CSI_DATA1_N	CSI_DATA1_N	24-pin FFC connector on the carrier board	P11	CSI1_RX1-
AJ12	CSI_DATA1_P	CSI_DATA1_P	24-pin FFC connector on the carrier board	P10	CSI1_RX1+
AH14	CSI_DATA2_N	CSI_DATA2_N	24-pin FFC connector on the carrier board	P14	CSI1_RX2-
AJ14	CSI_DATA2_P	CSI_DATA2_P	24-pin FFC connector on the carrier board	P13	CSI1_RX2+
AH11	CSI_DATA3_N	CSI_DATA3_N	24-pin FFC connector on the carrier board	P17	CSI1_RX3-
AJ11	CSI_DATA3_P	CSI_DATA3_P	24-pin FFC connector on the carrier board	P16	CSI1_RX3+

Table 2.2 List of Pin Function Selection Used on the RTK9744L23C01000BE (2/17)

Pin Location	Pin Name	Pin Function	Description	SMARC Pin No.	SMARC Pin Name
AD12	CSI_VDD18	CSI_VDD18	1.8V	—	—
AD13	CSI_VDD18	CSI_VDD18	1.8V	—	—
G29	DDR_ADDR0	DDR_ADDR0	DDR4 SDRAM (MT40A1G16KD-062E:E)	—	—
M27	DDR_ADDR1	DDR_ADDR1	DDR4 SDRAM (MT40A1G16KD-062E:E)	—	—
R29	DDR_ADDR10	DDR_ADDR10	DDR4 SDRAM (MT40A1G16KD-062E:E)	—	—
K28	DDR_ADDR11	DDR_ADDR11	DDR4 SDRAM (MT40A1G16KD-062E:E)	—	—
P29	DDR_ADDR12	DDR_ADDR12	DDR4 SDRAM (MT40A1G16KD-062E:E)	—	—
E29	DDR_ADDR13	DDR_ADDR13	DDR4 SDRAM (MT40A1G16KD-062E:E)	—	—
H29	DDR_ADDR14	DDR_ADDR14	DDR4 SDRAM (MT40A1G16KD-062E:E)	—	—
G27	DDR_ADDR15	DDR_ADDR15	DDR4 SDRAM (MT40A1G16KD-062E:E)	—	—
F28	DDR_ADDR2	DDR_ADDR2	DDR4 SDRAM (MT40A1G16KD-062E:E)	—	—
F29	DDR_ADDR3	DDR_ADDR3	DDR4 SDRAM (MT40A1G16KD-062E:E)	—	—
L29	DDR_ADDR4	DDR_ADDR4	DDR4 SDRAM (MT40A1G16KD-062E:E)	—	—
D29	DDR_ADDR5	DDR_ADDR5	DDR4 SDRAM (MT40A1G16KD-062E:E)	—	—
L28	DDR_ADDR6	DDR_ADDR6	DDR4 SDRAM (MT40A1G16KD-062E:E)	—	—
C28	DDR_ADDR7	DDR_ADDR7	DDR4 SDRAM (MT40A1G16KD-062E:E)	—	—
H28	DDR_ADDR8	DDR_ADDR8	DDR4 SDRAM (MT40A1G16KD-062E:E)	—	—
E28	DDR_ADDR9	DDR_ADDR9	DDR4 SDRAM (MT40A1G16KD-062E:E)	—	—
H27	DDR_BA0	DDR_BA0	DDR4 SDRAM (MT40A1G16KD-062E:E)	—	—
M28	DDR_BA1	DDR_BA1	DDR4 SDRAM (MT40A1G16KD-062E:E)	—	—
G28	DDR_BA2	DDR_BA2	DDR4 SDRAM (MT40A1G16KD-062E:E)	—	—
C29	DDR_CALIBRATION	DDR_CALIBRATION	DDR4 SDRAM (MT40A1G16KD-062E:E)	—	—
K29	DDR_CAS#	DDR_CAS#	DDR4 SDRAM (MT40A1G16KD-062E:E)	—	—
N28	DDR_CKE	DDR_CKE	DDR4 SDRAM (MT40A1G16KD-062E:E)	—	—
T28	DDR_CLK_N	DDR_CLK_N	DDR4 SDRAM (MT40A1G16KD-062E:E)	—	—
T29	DDR_CLK_P	DDR_CLK_P	DDR4 SDRAM (MT40A1G16KD-062E:E)	—	—
P28	DDR_CS0#	DDR_CS0#	DDR4 SDRAM (MT40A1G16KD-062E:E)	—	—
M29	DDR_CS1#	DDR_CS1#	DDR4 SDRAM (MT40A1G16KD-062E:E)	—	—
W29	DDR_DM0	DDR_DM0	DDR4 SDRAM (MT40A1G16KD-062E:E)	—	—
AC29	DDR_DM1	DDR_DM1	DDR4 SDRAM (MT40A1G16KD-062E:E)	—	—
V28	DDR_DQ0	DDR_DQ0	DDR4 SDRAM (MT40A1G16KD-062E:E)	—	—
AB29	DDR_DQ1	DDR_DQ1	DDR4 SDRAM (MT40A1G16KD-062E:E)	—	—
AC28	DDR_DQ10	DDR_DQ10	DDR4 SDRAM (MT40A1G16KD-062E:E)	—	—
AE29	DDR_DQ11	DDR_DQ11	DDR4 SDRAM (MT40A1G16KD-062E:E)	—	—
AH29	DDR_DQ12	DDR_DQ12	DDR4 SDRAM (MT40A1G16KD-062E:E)	—	—
AE28	DDR_DQ13	DDR_DQ13	DDR4 SDRAM (MT40A1G16KD-062E:E)	—	—
AF29	DDR_DQ14	DDR_DQ14	DDR4 SDRAM (MT40A1G16KD-062E:E)	—	—
AG29	DDR_DQ15	DDR_DQ15	DDR4 SDRAM (MT40A1G16KD-062E:E)	—	—
U28	DDR_DQ2	DDR_DQ2	DDR4 SDRAM (MT40A1G16KD-062E:E)	—	—
AB28	DDR_DQ3	DDR_DQ3	DDR4 SDRAM (MT40A1G16KD-062E:E)	—	—
V27	DDR_DQ4	DDR_DQ4	DDR4 SDRAM (MT40A1G16KD-062E:E)	—	—
W28	DDR_DQ5	DDR_DQ5	DDR4 SDRAM (MT40A1G16KD-062E:E)	—	—
U27	DDR_DQ6	DDR_DQ6	DDR4 SDRAM (MT40A1G16KD-062E:E)	—	—

Table 2.2 List of Pin Function Selection Used on the RTK9744L23C01000BE (3/17)

Pin Location	Pin Name	Pin Function	Description	SMARC Pin No.	SMARC Pin Name
V29	DDR_DQ7	DDR_DQ7	DDR4 SDRAM (MT40A1G16KD-062E:E)	—	—
AF28	DDR_DQ8	DDR_DQ8	DDR4 SDRAM (MT40A1G16KD-062E:E)	—	—
AD29	DDR_DQ9	DDR_DQ9	DDR4 SDRAM (MT40A1G16KD-062E:E)	—	—
Y28	DDR_DQS0_N	DDR_DQS0_N	DDR4 SDRAM (MT40A1G16KD-062E:E)	—	—
AA29	DDR_DQS0_P	DDR_DQS0_P	DDR4 SDRAM (MT40A1G16KD-062E:E)	—	—
AC27	DDR_DQS1_N	DDR_DQS1_N	DDR4 SDRAM (MT40A1G16KD-062E:E)	—	—
AC26	DDR_DQS1_P	DDR_DQS1_P	DDR4 SDRAM (MT40A1G16KD-062E:E)	—	—
N29	DDR_ODT0	DDR_ODT0	DDR4 SDRAM (MT40A1G16KD-062E:E)	—	—
N27	DDR_ODT1	DDR_ODT1	DDR4 SDRAM (MT40A1G16KD-062E:E)	—	—
J29	DDR_RAS#	DDR_RAS#	DDR4 SDRAM (MT40A1G16KD-062E:E)	—	—
B29	DDR_RESET#	DDR_RESET#	DDR4 SDRAM (MT40A1G16KD-062E:E)	—	—
H25	DDR_VDDQ	DDR_VDDQ	1.2V	—	—
M25	DDR_VDDQ	DDR_VDDQ	1.2V	—	—
N25	DDR_VDDQ	DDR_VDDQ	1.2V	—	—
U25	DDR_VDDQ	DDR_VDDQ	1.2V	—	—
V25	DDR_VDDQ	DDR_VDDQ	1.2V	—	—
AA25	DDR_VDDQ	DDR_VDDQ	1.2V	—	—
AB25	DDR_VDDQ	DDR_VDDQ	1.2V	—	—
J28	DDR_WE#	DDR_WE#	DDR4 SDRAM (MT40A1G16KD-062E:E)	—	—
AE18	DEBUGEN	DEBUGEN	DIP_SW (SW1)	—	—
AG18	DSI_CLKN	DSI_CLKN	MIPI DSI to HDMI conversion IC on the carrier board	S135	DSI0_CLK-
AG17	DSI_CLKP	DSI_CLKP	MIPI DSI to HDMI conversion IC on the carrier board	S134	DSI0_CLK+
AJ16	DSI_DATA0_N	DSI_DATA0_N	MIPI DSI to HDMI conversion IC on the carrier board	S126	DSI0_D0-
AH16	DSI_DATA0_P	DSI_DATA0_P	MIPI DSI to HDMI conversion IC on the carrier board	S125	DSI0_D0+
AJ17	DSI_DATA1_N	DSI_DATA1_N	MIPI DSI to HDMI conversion IC on the carrier board	S129	DSI0_D1-
AH17	DSI_DATA1_P	DSI_DATA1_P	MIPI DSI to HDMI conversion IC on the carrier board	S128	DSI0_D1+
AJ15	DSI_DATA2_N	DSI_DATA2_N	MIPI DSI to HDMI conversion IC on the carrier board	S132	DSI0_D2-
AH15	DSI_DATA2_P	DSI_DATA2_P	MIPI DSI to HDMI conversion IC on the carrier board	S131	DSI0_D2+
AJ18	DSI_DATA3_N	DSI_DATA3_N	MIPI DSI to HDMI conversion IC on the carrier board	S138	DSI0_D3-
AH18	DSI_DATA3_P	DSI_DATA3_P	MIPI DSI to HDMI conversion IC on the carrier board	S137	DSI0_D3+
AC17	DSI_VDD18	DSI_VDD18	1.8V	—	—
AC18	DSI_VDD18	DSI_VDD18	1.8V	—	—
N6	PVDD182533_0	PVDD182533_0	1.8V	—	—
U7	PVDD182533_1	PVDD182533_1	1.8V	—	—
AG2	EXCLK	EXCLK	Input 24MHz from 5P35023 for generating system clock	—	—
V7	VDD18	VDD18	1.8V	—	—

Table 2.2 List of Pin Function Selection Used on the RTK9744L23C01000BE (4/17)

Pin Location	Pin Name	Pin Function	Description	SMARC Pin No.	SMARC Pin Name
E8	MD_BOOT0	MD_BOOT0	Input BOOT_SEL0#, BOOT_SEL1#, BOOT_SEL2# logic states	P123, P124, P125	BOOT_SEL 0#,1#,2#
E7	MD_BOOT1	MD_BOOT1	Input BOOT_SEL0#, BOOT_SEL1#, BOOT_SEL2# logic states	P123, P124, P125	BOOT_SEL 0#,1#,2#
G7	MD_BOOT2	MD_BOOT2	Input BOOT_SEL0#, BOOT_SEL1#, BOOT_SEL2# logic states	P123, P124, P125	BOOT_SEL 0#,1#,2#
D23	MD_CLKS	MD_CLKS	Initial setting: 1 (Pull Up), should be controllable by resistor.	—	—
E23	MD_OSCDRV0	MD_OSCDRV0	Initial setting: 0 (Pull Down), should be controllable by resistor.	—	—
D27	MD_OSCDRV1	MD_OSCDRV1	Initial setting: 0 (Pull Down), should be controllable by resistor.	—	—
AJ2	NMI	NMI	Connected to the test pin (TP1)	—	—
G17	OTP_VDD18	OTP_VDD18	1.8V	—	—
A11	P0_0/IRQ0/SCI0_RXD/GTIOC0A/MTIOC0A/SCIF3_TXD	P0_0	For selecting the device connected to the SD/MMC ch0 interface Input SD0_DEV_SEL signal to identify the device connected to the SD ch0 interface by software	—	—
B12	P0_1/IRQ1/SCI0_TXD/GTIOC0B/MTIOC0B/SCIF3_RXD	IRQ1	Unused	—	—
C13	P1_0/IRQ2/SCI0_SCK/GTIOC1A/MTIOC0C/SCIF3_SCK	IRQ2	Ethernet0 PHY (KSZ9131RNXC)	—	—
A12	P1_1/IRQ3/SCI0_CTS_N_RTS_N/GTIOC1B/MTIOC0D	IRQ3	Ethernet1 PHY (KSZ9131RNXC)	—	—
AJ22	P10_0/DISP_DATA6/CAN_CLK/MTIOC6A/GTETRGA	P10_0	Unused	—	—
AH22	P10_1/DISP_DATA7/CAN0_TX/MTIOC6B/GTETRGB	CAN0_TX	CAN transceiver ch0 (*2) on the carrier board (*2)	P143	CAN0_TX
AG22	P11_0/DISP_DATA8/CAN0_RX/MTIOC6C/GTETRGC	CAN0_RX	CAN transceiver ch0 (*2) on the carrier board (*2)	P144	CAN0_RX
AF22	P11_1/DISP_DATA9/CAN0_TX_DATARATE_EN/MTIOC6D/GTETRGD	P11_1	Unused	—	—
AE22	P12_0/DISP_DATA10/CAN0_RX_DATARATE_EN/POE0_N/GTIOC7A	P12_0	Unused	—	—
AE23	P12_1/DISP_DATA11/CAN1_TX/POE4_N/GTIOC7B	CAN1_TX	CAN transceiver ch1 (*2) on the carrier board (*2)	P145	CAN1_TX

Table 2.2 List of Pin Function Selection Used on the RTK9744L23C01000BE (5/17)

Pin Location	Pin Name	Pin Function	Description	SMARC Pin No.	SMARC Pin Name
AF23	P13_0/DISP_DATA12/CAN1_RX/POE8_N/IRQ0	CAN1_RX	CAN transceiver ch1 (*2) on the carrier board (*2)	P146	CAN1_RX
AG23	P13_1/DISP_DATA13/CAN1_TX_DATARATE_EN/POE10_N/IRQ1	P13_1	Unused	—	—
AG26	P13_2/DISP_DATA14/CAN1_RX_DATARATE_EN/IRQ7/IRQ2	P13_2	Unused	—	—
AF27	P14_0/DISP_DATA15/SSI1_BCK/SD1_CD/MTCLKA	P14_0	Unused	—	—
AJ23	P14_1/DISP_DATA16/SSI1_RCK/SD1_WP/MTCLKB	P14_1	Unused	—	—
AH23	P15_0/DISP_DATA17/SSI1_TXD/GTIOC4A/MTCLKC	P15_0	Unused	—	—
AJ24	P15_1/DISP_DATA18/SSI1_RXD/GTIOC4B/MTCLKD	P15_1	Unused	—	—
AH24	P16_0/DISP_DATA19/SCIF2_TXD/GTIOC5A/IRQ3	P16_0	RAA215300	—	—
AJ25	P16_1/DISP_DATA20/SCIF2_RXD/GTIOC5B/IRQ4	P16_1	RAA215300	—	—
AH25	P17_0/DISP_DATA21/SCIF2_SCK/GTIOC6A/IRQ5	P17_0	Unused	—	—
AJ26	P17_1/DISP_DATA22/SCIF2_CTS/GTIOC6B/IRQ6	P17_1	Unused	—	—
AH26	P17_2/DISP_DATA23/SCIF2_RTS/IRQ7	P17_2	Unused	—	—
C2	P18_0/SD0_CD/GTIOC0A/RIIC3_SDA/MTIOC2A	RIIC3_SDA	RAA215300 and 5P35023 PMOD1 Type-6A and audio codec on the carrier board	S49	I2C_GP_DAT
D3	P18_1/SD0_WP/GTIOC0B/RIIC3_SCL/MTIOC2B	RIIC3_SCL	RAA215300 and 5P35023 PMOD1 Type-6A and audio codec on the carrier board	S48	I2C_GP_CK
B1	P19_0/SD1_CD/GTIOC3A/MTIOC1A/RIIC2_SDA	SD1_CD	uSD ch1 card slot on the carrier board	P35	SDIO_CD#
B2	P19_1/SD1_WP/GTIOC3B/MTIOC1B/RIIC2_SCL	P19_1	Unused	P33	SDIO_WP
B13	P2_0/IRQ4/ADC_TRG/GTIOC2A/MTIOC1A/SCIF4_TXD	P2_0	24-pin FFC connector on the carrier board	P109	GPIO1/CAM1_PWR#
A13	P2_1/IRQ5/GTIOC2B/MTIOC1B/SCIF4_RXD	IRQ5	MIPI-DSI to HDMI conversion IC on the carrier board	P110	GPIO2/CAM0_RST#

Table 2.2 List of Pin Function Selection Used on the RTK9744L23C01000BE (6/17)

Pin Location	Pin Name	Pin Function	Description	SMARC Pin No.	SMARC Pin Name
N1	P20_0/ET0_TXC_TX_CLK/RSPI0_CK/CAN_CLK	ET0_TXC_TX_CLK	Ethernet0 PHY (KSZ9131RNXC)	—	—
N2	P20_1/ET0_TX_CTL_TX_EN/RSPI0_MOSI/CAN0_TX	ET0_TX_CTL_TX_EN	Ethernet0 PHY (KSZ9131RNXC)	—	—
M1	P20_2/ET0_TXD0/RSPI0_MISO/CAN0_RX	ET0_TXD0	Ethernet0 PHY (KSZ9131RNXC)	—	—
M2	P21_0/ET0_TXD1/RSPI0_SSL/CAN0_TX_DATARATE_EN	ET0_TXD1	Ethernet0 PHY (KSZ9131RNXC)	—	—
L1	P21_1/ET0_TXD2/CAN0_RX_DATARATE_EN	ET0_TXD2	Ethernet0 PHY (KSZ9131RNXC)	—	—
L2	P22_0/ET0_TXD3/SSI0_BCK/CAN1_TX/MTCLKA	ET0_TXD3	Ethernet0 PHY (KSZ9131RNXC)	—	—
M3	P22_1/ET0_TX_ERR/SSI0_RCK/CAN1_RX/MTCLKB	ET0_TX_ERR	Unused	—	—
N4	P23_0/ET0_TX_COL/SSI0_TXD/CAN1_TX_DATARATE_EN/MTCLKC	ET0_TX_COL	Unused	—	—
M4	P23_1/ET0_TX_CRS/SSI0_RXD/CAN1_RX_DATARATE_EN/MTCLKD	ET0_TX_CRS	Unused	—	—
P2	P24_0/ET0_RXC_RX_CLK/SSI1_BCK/POE0_N	ET0_RXC_RX_CLK	Ethernet0 PHY (KSZ9131RNXC)	—	—
P1	P24_1/ET0_RX_CTL_RX_DV/SSI1_RCK/POE4_N	ET0_RX_CTL_RX_DV	Ethernet0 PHY (KSZ9131RNXC)	—	—
R2	P25_0/ET0_RXD0/SSI1_TXD/POE8_N	ET0_RXD0	Ethernet0 PHY (KSZ9131RNXC)	—	—
R1	P25_1/ET0_RXD1/SSI1_RXD/POE10_N	ET0_RXD1	Ethernet0 PHY (KSZ9131RNXC)	—	—
T2	P26_0/ET0_RXD2/RSPI1_CK/MTIOC8A	ET0_RXD2	Ethernet0 PHY (KSZ9131RNXC)	—	—
T1	P26_1/ET0_RXD3/RSPI1_MOSI/MTIOC8B	ET0_RXD3	Ethernet0 PHY (KSZ9131RNXC)	—	—
N3	P27_0/ET0_RX_ERR/RSPI1_MISO/MTIOC8C	ET0_RX_ERR	Unused	—	—
U2	P27_1/ET0_MDC/RSPI1_SSL/MTIOC8D	ET0_MDC	Ethernet0 PHY (KSZ9131RNXC)	—	—
U1	P28_0/ET0_MDIO	ET0_MDIO	Ethernet0 PHY (KSZ9131RNXC)	—	—
R3	P28_1/ET0_LINKSTA	ET0_LINKSTA	Ethernet0 PHY (KSZ9131RNXC)	—	—

Table 2.2 List of Pin Function Selection Used on the RTK9744L23C01000BE (7/17)

Pin Location	Pin Name	Pin Function	Description	SMARC Pin No.	SMARC Pin Name
AB2	P29_0/ET1_TXC_TX_CLK/CAM_PCLK/USB1_VBUSEN/SSI2_BCK	ET1_TXC_TX_CLK	Ethernet0 PHY (KSZ9131RNXC)	—	—
Y1	P29_1/ET1_TX_CTL_TX_EN/CAM_HREF/USB1_OVRCUR/SSI2_RCK	ET1_TX_CTL_TX_EN	Ethernet0 PHY (KSZ9131RNXC)	—	—
A14	P3_0/IRQ6/RIIC2_SDA/GTIOC3A/MTIOC2A/SCIF4_SCK	P3_0/IRQ6	Unused	P108	GPIO0/CAM0_PWR#
B14	P3_1/IRQ7/RIIC2_SCL/GTIOC3B/MTIOC2B/CAM_FIELD	P3_1/IRQ7	PMOD1 Type-3A on the carrier board	P118	GPIO10
AB1	P30_0/ET1_TXD0/CAM_VSYNC/SSI2_DATA	ET1_TXD0	Ethernet1 PHY (KSZ9131RNXC)	—	—
AA2	P30_1/ET1_TXD1/CAM_DATA15	ET1_TXD1	Ethernet1 PHY (KSZ9131RNXC)	—	—
AA1	P31_0/ET1_TXD2/CAM_DATA0/SCI1_RXD/SSI3_BCK	ET1_TXD2	Ethernet1 PHY (KSZ9131RNXC)	—	—
Y2	P31_1/ET1_TXD3/CAM_DATA1/SCI1_TXD/SSI3_RCK	ET1_TXD3	Ethernet1 PHY (KSZ9131RNXC)	—	—
U3	P32_0/ET1_TX_ERR/CAM_DATA2/SCI1_SCK/MTIOC3A/SSI3_TXD	ET1_TX_ERR	Unused	—	—
V4	P32_1/ET1_TX_COL/CAM_DATA3/SCI1_CTS_N_RTS_N/MTIOC3B/SSI3_RXD	ET1_TX_COL	Unused	—	—
U4	P33_0/ET1_TX_CRS/CAM_DATA4/GTIOC2A/SCIF2_TXD/GTIOC0A	ET1_TX_CRS	Unused	—	—
AC1	P33_1/ET1_RXC_RX_CLK/CAM_DATA5/GTIOC2B/SCIF2_RXD/GTIOC0B	ET1_RXC_RX_CLK	Ethernet1 PHY (KSZ9131RNXC)	—	—
AC2	P34_0/ET1_RX_CTL_RX_DV/CAM_DATA6/GTIOC3A/MTIOC0A/GTIOC1A	ET1_RX_CTL_RX_DV	Ethernet1 PHY (KSZ9131RNXC)	—	—
AC3	P34_1/ET1_RXD0/CAM_DATA7/GTIOC3B/MTIOC0B/GTIOC1B	ET1_RXD0	Ethernet1 PHY (KSZ9131RNXC)	—	—
AC4	P35_0/ET1_RXD1/CAM_DATA8/SSI0_BCK/MTIOC0C/GTIOC2A	ET1_RXD1	Ethernet1 PHY (KSZ9131RNXC)	—	—

Table 2.2 List of Pin Function Selection Used on the RTK9744L23C01000BE (8/17)

Pin Location	Pin Name	Pin Function	Description	SMARC Pin No.	SMARC Pin Name
AB4	P35_1/ET1_RXD2/CAM_DATA9/SSI0_RCK/MTIOC0D/GTIOC2B	ET1_RXD2	Ethernet1 PHY (KSZ9131RNXC)	—	—
AB3	P36_0/ET1_RXD3/CAM_DATA10/SSI0_TXD/MTIOC3C/GTETRGA	ET1_RXD3	Ethernet1 PHY (KSZ9131RNXC)	—	—
V3	P36_1/ET1_RX_ERR/CAM_DATA11/SSI0_RXD/MTIOC3D/GTETRGB	ET1_RX_ERR	Unused	—	—
W2	P37_0/ET1_MDC/CAM_DATA12/SCIF2_SCK/GTETRGC	ET1_MDC	Ethernet1 PHY (KSZ9131RNXC)	—	—
W1	P37_1/ET1_MDIO/CAM_DATA13/SCIF2_CTS/GTETRGD	ET1_MDIO	Ethernet1 PHY (KSZ9131RNXC)	—	—
V2	P37_2/ET1_LINKSTA/CAM_DATA14/SCIF2_RTS	ET1_LINKSTA	Ethernet1 PHY (KSZ9131RNXC)	—	—
A15	P38_0/SCIF0_TXD/GTETRGA/CAN_CLK/MTIOC4A/USB1_VBUSEN	SCIF0_TXD	Debug UART on the carrier board	P140	SER3_TX
B15	P38_1/SCIF0_RXD/GTETRGB/CAN0_TX/MTIOC4B/USB1_OVRCUR	SCIF0_RXD	Debug UART on the carrier board	P141	SER3_RX
A16	P39_0/SCIF0_SCK/GTETRGC/CAN0_RX/MTIOC4C	P39_0	For selecting voltage of the uSD ch0 card	—	—
C15	P39_1/SCIF0_CTS/GTETRGD/CAN0_TX_DATARATE_EN/MTIOC4D	P39_1	RAA215300 For selecting voltage of the uSD ch1 card on the carrier board	—	—
B16	P39_2/SCIF0_RTS/CAN0_RX_DATARATE_EN	P39_2	uSD ch1 card slot on the carrier board For controlling power on/off of the card slot	P37	SDIO_PWR_EN
AJ5	P4_0/USB0_VBUSEN/SCIF2_TXD/MTIOC7A/ADC_TRG	USB0_VBUSEN	USB2.0 OTG on the carrier board Include gate USB0_VBUSEN state	P62	USB0_EN_OC#
AH6	P4_1/SCIF2_RXD/MTIOC7B	P4_1	uSD ch0 card slot For controlling power on/off of the card slot	P108	—
C17	P40_0/SCIF1_TXD/GTIOC6A/CAN1_TX/MTIC5U/SCI0_RXD	SCIF1_TXD	Unused	P134	SER1_TX
B17	P40_1/SCIF1_RXD/GTIOC6B/CAN1_RX/MTIC5V/SCI0_TXD	SCIF1_RXD	Unused	P135	SER1_RX
A17	P40_2/SCIF1_SCK/CAN1_TX_DATARATE_EN/MTIC5W/SCI0_SCK	P40_2	24-pin FFC connector on the carrier board	P111	GPIO3/CAM1_RST#

Table 2.2 List of Pin Function Selection Used on the RTK9744L23C01000BE (9/17)

Pin Location	Pin Name	Pin Function	Description	SMARC Pin No.	SMARC Pin Name
E17	P41_0/SCIF1_CTS/GTIOC7A/CAN1_RX_DATARATE_EN/GTIOC3A/SCI0_CTS_N_RTS_N	P41_0	PMOD0 Type-2A on the carrier board	P114	GPIO6/TACHIN
A18	P41_1/SCIF1_RTS/GTIOC7B/GTIOC3B	P41_1	For selecting the device connected to the SD/MMC ch0 interface	P113	—
AG4	P42_0/USB1_VBUSEN/RSPI2_CK/CAN_CLK/SCIF2_TXD/MTIOC7A	USB1_VBUSEN	USB2.0 Host on the carrier board Include gate USB1_VBUSEN state	P67	USB1_EN_OC#
AE7	P42_1/USB1_OVRCUR/RSPI2_MOSI/CAN0_TX/SCIF2_RXD/MTIOC7B	USB1_OVRCUR	USB2.0 Host on the carrier board Include gate USB1_OVRCUR state	P67	USB1_EN_OC#
AJ3	P42_2/ADC_TRG/RSPI2_MISO/CAN0_RX/SCIF2_SCK/MTIOC7C	P42_2	CAN transceiver ch0 (*2) or PMOD1 Type-6A on the carrier board	P116	GPIO8
AH3	P42_3/RIIC2_SDA/RSPI2_SSL/CAN0_TX_DATARATE_EN/SCIF2_CTS/MTIOC7D	P42_3	CAN transceiver ch1 (*2) or PMOD1 Type-6A on the carrier board	P117	GPIO9
AC5	P42_4/RIIC2_SCL/CAM_FIELD/CAN0_RX_DATARATE_EN/SCIF2_RTS	P42_4	PMOD1 Type-6A on the carrier board	S142	GPIO12
B18	P43_0/RSPI0_CK/GTIOC4A/GTIOC6A/IRQ4/MTIOC8A	P43_0/IRQ4	PMOD0 Type-2A on the carrier board	P112	GPIO4/HDA_RST#
D17	P43_1/RSPI0_MOSI/GTIOC4B/GTIOC6B/IRQ5/MTIOC8B	P43_1	PMOD0 Type-2A on the carrier board	P115	GPIO7
E18	P43_2/RSPI0_MISO/GTIOC5A/IRQ6/MTIOC8C	P43_2	PMOD0 Type-2A on the carrier board	P113	GPIO5/PWM_OUT#
C18	P43_3/RSPI0_SSL/GTIOC5B/IRQ7/MTIOC8D	P43_3	Unused	—	—
A19	P44_0/RSPI1_CK/SSI1_BCK/CAN1_TX/MTIOC3A/GTIOC6A	RSPI1_CK	PMOD0 Type-2A on the carrier board	P56	SPI1_Clock
F17	P44_1/RSPI1_MOSI/SSI1_RCK/CAN1_RX/MTIOC3B/GTIOC6B	RSPI1_MOSI	PMOD0 Type-2A on the carrier board	P57	SPI1_DIN
D18	P44_2/RSPI1_MISO/SSI1_TXD/CAN1_TX_DATARATE_EN/MTIOC3C/GTIOC7A	RSPI1_MISO	PMOD0 Type-2A on the carrier board	P58	SPI1_DO
B19	P44_3/RSPI1_SSL/SSI1_RXD/CAN1_RX_DATARATE_EN/MTIOC3D/GTIOC7B	RSPI1_SSL	PMOD0 Type-2A on the carrier board	P54	SPI1_CS0#
A8	P45_0/SSI0_BCK/POE0_N/SCI1_RXD	SSI0_BCK	Audio codec on the carrier board	S42	I2S0_CK

Table 2.2 List of Pin Function Selection Used on the RTK9744L23C01000BE (10/17)

Pin Location	Pin Name	Pin Function	Description	SMARC Pin No.	SMARC Pin Name
D12	P45_1/SSI0_RCK/POE4_N/SCI1_TXD	SSI0_RCK	Audio codec on the carrier board	S39	I2S0_LRCK
A9	P45_2/SSI0_TXD/POE8_N/SCI1_SCK	SSI0_TXD	Audio codec on the carrier board	S40	I2S0_SDOUT
B9	P45_3/SSI0_RXD/POE10_N/SCI1_CTS_N_RTS_N	SSI0_RXD	Audio codec on the carrier board	S41	I2S0_SDIN
B10	P46_0/SSI1_BCK/GTETRGA/CAN1_TX/RIIC2_SDA	SSI1_BCK	MIPI DSI to HDMI conversion IC on the carrier board	S53	I2S2_CK
A10	P46_1/SSI1_RCK/GTETRGB/CAN1_RX/RIIC2_SCL	SSI1_RCK	MIPI DSI to HDMI conversion IC on the carrier board	S50	I2S2_LRCK
C12	P46_2/SSI1_TXD/GTETRGC/CAN1_TX_DATARATE_EN/RIIC3_SDA	SSI1_TXD	MIPI DSI to HDMI conversion IC on the carrier board	S51	I2S2_SDOUT
D13	P46_3/SSI1_RXD/GTETRGD/CAN1_RX_DATARATE_EN/RIIC3_SCL	SSI1_RXD	Unused	S52	I2S2_SDIN
B20	P47_0/SCI0_RXD/SD0_CD/IRQ0/SSI1_BCK/RSPI0_CK	SD0_CD	uSD ch0 card slot	—	—
A20	P47_1/SCI0_TXD/SD0_WP/IRQ1/SSI1_RCK/RSPI0_MOSI	P47_1	Unused	—	—
A21	P47_2/SCI0_SCK/SD1_CD/IRQ2/SSI1_TXD/RSPI0_MISO	P47_2	PMOD1 Type-6A on the carrier board	S123	GPIO13
B21	P47_3/SCI0_CTS_N_RTS_N/SD1_WP/IRQ3/SSI1_RXD/RSPI0_SSL	P47_3	Unused	P118	—
B22	P48_0/SCIF2_TXD/RSPI1_CK/RIIC2_SDA/MTCLKA	SCIF2_TXD	PMOD1 Type-3A on the carrier board	P129	SER0_TX
A23	P48_1/SCIF2_RXD/RSPI1_MOSI/RIIC2_SCL/MTCLKB	SCIF2_RXD	PMOD1 Type-3A on the carrier board	P130	SER0_RX
A22	P48_2/SCIF2_SCK/RSPI1_MISO/RIIC3_SDA/MTCLKC	P48_2	Unused	—	—
C22	P48_3/SCIF2_CTS/RSPI1_SSL/RIIC3_SCL/MTCLKD	SCIF2_CTS	PMOD1 Type-3A on the carrier board	P132	SER0_CTS#
B23	P48_4/SCIF2_RTS/ADC_TRG	SCIF2_RTS	PMOD1 Type-3A on the carrier board	P131	SER0_RTS#
AJ4	P5_0/USB0_OVRCUR/SCIF2_SCK/MTIOC7C/SSI2_BCK	USB0_OVRCUR	USB2.0 OTG on the carrier board include gate USB0_OVRCUR state	P62	USB0_EN_OC#

Table 2.2 List of Pin Function Selection Used on the RTK9744L23C01000BE (11/17)

Pin Location	Pin Name	Pin Function	Description	SMARC Pin No.	SMARC Pin Name
AH4	P5_1/USB0_OTG_ID/SCIF2_CTS/MTIOC7D/SSI2_RCK	USB0_OTG_ID	USB2.0 OTG on the carrier board USB_OTG_ID state	P64	USB0_OTG_ID
AH5	P5_2/USB0_OTG_EXICEN/SCIF2_RTS/SSI2_DATA	P5_2	PMOD1 Type-3A on the carrier board	P119	GPIO11
AJ27	P6_0/DISP_CLK/SSI0_BCK/USB0_VBUSEN/MTIOC1A	P6_0	Unused	—	—
AH27	P6_1/DISP_HSYNC/SSI0_RCK/MTIOC1B	P6_1	Unused	—	—
AJ28	P7_0/DISP_VSYNC/SSI0_TXD/USB0_OVRCUR/MTIC5U	P7_0	Unused	—	—
AH28	P7_1/DISP_DE/SSI0_RXD/USB0_OTG_ID/MTIC5V	P7_1	Unused	—	—
AJ19	P7_2/DISP_DATA0/USB0_OTG_EXICEN/MTIC5W	P7_2	Unused	—	—
AH19	P8_0/DISP_DATA1/USB1_VBUSEN/RSPI2_CK/RIIC3_SCL	P8_0	Unused	—	—
AJ20	P8_1/DISP_DATA2/USB1_OVRCUR/RSPI2_MOSI/RIIC3_SDA	P8_1	Unused	—	—
AH20	P8_2/DISP_DATA3/RSPI2_MISO	P8_2	Unused	—	—
AJ21	P9_0/DISP_DATA4/ADC_TRG/RSPI2_SSL/MTIOC2A	ADC_TRG	Pin header CN1 for ADC input	—	—
AH21	P9_1/DISP_DATA5/MTIOC2B	P9_1	Unused	—	—
N7	PLL1_AVDD18	PLL1_AVDD18	1.8V	—	—
W9	PLL23_AVDD18	PLL23_AVDD18	1.8V	—	—
V5	PLL23_DVDD11	PLL23_DVDD11	1.1V	—	—
U23	PLL4_AVDD18	PLL4_AVDD18	1.8V	—	—
AA15	PLL5_DVDD11	PLL5_DVDD11	1.1V	—	—
G13	PLL6_AVDD18	PLL6_AVDD18	1.8V	—	—
AF3	PRST#	PRST#	Input system reset signal from RAA215300	—	—
AC7	PVDD	PVDD	3.3V	—	—
AC12	PVDD	PVDD	3.3V	—	—
AC22	PVDD	PVDD	3.3V	—	—

Table 2.2 List of Pin Function Selection Used on the RTK9744L23C01000BE (12/17)

Pin Location	Pin Name	Pin Function	Description	SMARC Pin No.	SMARC Pin Name
AC23	PVDD	PVDD	3.3V	—	—
H7	PVDD	PVDD	3.3V	—	—
E13	PVDD	PVDD	3.3V	—	—
G18	PVDD	PVDD	3.3V	—	—
G23	PVDD	PVDD	3.3V	—	—
B6	QSPI_INT#	QSPI_INT#	Connected to pull-up by SPI_PVDD power supply (*1)	—	—
A5	QSPI_RESET#	QSPI_RESET#	QSPI Flash Memory (MT25QU512ABB8E12-0SIT)	—	—
B5	QSPI_WP#	QSPI_WP#	Unused	—	—
A3	QSPI0_IO0	QSPI0_IO0	QSPI Flash Memory (MT25QU512ABB8E12-0SIT)	—	—
B3	QSPI0_IO1	QSPI0_IO1	QSPI Flash Memory (MT25QU512ABB8E12-0SIT)	—	—
A4	QSPI0_IO2	QSPI0_IO2	QSPI Flash Memory (MT25QU512ABB8E12-0SIT)	—	—
B4	QSPI0_IO3	QSPI0_IO3	QSPI Flash Memory (MT25QU512ABB8E12-0SIT)	—	—
C4	QSPI0_SPCLK	QSPI0_SPCLK	QSPI Flash Memory (MT25QU512ABB8E12-0SIT)	—	—
A2	QSPI0_SSL	QSPI0_SSL	QSPI Flash Memory (MT25QU512ABB8E12-0SIT)	—	—
C7	QSPI1_IO0	QSPI1_IO0	Unused	—	—
D7	QSPI1_IO1	QSPI1_IO1	Unused	—	—
A6	QSPI1_IO2	QSPI1_IO2	Unused	—	—
D8	QSPI1_IO3	QSPI1_IO3	Unused	—	—
B7	QSPI1_SPCLK	QSPI1_SPCLK	Unused	—	—
C8	QSPI1_SSL	QSPI1_SSL	Unused	—	—
B24	RIIC0_SCL	RIIC0_SCL	24-pin FFC connector on the carrier board	S1	I2C_CAM1_CK
A25	RIIC0_SDA	RIIC0_SDA	24-pin FFC connector on the carrier board	S2	I2C_CAM1_DAT
C23	RIIC1_SCL	RIIC1_SCL	MIPI DSI to HDMI conversion IC on the carrier board	S139	I2C_LCD_CK
A24	RIIC1_SDA	RIIC1_SDA	MIPI DSI to HDMI conversion IC on the carrier board	S140	I2C_LCD_DAT
F1	SD0_CLK	SD0_CLK	eMMC Memory (MTFC64GASAQHD-IT) or uSD ch0 card slot	—	—
F2	SD0_CMD	SD0_CMD	eMMC Memory (MTFC64GASAQHD-IT)	—	—
G2	SD0_DATA0	SD0_DATA0	eMMC Memory (MTFC64GASAQHD-IT)	—	—

Table 2.2 List of Pin Function Selection Used on the RTK9744L23C01000BE (13/17)

Pin Location	Pin Name	Pin Function	Description	SMARC Pin No.	SMARC Pin Name
H4	SD0_DATA1	SD0_DATA1	eMMC Memory (MTFC64GASAQHD-IT)	—	—
G3	SD0_DATA2	SD0_DATA2	eMMC Memory (MTFC64GASAQHD-IT) or uSD ch0 card slot	—	—
G4	SD0_DATA3	SD0_DATA3	eMMC Memory (MTFC64GASAQHD-IT) or uSD ch0 card slot	—	—
E1	SD0_DATA4	SD0_DATA4	eMMC Memory (MTFC64GASAQHD-IT)	—	—
D1	SD0_DATA5	SD0_DATA5	eMMC Memory (MTFC64GASAQHD-IT)	—	—
E2	SD0_DATA6	SD0_DATA6	eMMC Memory (MTFC64GASAQHD-IT)	—	—
D2	SD0_DATA7	SD0_DATA7	eMMC Memory (MTFC64GASAQHD-IT)	—	—
H5	SD0_PVDD	SD0_PVDD	1.8V/3.3V	—	—
C1	SD0_RST#	SD0_RST#	eMMC Memory (MTFC64GASAQHD-IT)	—	—
H3	SD1_CLK	SD1_CLK	uSD ch1 card slot on the carrier board	P36	SDIO_CK
J2	SD1_CMD	SD1_CMD	uSD ch1 card slot on the carrier board	P34	SDIO_CMD
H1	SD1_DATA0	SD1_DATA0	uSD ch1 card slot on the carrier board	P39	SDIO_D0
H2	SD1_DATA1	SD1_DATA1	uSD ch1 card slot on the carrier board	P40	SDIO_D1
K2	SD1_DATA2	SD1_DATA2	uSD ch1 card slot on the carrier board	P41	SDIO_D2
J1	SD1_DATA3	SD1_DATA3	uSD ch1 card slot on the carrier board	P42	SDIO_D3
M6	SD1_PVDD	SD1_PVDD	1.8V/3.3V	—	—
F8	SPI_PVDD	SPI_PVDD	1.8V	—	—
AE1	TCK/SWDCLK	TCK/SWDCLK	Connected to JTAG connector (CN2)	—	—
AF1	TDI	TDI	Connected to JTAG connector (CN2)	—	—
AE2	TDO	TDO	Connected to JTAG connector (CN2)	—	—
AD18	VSS	VSS	GND	—	—
AD2	TMS/SWDIO	TMS/SWDIO	Connected to JTAG connector (CN2)	—	—
AF2	TRST#	TRST#	Connected to JTAG connector (CN2)	—	—
AB7	VDD18	VDD18	1.8V	—	—
AG8	USB_AVDD18	USB_AVDD18	1.8V	—	—
AG7	USB_RREF	USB_RREF	Connected to GND via the 1.8Ω resistor	—	—
AF7	USB_VDD18	USB_VDD18	1.8V	—	—
AF8	USB_VDD18	USB_VDD18	1.8V	—	—
AD8	USB_VDD33	USB_VDD33	3.3V	—	—
AE8	USB_VDD33	USB_VDD33	3.3V	—	—
AJ6	VSS	VSS	GND	—	—
AH7	VSS	VSS	GND	—	—
AC8	VSS	VSS	GND	—	—
AJ9	VSS	VSS	GND	—	—
AJ8	USB0_DM	USB0_DM	USB2.0 OTG on the carrier board	P61	USB0-
AH9	USB0_DP	USB0_DP	USB2.0 OTG on the carrier board	P60	USB0+
AH10	USB0_VBUSIN	USB0_VBUSIN	USB2.0 OTG on the carrier board	P63	USB0_VBUS_DET

Table 2.2 List of Pin Function Selection Used on the RTK9744L23C01000BE (14/17)

Pin Location	Pin Name	Pin Function	Description	SMARC Pin No.	SMARC Pin Name
AJ7	USB1_DM	USB1_DM	USB2.0 Host on the carrier board	P66	USB1-
AH8	USB1_DP	USB1_DP	USB2.0 Host on the carrier board	P65	USB1+
J9	VDD	VDD	1.1V	—	—
L9	VDD	VDD	1.1V	—	—
N9	VDD	VDD	1.1V	—	—
R9	VDD	VDD	1.1V	—	—
U9	VDD	VDD	1.1V	—	—
AA9	VDD	VDD	1.1V	—	—
K10	VDD	VDD	1.1V	—	—
M10	VDD	VDD	1.1V	—	—
P10	VDD	VDD	1.1V	—	—
T10	VDD	VDD	1.1V	—	—
V10	VDD	VDD	1.1V	—	—
Y10	VDD	VDD	1.1V	—	—
J11	VDD	VDD	1.1V	—	—
AA11	VDD	VDD	1.1V	—	—
K12	VDD	VDD	1.1V	—	—
Y12	VDD	VDD	1.1V	—	—
J13	VDD	VDD	1.1V	—	—
AA13	VDD	VDD	1.1V	—	—
K14	VDD	VDD	1.1V	—	—
Y14	VDD	VDD	1.1V	—	—
J15	VDD	VDD	1.1V	—	—
K16	VDD	VDD	1.1V	—	—
Y16	VDD	VDD	1.1V	—	—
J17	VDD	VDD	1.1V	—	—
AA17	VDD	VDD	1.1V	—	—
K18	VDD	VDD	1.1V	—	—
Y18	VDD	VDD	1.1V	—	—
J19	VDD	VDD	1.1V	—	—
AA19	VDD	VDD	1.1V	—	—
K20	VDD	VDD	1.1V	—	—
M20	VDD	VDD	1.1V	—	—
P20	VDD	VDD	1.1V	—	—
T20	VDD	VDD	1.1V	—	—
V20	VDD	VDD	1.1V	—	—
Y20	VDD	VDD	1.1V	—	—
J21	VDD	VDD	1.1V	—	—
L21	VDD	VDD	1.1V	—	—
N21	VDD	VDD	1.1V	—	—
R21	VDD	VDD	1.1V	—	—

Table 2.2 List of Pin Function Selection Used on the RTK9744L23C01000BE (15/17)

Pin Location	Pin Name	Pin Function	Description	SMARC Pin No.	SMARC Pin Name
U21	VDD	VDD	1.1V	—	—
W21	VDD	VDD	1.1V	—	—
AA21	VDD	VDD	1.1V	—	—
A1	VSS	VSS	GND	—	—
G1	VSS	VSS	GND	—	—
K1	VSS	VSS	GND	—	—
V1	VSS	VSS	GND	—	—
AD1	VSS	VSS	GND	—	—
AJ1	VSS	VSS	GND	—	—
AH2	VSS	VSS	GND	—	—
G5	VSS	VSS	GND	—	—
M5	VSS	VSS	GND	—	—
N5	VSS	VSS	GND	—	—
U5	VSS	VSS	GND	—	—
AB5	VSS	VSS	GND	—	—
H6	VSS	VSS	GND	—	—
U6	VSS	VSS	GND	—	—
V6	VSS	VSS	GND	—	—
AB6	VSS	VSS	GND	—	—
A7	VSS	VSS	GND	—	—
M7	VSS	VSS	GND	—	—
G8	VSS	VSS	GND	—	—
AJ10	VSS	VSS	GND	—	—
L11	VSS	VSS	GND	—	—
N11	VSS	VSS	GND	—	—
R11	VSS	VSS	GND	—	—
U11	VSS	VSS	GND	—	—
W11	VSS	VSS	GND	—	—
F12	VSS	VSS	GND	—	—
M12	VSS	VSS	GND	—	—
P12	VSS	VSS	GND	—	—
T12	VSS	VSS	GND	—	—
V12	VSS	VSS	GND	—	—
AE12	VSS	VSS	GND	—	—
AF12	VSS	VSS	GND	—	—
F13	VSS	VSS	GND	—	—
L13	VSS	VSS	GND	—	—
N13	VSS	VSS	GND	—	—
R13	VSS	VSS	GND	—	—
U13	VSS	VSS	GND	—	—
W13	VSS	VSS	GND	—	—
AE13	VSS	VSS	GND	—	—
AF13	VSS	VSS	GND	—	—

Table 2.2 List of Pin Function Selection Used on the RTK9744L23C01000BE (16/17)

Pin Location	Pin Name	Pin Function	Description	SMARC Pin No.	SMARC Pin Name
M14	VSS	VSS	GND	—	—
P14	VSS	VSS	GND	—	—
T14	VSS	VSS	GND	—	—
V14	VSS	VSS	GND	—	—
L15	VSS	VSS	GND	—	—
N15	VSS	VSS	GND	—	—
R15	VSS	VSS	GND	—	—
U15	VSS	VSS	GND	—	—
W15	VSS	VSS	GND	—	—
AG15	VSS	VSS	GND	—	—
M16	VSS	VSS	GND	—	—
P16	VSS	VSS	GND	—	—
T16	VSS	VSS	GND	—	—
V16	VSS	VSS	GND	—	—
L17	VSS	VSS	GND	—	—
N17	VSS	VSS	GND	—	—
R17	VSS	VSS	GND	—	—
U17	VSS	VSS	GND	—	—
W17	VSS	VSS	GND	—	—
AD17	VSS	VSS	GND	—	—
AE17	VSS	VSS	GND	—	—
AF17	VSS	VSS	GND	—	—
F18	VSS	VSS	GND	—	—
M18	VSS	VSS	GND	—	—
P18	VSS	VSS	GND	—	—
T18	VSS	VSS	GND	—	—
V18	VSS	VSS	GND	—	—
AF18	VSS	VSS	GND	—	—
L19	VSS	VSS	GND	—	—
N19	VSS	VSS	GND	—	—
R19	VSS	VSS	GND	—	—
U19	VSS	VSS	GND	—	—
W19	VSS	VSS	GND	—	—
F22	VSS	VSS	GND	—	—
G22	VSS	VSS	GND	—	—
AD22	VSS	VSS	GND	—	—
V23	VSS	VSS	GND	—	—
H24	VSS	VSS	GND	—	—
U24	VSS	VSS	GND	—	—
V24	VSS	VSS	GND	—	—

Table 2.2 List of Pin Function Selection Used on the RTK9744L23C01000BE (17/17)

Pin Location	Pin Name	Pin Function	Description	SMARC Pin No.	SMARC Pin Name
G25	VSS	VSS	GND	—	—
AC25	VSS	VSS	GND	—	—
G26	VSS	VSS	GND	—	—
H26	VSS	VSS	GND	—	—
M26	VSS	VSS	GND	—	—
N26	VSS	VSS	GND	—	—
U26	VSS	VSS	GND	—	—
V26	VSS	VSS	GND	—	—
AB27	VSS	VSS	GND	—	—
D28	VSS	VSS	GND	—	—
R28	VSS	VSS	GND	—	—
AA28	VSS	VSS	GND	—	—
AD28	VSS	VSS	GND	—	—
AG28	VSS	VSS	GND	—	—
A29	VSS	VSS	GND	—	—
U29	VSS	VSS	GND	—	—
Y29	VSS	VSS	GND	—	—
AJ29	VSS	VSS	GND	—	—
D22	WDTOVF_ PERROUT#	WDTOVF_ PERROUT#	Input hardware reset signal from RAA215300	—	—
AH1	XIN	XIN	GND	—	—
AG1	XOUT	XOUT	Open	—	—

NOTES

1. This pin is treated as open in the schematic, but this is incorrect.
2. The CAN connector is implemented on the RZ SMARC Series Carrier Board (P/N: RTK97X4XXXB00000BE), but the CAN-FD interface cannot be used because a CAN transceiver is not fitted.
   The following carrier boards are equipped with a CAN transceiver and the CAN-FD interface is available already.
   S.LOT# in the outer box label: 000251812 or later
   S.LOT# label on the carrier board: 251812 or later

2.3 Memory

QSPI flash memory and DDR4 SDRAM are mounted in RTK9744L23C01000BE as external memories.

Please refer to the following for details

2.3.1 QSPI Flash Memory

Figure 2.1 shows a block diagram of the Serial Flash Memory interface.

The QSPI flash memory is controlled by the SPI multi-I/O bus controller (SPIBSC) that is with built-in to the RZ/G2L. This memory supports both single data rate (SDR) and double data rate (DDR) transfers at 66MHz and 50MHz clock frequency.

NOTE

The pull-up resistor on the clock line "RZ_QSPI0_SPCLK" is optional.

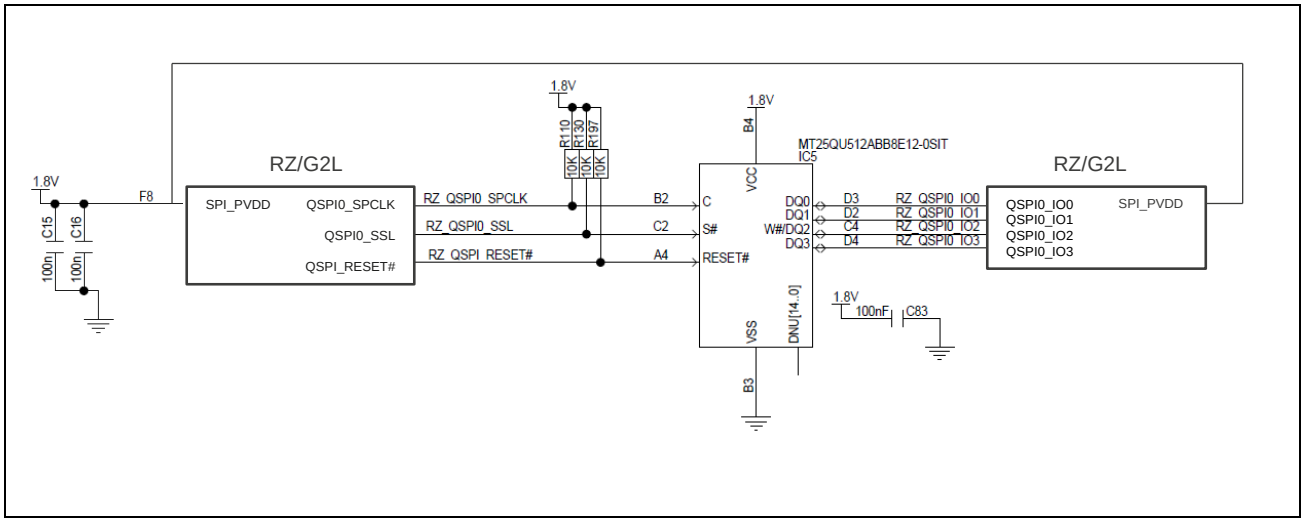

Figure 2.1 Block Diagram of Serial Flash Memory I/F

2.3.2 DDR4 SDRAM

Figure 2.2 shows a block diagram of the DDR4 SDRAM interface.

The DDR4 SDRAM is controlled by the DDD3L/DDR4 SDRAM Memory Controller (MEMC) that is with built-in to the RZ/G2L. This interface supports up to DDR4-1600 SDRAM, a data bus width of 16-bit and inline ECC.

This interface complies with JEDEC STANDARD JESD79-4C.

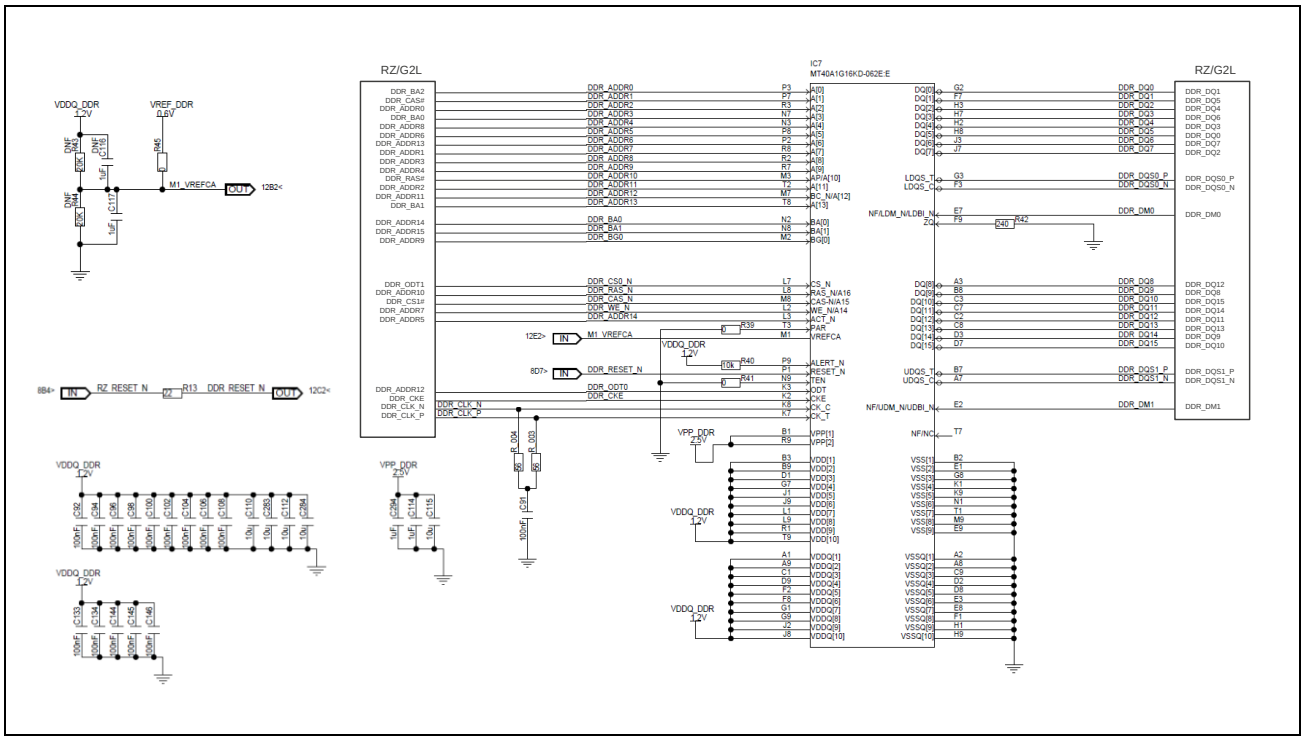

Figure 2.2 Block Diagram of DDR4 SDRAM

2.4 Gigabit Ethernet Interface

Figure 2.3 and **Figure 2.4** show a block diagram of Gigabit Ethernet0 and Ethernet1 interface.

The Gigabit Ethernet Interface is controlled by the Ethernet controller (E-MAC) hat conforms to the definition of the MAC (Media Access Control) layer that is with built-in to the RZ/G2L. The Ethernet clock is sourced from a clock generator connected to the Ethernet PHY.

This interface complies with IEEE802.3 PHY RGMII.

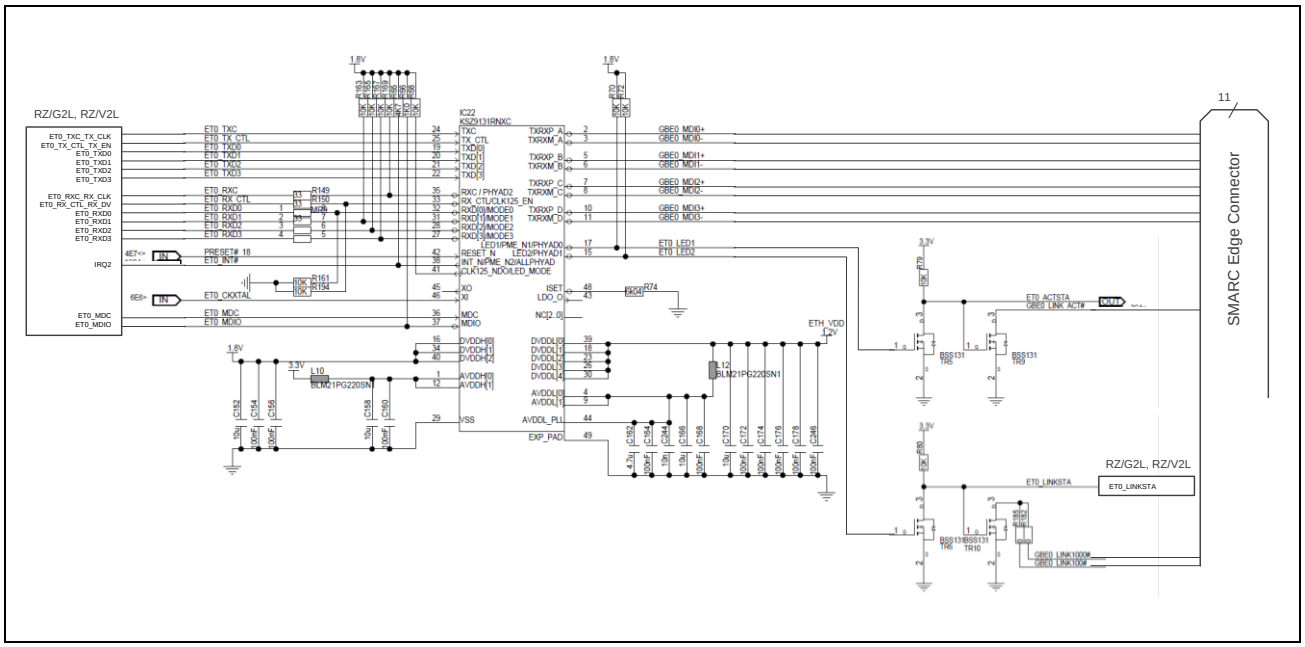

Figure 2.3 Block Diagram of Gigabit Ethernet0 I/F

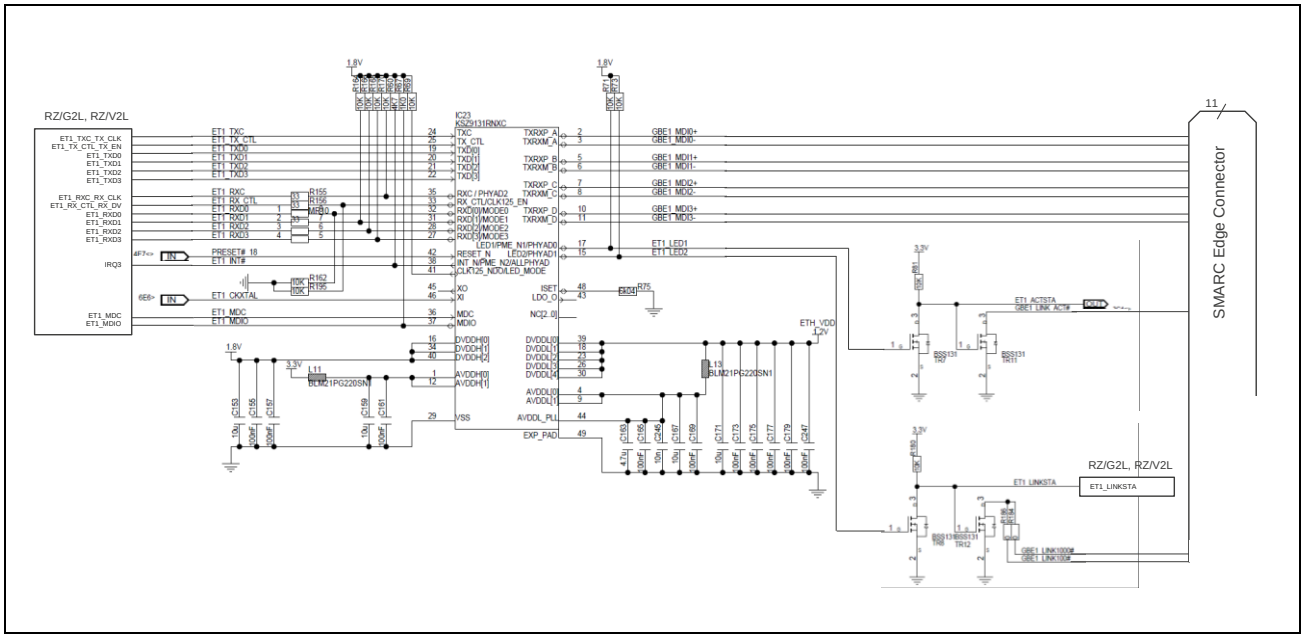

Figure 2.4 Block Diagram of Gigabit Ethernet1 I/F

2.5 ADC Interface

Figure 2.5 shows a block diagram of the ADC interface.

RTK9744L23C01000BE is implemented the 10-pin pin header for connection to the ADC interface. Six input channels can be used.

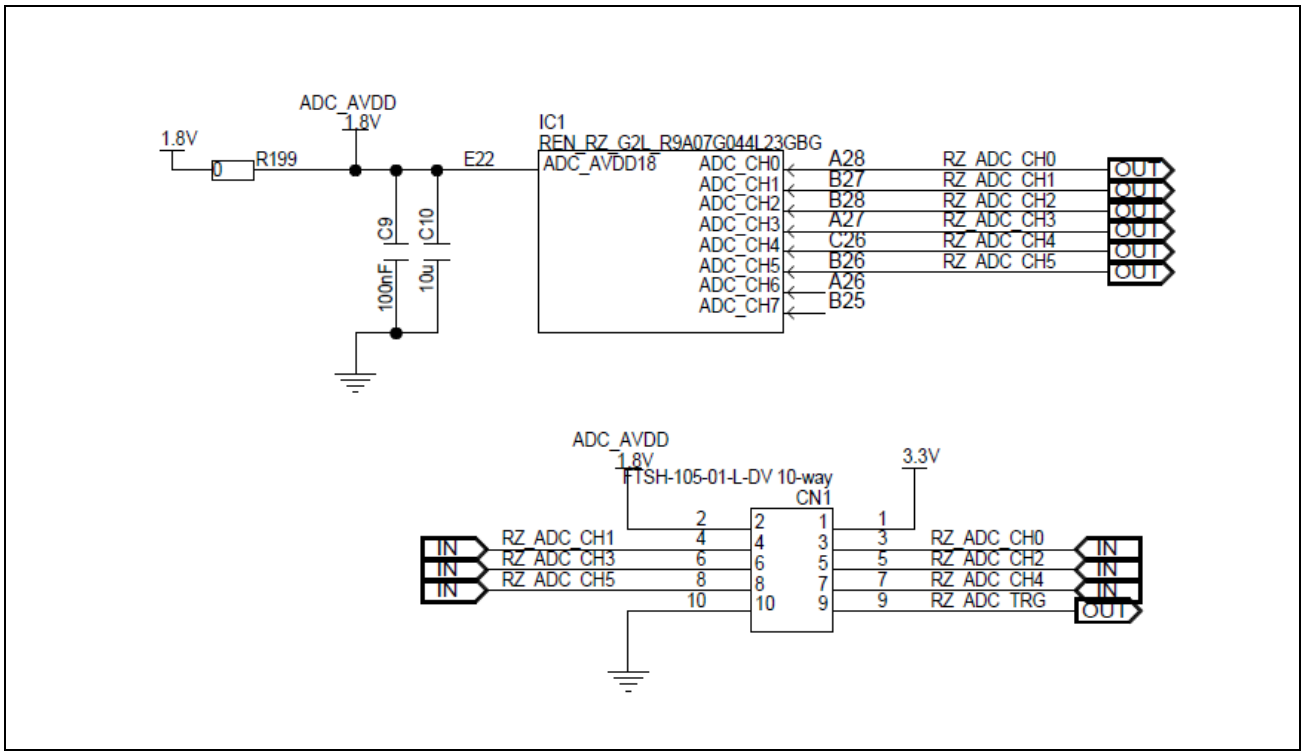

Figure 2.5 Block Diagram of ADC I/F

2.6 Clock Configuration

Figure 2.6 shows a block diagram of the Clock configuration.

NOTE

MIPI-DSI Interface supports operation up to Full HD, 60fps mode.

SD Interface supports UHS-I mode of 50MB/s (SDR50) and 104MB/s (SDR104).

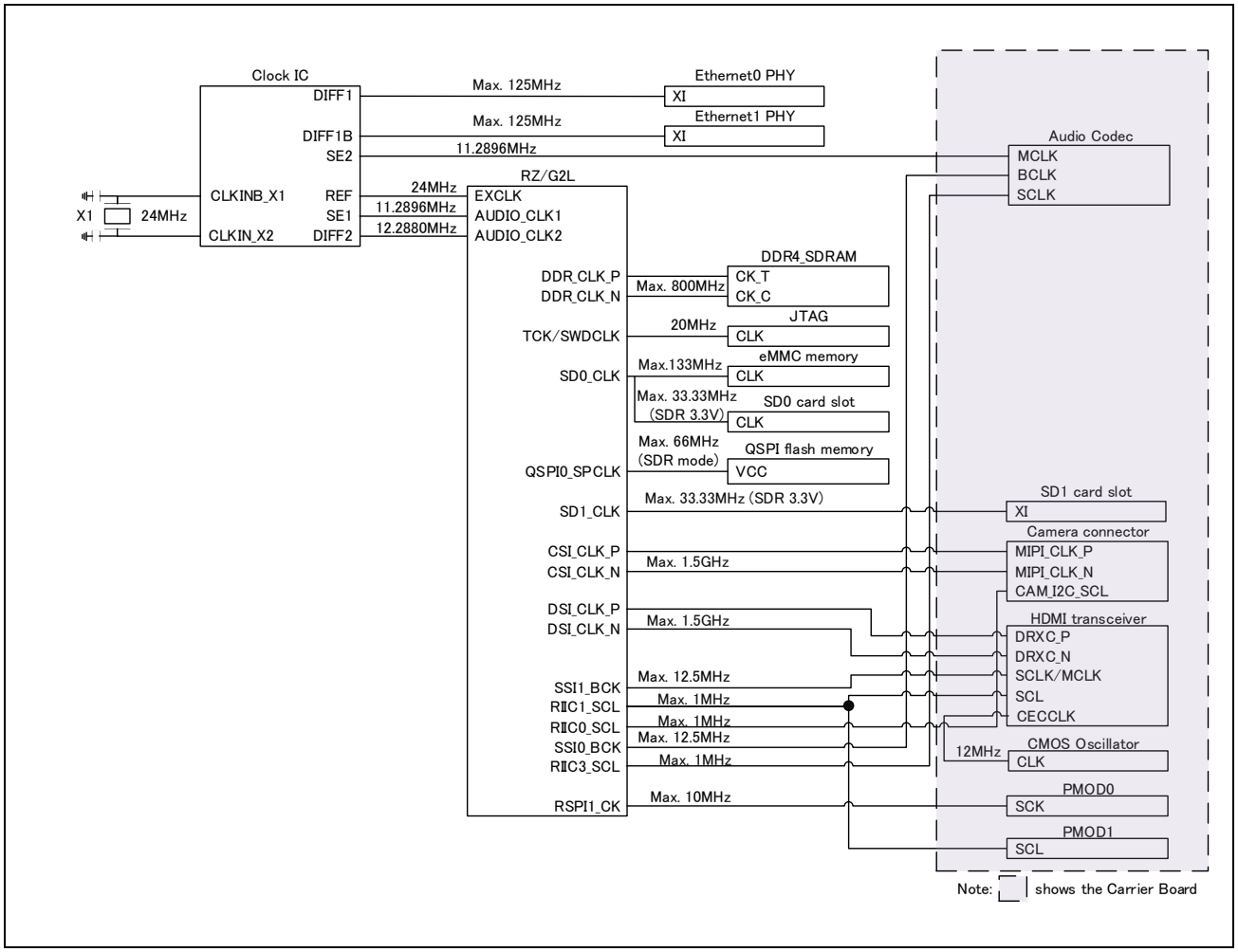

Figure 2.6 Block Diagram of Clock Configuration

2.7 Reset Control

Figure 2.7 shows block diagrams of a reset control for RTK9744L23S01000BE (Evaluation board Kit for RZ/G2L MPU).

For the RTK9744L23C01000BE, the interfaces of DDR4 SDRAM, QSPI flash memory, eMMC memory, Ethernet and Debug are controlled by reset signal from the PMIC.

There are two types of system resets: power-on reset and reset by the button switch.

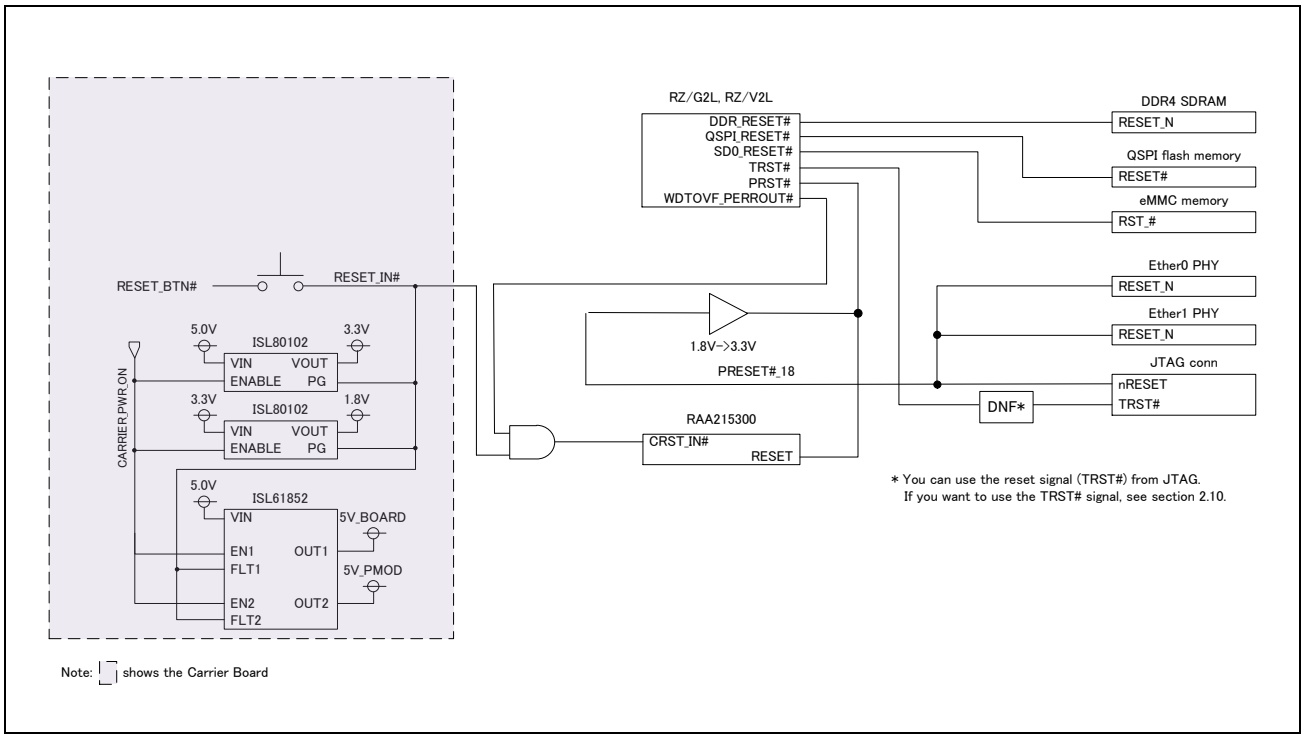

Figure 2.7 Block Diagram of Reset Control

2.8 Power Supply Configuration

Figure 2.8 shows a block diagram of power configuration for RTK9744L23S01000BE (Evaluation board Kit for RZ/G2L MPU).

This board has one USB Type-C receptacle for power input with USB Power Delivery. The input voltage of VBUS can be selected between 5V and 9V.

The default setting for controlling the input voltage level is 5V (max 3A input) with SW11-4 is turned on. When the switch is turned off, the input voltage is 9V (max 3A input). Only when RTK9744L23S01000BE is connected to external devices that requires a lot of power and is expected to run out of power, the SW 11-4 is turned off.

The 5V power supply is supplied to the PMIC installed in RTK9744L23C01000BE, and the PMIC generates the power supply voltage for each interface.

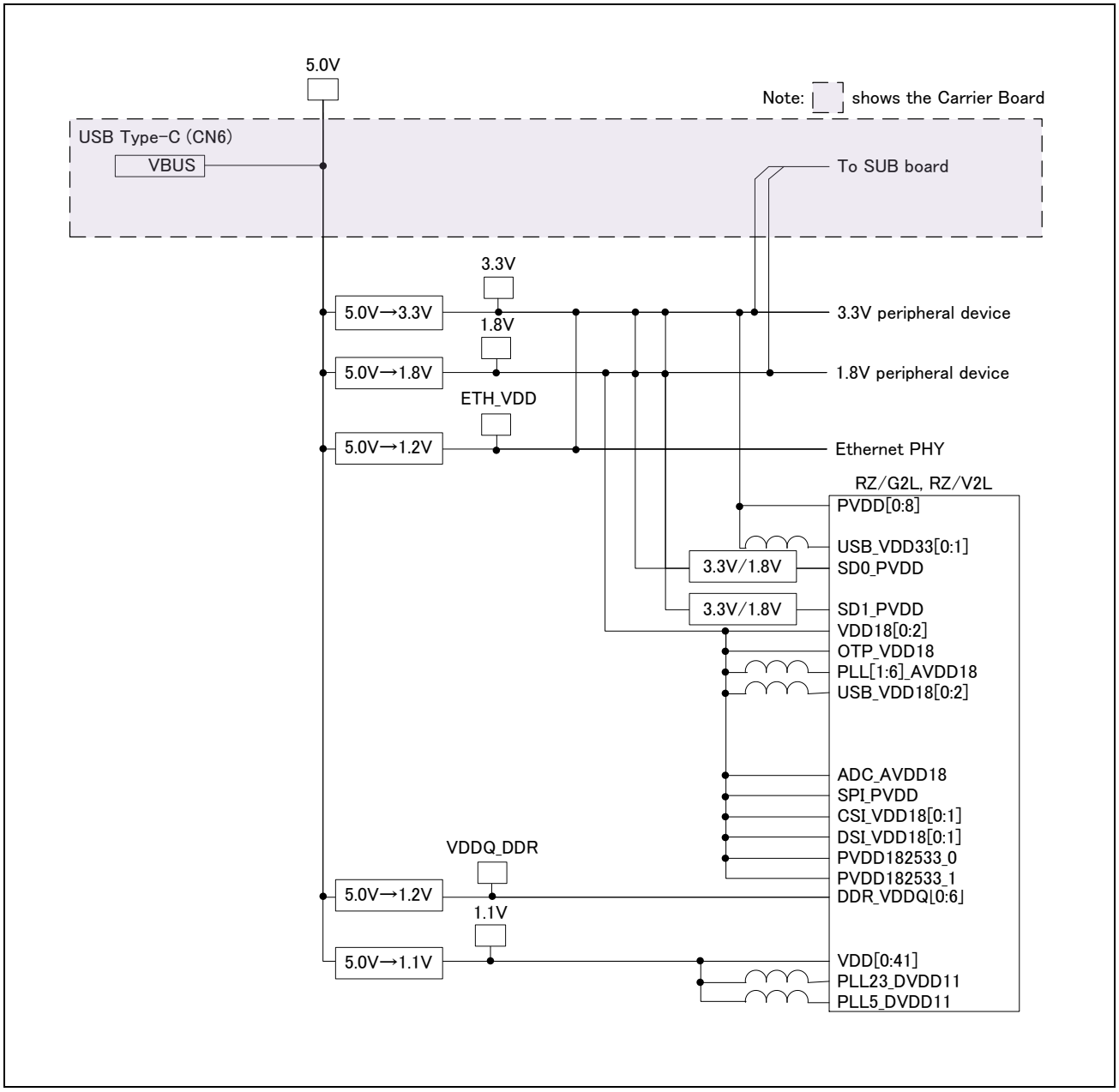

Figure 2.8 Block Diagram of Power Configuration

Figure 2.9 shows block diagrams of power regulation for the RTK9744L23C01000BE.

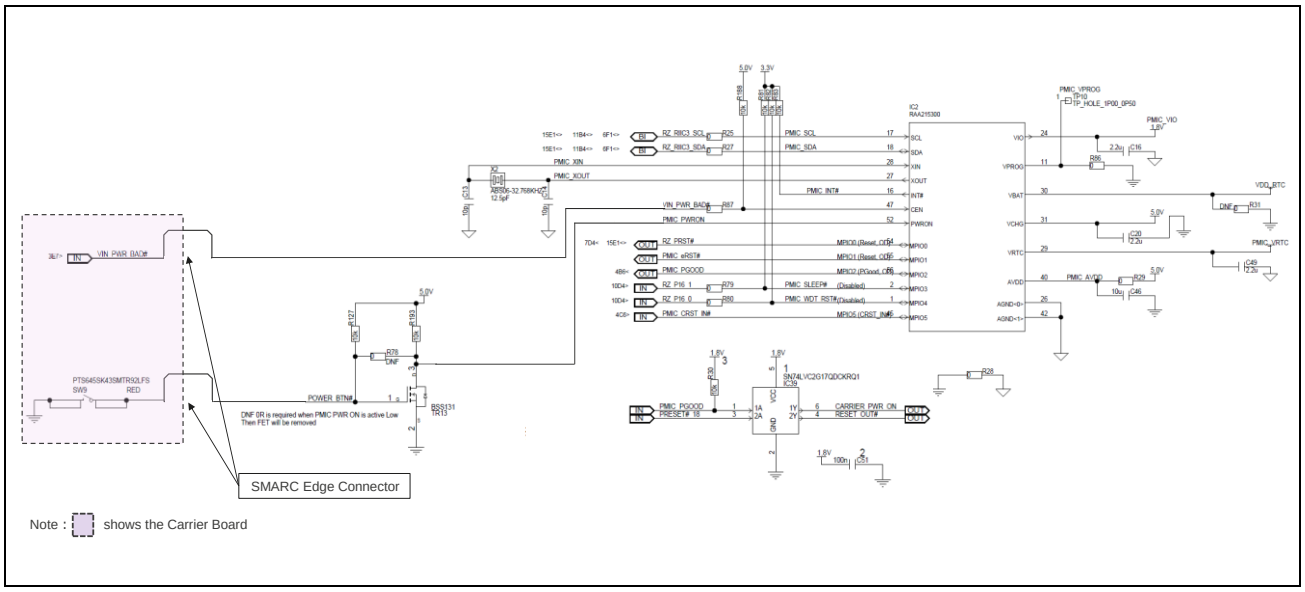

Figure 2.9 Block Diagrams of Power Regulation

2.9 PMIC

Figure 2.10 shows the RZ/G2L pin assignment for PMIC.

LDO1 and LDO2 output voltage value are fixed by P39_0 and P39_1.

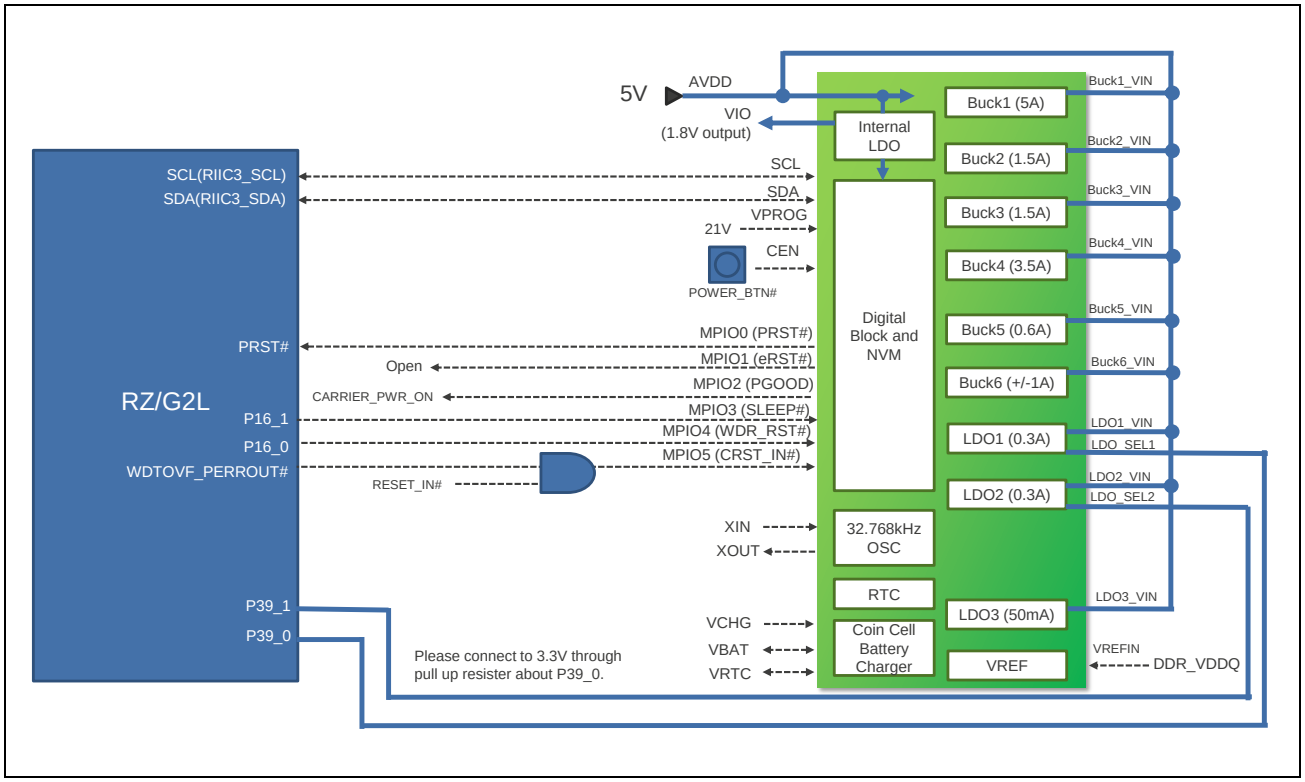

Figure 2.10 Block Diagram around PMIC

2.10 Debug Interface

Figure 2.11 shows a block diagram of debug interface.

This interface supports JTAG and SWD and has debug support for Cortex-A55 and Cortex-M33.

The default operation for the debug interface uses pin 9 as a ground detect, although with resitor (R20) fitting options, it is possible to use this to independently drive the JTAG_TRST#.

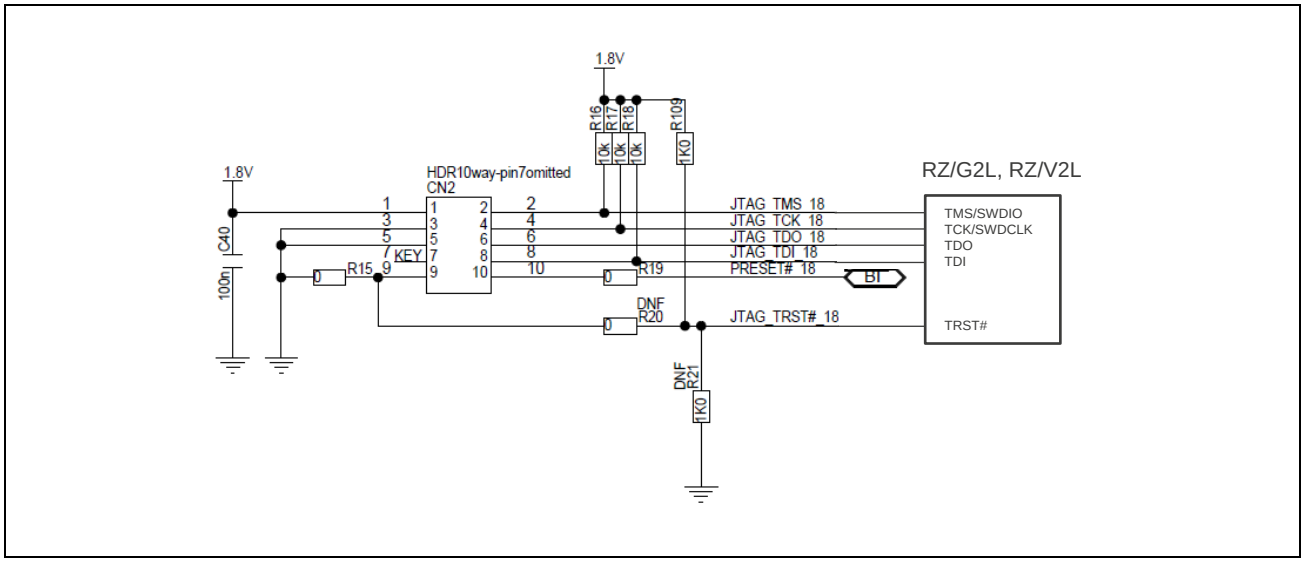

Figure 2.11 Block Diagram of Debug I/F

2.11 SD/MMC Host Interface

2.11.1 eMMC Memory

Figure 2.12 shows a block diagram of the MMC interface.

The eMMC memory is connected to channel0 of SD/MMC interface that is with built-in to the RZ/G2L. This memory is used in conjunction with SD card.

The eMMC memory may be used when

- the SW_SD0_DEV_SEL is enabled (SW1-2: Selection SD/MMC is OFF).

This interface complies with the JEDEC standard version 4.51 and supports HS200 mode.

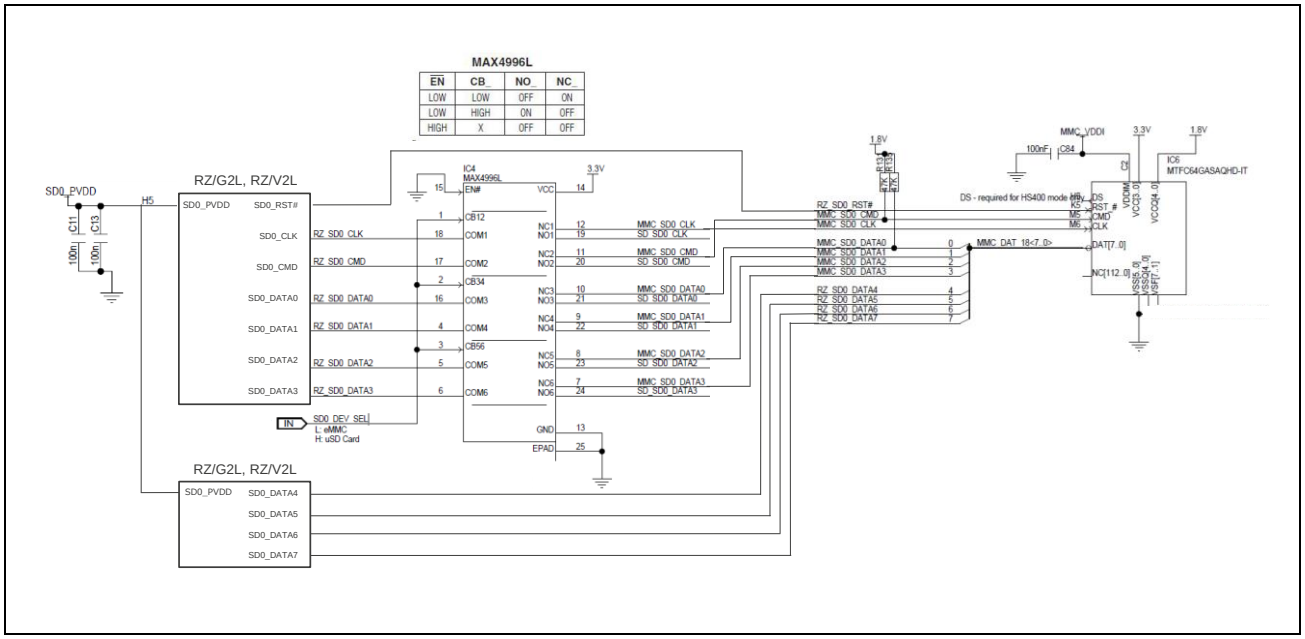

Figure 2.12 Block Diagram of eMMC I/F

2.11.2 SD Card

Figure 2.13 shows a block diagram of the SDHI interface.

The microSD card is connected to channel0 of SD/MMC interface that is with built-in to the RZ/G2L. This memory is used in conjunction with eMMC memory.

The microSD card may be used when

- the microSD is the selected boot mode (SW11-1: ON, SW11-2: ON, SW11-3: OFF)
- the SW_SD0_DEV_SEL is disabled (SW1-2: Selection SD/MMC is ON) and eMMC memory is not the selected boot mode (SW11-1: ON, SW11-2: OFF, SW11-3: OFF).

This interface complies with the memory card standard version 3.0 and supports UHS-I mode of 50MB/s (SDR50) and 104MB/s (SDR104).

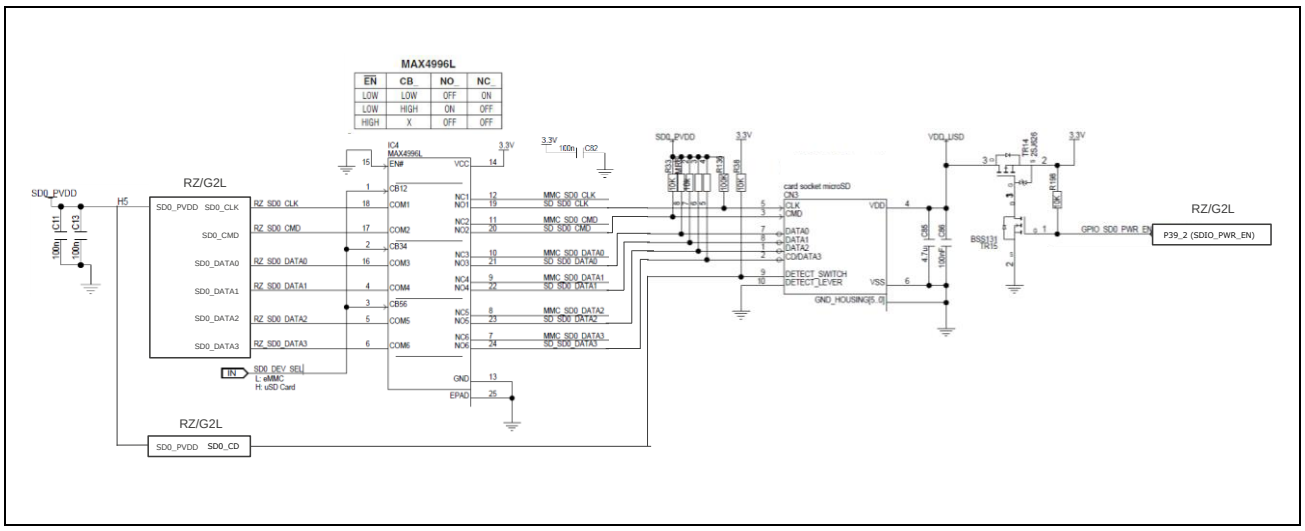

Figure 2.13 Block Diagram of SDHI I/F

3. Operation Specifications

3.1 Overview of Connectors

Figure 3.1 Illustrates the layout of connectors of the RTK9744L23C01000BE.

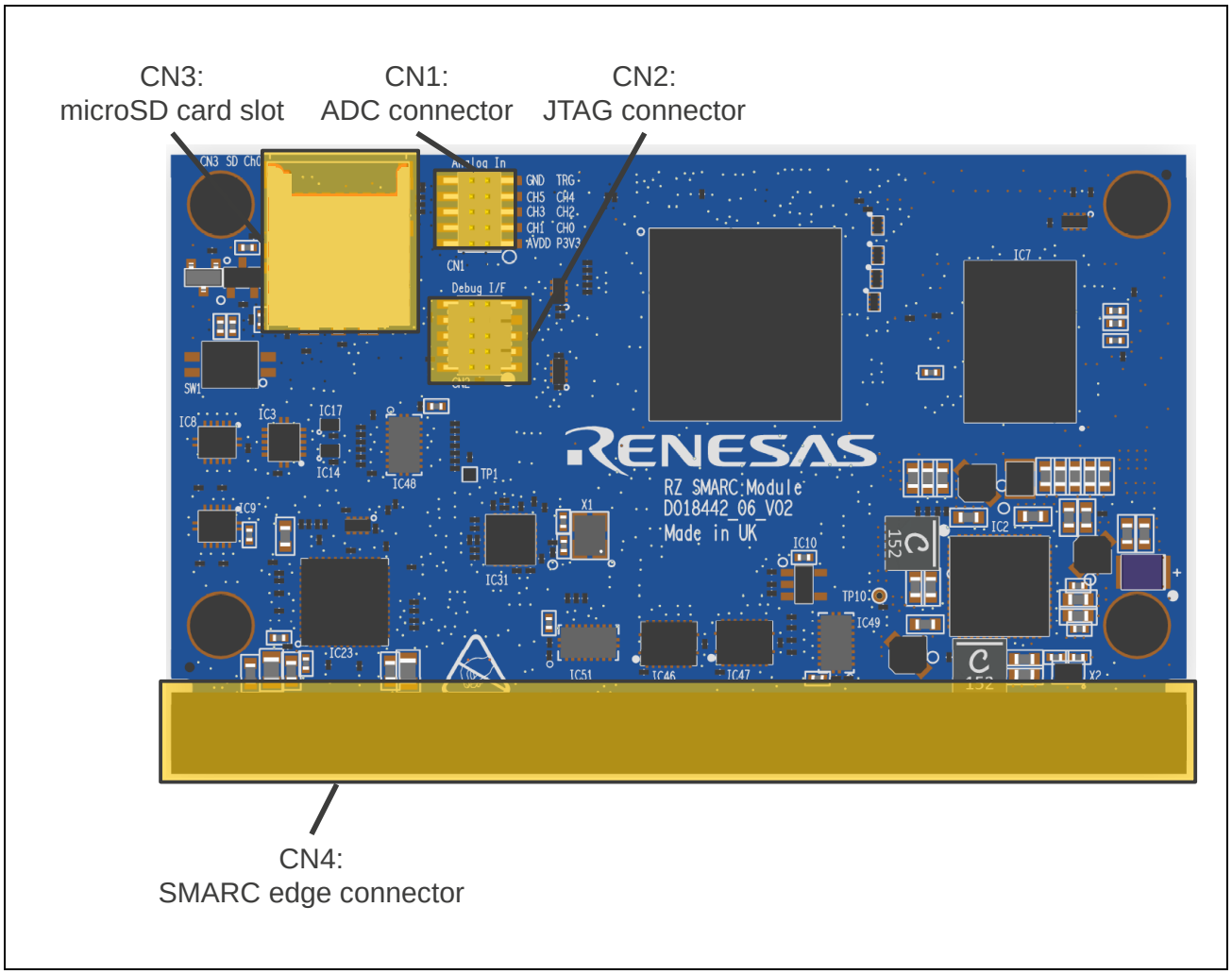

Figure 3.1 Layout of connectors of the RTK9744L23C01000BE (Top side)

3.1.1 ADC Connector (CN1)

RTK9744L23C01000BE contains a connector of ADC interface (CN1).

Figure 3.2 illustrates the layout of connector pins. **Table 3.1** shows the assignment of connector pins.

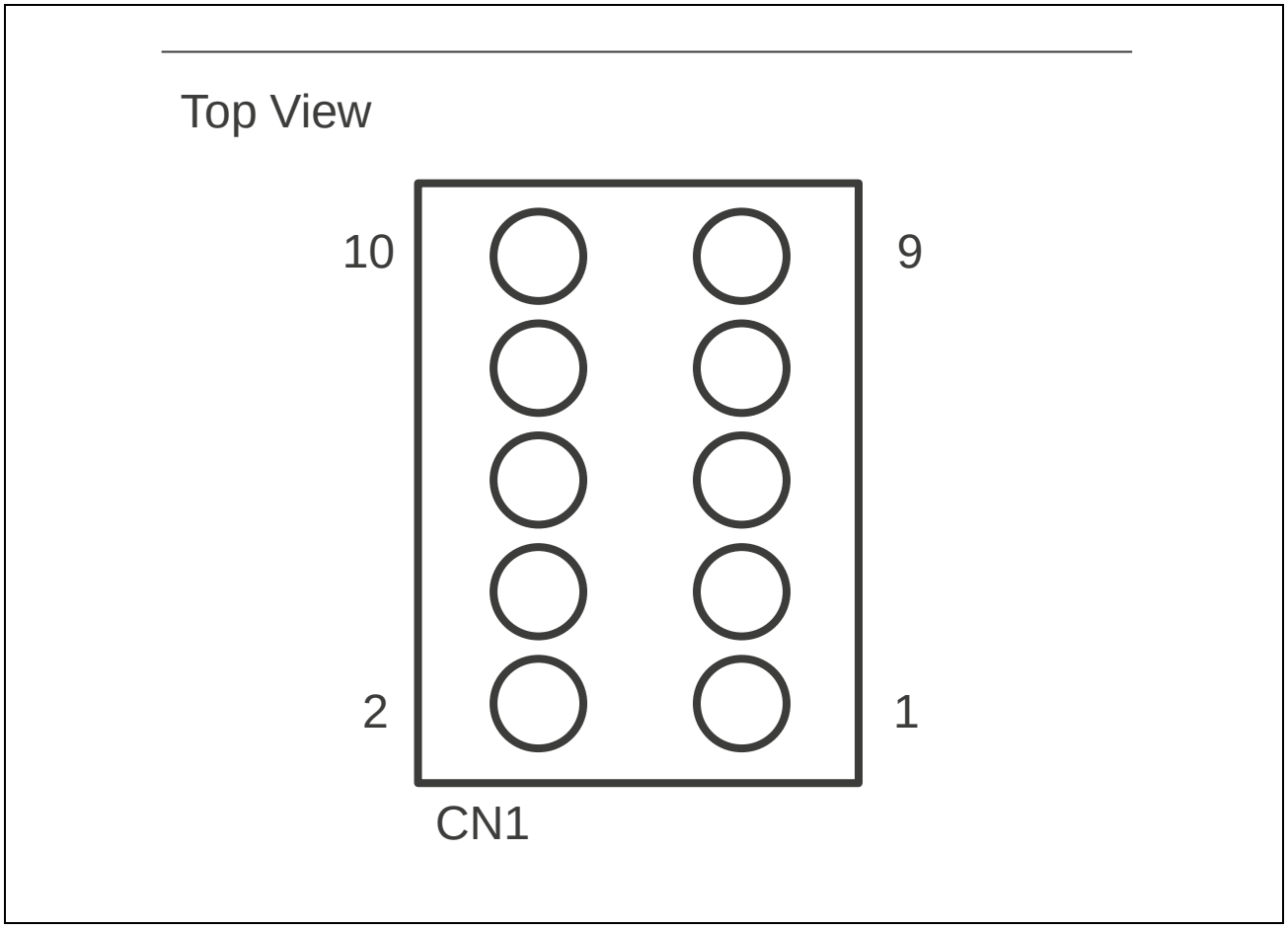

Figure 3.2 ADC Connector (CN1) Pin Layout Diagram

Table 3.1 ADC Connector (CN1) Pin Layout Table

Pin	Signal Name
1	PVDD
2	ADC_AVDD18
3	ADC_CH0
4	ADC_CH1
5	ADC_CH2
6	ADC_CH3
7	ADC_CH4
8	ADC_CH5
9	ADC_TRG
10	VSS

3.1.2 JTAG Connector (CN2)

RTK9744L23C01000BE contains a connector of debug interface (CN2).

Figure 3.3 illustrates the layout of connector pins. **Table 3.2** shows the assignment of connector pins.

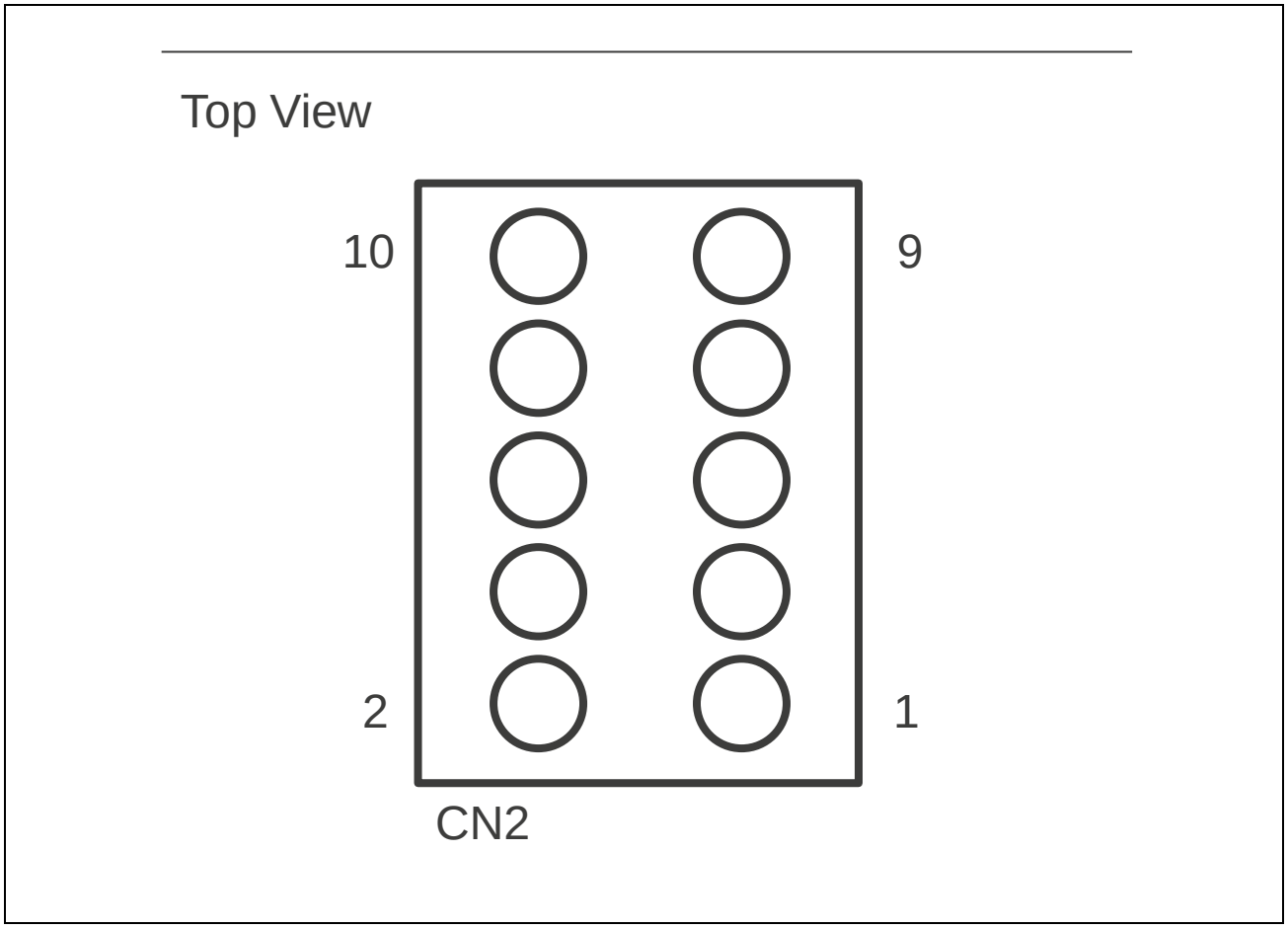

Figure 3.3 JTAG Connector (CN2) Pin Layout Diagram

Table 3.2 JTAG Connector (CN2) Pin Layout Table

Pin	Signal Name
1	PVDD18
2	TMS/SWDIO
3	VSS
4	TCK/SWDCLK
5	VSS
6	TDO
7	—
8	TDI
9	VSS
10	TRST#

3.1.3 MicroSD Card Slot (CN3)

RTK9744L23C01000BE contains a microSD card slot (CN3).

Figure 3.4 illustrates the layout of microSD card slot pins. **Table 3.3** shows the assignment of microSD card slot pins.

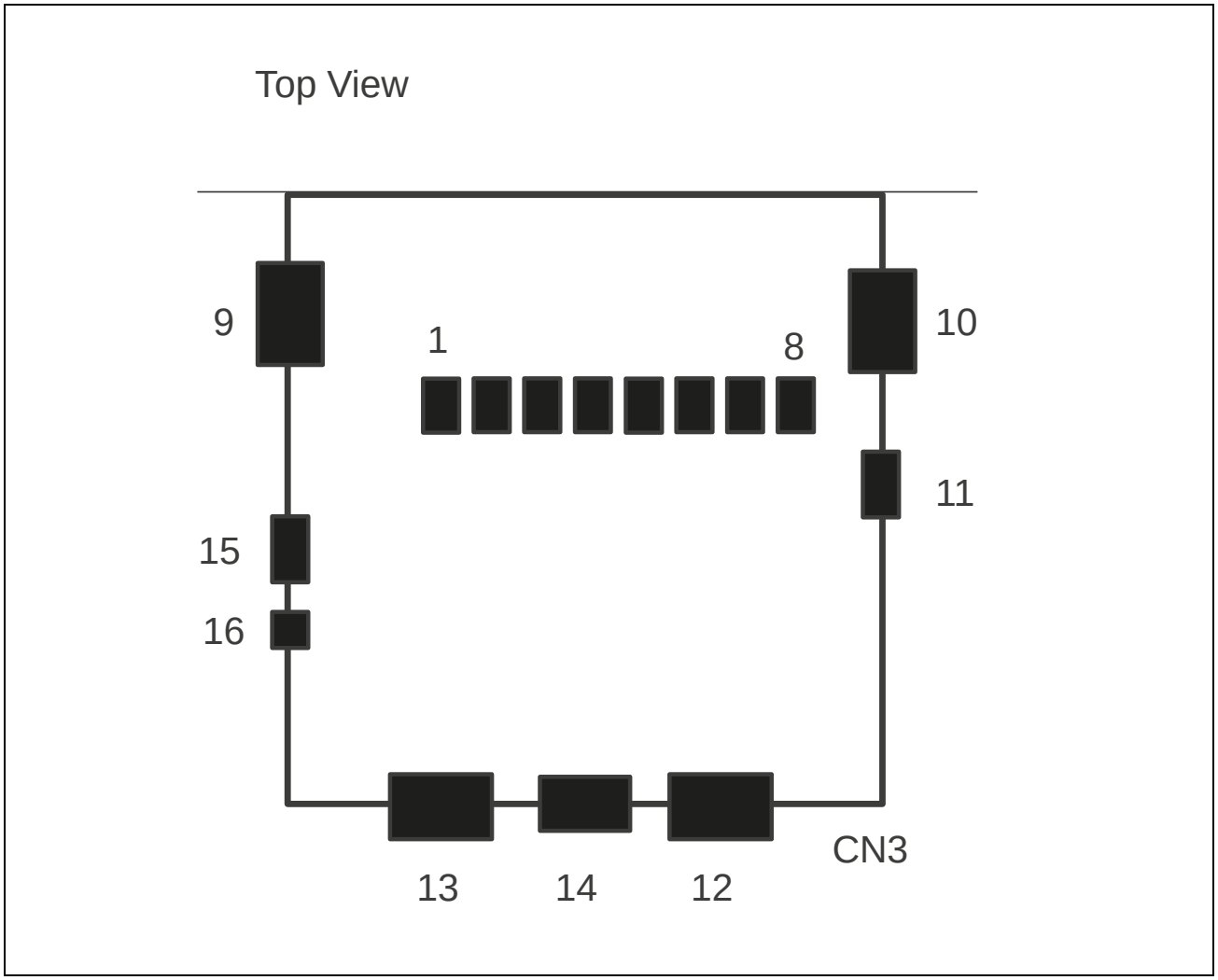

Figure 3.4 microSD Card Slot (CN3) Pin Layout Diagram

Table 3.3 microSD Card Slot (CN3) Pin Layout Table

Pin	Signal Name
1	SD0_DATA2
2	CD/SD0_DATA3
3	SD0_CMD
4	SD0_PVDD
5	SD0_CLK
6	VSS
7	SD0_DATA0
8	SD0_DATA1
9	DETECT_SWITCH
10	DETECT_LEVER

3.1.4 SMARC edge Connector (CN4)

RTK9744L23C01000BE can be connected to an external expansion board through the Carrier board connecting connector (CN4).

Figure 3.5 illustrates the layout of Carrier board connecting connector pins. For the assignment of Carrier board connecting connector pins, please refer to the section4 “MODULE PIN-OUT MAP” of the document “SMARC module 2.1 Specification (sget.org)”.

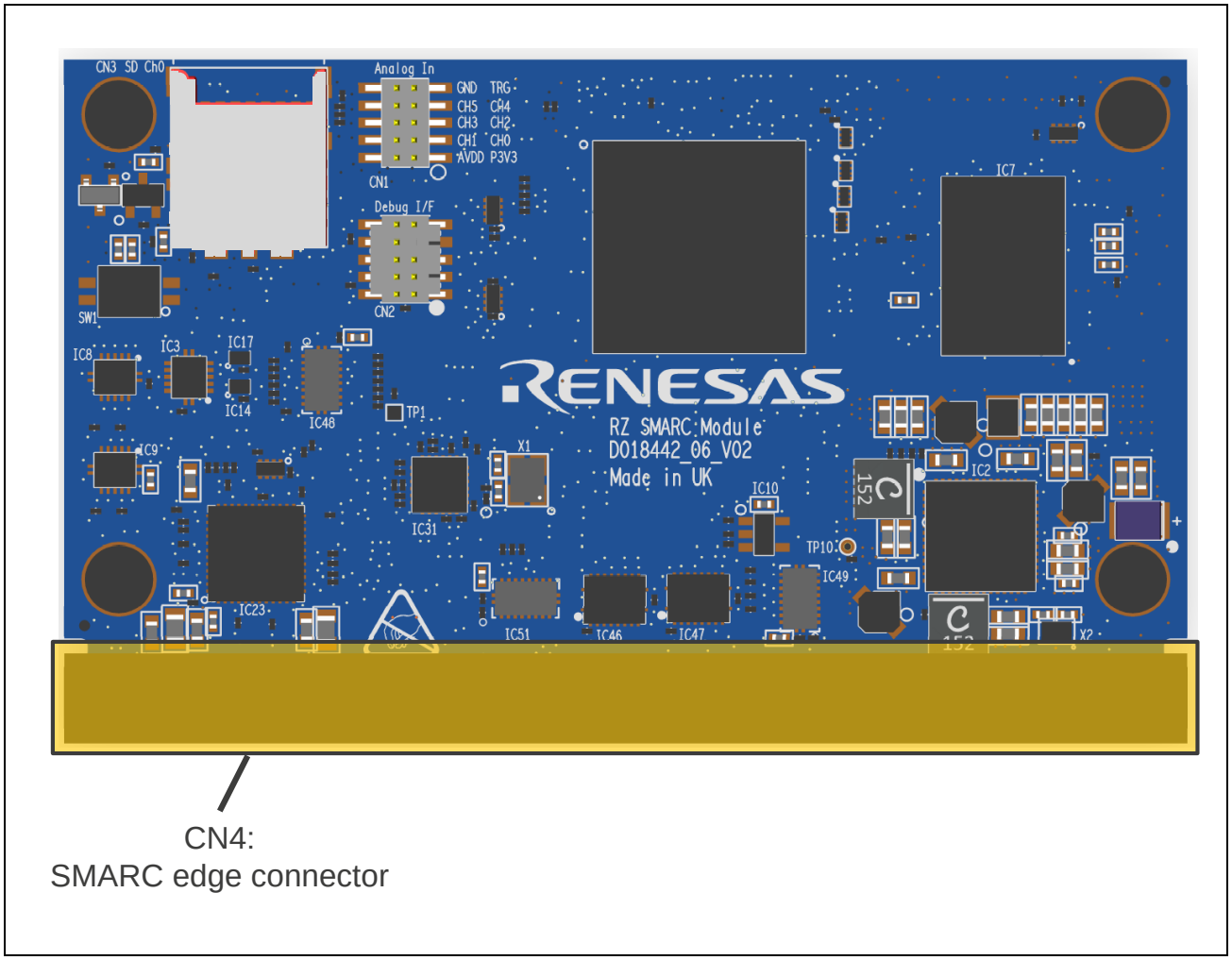

Figure 3.5 Layout of Carrier Board Connecting Pins

3.2 Layout of Operation Components

Figure 3.6 illustrates the layout of operation components of the RTK9744L23C01000BE.

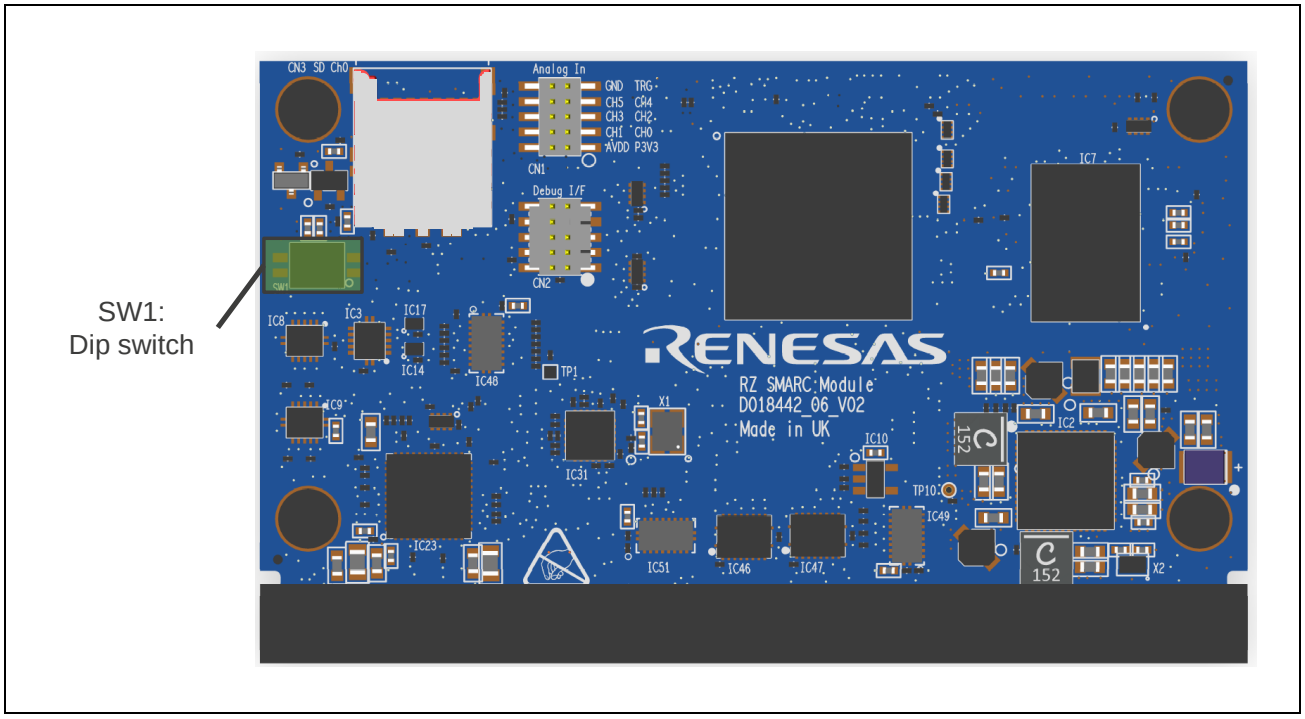

Figure 3.6 Layout of Operation Components of the RTK9744L23C01000BE

3.2.1 Functions of Switches and Mode Terminals

RTK9744L23C01000BE contains one switch.

Table 3.4 lists mounted switches. **Figure 3.7** shows a block diagram of the System Setting interface.

Table 3.4 Switches Mounted on RTK9744L23C01000BE

No.	Function	Note
SW1	System setting DIP switch	For details, see **Table 3.5**

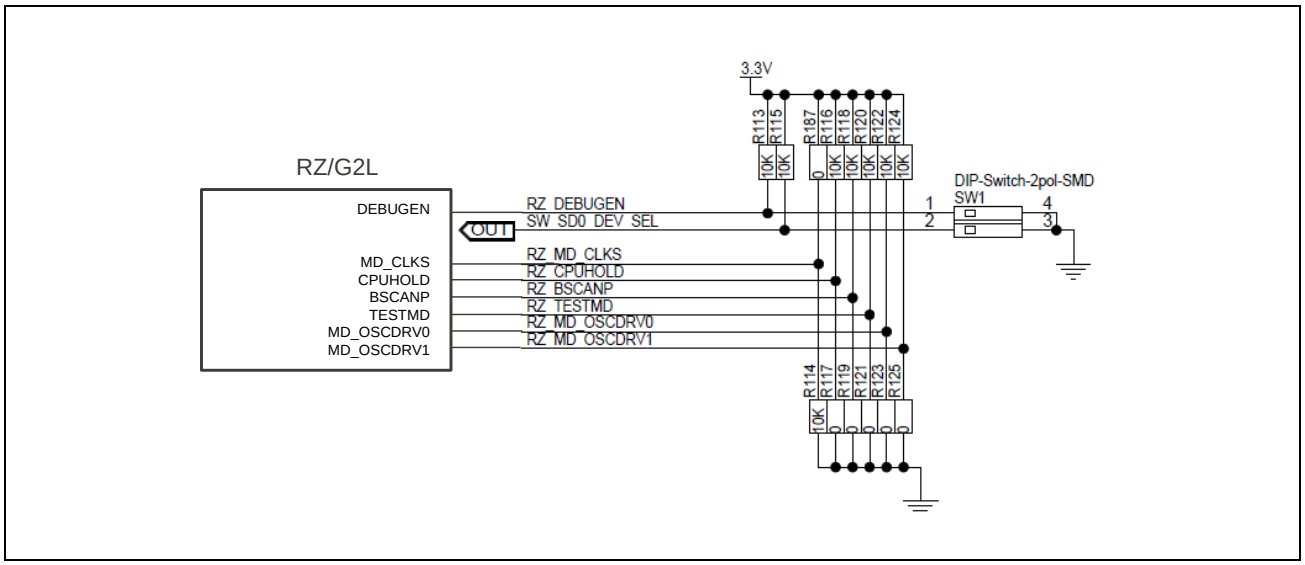

Figure 3.7 Block Diagram of System Setting I/F

Table 3.5 provides functions of the DIP switch and **Figure 3.8** indicates a default terminal state.

Table 3.5 Functions of System Setting DIP Switch (SW1)

No.	Setting		Function
SW1-1 DEBUGEN	OFF	DEBUGEN="H"	Debugging with debuggers for ARM
	ON	DEBUGEN="L"	Normal operation
SW1-2 Selection SD/MMC	OFF	Selection="H"	Select the eMMC memory
	ON	Selection="L"	Select the SD card

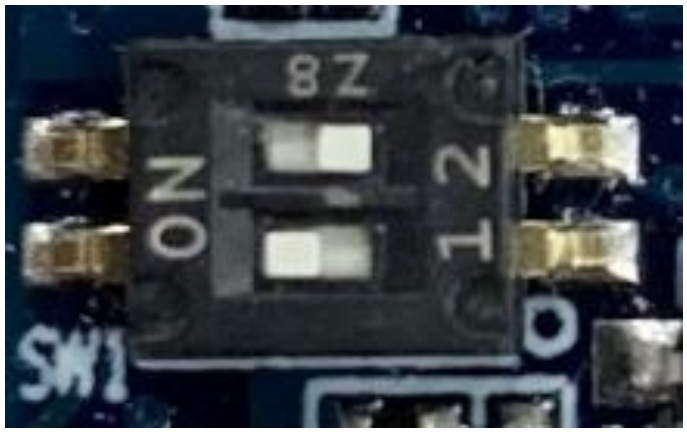

Figure 3.8 Default Setting of System Setting DIP Switch (SW1)

Table 3.6 provides functions of mode terminals.

Table 3.6 Functions of System Setting

No.	Setting		Function
MD_CLKS	0	MD_CLKS="H"	SSCG ON
	1	MD_CLKS="L"	SSCG OFF
BSCANP	0	BSCANP="H"	Select the eMMC memory
	1	BSCANP="L"	Select the SD card
MD_OSCDRV0	0	MD_OSCDRV0="H"	Not supported
	1	MD_OSCDRV0="L"	
MD_OSCDRV1	0	MD_OSCDRV1="H"	Not supported
	1	MD_OSCDRV1="L"	

4. Appendix

4.1 Type Name and Features of Each Board

This section describes the the type name and feature of each board here.

The SMARC Module Board is as follows. This picture is of the RTK9744L23C01000BE.



Figure 4.1 Top View of the SMARC Module Board

Please refer to the chapter 2 “Functional Specifications” onwards for the actual functions of the board.

Board Name	Type Name	MPU
RZ/G2L SMARC Module Board	RTK9744L23C01000BE	RZ/G2L (R9A07G044L23GBG)

The RZ SMARC Series Carrier Board is as follows. This picture is of the RTK97X4XXXB00000BE.



Figure 4.2 Top View of the RZ SMARC Series Carrier Board

Board Name	Type Name
RZ SMARC Series Carrier Board	RTK97X4XXXB00000BE

The Evaluation board Kit is as follows. This board consists of the SMARC Module Board and the RZ SMARC Series Carrier Board via a 314-pin 0.5-mm pitch connector. This picture is of the RTK9744L23S01000BE.

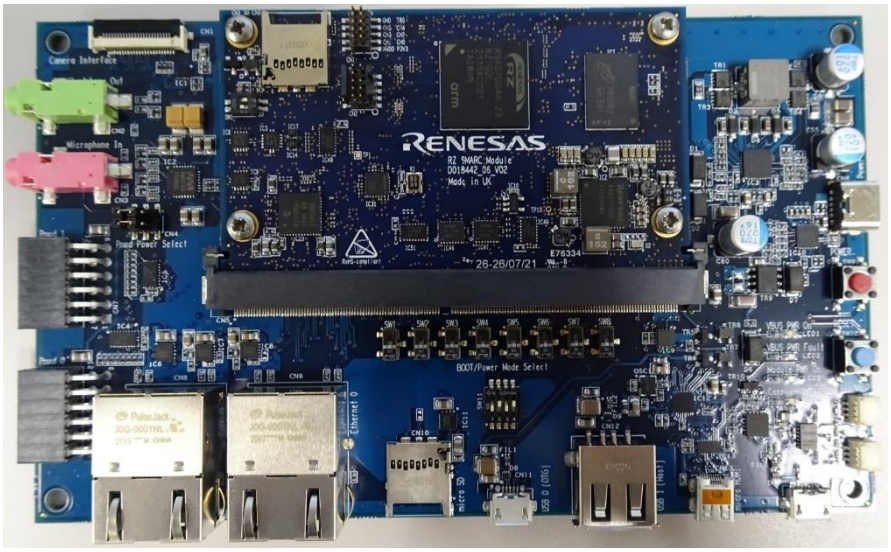

Figure 4.3 Top View of the Evaluation board Kit

The Evaluation board Kits are similarly designed to use a common board layout and to be pin-compatible.

Board Name	Type Name	MPU
Evaluation board Kit for RZ/G2L MPU	RTK9744L23S01000BE	RZ/G2L (R9A07G044L23GBG)

4.2 How to Identify Each SMARC Module Board

The differences between each SMARC Module Board are as follows. This picture is of the RTK9744L23C01000BE.

Table 4.1 Comparison of the RTK9744L23C01000BE and the RTK9754L23C01000BE

Type Name	RTK9744L23C01000BE	RTK9754L23C01000BE
IC1	RZ/G2L (R9A07G044L23GBG)	RZ/V2L (R9A07G054L23GBG)

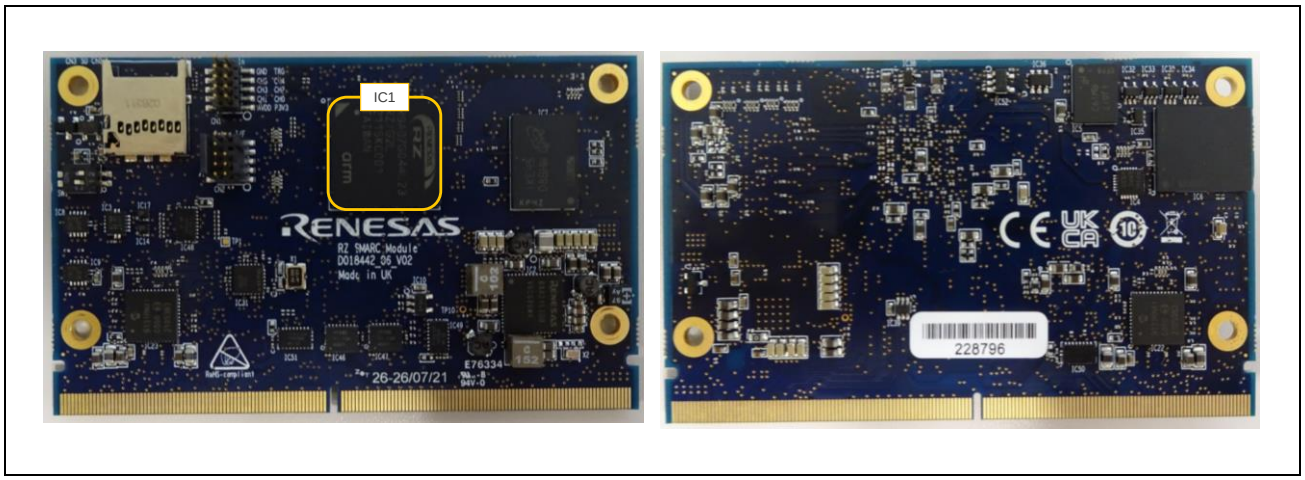

Figure 4.4 Comparison of Each SMARC Module Board

4.3 How to replace the SMARC Module Board

Please be careful when replacing the board as follows.

1. Remove the four screws.

NOTE

The screw thread is a special shape, so be careful not to crush the screw thread.

Please recommend to prepare a torx screwdriver which is a “T6” head size.

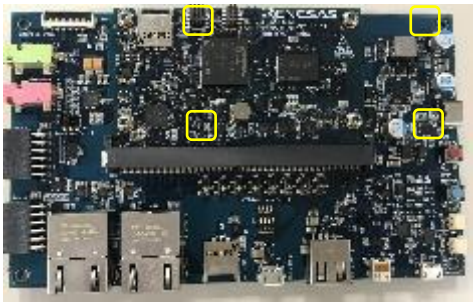



Specially shaped screw threads

Figure 4.5 How to remove the screws

2. Remove the screw and the SMARC Module Board will stand up at an angle. Slide it out.

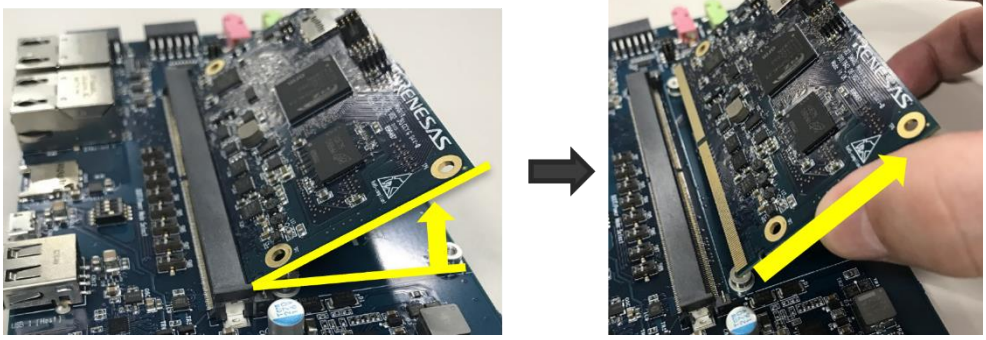

Figure 4.6 How to remove the SMARC Module Board

3. Insert the replacement the SMARC Module Board diagonally, then roll the board parallel to the RZ SMARC Series Carrier Board and fix it with screws.

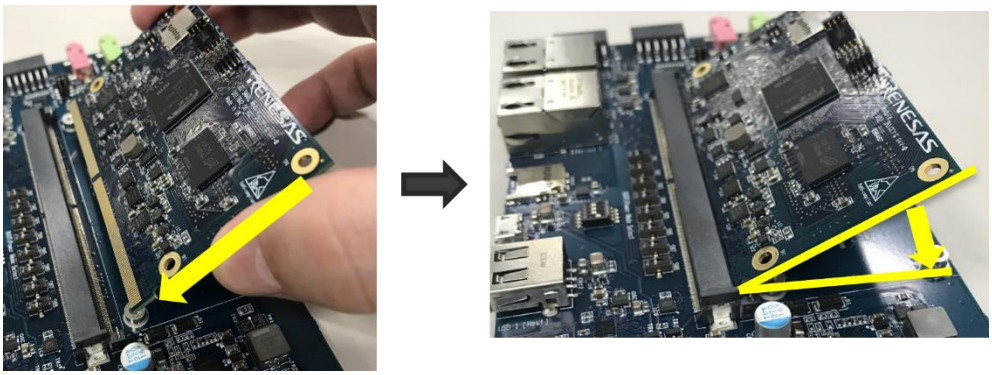

Figure 4.7 How to install the SMARC Module Board

REVISION HISTORY	RZ Family / RZ/G, RZ/V Series RZ/G2L, RZ/V2L SMARC Module Board

Rev.	Date	Description	
		Page	Summary
1.00	Sep 27, 2021	—	First edition issued
1.01	Oct 07, 2021	1	For front cover, it is changed the description from "RZ/G2L SMARC Module Board RTK9744L23C01000BE" to "RZ/G2L, RZ/V2L SMARC Module Board". It is changed the description from "RZ Family / RZ/G Series" to "RZ Family / RZ/G, RZ/V Series" It is added the description "RTK9754L23C01000BE".
		7	For Tytle, it is changed the description from "RZ Family / RZ/G Series RZ/G2L SMARC Module Board RTK9744L23C01000BE" to "RZ Family / RZ/G, RZ/V Series RZ/G2L, RZ/V2L SMARC Module Board". For section "Overview", it is added the description "To begin with, only RTK9744L23C01000BE will be explained here. The difference between RTK9744L23C01000BE and RTK9754L23C01000BE is that RTK9754L23C01000BE uses Renesas Electronics microprocessor RZ/V2L "R9A07G054L23GBG", which is pin-compatible with RZ/G2L. In other words, they are functionally the same".
		60	For Revision History, it is changed the description from "RZ Family / RZ/G Series RZ/G2L SMARC Module Board RTK9744L23C01000BE" to "RZ Family / RZ/G, RZ/V Series RZ/G2L, RZ/V2L SMARC Module Board".
		62	For back cover, it is changed the description from "RZ Family / RZ/G Series" to "RZ Family / RZ/G, RZ/V Series".
1.02	Apr 26, 2022	8, 11 to 14, 52 to 57	For each figure, the figure style has been improved.
		10	For section title, it is changed the description from "Outside View" to "Physical View". Figure 1.2 is modified.
		15	For Table 1.2 and Table 1.3, the Recommend Optional Parts is removed.
		40, 42, 49 to 51	For each interface, the description is added.
		41	For DDR4 SDRAM, the description is added. For Figure 2.2, the pin swap is modified.
		60 to 64	Section 4 Appendix is added.
1.10	Dec 09, 2022	23, 39	Restrictions on use are added. When used in combination with the RZ SMARC Series Carrier Board (P/N: RTR97X4XXXB00000BE), CAN0 and CAN1 interface cannot be used because a CAN transceiver is not fitted on the RTK97X4XXXB00000BE.
1.20	Apr 03, 2024	18 to 34	For section 2.2.2 "List of Pin Functions", the pin names, pin functions, and descriptions in the table are modified.
		34	Restrictions on use are modified. The CAN connector is implemented on the RZ SMARC Series Carrier Board (P/N: RTK97X4XXXB00000BE), but the CAN-FD interface cannot be used because a CAN transceiver is not fitted. The following carrier boards are equipped with a CAN transceiver and the CAN-FD interface is available already. S.LOT# in the outer box label: 000251812 or later S.LOT# label on the carrier board: 251812 or later
		37	For section 2.4 "Gigabit Ethernet Interface", the figures are modified.
		40	For section 2.7 "Reset Control", the figure is modified.
		41	For section 2.8 "Power Supply Configuration", the figure is modified.
		43	For section 2.9 "PMIC", the figure is modified
		44	For section 2.10 "Debug Interface", the figure is modified.
		45	For section 2.11.1 "eMMC Memory", the figure is modified.

RZ Family / RZ/G, RZ/V Series User's Manual: Hardware

Publication Date: Rev.1.00 Sep 27, 2021
Rev.1.20 Apr 03, 2024

Published by: Renesas Electronics Corporation

RZ Family / RZ/G, RZ/V Series

Renesas Electronics Corporation

R01UH0964EJ0120