User's Manual

8

78K0/Kx2

User's Manual: Hardware

8-Bit Single-Chip Microcontrollers

All information contained in these materials, including products and product specifications, represents information on the product at the time of publication and is subject to change by Renesas Electronics Corp. without notice. Please review the latest information published by Renesas Electronics Corp. through various means, including the Renesas Electronics Corp. website (http://www.renesas.com).

Renesas Electronics
www.renesas.com

Rev.4.01 Jul 2010

Notice

1. All information included in this document is current as of the date this document is issued. Such information, however, is subject to change without any prior notice. Before purchasing or using any Renesas Electronics products listed herein, please confirm the latest product information with a Renesas Electronics sales office. Also, please pay regular and careful attention to additional and different information to be disclosed by Renesas Electronics such as that disclosed through our website.
2. Renesas Electronics does not assume any liability for infringement of patents, copyrights, or other intellectual property rights of third parties by or arising from the use of Renesas Electronics products or technical information described in this document. No license, express, implied or otherwise, is granted hereby under any patents, copyrights or other intellectual property rights of Renesas Electronics or others.
3. You should not alter, modify, copy, or otherwise misappropriate any Renesas Electronics product, whether in whole or in part.
4. Descriptions of circuits, software and other related information in this document are provided only to illustrate the operation of semiconductor products and application examples. You are fully responsible for the incorporation of these circuits, software, and information in the design of your equipment. Renesas Electronics assumes no responsibility for any losses incurred by you or third parties arising from the use of these circuits, software, or information.
5. When exporting the products or technology described in this document, you should comply with the applicable export control laws and regulations and follow the procedures required by such laws and regulations. You should not use Renesas Electronics products or the technology described in this document for any purpose relating to military applications or use by the military, including but not limited to the development of weapons of mass destruction. Renesas Electronics products and technology may not be used for or incorporated into any products or systems whose manufacture, use, or sale is prohibited under any applicable domestic or foreign laws or regulations.
6. Renesas Electronics has used reasonable care in preparing the information included in this document, but Renesas Electronics does not warrant that such information is error free. Renesas Electronics assumes no liability whatsoever for any damages incurred by you resulting from errors in or omissions from the information included herein.
7. Renesas Electronics products are classified according to the following three quality grades: "Standard", "High Quality", and "Specific". The recommended applications for each Renesas Electronics product depends on the product's quality grade, as indicated below. You must check the quality grade of each Renesas Electronics product before using it in a particular application. You may not use any Renesas Electronics product for any application categorized as "Specific" without the prior written consent of Renesas Electronics. Further, you may not use any Renesas Electronics product for any application for which it is not intended without the prior written consent of Renesas Electronics. Renesas Electronics shall not be in any way liable for any damages or losses incurred by you or third parties arising from the use of any Renesas Electronics product for an application categorized as "Specific" or for which the product is not intended where you have failed to obtain the prior written consent of Renesas Electronics. The quality grade of each Renesas Electronics product is "Standard" unless otherwise expressly specified in a Renesas Electronics data sheets or data books, etc.

   "Standard": Computers; office equipment; communications equipment; test and measurement equipment; audio and visual equipment; home electronic appliances; machine tools; personal electronic equipment; and industrial robots.

   "High Quality": Transportation equipment (automobiles, trains, ships, etc.); traffic control systems; anti-disaster systems; anti-crime systems; safety equipment; and medical equipment not specifically designed for life support.

   "Specific": Aircraft; aerospace equipment; submersible repeaters; nuclear reactor control systems; medical equipment or systems for life support (e.g. artificial life support devices or systems), surgical implantations, or healthcare intervention (e.g. excision, etc.), and any other applications or purposes that pose a direct threat to human life.
8. You should use the Renesas Electronics products described in this document within the range specified by Renesas Electronics, especially with respect to the maximum rating, operating supply voltage range, movement power voltage range, heat radiation characteristics, installation and other product characteristics. Renesas Electronics shall have no liability for malfunctions or damages arising out of the use of Renesas Electronics products beyond such specified ranges.
9. Although Renesas Electronics endeavors to improve the quality and reliability of its products, semiconductor products have specific characteristics such as the occurrence of failure at a certain rate and malfunctions under certain use conditions. Further, Renesas Electronics products are not subject to radiation resistance design. Please be sure to implement safety measures to guard them against the possibility of physical injury, and injury or damage caused by fire in the event of the failure of a Renesas Electronics product, such as safety design for hardware and software including but not limited to redundancy, fire control and malfunction prevention, appropriate treatment for aging degradation or any other appropriate measures. Because the evaluation of microcomputer software alone is very difficult, please evaluate the safety of the final products or system manufactured by you.
10. Please contact a Renesas Electronics sales office for details as to environmental matters such as the environmental compatibility of each Renesas Electronics product. Please use Renesas Electronics products in compliance with all applicable laws and regulations that regulate the inclusion or use of controlled substances, including without limitation, the EU RoHS Directive. Renesas Electronics assumes no liability for damages or losses occurring as a result of your noncompliance with applicable laws and regulations.
11. This document may not be reproduced or duplicated, in any form, in whole or in part, without prior written consent of Renesas Electronics.
12. Please contact a Renesas Electronics sales office if you have any questions regarding the information contained in this document or Renesas Electronics products, or if you have any other inquiries.

(Note 1) "Renesas Electronics" as used in this document means Renesas Electronics Corporation and also includes its majority-owned subsidiaries.

(Note 2) "Renesas Electronics product(s)" means any product developed or manufactured by or for Renesas Electronics.

NOTES FOR CMOS DEVICES

(1) VOLTAGE APPLICATION WAVEFORM AT INPUT PIN: Waveform distortion due to input noise or a reflected wave may cause malfunction. If the input of the CMOS device stays in the area between VIL (MAX) and VIH (MIN) due to noise, etc., the device may malfunction. Take care to prevent chattering noise from entering the device when the input level is fixed, and also in the transition period when the input level passes through the area between VIL (MAX) and VIH (MIN).

(2) HANDLING OF UNUSED INPUT PINS: Unconnected CMOS device inputs can be cause of malfunction. If an input pin is unconnected, it is possible that an internal input level may be generated due to noise, etc., causing malfunction. CMOS devices behave differently than Bipolar or NMOS devices. Input levels of CMOS devices must be fixed high or low by using pull-up or pull-down circuitry. Each unused pin should be connected to VDD or GND via a resistor if there is a possibility that it will be an output pin. All handling related to unused pins must be judged separately for each device and according to related specifications governing the device.

(3) PRECAUTION AGAINST ESD: A strong electric field, when exposed to a MOS device, can cause destruction of the gate oxide and ultimately degrade the device operation. Steps must be taken to stop generation of static electricity as much as possible, and quickly dissipate it when it has occurred. Environmental control must be adequate. When it is dry, a humidifier should be used. It is recommended to avoid using insulators that easily build up static electricity. Semiconductor devices must be stored and transported in an anti-static container, static shielding bag or conductive material. All test and measurement tools including work benches and floors should be grounded. The operator should be grounded using a wrist strap. Semiconductor devices must not be touched with bare hands. Similar precautions need to be taken for PW boards with mounted semiconductor devices.

(4) STATUS BEFORE INITIALIZATION: Power-on does not necessarily define the initial status of a MOS device. Immediately after the power source is turned ON, devices with reset functions have not yet been initialized. Hence, power-on does not guarantee output pin levels, I/O settings or contents of registers. A device is not initialized until the reset signal is received. A reset operation must be executed immediately after power-on for devices with reset functions.

(5) POWER ON/OFF SEQUENCE: In the case of a device that uses different power supplies for the internal operation and external interface, as a rule, switch on the external power supply after switching on the internal power supply. When switching the power supply off, as a rule, switch off the external power supply and then the internal power supply. Use of the reverse power on/off sequences may result in the application of an overvoltage to the internal elements of the device, causing malfunction and degradation of internal elements due to the passage of an abnormal current. The correct power on/off sequence must be judged separately for each device and according to related specifications governing the device.

(6) INPUT OF SIGNAL DURING POWER OFF STATE : Do not input signals or an I/O pull-up power supply while the device is not powered. The current injection that results from input of such a signal or I/O pull-up power supply may cause malfunction and the abnormal current that passes in the device at this time may cause degradation of internal elements. Input of signals during the power off state must be judged separately for each device and according to related specifications governing the device.

How to Use This Manual

Readers This manual is intended for user engineers who wish to understand the functions of the 78K0/Kx2 microcontrollers and design and develop application systems and programs for these devices.
The target products are as follows.

	Conventional-specification Products	Expanded-specification Products
78K0/KB2	μPD78F0500, 78F0501, 78F0502, 78F0503, 78F0503D, 78F0500(A), 78F0501(A), 78F0502(A), 78F0503(A), 78F0500(A2), 78F0501(A2), 78F0502(A2), 78F0503(A2)	μPD78F0500A, 78F0501A, 78F0502A, 78F0503A, 78F0503DA, 78F0500A(A), 78F0501A(A), 78F0502A(A), 78F0503A(A), 78F0500A(A2), 78F0501A(A2), 78F0502A(A2), 78F0503A(A2)
78K0/KC2	μPD78F0511, 78F0512, 78F0513, 78F0514, 78F0515, 78F0513D, 78F0515D, 78F0511(A), 78F0512(A), 78F0513(A), 78F0514(A), 78F0515(A), 78F0511(A2), 78F0512(A2), 78F0513(A2), 78F0514(A2), 78F0515(A2)	μPD78F0511A, 78F0512A, 78F0513A, 78F0514A, 78F0515A, 78F0513DA, 78F0515DA, 78F0511A(A), 78F0512A(A), 78F0513A(A), 78F0514A(A), 78F0515A(A), 78F0511A(A2), 78F0512A(A2), 78F0513A(A2), 78F0514A(A2), 78F0515A(A2)
78K0/KD2	μPD78F0521, 78F0522, 78F0523, 78F0524, 78F0525, 78F0526, 78F0527, 78F0527D, 78F0521(A), 78F0522(A), 78F0523(A), 78F0524(A), 78F0525(A), 78F0526(A), 78F0527(A), 78F0521(A2), 78F0522(A2), 78F0523(A2), 78F0524(A2), 78F0525(A2), 78F0526(A2), 78F0527(A2)	μPD78F0521A, 78F0522A, 78F0523A, 78F0524A, 78F0525A, 78F0526A, 78F0527A, 78F0527DA, 78F0521A(A), 78F0522A(A), 78F0523A(A), 78F0524A(A), 78F0525A(A), 78F0526A(A), 78F0527A(A), 78F0521A(A2), 78F0522A(A2), 78F0523A(A2), 78F0524A(A2), 78F0525A(A2), 78F0526A(A2), 78F0527A(A2)
78K0/KE2	μPD78F0531, 78F0532, 78F0533, 78F0534, 78F0535, 78F0536, 78F0537, 78F0537D, 78F0531(A), 78F0532(A), 78F0533(A), 78F0534(A), 78F0535(A), 78F0536(A), 78F0537(A), 78F0531(A2), 78F0532(A2), 78F0533(A2), 78F0534(A2), 78F0535(A2), 78F0536(A2), 78F0537(A2)	μPD78F0531A, 78F0532A, 78F0533A, 78F0534A, 78F0535A, 78F0536A, 78F0537A, 78F0537DA, 78F0531A(A), 78F0532A(A), 78F0533A(A), 78F0534A(A), 78F0535A(A), 78F0536A(A), 78F0537A(A), 78F0531A(A2), 78F0532A(A2), 78F0533A(A2), 78F0534A(A2), 78F0535A(A2), 78F0536A(A2), 78F0537A(A2)
78K0/KF2	μPD78F0544, 78F0545, 78F0546, 78F0547, 78F0547D, 78F0544(A), 78F0545(A), 78F0546(A), 78F0547(A), 78F0544(A2), 78F0545(A2), 78F0546(A2), 78F0547(A2)	μPD78F0544A, 78F0545A, 78F0546A, 78F0547A, 78F0547DA, 78F0544A(A), 78F0545A(A), 78F0546A(A), 78F0547A(A), 78F0544A(A2), 78F0545A(A2), 78F0546A(A2), 78F0547A(A2)

Differences Between Conventional-specification Products and Expanded-specification Products

The differences between the conventional-specification products (μPD78F05xx, 78F05xxD) and expanded-specification products (μPD78F05xxA, 78F05xxDA) of the 78K0/Kx2 microcontrollers are described below.

- A/D conversion time
- X1 oscillator characteristics
- Instruction cycle, peripheral hardware clock frequency, external main system clock frequency, external main system clock input high-level width, and external main system clock input low-level width (AC characteristics)
- The number of flash memory rewrites and retention time
- Processing time of the self programming library
- Interrupt response time of the self programming library

For details, see **1.1 Differences Between Conventional-specification Products (μPD78F05xx, 78F05xxD) and Expanded-specification Products (μPD78F05xxA, 78F05xxDA).**

Purpose

This manual is intended to give users an understanding of the functions described in the **Organization** below.

Organization

The manual for the 78K0/Kx2 microcontrollers is separated into two parts: this manual and the instructions edition (common to the 78K0 microcontrollers).

78K0/Kx2 User's Manual (This Manual)	**78K/0 Series User's Manual Instructions**
• Pin functions • Internal block functions • Interrupts • Other on-chip peripheral functions • Electrical specifications	• CPU functions • Instruction set • Explanation of each instruction

How to Read This Manual

It is assumed that the readers of this manual have general knowledge of electrical engineering, logic circuits, and microcontrollers.

- When using this manual as the manual for (A) grade products and (A2) grade products of the 78K0/Kx2 microcontrollers:
  → Only the quality grade differs between standard products and (A), (A2) grade products. Read the part number as follows.
  - μPD78F05xx→ μPD78F05xx(A), 78F05xx(A2)
  - μPD78F05xxA→ μPD78F05xxA(A), 78F05xxA(A2)
- To gain a general understanding of functions:
  → Read this manual in the order of the **CONTENTS**. The mark "<R>" shows major revised points. The revised points can be easily searched by copying an "<R>" in the PDF file and specifying it in the "Find what:" field.
- How to interpret the register format:
  → For a bit number enclosed in angle brackets, the bit name is defined as a reserved word in the RA78K0, and is defined as an sfr variable using the #pragma sfr directive in the CC78K0.
- To check the details of a register when you know the register name:
  → See **APPENDIX C REGISTER INDEX**.

- To know details of the 78K0 microcontroller instructions:
  → Refer to the separate document **78K/0 Series Instructions User's Manual (U12326E)**.

Conventions

Data significance:	Higher digits on the left and lower digits on the right	
Active low representations:	$\overline{\times\times\times}$ (overscore over pin and signal name)	
Note:	Footnote for item marked with **Note** in the text	
Caution:	Information requiring particular attention	
Remark:	Supplementary information	
Numerical representations:	Binary	···×××× or ××××B
	Decimal	···××××
	Hexadecimal	···××××H

Related Documents The related documents indicated in this publication may include preliminary versions. However, preliminary versions are not marked as such.

Documents Related to Devices

Document Name	Document No.
78K0/Kx2 User's Manual	This manual
78K/0 Series Instructions User's Manual	U12326E
78K0/Kx2 Flash Memory Programming (Programmer) Application Note	U17739E
78K0/Kx2 Flash Memory Self Programming User's Manual	U17516E
78K0/Kx2 EEPROM™ Emulation Application Note	U17517E
78K0 Microcontrollers Self Programming Library Type01 User's Manual	U18274E
78K0 Microcontrollers EEPROM Emulation Library Type01 User's Manual	U18275E

Documents Related to Flash Memory Programming

Document Name	Document No.
PG-FP5 Flash Memory Programmer User's Manual	U18865E
PG-FP4 Flash Memory Programmer User's Manual	U15260E

Documents Related to Development Tools (Hardware)

Document Name	Document No.
QB-78K0KX2 In-Circuit Emulator User's Manual	U17341E
QB-MINI2 On-Chip Debug Emulator with Programming Function User's Manual	U18371E

Caution The related documents listed above are subject to change without notice. Be sure to use the latest version of each document when designing.

Documents Related to Development Tools (Software)

Document Name		Document No.
RA78K0 Ver.3.80 Assembler Package User's Manual [Note 1]	Operation	U17199E
	Language	U17198E
	Structured Assembly Language	U17197E
78K0 Assembler Package RA78K0 Ver.4.01 Operating Precautions (Notification Document) [Note 1]		ZUD-CD-07-0181-E
CC78K0 Ver.3.70 C Compiler User's Manual [Note 2]	Operation	U17201E
	Language	U17200E
78K0 C Compiler CC78K0 Ver. 4.00 Operating Precautions (Notification Document) [Note 2]		ZUD-CD-07-0103-E
SM+ System Simulator User's Manual	Operation	U18601E
	User Open Interface	U18212E
ID78K0-QB Ver.2.94 Integrated Debugger User's Manual	Operation	U18330E
ID78K0-QB Ver.3.00 Integrated Debugger User's Manual	Operation	U18492E
PM plus Ver.5.20[Note 3] User's Manual		U16934E
PM+ Ver.6.30[Note 4] User's Manual		U18416E

Notes 1. This document is installed into the PC together with the tool when installing RA78K0 Ver. 4.01. For descriptions not included in "78K0 Assembler Package RA78K0 Ver. 4.01 Operating Precautions", refer to the user's manual of RA78K0 Ver. 3.80.

2. This document is installed into the PC together with the tool when installing CC78K0 Ver. 4.00. For descriptions not included in "78K0 C Compiler CC78K0 Ver. 4.00 Operating Precautions", refer to the user's manual of CC78K0 Ver. 3.70.

3. PM plus Ver. 5.20 is the integrated development environment included with RA78K0 Ver. 3.80.

4. PM+ Ver. 6.30 is the integrated development environment included with RA78K0 Ver. 4.01. Software tool (assembler, C compiler, debugger, and simulator) products of different versions can be managed.

Other Documents

Document Name	Document No.
SEMICONDUCTOR SELECTION GUIDE – Products and Packages –	X13769X
Semiconductor Device Mount Manual	**Note**
Quality Grades on NEC Semiconductor Devices	C11531E
NEC Semiconductor Device Reliability/Quality Control System	C10983E
Guide to Prevent Damage for Semiconductor Devices by Electrostatic Discharge (ESD)	C11892E

Note See the "Semiconductor Device Mount Manual" website (http://www2.renesas.com/pkg/en/mount/index.html).

Caution The related documents listed above are subject to change without notice. Be sure to use the latest version of each document when designing.

All trademarks and registered trademarks are the property of their respective owners.
EEPROM is a trademark of Renesas Electronics Corporation.
Windows is a registered trademark or trademark of Microsoft Corporation in the United States and/or other countries.
SuperFlash is a registered trademark of Silicon Storage Technology, Inc. in several countries including the United States and Japan.

Caution: This product uses SuperFlash® technology licensed from Silicon Storage Technology, Inc.

CONTENTS

CHAPTER 1 OUTLINE 19

1.1 Differences Between Conventional-specification Products (μPD78F05xx and 78F05xxD) and Expanded-specification Products (μPD78F05xxA and 78F05xxDA) 19

1.1.1 A/D conversion time 20

1.1.2 X1 oscillator characteristics 20

1.1.3 Time Instruction cycle, peripheral hardware clock frequency, external main system clock frequency, external main system clock input high-level width, and external main system clock input low-level width (AC characteristics) 21

1.1.4 Number of flash memory rewrites and retention time 22

1.1.5 Processing time for self programming library 23

1.1.6 Interrupt response time for self programming library 29

1.2 Features 33

1.3 Applications 34

1.4 Ordering Information 35

1.5.1 78K0/KB2 42

1.5.2 78K0/KC2 44

1.5.3 78K0/KD2 47

1.5.4 78K0/KE2 48

1.5.5 78K0/KF2 50

1.6 Pin Identification 51

1.7 Block Diagram 52

1.7.1 78K0/KB2 52

1.7.2 78K0/KC2 53

1.7.3 78K0/KD2 54

1.7.4 78K0/KE2 55

1.7.5 78K0/KF2 56

1.8 Outline of Functions 57

CHAPTER 2 PIN FUNCTIONS 60

2.1 Pin Function List 60

2.1.1 78K0/KB2 61

2.1.2 78K0/KC2 64

2.1.3 78K0/KD2 67

2.1.4 78K0/KE2 70

2.1.5 78K0/KF2 74

2.2 Description of Pin Functions 78

2.2.1 P00 to P06 (port 0) 78

2.2.2 P10 to P17 (port 1) 79

2.2.3 P20 to P27 (port 2) 81

2.2.4 P30 to P33 (port 3) 82

2.2.5 P40 to P47 (port 4) 83

2.2.6 P50 to P57 (port 5) 84

2.2.7 P60 to P67 (port 6) 84

2.2.8 P70 to P77 (port 7) 85

2.2.9 P120 to P124 (port 12) 86

2.2.10 P130 (port 13) 87
2.2.11 P140 to P145 (port 14) 88
2.2.12 AV_{REF}, AV_{SS}, V_{DD}, EV_{DD}, V_{SS}, EV_{SS} 89
2.2.13 $\overline{RESET}$ 90
2.2.14 REGC 90
2.2.15 FLMD0 90
2.3 Pin I/O Circuits and Recommended Connection of Unused Pins 91

CHAPTER 3 CPU ARCHITECTURE 96

3.1 Memory Space 96
3.1.1 Internal program memory space 111
3.1.2 Memory bank (products whose flash memory is at least 96 KB only) 113
3.1.3 Internal data memory space 114
3.1.4 Special function register (SFR) area 116
3.1.5 Data memory addressing 116
3.2 Processor Registers 125
3.2.1 Control registers 125
3.2.2 General-purpose registers 129
3.2.3 Special function registers (SFRs) 130
3.3 Instruction Address Addressing 136
3.3.1 Relative addressing 136
3.3.2 Immediate addressing 137
3.3.3 Table indirect addressing 138
3.3.4 Register addressing 139
3.4 Operand Address Addressing 139
3.4.1 Implied addressing 139
3.4.2 Register addressing 140
3.4.3 Direct addressing 141
3.4.4 Short direct addressing 142
3.4.5 Special function register (SFR) addressing 143
3.4.6 Register indirect addressing 144
3.4.7 Based addressing 145
3.4.8 Based indexed addressing 146
3.4.9 Stack addressing 147

CHAPTER 4 MEMORY BANK SELECT FUNCTION (PRODUCTS WHOSE FLASH MEMORY IS AT LEAST 96 KB ONLY) 148

4.1 Memory Bank 148
4.2 Difference in Representation of Memory Space 149
4.3 Memory Bank Select Register (BANK) 150
4.4 Selecting Memory Bank 151
4.4.1 Referencing values between memory banks 151
4.4.2 Branching instruction between memory banks 153
4.4.3 Subroutine call between memory banks 155
4.4.4 Instruction branch to bank area by interrupt 157

CHAPTER 5 PORT FUNCTIONS 159

5.1 Port Functions 159
5.2 Port Configuration 163
5.2.1 Port 0 164
5.2.2 Port 1 175
5.2.3 Port 2 181
5.2.4 Port 3 183
5.2.5 Port 4 186
5.2.6 Port 5 188
5.2.7 Port 6 189
5.2.8 Port 7 194
5.2.9 Port 12 196
5.2.10 Port 13 199
5.2.11 Port 14 200
5.3 Registers Controlling Port Function 204
5.4 Port Function Operations 221
5.4.1 Writing to I/O port 221
5.4.2 Reading from I/O port 221
5.4.3 Operations on I/O port 221
5.5 Settings of Port Mode Register and Output Latch When Using Alternate Function 221
5.6 Cautions on 1-Bit Manipulation Instruction for Port Register n (Pn) 224

CHAPTER 6 CLOCK GENERATOR 225

6.1 Functions of Clock Generator 225
6.2 Configuration of Clock Generator 226
6.3 Registers Controlling Clock Generator 229
6.4 System Clock Oscillator 240
6.4.1 X1 oscillator 240
6.4.2 XT1 oscillator 240
6.4.3 When subsystem clock is not used 243
6.4.4 Internal high-speed oscillator 243
6.4.5 Internal low-speed oscillator 243
6.4.6 Prescaler 243
6.5 Clock Generator Operation 244
6.6 Controlling Clock 248
6.6.1 Example of controlling high-speed system clock 248
6.6.2 Example of controlling internal high-speed oscillation clock 251
6.6.3 Example of controlling subsystem clock 254
6.6.4 Example of controlling internal low-speed oscillation clock 256
6.6.5 Clocks supplied to CPU and peripheral hardware 257
6.6.6 CPU clock status transition diagram 258
6.6.7 Condition before changing CPU clock and processing after changing CPU clock 265
6.6.8 Time required for switchover of CPU clock and main system clock 266
6.6.9 Conditions before clock oscillation is stopped 268
6.6.10 Peripheral hardware and source clocks 269

CHAPTER 7 16-BIT TIMER/EVENT COUNTERS 00 AND 01 270

7.1 Functions of 16-Bit Timer/Event Counters 00 and 01 270
7.2 Configuration of 16-Bit Timer/Event Counters 00 and 01 271
7.3 Registers Controlling 16-Bit Timer/Event Counters 00 and 01 277
7.4 Operation of 16-Bit Timer/Event Counters 00 and 01 289
7.4.1 Interval timer operation 289
7.4.2 Square-wave output operation 292
7.4.3 External event counter operation 295
7.4.4 Operation in clear & start mode entered by TI00n pin valid edge input 299
7.4.5 Free-running timer operation 312
7.4.6 PPG output operation 321
7.4.7 One-shot pulse output operation 325
7.4.8 Pulse width measurement operation 330
7.5 Special Use of TM0n 338
7.5.1 Rewriting CR01n during TM0n operation 338
7.5.2 Setting LVS0n and LVR0n 338
7.6 Cautions for 16-Bit Timer/Event Counters 00 and 01 340

CHAPTER 8 8-BIT TIMER/EVENT COUNTERS 50 AND 51 345

8.1 Functions of 8-Bit Timer/Event Counters 50 and 51 345
8.2 Configuration of 8-Bit Timer/Event Counters 50 and 51 345
8.3 Registers Controlling 8-Bit Timer/Event Counters 50 and 51 348
8.4 Operations of 8-Bit Timer/Event Counters 50 and 51 354
8.4.1 Operation as interval timer 354
8.4.2 Operation as external event counter 356
8.4.3 Square-wave output operation 357
8.4.4 PWM output operation 358
8.5 Cautions for 8-Bit Timer/Event Counters 50 and 51 362

CHAPTER 9 8-BIT TIMERS H0 AND H1 363

9.1 Functions of 8-Bit Timers H0 and H1 363
9.2 Configuration of 8-Bit Timers H0 and H1 363
9.3 Registers Controlling 8-Bit Timers H0 and H1 367
9.4 Operation of 8-Bit Timers H0 and H1 373
9.4.1 Operation as interval timer/square-wave output 373
9.4.2 Operation as PWM output 376
9.4.3 Carrier generator operation (8-bit timer H1 only) 382

CHAPTER 10 WATCH TIMER 389

10.1 Functions of Watch Timer 389
10.2 Configuration of Watch Timer 391
10.3 Register Controlling Watch Timer 391
10.4 Watch Timer Operations 394
10.4.1 Watch timer operation 394
10.4.2 Interval timer operation 394
10.5 Cautions for Watch Timer 395

CHAPTER 11 WATCHDOG TIMER 396

11.1 Functions of Watchdog Timer 396
11.2 Configuration of Watchdog Timer 397
11.3 Register Controlling Watchdog Timer 398
11.4 Operation of Watchdog Timer 399
11.4.1 Controlling operation of watchdog timer 399
11.4.2 Setting overflow time of watchdog timer 400
11.4.3 Setting window open period of watchdog timer 401

CHAPTER 12 CLOCK OUTPUT/BUZZER OUTPUT CONTROLLER 403

12.1 Functions of Clock Output/Buzzer Output Controller 403
12.2 Configuration of Clock Output/Buzzer Output Controller 404
12.3 Registers Controlling Clock Output/Buzzer Output Controller 404
12.4 Operations of Clock Output/Buzzer Output Controller 408
12.4.1 Operation as clock output 408
12.4.2 Operation as buzzer output 408

CHAPTER 13 A/D CONVERTER 409

13.1 Function of A/D Converter 409
13.2 Configuration of A/D Converter 410
13.3 Registers Used in A/D Converter 412
13.4 A/D Converter Operations 421
13.4.1 Basic operations of A/D converter 421
13.4.2 Input voltage and conversion results 422
13.4.3 A/D converter operation mode 424
13.5 How to Read A/D Converter Characteristics Table 426
13.6 Cautions for A/D Converter 428

CHAPTER 14 SERIAL INTERFACE UART0 432

14.1 Functions of Serial Interface UART0 432
14.2 Configuration of Serial Interface UART0 433
14.3 Registers Controlling Serial Interface UART0 436
14.4 Operation of Serial Interface UART0 441
14.4.1 Operation stop mode 441
14.4.2 Asynchronous serial interface (UART) mode 442
14.4.3 Dedicated baud rate generator 448
14.4.4 Calculation of baud rate 449

CHAPTER 15 SERIAL INTERFACE UART6 453

15.1 Functions of Serial Interface UART6 453
15.2 Configuration of Serial Interface UART6 457
15.3 Registers Controlling Serial Interface UART6 460
15.4 Operation of Serial Interface UART6 469
15.4.1 Operation stop mode 469
15.4.2 Asynchronous serial interface (UART) mode 470
15.4.3 Dedicated baud rate generator 483
15.4.4 Calculation of baud rate 484

CHAPTER 16 SERIAL INTERFACES CSI10 AND CSI11 490

16.1 Functions of Serial Interfaces CSI10 and CSI11 490
16.2 Configuration of Serial Interfaces CSI10 and CSI11 491
16.3 Registers Controlling Serial Interfaces CSI10 and CSI11 493
16.4 Operation of Serial Interfaces CSI10 and CSI11 499
16.4.1 Operation stop mode 499
16.4.2 3-wire serial I/O mode 500

CHAPTER 17 SERIAL INTERFACE CSIA0 512

17.1 Functions of Serial Interface CSIA0 512
17.2 Configuration of Serial Interface CSIA0 513
17.3 Registers Controlling Serial Interface CSIA0 515
17.4 Operation of Serial Interface CSIA0 524
17.4.1 Operation stop mode 524
17.4.2 3-wire serial I/O mode 525
17.4.3 3-wire serial I/O mode with automatic transmit/receive function 530

CHAPTER 18 SERIAL INTERFACE IIC0 550

18.1 Functions of Serial Interface IIC0 550
18.2 Configuration of Serial Interface IIC0 553
18.3 Registers to Control Serial Interface IIC0 556
18.4 I^2C Bus Mode Functions 569
18.4.1 Pin configuration 569
18.5 I^2C Bus Definitions and Control Methods 570
18.5.1 Start conditions 570
18.5.2 Addresses 571
18.5.3 Transfer direction specification 571
18.5.4 Acknowledge ($\overline{ACK}$) 572
18.5.5 Stop condition 573
18.5.6 Wait 574
18.5.7 Canceling wait 576
18.5.8 Interrupt request (INTIIC0) generation timing and wait control 576
18.5.9 Address match detection method 577
18.5.10 Error detection 577
18.5.11 Extension code 578
18.5.12 Arbitration 579
18.5.13 Wakeup function 580
18.5.14 Communication reservation 581

18.5.15 Cautions 584
18.5.16 Communication operations 585
18.5.17 Timing of I²C interrupt request (INTIIC0) occurrence 593
18.6 Timing Charts 614

CHAPTER 19 MULTIPLIER/DIVIDER 621

19.1 Functions of Multiplier/Divider 621
19.2 Configuration of Multiplier/Divider 621
19.3 Register Controlling Multiplier/Divider 625
19.4 Operations of Multiplier/Divider 626
19.4.1 Multiplication operation 626
19.4.2 Division operation 628

CHAPTER 20 INTERRUPT FUNCTIONS 630

20.1 Interrupt Function Types 630
20.2 Interrupt Sources and Configuration 630
20.3 Registers Controlling Interrupt Functions 635
20.4 Interrupt Servicing Operations 656
20.4.1 Maskable interrupt acknowledgment 656
20.4.2 Software interrupt request acknowledgment 658
20.4.3 Multiple interrupt servicing 659
20.4.4 Interrupt request hold 662

CHAPTER 21 KEY INTERRUPT FUNCTION 663

21.1 Functions of Key Interrupt 663
21.2 Configuration of Key Interrupt 664
21.3 Register Controlling Key Interrupt 665

CHAPTER 22 STANDBY FUNCTION 666

22.1 Standby Function and Configuration 666
22.1.1 Standby function 666
22.1.2 Registers controlling standby function 667
22.2 Standby Function Operation 669
22.2.1 HALT mode 669
22.2.2 STOP mode 674

CHAPTER 23 RESET FUNCTION 681

23.1 Register for Confirming Reset Source 691

CHAPTER 24 POWER-ON-CLEAR CIRCUIT 692

24.1 Functions of Power-on-Clear Circuit 692
24.2 Configuration of Power-on-Clear Circuit 693
24.3 Operation of Power-on-Clear Circuit 693
24.4 Cautions for Power-on-Clear Circuit 696

CHAPTER 25 LOW-VOLTAGE DETECTOR 698

25.1 Functions of Low-Voltage Detector 698
25.2 Configuration of Low-Voltage Detector 699
25.3 Registers Controlling Low-Voltage Detector 699
25.4 Operation of Low-Voltage Detector 702
25.4.1 When used as reset 703
25.4.2 When used as interrupt 708
25.5 Cautions for Low-Voltage Detector 713

CHAPTER 26 OPTION BYTE 716

26.1 Functions of Option Bytes 716
26.2 Format of Option Byte 717

CHAPTER 27 FLASH MEMORY 721

27.1 Internal Memory Size Switching Register 721
27.2 Internal Expansion RAM Size Switching Register 722
27.3 Writing with Flash Memory Programmer 724
27.4 Programming Environment 724
27.5 Communication Mode 725
27.6 Connection of Pins on Board 727
27.6.1 FLMD0 pin 728
27.6.2 Serial interface pins 728
27.6.3 $\overline{\text{RESET}}$ pin 730
27.6.4 Port pins 730
27.6.5 REGC pin 730
27.6.6 Other signal pins 731
27.6.7 Power supply 731
27.7 Programming Method 732
27.7.1 Controlling flash memory 732
27.7.2 Flash memory programming mode 732
27.7.3 Selecting communication mode 733
27.7.4 Communication commands 734
27.8 Security Settings 735
27.9 Processing Time for Each Command When PG-FP4 or PG-FP5 Is Used (Reference) 737
27.10 Flash Memory Programming by Self-Programming 739
27.10.1 Boot swap function 753
27.11 Creating ROM Code to Place Order for Previously Written Product 755
27.11.1 Procedure for using ROM code to place an order 755

CHAPTER 28 ON-CHIP DEBUG FUNCTION (μPD78F05xxD and 78F05xxDA ONLY) 756

28.1 Connecting QB-MINI2 to μPD78F05xxD and 78F05xxDA 756
28.2 Reserved Area Used by QB-MINI2 758

CHAPTER 29 INSTRUCTION SET 759

29.1 Conventions Used in Operation List 759

29.1.1 Operand identifiers and specification methods 759

29.1.2 Description of operation column 760

29.1.3 Description of flag operation column 760

29.2 Operation List 761

29.3 Instructions Listed by Addressing Type 769

CHAPTER 30 ELECTRICAL SPECIFICATIONS (STANDARD PRODUCTS) 772

CHAPTER 31 ELECTRICAL SPECIFICATIONS ((A) GRADE PRODUCTS) 802

CHAPTER 32 ELECTRICAL SPECIFICATIONS ((A2) GRADE PRODUCTS: T_A = –40 to +110°C) 830

CHAPTER 33 ELECTRICAL SPECIFICATIONS ((A2) GRADE PRODUCTS: T_A = –40 to +125°C) 859

CHAPTER 34 PACKAGE DRAWINGS 888

34.1 78K0/KB2 888

34.2 78K0/KC2 891

34.3 78K0/KD2 896

34.4 78K0/KE2 898

34.5 78K0/KF2 908

CHAPTER 35 RECOMMENDED SOLDERING CONDITIONS 912

CHAPTER 36 CAUTIONS FOR WAIT 917

36.1 Cautions for Wait 917

36.2 Peripheral Hardware That Generates Wait 918

APPENDIX A DEVELOPMENT TOOLS 920

A.1 Software Package 923

A.2 Language Processing Software 923

A.3 Flash Memory Programming Tools 924

A.3.1 When using flash memory programmer FG-FP5, FL-PR5, FG-FP4, and FL-PR4 924

A.3.2 When using on-chip debug emulator with programming function QB-MINI2 925

A.4 Debugging Tools (Hardware) 925

A.4.1 When using in-circuit emulator QB-78K0KX2 925

A.4.2 When using on-chip debug emulator with programming function QB-MINI2 927

A.5 Debugging Tools (Software) 928

APPENDIX B NOTES ON TARGET SYSTEM DESIGN 929

APPENDIX C REGISTER INDEX 936

C.1 Register Index (In Alphabetical Order with Respect to Register Names) 936
C.2 Register Index (In Alphabetical Order with Respect to Register Symbol) 940

APPENDIX D LIST OF CAUTIONS 944

APPENDIX E REVISION HISTORY 974

E.1 Major Revisions in This Edition 974
E.2 Revision History of Preceding Editions 975

CHAPTER 1 OUTLINE

1.1 Differences Between Conventional-specification Products (μPD78F05xx and 78F05xxD) and Expanded-specification Products (μPD78F05xxA and 78F05xxDA)

The differences between the conventional-specification products (μPD78F05xx and 78F05xxD) and expanded-specification products (μPD78F05xxA and 78F05xxDA) of the 78K0/Kx2 microcontrollers are described below.

- A/D conversion time
- X1 oscillator characteristics
- Instruction cycle, peripheral hardware clock frequency, external main system clock frequency, external main system clock input high-level width, and external main system clock input low-level width (AC characteristics)
- The number of flash memory rewrites and retention time
- Processing time of the self programming library
- Interrupt response time of the self programming library

1.1.1 A/D conversion time

(1) Conventional-specification products (μPD78F05xx and 78F05xxD)

Parameter	Symbol	Conditions	MIN.	MAX.	Unit
Conversion time	t_{CONV}	4.0 V ≤ AV_{REF} ≤ 5.5 V	6.1	36.7	μs
		2.7 V ≤ AV_{REF} < 4.0 V	12.2	36.7	μs
		2.3 V ≤ AV_{REF} < 2.7 V Note	27	66.6	μs

(2) Expanded-specification products (μPD78F05xxA and 78F05xxDA)

Parameter	Symbol	Conditions	MIN.	MAX.	Unit
Conversion time	t_{CONV}	4.0 V ≤ AV_{REF} ≤ 5.5 V	6.1	66.6	μs
		2.7 V ≤ AV_{REF} < 4.0 V	12.2	66.6	μs
		2.3 V ≤ AV_{REF} < 2.7 V Note	27	66.6	μs

Note Standard and (A) grade products only

1.1.2 X1 oscillator characteristics

(1) Conventional-specification products (μPD78F05xx and 78F05xxD)

Resonator	Parameter	Conditions	MIN.	TYP.	MAX.	Unit
Ceramic resonator	X1 clock oscillation frequency (f_X)	4.0 V ≤ V_{DD} ≤ 5.5 V	1.0 Note 2		20.0	MHz
		2.7 V ≤ V_{DD} < 4.0 V	1.0 Note 2		10.0	
		1.8 V ≤ V_{DD} < 2.7 V Note 1	1.0		5.0	

(2) Expanded-specification products (μPD78F05xxA and 78F05xxDA)

Resonator	Parameter	Conditions	MIN.	TYP.	MAX.	Unit
Ceramic resonator	X1 clock oscillation frequency (f_X)	2.7 V ≤ V_{DD} ≤ 5.5 V	1.0 Note 2		20.0	MHz
		1.8 V ≤ V_{DD} < 2.7 V Note 1	1.0		5.0	

Notes 1. Standard and (A) grade products only

2. It is 2.0 MHz (MIN.) when programming on the board via UART6.

1.1.3 Time Instruction cycle, peripheral hardware clock frequency, external main system clock frequency, external main system clock input high-level width, and external main system clock input low-level width (AC characteristics)

(1) Conventional-specification products (μPD78F05xx and 78F05xxD)

Parameter	Symbol	Conditions		MIN.	TYP.	MAX.	Unit
Instruction cycle (minimum instruction execution time)	T_{CY}	Main system clock (f_{XP}) operation	4.0 V ≤ V_{DD} ≤ 5.5 V	0.1		32	μs
			2.7 V ≤ V_{DD} < 4.0 V	0.2		32	μs
			1.8 V ≤ V_{DD} < 2.7 V Note 1	0.4 Note 3		32	μs
		Subsystem clock (f_{SUB}) operation Note 2		114	122	125	μs
Peripheral hardware clock frequency	f_{PRS}	f_{PRS} = f_{XH} (XSEL = 1)	4.0 V ≤ V_{DD} ≤ 5.5 V			20	MHz
			2.7 V ≤ V_{DD} < 4.0 V			10	MHz
			1.8 V ≤ V_{DD} < 2.7 V Note 1			5	MHz
		f_{PRS} = f_{RH} (XSEL = 0)	2.7 V ≤ V_{DD} ≤ 5.5 V	7.6		8.4	MHz
			1.8 V ≤ V_{DD} < 2.7 V Notes 1, 5	7.6		10.4	MHz
External main system clock frequency	f_{EXCLK}	4.0 V ≤ V_{DD} ≤ 5.5 V		1.0 Note 6		20.0	MHz
		2.7 V ≤ V_{DD} < 4.0 V		1.0 Note 6		10.0	MHz
		1.8 V ≤ V_{DD} < 2.7 V Note 1		1.0		5.0	MHz
External main system clock input high-level width, low-level width	t_{EXCLKH}, t_{EXCLKL}	4.0 V ≤ V_{DD} ≤ 5.5 V		24			ns
		2.7 V ≤ V_{DD} < 4.0 V		48			ns
		1.8 V ≤ V_{DD} < 2.7 V Note 1		96			ns

(2) Expanded-specification products (μPD78F05xxA and 78F05xxDA)

Parameter	Symbol	Conditions		MIN.	TYP.	MAX.	Unit
Instruction cycle (minimum instruction execution time)	T_{CY}	Main system clock (f_{XP}) operation	2.7 V ≤ V_{DD} ≤ 5.5 V	0.1		32	μs
			1.8 V ≤ V_{DD} < 2.7 V Note 1	0.4 Note 3		32	μs
		Subsystem clock (f_{SUB}) operation Note 2		114	122	125	μs
Peripheral hardware clock frequency	f_{PRS}	f_{PRS} = f_{XH} (XSEL = 1)	4.0 V ≤ V_{DD} ≤ 5.5 V			20	MHz
			2.7 V ≤ V_{DD} < 4.0 V Note 4			20	MHz
			1.8 V ≤ V_{DD} < 2.7 V Note 1			5	MHz
		f_{PRS} = f_{RH} (XSEL = 0)	2.7 V ≤ V_{DD} ≤ 5.5 V	7.6		8.4	MHz
			1.8 V ≤ V_{DD} < 2.7 V Notes 1, 5	7.6		10.4	MHz
External main system clock frequency	f_{EXCLK}	2.7 V ≤ V_{DD} ≤ 5.5 V		1.0 Note 6		20.0	MHz
		1.8 V ≤ V_{DD} < 2.7 V Note 1		1.0		5.0	MHz
External main system clock input high-level width, low-level width	t_{EXCLKH}, t_{EXCLKL}	2.7 V ≤ V_{DD} ≤ 5.5 V		24			ns
		1.8 V ≤ V_{DD} < 2.7 V Note 1		96			ns

Notes 1. Standard and (A) grade products only

2. The 78K0/KB2 is not provided with a subsystem clock.

3. 0.38 μs when operating with the 8 MHz internal oscillator.

4. Characteristics of the main system clock frequency. Set the division clock to be set by a peripheral function to f_{XH}/2 (10 MHz) or less. The multiplier/divider, however, can operate on f_{XH} (20 MHz).

5. Characteristics of the main system clock frequency. Set the division clock to be set by a peripheral function to f_{RH}/2 or less.

6. 2.0 MHz (MIN.) when using UART6 during on-board programming.

1.1.4 Number of flash memory rewrites and retention time

Item	Conventional-specification Products (μPD78F05xx and 78F05xxD)	Expanded-specification Products (μPD78F05xxA and 78F05xxDA)	
Number of rewrites per chip (retention time)	100 times (Retention: 10 years)	• When a flash memory programmer is used, and the libraries[Note 1] provided by Renesas Electronics are used • For program update	1,000 times (Retention: 15 years)
		• When the EEPROM emulation libraries[Note 2] provided by Renesas Electronics are used • The rewritable ROM size: 4 KB • For data update	10,000 times (Retention: 5 years)
		Conditions other than the above[Note 3]	100 times (Retention: 10 years)

Notes 1. The sample library specified by the **78K0/Kx2 Flash Memory Self Programming User's Manual** (Document No.: **U17516E**) is excluded.

2. The sample program specified by the **78K0/Kx2 EEPROM Emulation Application Note** (Document No.: **U17517E**) is excluded.

3. These include when the sample library specified by the **78K0/Kx2 Flash Memory Self Programming User's Manual** (Document No.: **U17516E**) and the sample program specified by the **78K0/Kx2 EEPROM Emulation Application Note** (Document No.: **U17517E**) are used.

1.1.5 Processing time for self programming library

(1) Conventional-specification products (μPD78F05xx and 78F05xxD) (1/3)

<1> When internal high-speed oscillation clock is used and entry RAM is located outside short direct addressing range

Library Name		Processing Time (μs)			
		Normal Model of C Compiler		Static Model of C Compiler/Assembler	
		Min.	Max.	Min.	Max.
Self programming start library		4.25			
Initialize library		977.75			
Mode check library		753.875		753.125	
Block blank check library		12770.875		12765.875	
Block erase library		36909.5	356318	36904.5	356296.25
Word write library		1214 (1214.375)	2409 (2409.375)	1207 (1207.375)	2402 (2402.375)
Block verify library		25618.875		25613.875	
Self programming end library		4.25			
Get information library	Option value: 03H	871.25 (871.375)		866 (866.125)	
	Option value: 04H	863.375 (863.5)		858.125 (858.25)	
	Option value: 05H	1024.75 (1043.625)		1037.5 (1038.375)	
Set information library		105524.75	790809.375	105523.75	790808.375
EEPROM write library		1496.5 (1496.875)	2691.5 (2691.875)	1489.5 (1489.875)	2684.5 (2684.875)

<2> When internal high-speed oscillation clock is used and entry RAM is located in short direct addressing range

Library Name		Processing Time (μs)			
		Normal Model of C Compiler		Static Model of C Compiler/Assembler	
		Min.	Max.	Min.	Max.
Self programming start library		4.25			
Initialize library		443.5			
Mode check library		219.625		218.875	
Block blank check library		12236.625		12231.625	
Block erase library		36363.25	355771.75	36358.25	355750
Word write library		679.75 (680.125)	1874.75 (1875.125)	672.75 (673.125)	1867.75 (1868.125)
Block verify library		25072.625		25067.625	
Self programming end library		4.25			
Get information library	Option value: 03H	337 (337.125)		331.75 (331.875)	
	Option value: 04H	329.125 (239.25)		323.875 (324)	
	Option value: 05H	502.25 (503.125)		497 (497.875)	
Set information library		104978.5	541143.125	104977.5	541142.125
EEPROM write library		962.25 (962.625)	2157.25 (2157.625)	955.25 (955.625)	2150.25 (2150.625)

Remarks 1. Values in parentheses indicate values when a write start address structure is located other than in the internal high-speed RAM.

2. The above processing times are those during stabilized operation of the internal high-speed oscillator (RSTS = 1).

3. RSTS: Bit 7 of the internal oscillation mode register (RCM)

(1) Conventional-specification products (μPD78F05xx and 78F05xxD) (2/3)

<3> When high-speed system clock (X1 oscillation or external clock input) is used and entry RAM is located outside short direct addressing range

Library Name		Processing Time (μs)			
		Normal Model of C Compiler		Static Model of C Compiler/Assembler	
		Min.	Max.	Min.	Max.
Self programming start library		34/f_{CPU}			
Initialize library		49/f_{CPU} + 485.8125			
Mode check library		35/f_{CPU} + 374.75		29/f_{CPU} + 374.75	
Block blank check library		174/f_{CPU} + 6382.0625		134/f_{CPU} + 6382.0625	
Block erase library		174/f_{CPU} + 31093.875	174/f_{CPU} + 298948.125	134/f_{CPU} + 31093.875	134/f_{CPU} + 298948.125
Word write library		318 (321)/f_{CPU} + 644.125	318 (321)/f_{CPU} + 1491.625	262 (265)/f_{CPU} + 644.125	262 (265)/f_{CPU} + 1491.625
Block verify library		174/f_{CPU} + 13448.5625		134/f_{CPU} + 13448.5625	
Self programming end library		34/f_{CPU}			
Get information library	Option value: 03H	171 (172)/f_{CPU} + 432.4375		129 (130)/f_{CPU} + 432.4375	
	Option value: 04H	181 (182)/f_{CPU} + 427.875		139 (140)/f_{CPU} + 427.875	
	Option value: 05H	404 (411)/f_{CPU} + 496.125		362 (369)/f_{CPU} + 496.125	
Set information library		75/f_{CPU} + 79157.6875	75/f_{CPU} + 652400	67f_{CPU} + 79157.6875	67f_{CPU} + 652400
EEPROM write library		318 (321)/f_{CPU} + 799.875	318 (321)/f_{CPU} + 1647.375	262 (265)/f_{CPU} + 799.875	262 (265)/f_{CPU} + 1647.375

Remarks 1. Values in parentheses indicate values when a write start address structure is located other than in the internal high-speed RAM.

2. The above processing times are those during stabilized operation of the internal high-speed oscillator (RSTS = 1).

3. f_{CPU}: CPU operation clock frequency

4. RSTS: Bit 7 of the internal oscillation mode register (RCM)

(1) Conventional-specification products (μPD78F05xx and 78F05xxD) (3/3)

<4> When high-speed system clock (X1 oscillation or external clock input) is used and entry RAM is located in short direct addressing range

Library Name		Processing Time (μs)			
		Normal Model of C Compiler		Static Model of C Compiler/Assembler	
		Min.	Max.	Min.	Max.
Self programming start library		34/f_{CPU}			
Initialize library		49/f_{CPU} + 224.6875			
Mode check library		35/f_{CPU} + 113.625		29/f_{CPU} + 113.625	
Block blank check library		174/f_{CPU} + 6120.9375		134/f_{CPU} + 6120.9375	
Block erase library		174/f_{CPU} + 30820.75	174/f_{CPU} + 298675	134/f_{CPU} + 30820.75	134/f_{CPU} + 298675
Word write library		318 (321)/f_{CPU} + 383	318 (321)/f_{CPU} + 1230.5	262 (265)/f_{CPU} + 383	262 (265)/f_{CPU} + 1230.5
Block verify library		174/f_{CPU} + 13175.4375		134/f_{CPU} + 13175.4375	
Self programming end library		34/f_{CPU}			
Get information library	Option value: 03H	171 (172)/f_{CPU} + 171.3125		129 (130)/f_{CPU} + 171.3125	
	Option value: 04H	181 (182)/f_{CPU} + 166.75		139 (140)/f_{CPU} + 166.75	
	Option value: 05H	404 (411)/f_{CPU} + 231.875		362 (369)/f_{CPU} + 231.875	
Set information library		75/f_{CPU} + 78884.5625	75/f_{CPU} + 527566.875	67/f_{CPU} + 78884.5625	67/f_{CPU} + 527566.875
EEPROM write library		318 (321)/f_{CPU} + 538.75	318 (321)/f_{CPU} + 1386.25	262 (265)/f_{CPU} + 538.75	262 (265)/f_{CPU} + 1386.25

Remarks 1. Values in parentheses indicate values when a write start address structure is located other than in the internal high-speed RAM.

2. The above processing times are those during stabilized operation of the internal high-speed oscillator (RSTS = 1).

3. f_{CPU}: CPU operation clock frequency

4. RSTS: Bit 7 of the internal oscillation mode register (RCM)

(2) Expanded-specification products (μPD78F05xxA and 78F05xxDA) (1/3)

<1> When internal high-speed oscillation clock is used and entry RAM is located outside short direct addressing range

Library Name		Processing Time (μs)			
		Normal Model of C Compiler		Static Model of C Compiler/Assembler	
		Min.	Max.	Min.	Max.
Self programming start library		4.0	4.5	4.0	4.5
Initialize library		1105.9	1106.6	1105.9	1106.6
Mode check library		905.7	906.1	904.9	905.3
Block blank check library		12776.1	12778.3	12770.9	12772.6
Block erase library		26050.4	349971.3	26045.3	349965.6
Word write library		1180.1 + 203 × w	1184.3 + 2241 × w	1172.9 + 203 × w	1176.3 + 2241 × w
Block verify library		25337.9	25340.2	25332.8	25334.5
Self programming end library		4.0	4.5	4.0	4.5
Get information library	Option value: 03H	1072.9	1075.2	1067.5	1069.1
	Option value: 04H	1060.2	1062.6	1054.8	1056.6
	Option value: 05H	1023.8	1028.2	1018.3	1022.1
Set information library		70265.9	759995.0	70264.9	759994.0
EEPROM write library		1316.8 + 347 × w	1320.9 + 2385 × w	1309.0 + 347 × w	1312.4 + 2385 × w

<2> When internal high-speed oscillation clock is used and entry RAM is located in short direct addressing range

Library Name		Processing Time (μs)			
		Normal Model of C Compiler		Static Model of C Compiler/Assembler	
		Min.	Max.	Min.	Max.
Self programming start library		4.0	4.5	4.0	4.5
Initialize library		449.5	450.2	449.5	450.2
Mode check library		249.3	249.7	248.6	248.9
Block blank check library		12119.7	12121.9	12114.6	12116.3
Block erase library		25344.7	349266.4	25339.6	349260.8
Word write library		445.8 + 203 × w	449.9 + 2241 × w	438.5 + 203 × w	441.9 + 2241 × w
Block verify library		24682.7	24684.9	24677.6	24679.3
Self programming end library		4.0	4.5	4.0	4.5
Get information library	Option value: 03H	417.6	419.8	412.1	413.8
	Option value: 04H	405.0	407.4	399.5	401.3
	Option value: 05H	367.4	371.8	361.9	365.8
Set information library		69569.3	759297.3	69568.3	759296.2
EEPROM write library		795.1 + 347 × w	799.3 + 2385 × w	787.4 + 347 × w	790.8 + 2385 × w

Remarks 1. The above processing times are those when a write start address structure is located in the internal high-speed RAM and during stabilized operation of the internal high-speed oscillator (RSTS = 1).

2. RSTS: Bit 7 of the internal oscillation mode register (RCM)

3. w: Number of words in write data (1 word = 4 bytes)

(2) Expanded-specification products (μPD78F05xxA and 78F05xxDA) (2/3)

<3> When high-speed system clock (X1 oscillation or external clock input) is used and entry RAM is located outside short direct addressing range

Library Name		Processing Time (μs)			
		Normal Model of C Compiler		Static Model of C Compiler/Assembler	
		Min.	Max.	Min.	Max.
Self programming start library		34/f_{CPU}			
Initialize library		55/f_{CPU} + 594			
Mode check library		36/f_{CPU} + 495		30/f_{CPU} + 495	
Block blank check library		179/f_{CPU} + 6429		136/f_{CPU} + 6429	
Block erase library		179/f_{CPU} + 19713	179/f_{CPU} + 268079	136/f_{CPU} + 19713	136/f_{CPU} + 268079
Word write library		333/f_{CPU} + 647 + 136 × w	333/f_{CPU} + 647 + 1647 × w	272/f_{CPU} + 647 + 136 × w	272/f_{CPU} + 647 + 1647 × w
Block verify library		179/f_{CPU} + 13284		136/f_{CPU} + 13284	
Self programming end library		34/f_{CPU}			
Get information library	Option value: 03H	180/f_{CPU} + 581		134f_{CPU} + 581	
	Option value: 04H	190/f_{CPU} + 574		144/f_{CPU} + 574	
	Option value: 05H	350/f_{CPU} + 535		304/f_{CPU} + 535	
Set information library		80/f_{CPU} + 43181	80/f_{CPU} + 572934	72/f_{CPU} + 43181	72/f_{CPU} + 572934
EEPROM write library		333/f_{CPU} + 729 + 209 × w	333/f_{CPU} + 729 + 1722 × w	268/f_{CPU} + 729 + 209 × w	268/f_{CPU} + 729 + 1722 × w

Remarks 1. The above processing times are those when a write start address structure is located in the internal high-speed RAM and during stabilized operation of the internal high-speed oscillator (RSTS = 1).

2. RSTS: Bit 7 of the internal oscillation mode register (RCM)

3. f_{CPU}: CPU operation clock frequency

4. w: Number of words in write data (1 word = 4 bytes)

(2) Expanded-specification products (μPD78F05xxA and 78F05xxDA) (3/3)

<4> When high-speed system clock (X1 oscillation or external clock input) is used and entry RAM is located in short direct addressing range

Library Name		Processing Time (μs)			
		Normal Model of C Compiler		Static Model of C Compiler/Assembler	
		Min.	Max.	Min.	Max.
Self programming start library		34/f_{CPU}			
Initialize library		55/f_{CPU} + 272			
Mode check library		36/f_{CPU} + 173		30/f_{CPU} + 173	
Block blank check library		179/f_{CPU} + 6108		136/f_{CPU} + 6108	
Block erase library		179/f_{CPU} + 19371	179/f_{CPU} + 267738	136/f_{CPU} + 19371	136/f_{CPU} + 267738
Word write library		333/f_{CPU} + 247 + 136 × w	333/f_{CPU} + 247 + 1647 × w	272/f_{CPU} + 247 + 136 × w	272/f_{CPU} + 247 + 1647 × w
Block verify library		179/f_{CPU} + 12964		136/f_{CPU} + 12964	
Self programming end library		34/f_{CPU}			
Get information library	Option value: 03H	180/f_{CPU} + 261		134/f_{CPU} + 261	
	Option value: 04H	190/f_{CPU} + 254		144/f_{CPU} + 254	
	Option value: 05H	350/f_{CPU} + 213		304/f_{CPU} + 213	
Set information library		80/f_{CPU} + 42839	80/f_{CPU} + 572592	72/f_{CPU} + 42839	72/f_{CPU} + 572592
EEPROM write library		333/f_{CPU} + 516 + 209 × w	333/f_{CPU} + 516 + 1722 × w	268/f_{CPU} + 516 + 209 × w	268/f_{CPU} + 516 + 1722 × w

Remarks 1. The above processing times are those when a write start address structure is located in the internal high-speed RAM and during stabilized operation of the internal high-speed oscillator (RSTS = 1).

2. RSTS: Bit 7 of the internal oscillation mode register (RCM)

3. f_{CPU}: CPU operation clock frequency

4. w: Number of words in write data (1 word = 4 bytes)

1.1.6 Interrupt response time for self programming library

(1) Conventional-specification products (μPD78F05xx and 78F05xxD) (1/2)

<1> When internal high-speed oscillation clock is used

Library Name	Interrupt Response Time (μs (Max.))			
	Normal Model of C Compiler		Static Model of C Compiler/Assembler	
	Entry RAM location is outside short direct addressing range	Entry RAM location is in short direct addressing range	Entry RAM location is outside short direct addressing range	Entry RAM location is in short direct addressing range
Block blank check library	933.6	668.6	927.9	662.9
Block erase library	1026.6	763.6	1020.9	757.9
Word write library	2505.8	1942.8	2497.8	1934.8
Block verify library	958.6	693.6	952.9	687.9
Set information library	476.5	211.5	475.5	210.5
EEPROM write library	2760.8	2168.8	2759.5	2167.5

Remarks 1. The above interrupt response times are those during stabilized operation of the internal high-speed oscillator (RSTS = 1).

2. RSTS: Bit 7 of the internal oscillation mode register (RCM)

<2> When high-speed system clock is used (normal model of C compiler)

Library Name	Interrupt Response Time (μs (Max.))			
	RSTOP = 0, RSTS = 1		RSTOP = 1	
	Entry RAM location is outside short direct addressing range	Entry RAM location is in short direct addressing range	Entry RAM location is outside short direct addressing range	Entry RAM location is in short direct addressing range
Block blank check library	179/f_{CPU} + 507	179/f_{CPU} + 407	179/f_{CPU} + 1650	179/f_{CPU} + 714
Block erase library	179/f_{CPU} + 559	179/f_{CPU} + 460	179/f_{CPU} + 1702	179/f_{CPU} + 767
Word write library	333/f_{CPU} + 1589	333/f_{CPU} + 1298	333/f_{CPU} + 2732	333/f_{CPU} + 1605
Block verify library	179/f_{CPU} + 518	179/f_{CPU} + 418	179/f_{CPU} + 1661	179/f_{CPU} + 725
Set information library	80/f_{CPU} + 370	80/f_{CPU} + 165	80/f_{CPU} + 1513	80/f_{CPU} + 472
EEPROM write library[Note]	29/f_{CPU} + 1759 333/f_{CPU} + 834	29/f_{CPU} + 1468 333/f_{CPU} + 512	29/f_{CPU} + 1759 333/f_{CPU} + 2061	29/f_{CPU} + 1468 333/f_{CPU} + 873

Note The longer value of the EEPROM write library interrupt response time becomes the Max. value, depending on the value of f_{CPU}.

Remarks 1. f_{CPU}: CPU operation clock frequency

2. RSTOP: Bit 0 of the internal oscillation mode register (RCM)

3. RSTS: Bit 7 of the internal oscillation mode register (RCM)

(1) Conventional-specification products (μPD78F05xx and 78F05xxD) (2/2)

<3> When high-speed system clock is used (static model of C compiler/assembler)

Library Name	Interrupt Response Time (μs (Max.))			
	RSTOP = 0, RSTS = 1		RSTOP = 1	
	Entry RAM location is outside short direct addressing range	Entry RAM location is in short direct addressing range	Entry RAM location is outside short direct addressing range	Entry RAM location is in short direct addressing range
Block blank check library	136/f_{CPU} + 507	136/f_{CPU} + 407	136/f_{CPU} + 1650	136/f_{CPU} + 714
Block erase library	136/f_{CPU} + 559	136/f_{CPU} + 460	136/f_{CPU} + 1702	136/f_{CPU} + 767
Word write library	272/f_{CPU} + 1589	272/f_{CPU} + 1298	272/f_{CPU} + 2732	272/f_{CPU} + 1605
Block verify library	136/f_{CPU} + 518	136/f_{CPU} + 418	136/f_{CPU} + 1661	136/f_{CPU} + 725
Set information library	72/f_{CPU} + 370	72/f_{CPU} + 165	72/f_{CPU} + 1513	72/f_{CPU} + 472
EEPROM write library[Note]	19/f_{CPU} + 1759 268/f_{CPU} + 834	19/f_{CPU} + 1468 268/f_{CPU} + 512	19/f_{CPU} + 1759 268/f_{CPU} + 2061	19/f_{CPU} + 1468 268/f_{CPU} + 873

Note The longer value of the EEPROM write library interrupt response time becomes the Max. value, depending on the value of f_{CPU}.

Remarks 1. f_{CPU}: CPU operation clock frequency

2. RSTOP: Bit 0 of the internal oscillation mode register (RCM)

3. RSTS: Bit 7 of the internal oscillation mode register (RCM)

(2) Expanded-specification products (μPD78F05xxA and 78F05xxDA) (1/2)

<1> When internal high-speed oscillation clock is used

Library Name	Interrupt Response Time (μs (Max.))			
	Normal Model of C Compiler		Static Model of C Compiler/Assembler	
	Entry RAM location is outside short direct addressing range	Entry RAM location is in short direct addressing range	Entry RAM location is outside short direct addressing range	Entry RAM location is in short direct addressing range
Block blank check library	1100.9	431.9	1095.3	426.3
Block erase library	1452.9	783.9	1447.3	778.3
Word write library	1247.2	579.2	1239.2	571.2
Block verify library	1125.9	455.9	1120.3	450.3
Set information library	906.9	312.0	905.8	311.0
EEPROM write library	1215.2	547.2	1213.9	545.9

Remarks 1. The above interrupt response times are those during stabilized operation of the internal high-speed oscillator (RSTS = 1).

2. RSTS: Bit 7 of the internal oscillation mode register (RCM)

<2> When high-speed system clock is used (normal model of C compiler)

Library Name	Interrupt Response Time (μs (Max.))			
	RSTOP = 0, RSTS = 1		RSTOP = 1	
	Entry RAM location is outside short direct addressing range	Entry RAM location is in short direct addressing range	Entry RAM location is outside short direct addressing range	Entry RAM location is in short direct addressing range
Block blank check library	179/f_{CPU} + 567	179/f_{CPU} + 246	179/f_{CPU} + 1708	179/f_{CPU} + 569
Block erase library	179/f_{CPU} + 780	179/f_{CPU} + 459	179/f_{CPU} + 1921	179/f_{CPU} + 782
Word write library	333/f_{CPU} + 763	333/f_{CPU} + 443	333/f_{CPU} + 1871	333/f_{CPU} + 767
Block verify library	179/f_{CPU} + 580	179/f_{CPU} + 259	179/f_{CPU} + 1721	179/f_{CPU} + 582
Set information library	80/f_{CPU} + 456	80/f_{CPU} + 200	80/f_{CPU} + 1598	80/f_{CPU} + 459
EEPROM write library[Note]	29/f_{CPU} + 767 333/f_{CPU} + 696	29/f_{CPU} + 447 333/f_{CPU} + 376	29/f_{CPU} + 767 333/f_{CPU} + 1838	29/f_{CPU} + 447 333/f_{CPU} + 700

Note The longer value of the EEPROM write library interrupt response time becomes the Max. value, depending on the value of f_{CPU}.

Remarks 1. f_{CPU}: CPU operation clock frequency

2. RSTOP: Bit 0 of the internal oscillation mode register (RCM)

3. RSTS: Bit 7 of the internal oscillation mode register (RCM)

(2) Expanded-specification products (μPD78F05xxA and 78F05xxDA) (2/2)

<3> When high-speed system clock is used (static model of C compiler/assembler)

Library Name	Interrupt Response Time (μs (Max.))			
	RSTOP = 0, RSTS = 1		RSTOP = 1	
	Entry RAM location is outside short direct addressing range	Entry RAM location is in short direct addressing range	Entry RAM location is outside short direct addressing range	Entry RAM location is in short direct addressing range
Block blank check library	136/f_{CPU} + 567	136/f_{CPU} + 246	136/f_{CPU} + 1708	136/f_{CPU} + 569
Block erase library	136/f_{CPU} + 780	136/f_{CPU} + 459	136/f_{CPU} + 1921	136/f_{CPU} + 782
Word write library	272/f_{CPU} + 763	272/f_{CPU} + 443	272/f_{CPU} + 1871	272/f_{CPU} + 767
Block verify library	136/f_{CPU} + 580	136/f_{CPU} + 259	136/f_{CPU} + 1721	136/f_{CPU} + 582
Set information library	72/f_{CPU} + 456	72/f_{CPU} + 200	72/f_{CPU} + 1598	72/f_{CPU} + 459
EEPROM write library[Note]	19/f_{CPU} + 767 268/f_{CPU} + 696	19/f_{CPU} + 447 268/f_{CPU} + 376	19/f_{CPU} + 767 268/f_{CPU} + 1838	19/f_{CPUv} + 447 268/f_{CPU} + 700

Note The longer value of the EEPROM write library interrupt response time becomes the Max. value, depending on the value of f_{CPU}.

Remarks 1. f_{CPU}: CPU operation clock frequency

2. RSTOP: Bit 0 of the internal oscillation mode register (RCM)

3. RSTS: Bit 7 of the internal oscillation mode register (RCM)

1.2 Features

- Minimum instruction execution time can be changed from high speed (0.1 μs: @ 20 MHz operation with high-speed system clock) to ultra low-speed (122 μs: @ 32.768 kHz operation with subsystem clock)
- General-purpose register: 8 bits × 32 registers (8 bits × 8 registers × 4 banks)
- ROM (flash memory), RAM capacities

ROM[Note]	High-Speed RAM[Note]	Expansion RAM[Note]	78K0/KB2	78K0/KC2		78K0/KD2	78K0/KE2	78K0/KF2
			30/36 pins	38/44 pins	48 pins	52 pins	64 pins	80 pins
128 KB	1 KB	6 KB	–	–	–	μPD78F0527D, 78F0527DA	μPD78F0537D, 78F0537DA	μPD78F0547D, 78F0547DA
						μPD78F0527, 78F0527A	μPD78F0537, 78F0537A	μPD78F0547 78F0547A
96 KB	1 KB	4 KB	–	–	–	μPD78F0526, 78F0526A	μPD78F0536, 78F0536A	μPD78F0546, 78F0546A
60 KB	1 KB	2 KB	–	–	μPD78F0515D, 78F0515DA	μPD78F0525, 78F0525A	μPD78F0535, 78F0535A	μPD78F0545, 78F0545A
					μPD78F0515, 78F0515A			
48 KB	1 KB	1 KB	–	–	μPD78F0514, 78F0514A	μPD78F0524, 78F0524A	μPD78F0534, 78F0534A	μPD78F0544, 78F0544A
32 KB	1 KB	–	μPD78F0503D, 78F0503DA	μPD78F0513D, 78F0513DA	μPD78F0513, 78F0513A	μPD78F0523, 78F0523A	μPD78F0533, 78F0533A	–
			μPD78F0503, 78F0503A	μPD78F0513, 78F0513A				
24 KB	1 KB	–	μPD78F0502, 78F0502A	μPD78F0512, 78F0512A	μPD78F0512, 78F0512A	μPD78F0522, 78F0522A	μPD78F0532, 78F0532A	–
16 KB	768 B	–	μPD78F0501, 78F0501A	μPD78F0511, 78F0511A	μPD78F0511, 78F0511A	μPD78F0521, 78F0521A	μPD78F0531, 78F0531A	–
8 KB	512 B	–	μPD78F0500, 78F0500A	–	–	–	–	–

Note The internal flash memory, internal high-speed RAM capacities, and internal expansion RAM capacities can be changed using the internal memory size switching register (IMS) and the internal expansion RAM size switching register (IXS). For IMS and IXS, see **27.1 Internal Memory Size Switching Register** and **27.2 Internal Expansion RAM Size Switching Register**.

- Buffer RAM: 32 bytes (can be used for transfer in CSI with automatic transmit/receive function) (78K0/KF2 only)
- On-chip single-power-supply flash memory
- Self-programming (with boot swap function)
- On-chip debug function (μPD78F05xxD and 78F05xxDA only)[Note]

Note The μPD78F05xxD and 78F05xxDA have an on-chip debug function, which is provided for development and evaluation. Do not use the on-chip debug function in products designated for mass production, because the guaranteed number of rewritable times of the flash memory may be exceeded when this function is used, and product reliability therefore cannot be guaranteed. Renesas Electronics is not liable for problems occurring when the on-chip debug function is used.

- On-chip power-on-clear (POC) circuit and low-voltage detector (LVI)
- On-chip watchdog timer (operable with the on-chip internal low-speed oscillation clock)

- On-chip 10-bit resolution A/D converter (AV_{REF} = 2.3 to 5.5 V)
- On-chip multiplier/divider (16 bits × 16 bits, 32 bits/16 bits), key interrupt function, clock output/buzzer output controller, I/O ports, timer, and serial interface
- Power supply voltage
  - Standard products, (A) grade products: V_{DD} = 1.8 to 5.5 V
  - (A2) grade products: V_{DD} = 2.7 to 5.5 V
- Operating ambient temperature
  - Standard products, (A) grade products: T_A = –40 to +85°C
  - (A2) grade products: T_A = –40 to +125°C

Remark The functions mounted depend on the product. See **1.7 Block Diagram** and **1.8 Outline of Functions**.

1.3 Applications

- Automotive equipment (compatible with (A) and (A2) grade products)
  - System control for body electricals (power windows, keyless entry reception, etc.)
  - Sub-microcontrollers for control
- Car audio
- AV equipment, home audio
- PC peripheral equipment (keyboards, etc.)
- Household electrical appliances
  - Air conditioners
  - Microwave ovens, electric rice cookers
- Industrial equipment
  - Pumps
  - Vending machines
  - FA (Factory Automation)

1.4 Ordering Information

[Part Number]

μPD78F05xy X X XX (X) - XXX - XX

	Semiconductor	
A	Lead-free	Product contains no lead in any area
AX, G		Product contains no lead in any area (Terminal finish is Ni/Pd/Au plating)

	Quality Grade
None	Standard (T_A = −40 to +85°C)
(A), A	Special (T_A = −40 to +85°C)
(A2), A2	Special (T_A = −40 to +125°C)

		Package Type
50y (KB2)	MC-5A4	30-pin plastic SSOP (7.62 mm (300))
	MC-CAB	
	FC-AA3	36-pin plastic FLGA (4x4)
51y (KC2)	MC-GAA	38-pin plastic SSOP (7.62 mm (300))
	GB-UES	44-pin plastic LQFP (10x10)
	GB-GAF	
	GA-8EU	48-pin plastic LQFP (fine pitch) (7x7)
	GA-GAM	
52y (KD2)	GB-UET	52-pin plastic LQFP (10x10)
	GB-GAG	
53y (KE2)	GB-UEU	64-pin plastic LQFP (fine pitch) (10x10)
	GB-GAH	
	GC-UBS	64-pin plastic LQFP (14x14)
	GC-GAL	
	GK-UET	64-pin plastic LQFP (12x12)
	GK-GAJ	
	GA-9EV	64-pin plastic TQFP (fine pitch) (7x7)
	GA-HAB	
	FC-AA1	64-pin plastic FLGA (5x5)
	F1-AA2	64-pin plastic FBGA (4x4)
54y (KF2)	GC-UBT	80-pin plastic LQFP (14x14)
	GC-GAD	
	GK-8EU	80-pin plastic LQFP (fine pitch) (12x12)
	GK-GAK	

	Product Type
None	Conventional-specification products
A	Expanded-specification products

	On-chip Debug Function
None	Not mounted
D	Mounted

	High-speed RAM Capacity	Expansion RAM Capacity	Flash Memory Capacity
5x0	512 bytes	–	8 KB
5x1	768 bytes	–	16 KB
5x2	1 KB	–	24 KB
5x3	1 KB	–	32 KB
5x4	1 KB	1 KB	48 KB
5x5	1 KB	2 KB	60 KB
5x6	1 KB	4 KB	96 KB
5x7	1 KB	6 KB	128 KB

	Product Type
F	Flash memory version

Please refer to "Quality Grades on NEC Semiconductor Devices" (Document No. C11531E) published by Renesas Electronics to know the specification of quality grade on the devices and its recommended applications.

[List of Part Number]

(1/6)

78K0/Kx2 Microcontrollers	Package	Product type	Quality grace	Part Number
78K0/KB2	30-pin plastic SSOP (7.62 mm (300))	Conventional-specification products	Standard products	μPD78F0500MC-5A4-A, 78F0501MC-5A4-A, 78F0502MC-5A4-A, 78F0503MC-5A4-A, 78F0503DMC-5A4-A[Note]
			(A) grade products	μPD78F0500MC(A)-CAB-AX, 78F0501MC(A)-CAB-AX, 78F0502MC(A)-CAB-AX, 78F0503MC(A)-CAB-AX
			(A2) grade products	μPD78F0500MC(A2)-CAB-AX, 78F0501MC(A2)-CAB-AX, 78F0502MC(A2)-CAB-AX, 78F0503MC(A2)-CAB-AX
		Expanded-specification products	Standard products	μPD78F0500AMC-CAB-AX, 78F0501AMC-CAB-AX, 78F0502AMC-CAB-AX, 78F0503AMC-CAB-AX, 78F0503DAMC-CAB-AX[Note]
			(A) grade products	μPD78F0500AMCA-CAB-G, 78F0501AMCA-CAB-G, 78F0502AMCA-CAB-G, 78F0503AMCA-CAB-G
			(A2) grade products	μPD78F0500AMCA2-CAB-G, 78F0501AMCA2-CAB-G, 78F0502AMCA2-CAB-G, 78F0503AMCA2-CAB-G
	36-pin plastic FLGA (4x4)	Conventional-specification products	Standard products	μPD78F0500FC-AA3-A, 78F0501FC-AA3-A, 78F0502FC-AA3-A, 78F0503FC-AA3-A, 78F0503DFC-AA3-A[Note]
		Expanded-specification products	Standard products	μPD78F0500AFC-AA3-A, 78F0501AFC-AA3-A, 78F0502AFC-AA3-A, 78F0503AFC-AA3-A, 78F0503DAFC-AA3-A[Note]
78K0/KC2	38-pin plastic SSOP (7.62 mm (300))	Expanded-specification products	Standard products	μPD78F0511AMC-GAA-AX, 78F0512AMC-GAA-AX, 78F0513AMC-GAA-AX, 78F0513DAMC-GAA-AX[Note]
			(A) grade products	μPD78F0511AMCA-GAA-G, 78F0512AMCA-GAA-G, 78F0513AMCA-GAA-G
			(A2) grade products	μPD78F0511AMCA2-GAA-G, 78F0512AMCA2-GAA-G, 78F0513AMCA2-GAA-G
	44-pin plastic LQFP (10x10)	Conventional-specification products	Standard products	μPD78F0511GB-UES-A, 78F0512GB-UES-A, 78F0513GB-UES-A, 78F0513DGB-UES-A[Note]
			(A) grade products	μPD78F0511GB(A)-GAF-AX, 78F0512GB(A)-GAF-AX, 78F0513GB(A)-GAF-AX
			(A2) grade products	μPD78F0511GB(A2)-GAF-AX, 78F0512GB(A2)-GAF-AX, 78F0513GB(A2)-GAF-AX
		Expanded-specification products	Standard products	μPD78F0511AGB-GAF-AX, 78F0512AGB-GAF-AX, 78F0513AGB-GAF-AX, 78F0513DAGB-GAF-AX[Note]
			(A) grade products	μPD78F0511AGBA-GAF-G, 78F0512AGBA-GAF-G, 78F0513AGBA-GAF-G
			(A2) grade products	μPD78F0511AGBA2-GAF-G, 78F0512AGBA2-GAF-G, 78F0513AGBA2-GAF-G

Note The μPD78F0503D, 78F0503DA, 78F0513D, and 78F0513DA have an on-chip debug function, which is provided for development and evaluation. Do not use the on-chip debug function in products designated for mass production, because the guaranteed number of rewritable times of the flash memory may be exceeded when this function is used, and product reliability therefore cannot be guaranteed. Renesas Electronics is not liable for problems occurring when the on-chip debug function is used.

(2/6)

78K0/Kx2 Microcontrollers	Package	Product type	Quality grace	Part Number
78K0/KC2	48-pin plastic LQFP (fine pitch) (7x7)	Conventional-specification products	Standard products	μPD78F0511GA-8EU-A, 78F0512GA-8EU-A, 78F0513GA-8EU-A, 78F0514GA-8EU-A, 78F0515GA-8EU-A, 78F0515DGA-8EU-A[Note]
			(A) grade products	μPD78F0511GA(A)-GAM-AX, 78F0512GA(A)-GAM-AX, 78F0513GA(A)-GAM-AX, 78F0514GA(A)-GAM-AX, 78F0515GA(A)-GAM-AX
			(A2) grade products	μPD78F0511GA(A2)-GAM-AX, 78F0512GA(A2)-GAM-AX, 78F0513GA(A2)-GAM-AX, 78F0514GA(A2)-GAM-AX, 78F0515GA(A2)-GAM-AX
		Expanded-specification products	Standard products	μPD78F0511AGA-GAM-AX, 78F0512AGA-GAM-AX, 78F0513AGA-GAM-AX, 78F0514AGA-GAM-AX, 78F0515AGA-GAM-AX, 78F0515DAGA-GAM-AX[Note]
			(A) grade products	μPD78F0511AGAA-GAM-G, 78F0512AGAA-GAM-G, 78F0513AGAA-GAM-G, 78F0514AGAA-GAM-G, 78F0515AGAA-GAM-G
			(A2) grade products	μPD78F0511AGAA2-GAM-G, 78F0512AGAA2-GAM-G, 78F0513AGAA2-GAM-G, 78F0514AGAA2-GAM-G, 78F0515AGAA2-GAM-G
78K0/KD2	52-pin plastic LQFP (10x10)	Conventional-specification products	Standard products	μPD78F0521GB-UET-A, 78F0522GB-UET-A, 78F0523GB-UET-A, 78F0524GB-UET-A, 78F0525GB-UET-A, 78F0526GB-UET-A, 78F0527GB-UET-A, 78F0527DGB-UET-A[Note]
			(A) grade products	μPD78F0521GB(A)-GAG-AX, 78F0522GB(A)-GAG-AX, 78F0523GB(A)-GAG-AX, 78F0524GB(A)-GAG-AX, 78F0525GB(A)-GAG-AX, 78F0526GB(A)-GAG-AX, 78F0527GB(A)-GAG-AX
			(A2) grade products	μPD78F0521GB(A2)-GAG-AX, 78F0522GB(A2)-GAG-AX, 78F0523GB(A2)-GAG-AX, 78F0524GB(A2)-GAG-AX, 78F0525GB(A2)-GAG-AX, 78F0526GB(A2)-GAG-AX, 78F0527GB(A2)-GAG-AX
		Expanded-specification products	Standard products	μPD78F0521AGB-GAG-AX, 78F0522AGB-GAG-AX, 78F0523AGB-GAG-AX, 78F0524AGB-GAG-AX, 78F0525AGB-GAG-AX, 78F0526AGB-GAG-AX, 78F0527AGB-GAG-AX, 78F0527DAGB-GAG-AX[Note]
			(A) grade products	μPD78F0521AGBA-GAG-G, 78F0522AGBA-GAG-G, 78F0523AGBA-GAG-G, 78F0524AGBA-GAG-G, 78F0525AGBA-GAG-G, 78F0526AGBA-GAG-G, 78F0527AGBA-GAG-G
			(A2) grade products	μPD78F0521AGBA2-GAG-G, 78F0522AGBA2-GAG-G, 78F0523AGBA2-GAG-G, 78F0524AGBA2-GAG-G, 78F0525AGBA2-GAG-G, 78F0526AGBA2-GAG-G, 78F0527AGBA2-GAG-G

Note The μPD78F0515D, 78F0515DA, 78F0527D, and 78F0527DA have an on-chip debug function, which is provided for development and evaluation. Do not use the on-chip debug function in products designated for mass production, because the guaranteed number of rewritable times of the flash memory may be exceeded when this function is used, and product reliability therefore cannot be guaranteed. Renesas Electronics is not liable for problems occurring when the on-chip debug function is used.

(3/6)

78K0/Kx2 Microcontrollers	Package	Product type	Quality grace	Part Number
78K0/KE2	64-pin plastic LQFP (fine pitch) (10x10)	Conventional-specification products	Standard products	μPD78F0531GB-UEU-A, 78F0532GB-UEU-A, 78F0533GB-UEU-A, 78F0534GB-UEU-A, 78F0535GB-UEU-A, 78F0536GB-UEU-A, 78F0537GB-UEU-A, 78F0537DGB-UEU-A[Note]
			(A) grade products	μPD78F0531GB(A)-GAH-AX, 78F0532GB(A)-GAH-AX, 78F0533GB(A)-GAH-AX, 78F0534GB(A)-GAH-AX, 78F0535GB(A)-GAH-AX, 78F0536GB(A)-GAH-AX, 78F0537GB(A)-GAH-AX
			(A2) grade products	μPD78F0531GB(A2)-GAH-AX, 78F0532GB(A2)-GAH-AX, 78F0533GB(A2)-GAH-AX, 78F0534GB(A2)-GAH-AX, 78F0535GB(A2)-GAH-AX, 78F0536GB(A2)-GAH-AX, 78F0537GB(A2)-GAH-AX
		Expanded-specification products	Standard products	μPD78F0531AGB-GAH-AX, 78F0532AGB-GAH-AX, 78F0533AGB-GAH-AX, 78F0534AGB-GAH-AX, 78F0535AGB-GAH-AX, 78F0536AGB-GAH-AX, 78F0537AGB-GAH-AX, 78F0537DAGB-GAH-AX[Note]
			(A) grade products	μPD78F0531AGBA-GAH-G, 78F0532AGBA-GAH-G, 78F0533AGBA-GAH-G, 78F0534AGBA-GAH-G, 78F0535AGBA-GAH-G, 78F0536AGBA-GAH-G, 78F0537AGBA-GAH-G
			(A2) grade products	μPD78F0531AGBA2-GAH-G, 78F0532AGBA2-GAH-G, 78F0533AGBA2-GAH-G, 78F0534AGBA2-GAH-G, 78F0535AGBA2-GAH-G, 78F0536AGBA2-GAH-G, 78F0537AGBA2-GAH-G

Note The μPD78F0537D and 78F0537DA have an on-chip debug function, which is provided for development and evaluation. Do not use the on-chip debug function in products designated for mass production, because the guaranteed number of rewritable times of the flash memory may be exceeded when this function is used, and product reliability therefore cannot be guaranteed. Renesas Electronics is not liable for problems occurring when the on-chip debug function is used.

(4/6)

78K0/Kx2 Microcontrollers	Package	Product type	Quality grace	Part Number
78K0/KE2	64-pin plastic LQFP (14x14)	Conventional-specification products	Standard products	μPD78F0531GC-UBS-A, 78F0532GC-UBS-A, 78F0533GC-UBS-A, 78F0534GC-UBS-A, 78F0535GC-UBS-A, 78F0536GC-UBS-A, 78F0537GC-UBS-A, 78F0537DGC-UBS-A[Note]
			(A) grade products	μPD78F0531GC(A)-GAL-AX, 78F0532GC(A)-GAL-AX, 78F0533GC(A)-GAL-AX, 78F0534GC(A)-GAL-AX, 78F0535GC(A)-GAL-AX, 78F0536GC(A)-GAL-AX, 78F0537GC(A)-GAL-AX
			(A2) grade products	μPD78F0531GC(A2)-GAL-AX, 78F0532GC(A2)-GAL-AX, 78F0533GC(A2)-GAL-AX, 78F0534GC(A2)-GAL-AX, 78F0535GC(A2)-GAL-AX, 78F0536GC(A2)-GAL-AX, 78F0537GC(A2)-GAL-AX
		Expanded-specification products	Standard products	μPD78F0531AGC-GAL-AX, 78F0532AGC-GAL-AX, 78F0533AGC-GAL-AX, 78F0534AGC-GAL-AX, 78F0535AGC-GAL-AX, 78F0536AGC-GAL-AX, 78F0537AGC-GAL-AX, 78F0537DAGC-GAL-AX[Note]
			(A) grade products	μPD78F0531AGCA-GAL-G, 78F0532AGCA-GAL-G, 78F0533AGCA-GAL-G, 78F0534AGCA-GAL-G, 78F0535AGCA-GAL-G, 78F0536AGCA-GAL-G, 78F0537AGCA-GAL-G
			(A2) grade products	μPD78F0531AGCA2-GAL-G, 78F0532AGCA2-GAL-G, 78F0533AGCA2-GAL-G, 78F0534AGCA2-GAL-G, 78F0535AGCA2-GAL-G, 78F0536AGCA2-GAL-G, 78F0537AGCA2-GAL-G

Note The μPD78F0537D and 78F0537DA have an on-chip debug function, which is provided for development and evaluation. Do not use the on-chip debug function in products designated for mass production, because the guaranteed number of rewritable times of the flash memory may be exceeded when this function is used, and product reliability therefore cannot be guaranteed. Renesas Electronics is not liable for problems occurring when the on-chip debug function is used.

(5/6)

78K0/Kx2 Microcontrollers	Package	Product type	Quality grace	Part Number
78K0/KE2	64-pin plastic LQFP (12x12)	Conventional-specification products	Standard products	μPD78F0531GK-UET-A, 78F0532GK-UET-A, 78F0533GK-UET-A, 78F0534GK-UET-A, 78F0535GK-UET-A, 78F0536GK-UET-A, 78F0537GK-UET-A, 78F0537DGK-UET-A[Note]
			(A) grade products	μPD78F0531GK(A)-GAJ-AX, 78F0532GK(A)-GAJ-AX, 78F0533GK(A)-GAJ-AX, 78F0534GK(A)-GAJ-AX, 78F0535GK(A)-GAJ-AX, 78F0536GK(A)-GAJ-AX, 78F0537GK(A)-GAJ-AX
			(A2) grade products	μPD78F0531GK(A2)-GAJ-AX, 78F0532GK(A2)-GAJ-AX, 78F0533GK(A2)-GAJ-AX, 78F0534GK(A2)-GAJ-AX, 78F0535GK(A2)-GAJ-AX, 78F0536GK(A2)-GAJ-AX, 78F0537GK(A2)-GAJ-AX
		Expanded-specification products	Standard products	μPD78F0531AGK-GAJ-AX, 78F0532AGK-GAJ-AX, 78F0533AGK-GAJ-AX, 78F0534AGK-GAJ-AX, 78F0535AGK-GAJ-AX, 78F0536AGK-GAJ-AX, 78F0537AGK-GAJ-AX, 78F0537DAGK-GAJ-AX[Note]
			(A) grade products	μPD78F0531AGKA-GAJ-G, 78F0532AGKA-GAJ-G, 78F0533AGKA-GAJ-G, 78F0534AGKA-GAJ-G, 78F0535AGKA-GAJ-G, 78F0536AGKA-GAJ-G, 78F0537AGKA-GAJ-G
			(A2) grade products	μPD78F0531AGKA2-GAJ-G, 78F0532AGKA2-GAJ-G, 78F0533AGKA2-GAJ-G, 78F0534AGKA2-GAJ-G, 78F0535AGKA2-GAJ-G, 78F0536AGKA2-GAJ-G, 78F0537AGKA2-GAJ-G
	64-pin plastic TQFP (fine pitch) (7x7)	Conventional-specification products	Standard products	μPD78F0531GA-9EV-A, 78F0532GA-9EV-A, 78F0533GA-9EV-A, 78F0534GA-9EV-A, 78F0535GA-9EV-A, 78F0536GA-9EV-A, 78F0537GA-9EV-A, 78F0537DGA-9EV-A[Note]
		Expanded-specification products	Standard products	μPD78F0531AGA-HAB-AX, 78F0532AGA-HAB-AX, 78F0533AGA-HAB-AX, 78F0534AGA-HAB-AX, 78F0535AGA-HAB-AX, 78F0536AGA-HAB-AX, 78F0537AGA-HAB-AX, 78F0537DAGA-HAB-AX[Note]

Note The μPD78F0537D and 78F0537DA have an on-chip debug function, which is provided for development and evaluation. Do not use the on-chip debug function in products designated for mass production, because the guaranteed number of rewritable times of the flash memory may be exceeded when this function is used, and product reliability therefore cannot be guaranteed. Renesas Electronics is not liable for problems occurring when the on-chip debug function is used.

(6/6)

78K0/Kx2 Microcontrollers	Package	Product type	Quality grace	Part Number
78K0/KE2	64-pin plastic FLGA (5x5)	Conventional-specification products	Standard products	μPD78F0531FC-AA1-A, 78F0532FC-AA1-A, 78F0533FC-AA1-A, 78F0534FC-AA1-A, 78F0535FC-AA1-A, 78F0536FC-AA1-A, 78F0537FC-AA1-A, 78F0537DFC-AA1-A[Note]
		Expanded-specification products	Standard products	μPD78F0531AFC-AA1-A, 78F0532AFC-AA1-A, 78F0533AFC-AA1-A, 78F0534AFC-AA1-A, 78F0535AFC-AA1-A, 78F0536AFC-AA1-A, 78F0537AFC-AA1-A, 78F0537DAFC-AA1-A[Note]
<R>	64-pin plastic FBGA (4x4)	Expanded-specification products	Standard products	μPD78F0531AF1-AA2-A, 78F0532AF1-AA2-A, 78F0533AF1-AA2-A, 78F0534AF1-AA2-A, 78F0535AF1-AA2-A, 78F0536AF1-AA2-A, 78F0537AF1-AA2-A, 78F0537DAF1-AA2-A[Note]
78K0/KF2	80-pin plastic LQFP (14x14)	Conventional-specification products	Standard products	μPD78F0544GC-UBT-A, 78F0545GC-UBT-A, 78F0546GC-UBT-A, 78F0547GC-UBT-A, 78F0547DGC-UBT-A[Note]
			(A) grade products	μPD78F0544GC(A)-GAD-AX, 78F0545GC(A)-GAD-AX, 78F0546GC(A)-GAD-AX, 78F0547GC(A)-GAD-AX
			(A2) grade products	μPD78F0544GC(A2)-GAD-AX, 78F0545GC(A2)-GAD-AX, 78F0546GC(A2)-GAD-AX, 78F0547GC(A2)-GAD-AX
		Expanded-specification products	Standard products	μPD78F0544AGC-GAD-AX, 78F0545AGC-GAD-AX, 78F0546AGC-GAD-AX, 78F0547AGC-GAD-AX, 78F0547DAGC-GAD-AX[Note]
			(A) grade products	μPD78F0544AGCA-GAD-G, 78F0545AGCA-GAD-G, 78F0546AGCA-GAD-G, 78F0547AGCA-GAD-G
			(A2) grade products	μPD78F0544AGCA2-GAD-G, 78F0545AGCA2-GAD-G, 78F0546AGCA2-GAD-G, 78F0547AGCA2-GAD-G
	80-pin plastic LQFP (fine pitch) (12x12)	Conventional-specification products	Standard products	μPD78F0544GK-8EU-A, 78F0545GK-8EU-A, 78F0546GK-8EU-A, 78F0547GK-8EU-A, 78F0547DGK-8EU-A[Note]
			(A) grade products	μPD78F0544GK(A)-GAK-AX, 78F0545GK(A)-GAK-AX, 78F0546GK(A)-GAK-AX, 78F0547GK(A)-GAK-AX
			(A2) grade products	μPD78F0544GK(A2)-GAK-AX, 78F0545GK(A2)-GAK-AX, 78F0546GK(A2)-GAK-AX, 78F0547GK(A2)-GAK-AX
		Expanded-specification products	Standard products	μPD78F0544AGK-GAK-AX, 78F0545AGK-GAK-AX, 78F0546AGK-GAK-AX, 78F0547AGK-GAK-AX, 78F0547DAGK-GAK-AX[Note]
			(A) grade products	μPD78F0544AGKA-GAK-G, 78F0545AGKA-GAK-G, 78F0546AGKA-GAK-G, 78F0547AGKA-GAK-G
			(A2) grade products	μPD78F0544AGKA2-GAK-G, 78F0545AGKA2-GAK-G, 78F0546AGKA2-GAK-G, 78F0547AGKA2-GAK-G

Note The μPD78F0537D, 78F0537DA, 78F0547D, and 78F0547DA have an on-chip debug function, which is provided for development and evaluation. Do not use the on-chip debug function in products designated for mass production, because the guaranteed number of rewritable times of the flash memory may be exceeded when this function is used, and product reliability therefore cannot be guaranteed. Renesas Electronics is not liable for problems occurring when the on-chip debug function is used.

1.5 Pin Configuration (Top View)

1.5.1 78K0/KB2

- 30-pin plastic SSOP (7.62 mm (300))

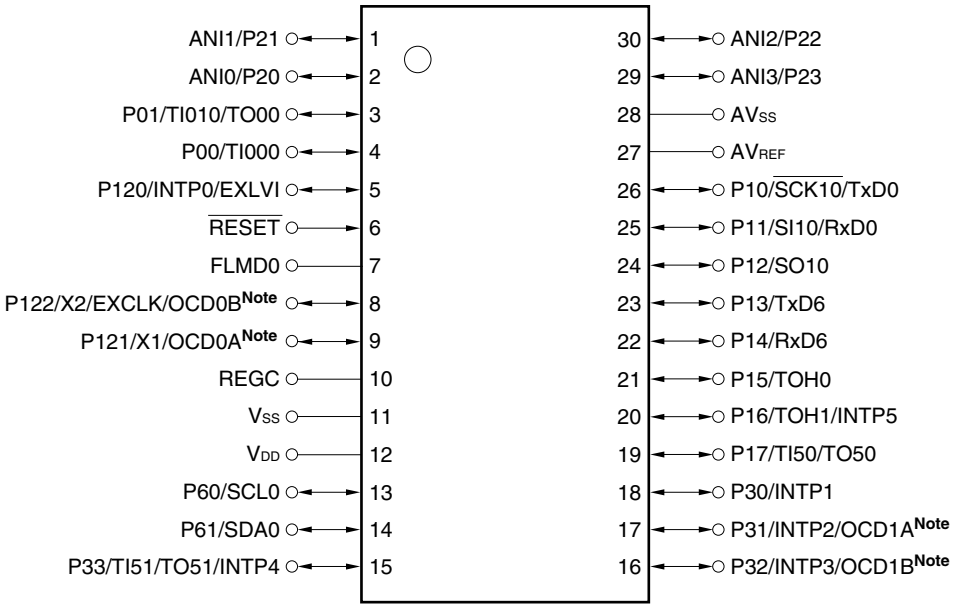

Note Products with on-chip debug function only

Cautions 1. Make AVSS the same potential as VSS.

2. Connect the REGC pin to VSS via a capacitor (0.47 to 1 μF).

3. ANI0/P20 to ANI3/P23 are set in the analog input mode after release of reset.

Remark For pin identification, see **1.6 Pin Identification**.

- 36-pin plastic FLGA (4x4)

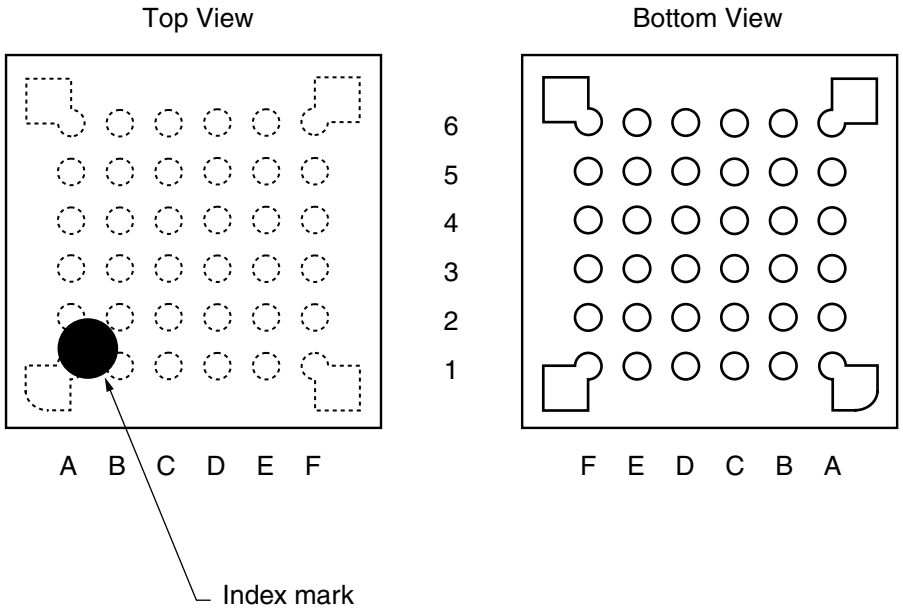

Pin No.	Pin Name	Pin No.	Pin Name	Pin No.	Pin Name
A1	NC[Note 1]	C1	P17/TI50/TO50	E1	AV_{REF}
A2	P32/INTP3/OCD1B[Note 2]	C2	P14/RxD6	E2	AV_{SS}
A3	P30/INTP1	C3	P13/TxD6	E3	ANI2/P22
A4	P61/SDA0	C4	P00/TI000	E4	ANI1/P21
A5	P33/TI51/TO51/INTP4	C5	V_{DD}	E5	FLMD0
A6	NC[Note 1]	C6	P121/X1/OCD0A[Note 2]	E6	$\overline{\text{RESET}}$
B1	P31/INTP2/OCD1A[Note 2]	D1	P11/SI10/RxD0	F1	NC[Note 1]
B2	P16/TOH1/INTP5	D2	P12/SO10	F2	ANI3/P23
B3	P15/TOH0	D3	P10/$\overline{\text{SCK10}}$/TxD0	F3	ANI0/P20
B4	P60/SCL0	D4	REGC	F4	P01/TI010/TO00
B5	EV_{DD}	D5	V_{SS}	F5	P120/INTP0/EXLVI
B6	EV_{SS}	D6	P122/X2/EXCLK/ OCD0B[Note 2]	F6	NC[Note 1]

Notes 1. It is recommended to connect NC to V_{SS}.

2. Products with on-chip debug function only

Cautions 1. Make AV_{SS} and EV_{SS} the same potential as V_{SS}.

2. Make EV_{DD} the same potential as V_{DD}.

3. Connect the REGC pin to V_{SS} via a capacitor (0.47 to 1 μF).

4. ANI0/P20 to ANI3/P23 are set in the analog input mode after release of reset.

Remark For pin identification, see **1.6 Pin Identification**.

1.5.2 78K0/KC2

- 38-pin plastic SSOP (7.62 mm (300))

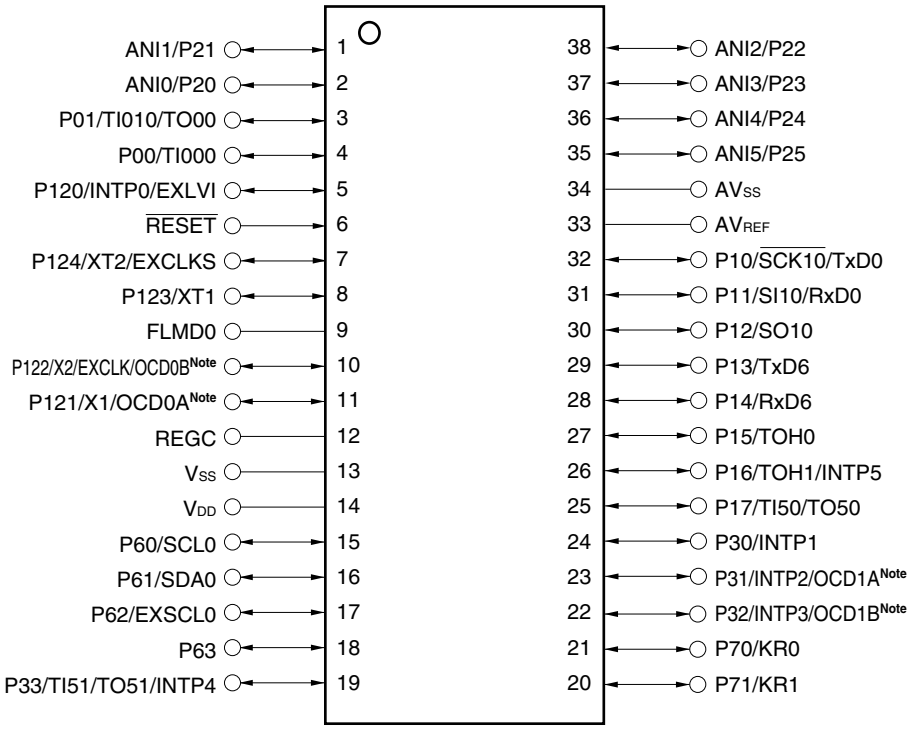

Note Products with on-chip debug function only

Cautions 1. Make AVSS the same potential as VSS.

2. Connect the REGC pin to VSS via a capacitor (0.47 to 1 μF).

3. ANI0/P20 to ANI5/P25 are set in the analog input mode after release of reset.

Remark For pin identification, see **1.6 Pin Identification**.

- 44-pin plastic LQFP (10 × 10)

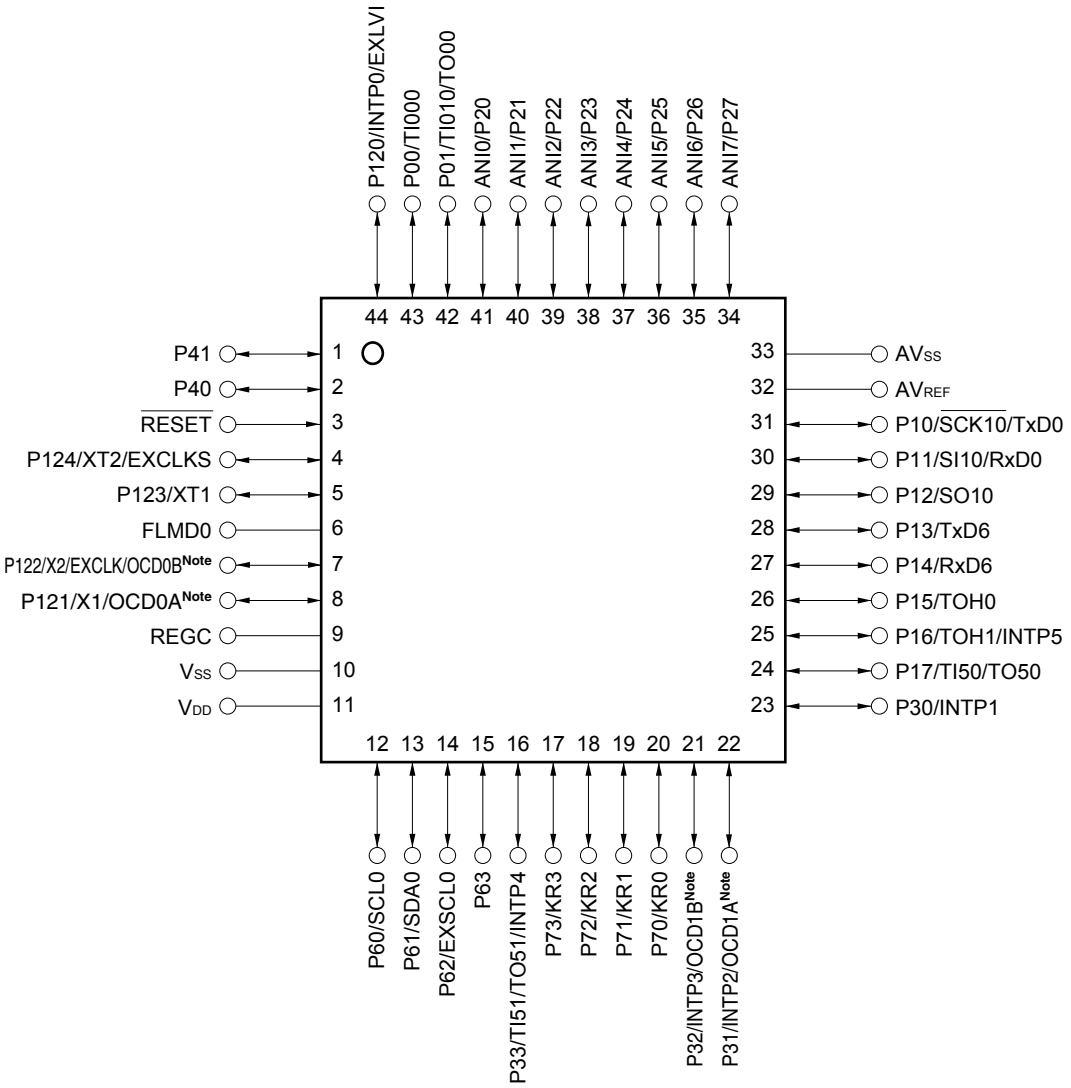

Note Products with on-chip debug function only

Cautions 1. Make AVSS the same potential as VSS.

2. Connect the REGC pin to VSS via a capacitor (0.47 to 1 μF).

3. ANI0/P20 to ANI7/P27 are set in the analog input mode after release of reset.

Remark For pin identification, see **1.6 Pin Identification**.

- 48-pin plastic LQFP (fine pitch) (7 × 7)

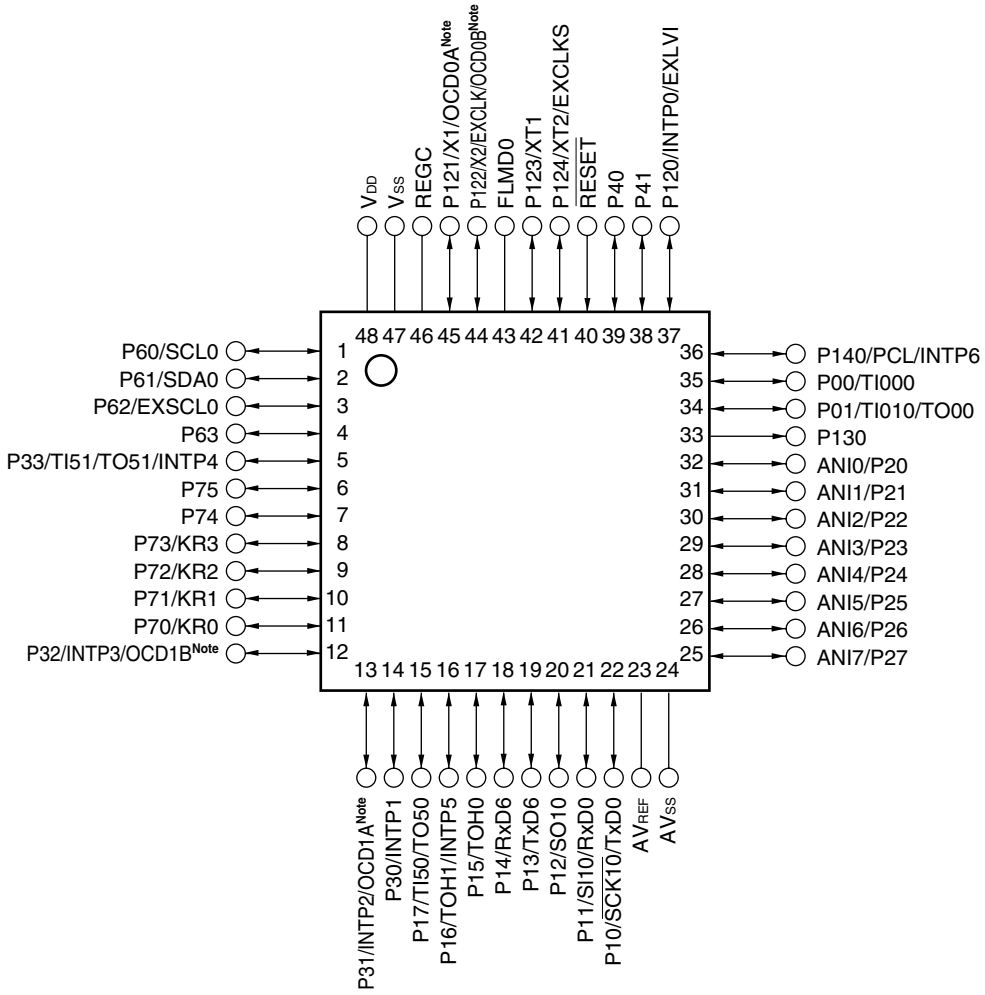

Note Products with on-chip debug function only

Cautions 1. Make AVSS the same potential as VSS.

2. Connect the REGC pin to VSS via a capacitor (0.47 to 1 μF).

3. ANI0/P20 to ANI7/P27 are set in the analog input mode after release of reset.

Remark For pin identification, see **1.6 Pin Identification**.

1.5.3 78K0/KD2

- 52-pin plastic LQFP (10 × 10)

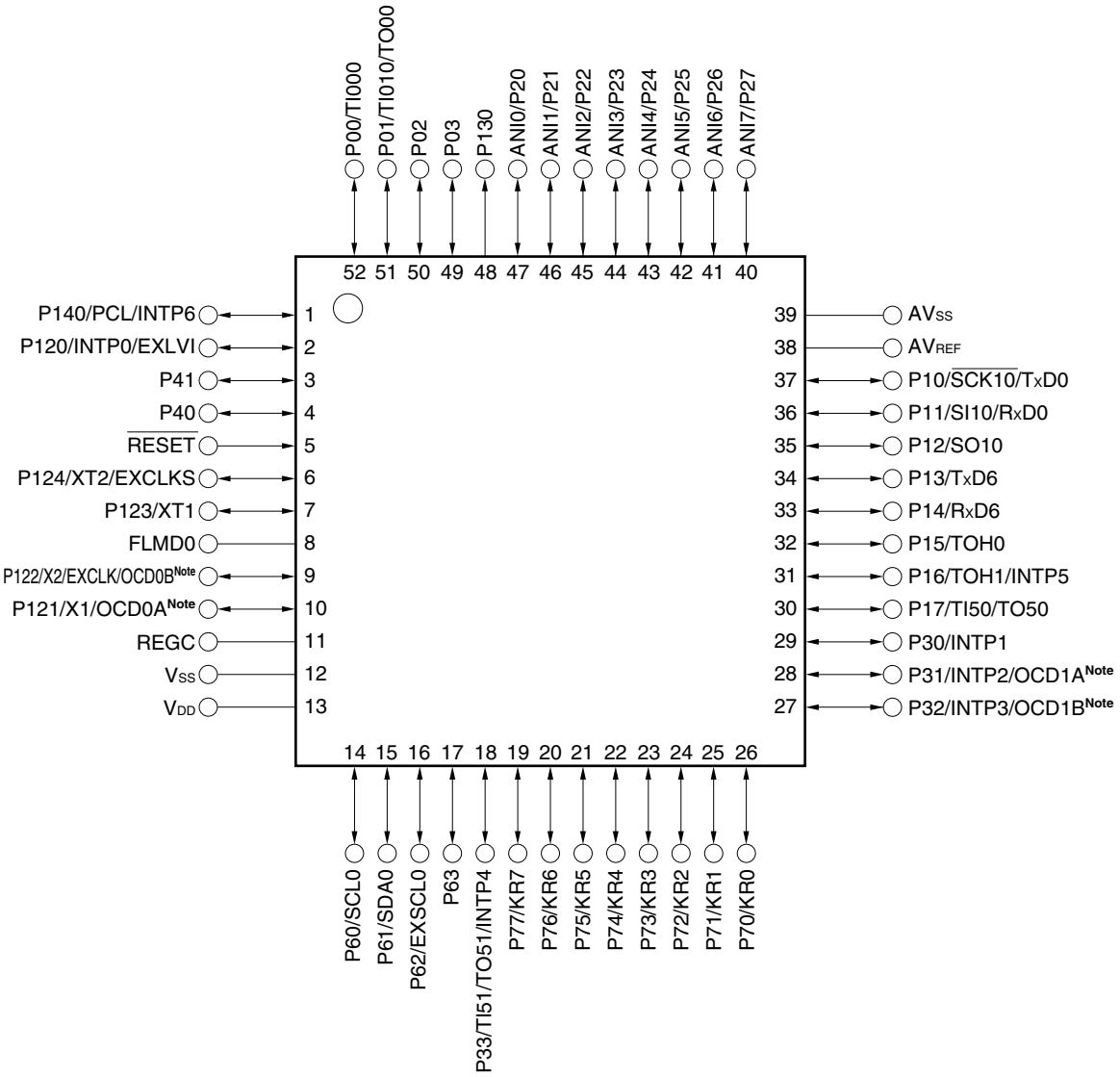

Note Products with on-chip debug function only

Cautions 1. Make AVSS the same potential as VSS.

2. Connect the REGC pin to VSS via a capacitor (0.47 to 1 μF).

3. ANI0/P20 to ANI7/P27 are set in the analog input mode after release of reset.

Remark For pin identification, see **1.6 Pin Identification**.

1.5.4 78K0/KE2

- 64-pin plastic LQFP (fine pitch) (10 × 10)
- 64-pin plastic LQFP (14 × 14)
- 64-pin plastic LQFP (12 × 12)
- 64-pin plastic TQFP (fine pitch) (7 × 7)

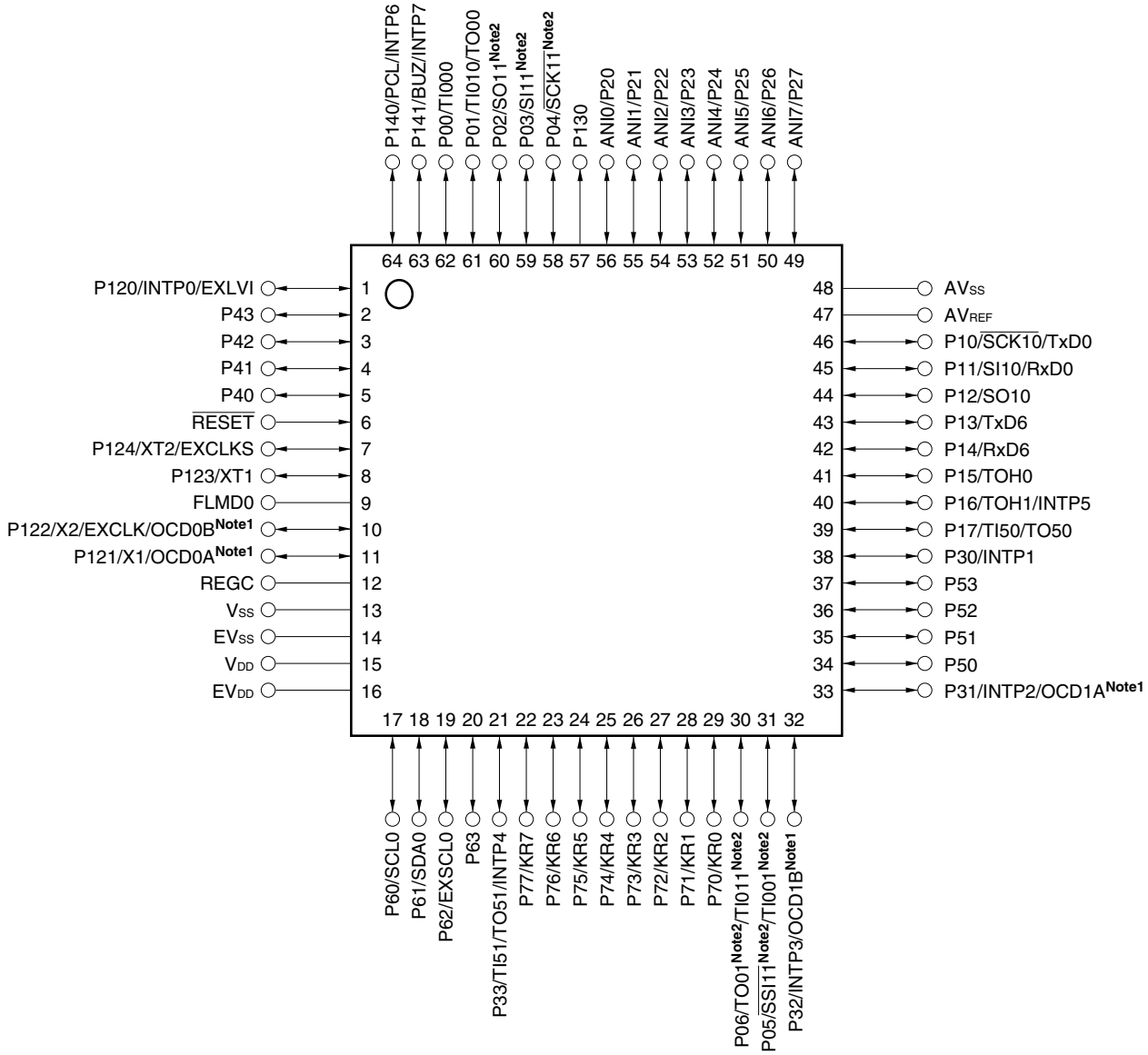

Notes 1. Products with on-chip debug function only

2. Products whose flash memory is at least 48 KB only

Cautions 1. Make AVSS and EVSS the same potential as VSS.

2. Make EVDD the same potential as VDD.

3. Connect the REGC pin to VSS via a capacitor (0.47 to 1 μF).

4. ANI0/P20 to ANI7/P27 are set in the analog input mode after release of reset.

Remark For pin identification, see **1.6 Pin Identification**.

- 64-pin plastic FLGA (5 × 5)
- 64-pin plastic FBGA (4 × 4)

Top View

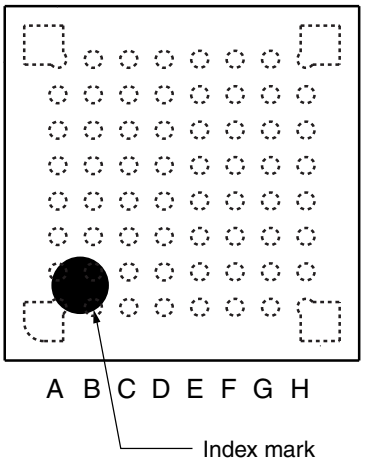

Bottom View

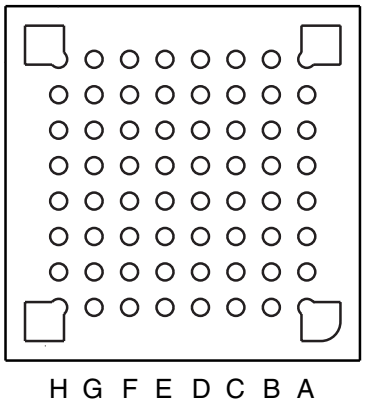

Pin No.	Pin Name	Pin No.	Pin Name	Pin No.	Pin Name	Pin No.	Pin Name
A1	AVSS	C1	ANI4/P24	E1	P130	G1	P141/BUZ/INTP7
A2	AVREF	C2	ANI3/P23	E2	ANI0/P20	G2	P140/PCL/INTP6
A3	P11/SI10/RxD0	C3	ANI7/P27	E3	P03/SI11 Note 2	G3	P43
A4	P13/TxD6	C4	P10/$\overline{\text{SCK10}}$/TxD0	E4	P42	G4	$\overline{\text{RESET}}$
A5	P16/TOH1/INTP5	C5	P17/TI50/TO50	E5	P77/KR7	G5	REGC
A6	P53	C6	P30/INTP1	E6	P33/TI51/TO51/INTP4	G6	VSS
A7	P51	C7	P31/INTP2/ OCD1A Note 1	E7	P74/KR4	G7	VDD
A8	P32/INTP3/ OCD1B Note 1	C8	P06/TO01 Note 2/ TI011 Note 2	E8	P76/KR6	G8	P61/SDA0
B1	ANI5/P25	D1	ANI1/P21	F1	P01/TI010/TO00	H1	P120/INTP0/EXLVI
B2	ANI6/P26	D2	ANI2/P22	F2	P00/TI000	H2	P124/XT2/EXCLKS
B3	P12/SO10	D3	P04/$\overline{\text{SCK11}}$ Note 2	F3	P02/SO11 Note 2	H3	P123/XT1
B4	P15/TOH0	D4	P72/KR2	F4	P41	H4	FLMD0
B5	P14/RxD6	D5	P70/KR0	F5	P40	H5	P122/X2/EXCLK/ OCD0B Note 1
B6	P52	D6	P71/KR1	F6	P60/SCL0	H6	P121/X1/OCD0A Note 1
B7	P50	D7	P75/KR5	F7	P62/EXSCL0	H7	EVSS
B8	P05/$\overline{\text{SSI11}}$ Note 2/ TI001 Note 2	D8	P73/KR3	F8	P63	H8	EVDD

Notes 1. Product with on-chip debug function only

2. Products whose flash memory is at least 48 KB only

Cautions 1. Make AVSS and EVSS the same potential as VSS.

2. Make EVDD the same potential as VDD.

3. Connect the REGC pin to VSS via a capacitor (0.47 to 1 μF).

4. ANI0/P20 to ANI7/P27 are set in the analog input mode after release of reset.

Remark For pin identification, see **1.6 Pin Identification**.

1.5.5 78K0/KF2

- 80-pin plastic LQFP (14 × 14)
- 80-pin plastic LQFP (fine pitch) (12 × 12)

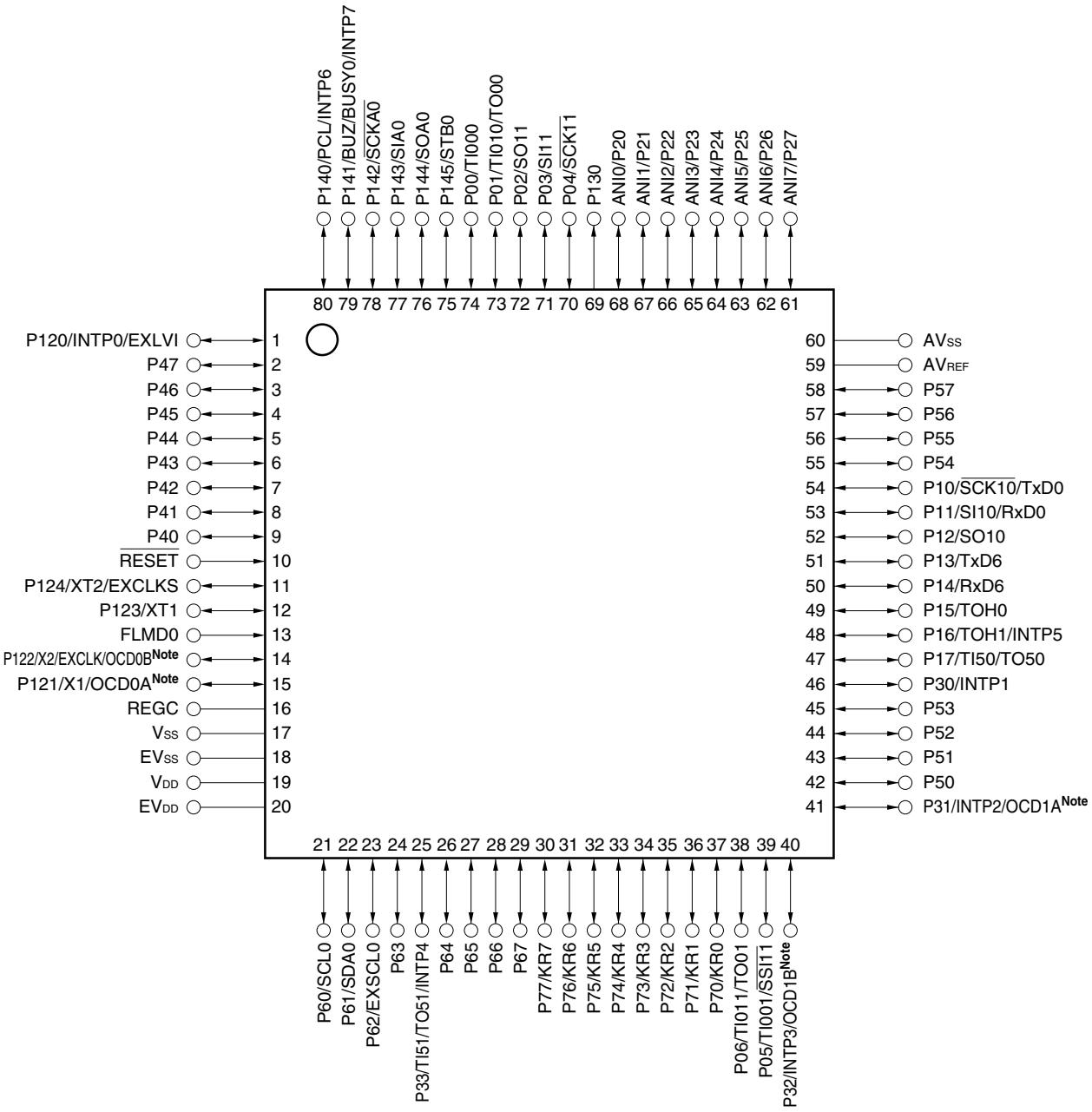

Note Products with on-chip debug function only

Cautions 1. Make AVSS and EVSS the same potential as VSS.

2. Make EVDD the same potential as VDD.

3. Connect the REGC pin to VSS via a capacitor (0.47 to 1 μF).

4. ANI0/P20 to ANI7/P27 are set in the analog input mode after release of reset.

Remark For pin identification, see **1.6 Pin Identification**.

1.6 Pin Identification

ANI0 to ANI7:	Analog input	P120 to P124:	Port 12
AV_{REF}:	Analog reference voltage	P130:	Port 13
AV_{SS}:	Analog ground	P140 to P145:	Port 14
BUSY0:	Serial busy input	PCL:	Programmable clock output
BUZ:	Buzzer output	REGC	Regulator capacitance
EV_{DD}:	Power supply for port	$\overline{RESET}$:	Reset
EV_{SS}:	Ground for port	RxD0, RxD6:	Receive data
EXCLK:	External clock input	$\overline{SCK10}$, $\overline{SCK11}$, $\overline{SCKA0}$:	Serial clock input/output
	(main system clock)	SCL0:	Serial clock input/output
EXCLKS:	External clock input	SDA0:	Serial data input/output
	(subsystem clock)	SI10, SI11, SIA0:	Serial data input
EXLVI:	External potential input	SO10, SO11, SOA0:	Serial data output
	for low-voltage detector	$\overline{SSI11}$:	Serial interface chip select input
EXSCL0:	External serial clock input	STB0:	Serial strobe
FLMD0:	Flash programming mode	TI000, TI010,	
INTP0 to INTP7:	External interrupt input	TI001, TI011,	
KR0 to KR7:	Key return	TI50, TI51:	Timer input
NC:	Non-connection	TO00, TO01,	
OCD0A, OCD0B,		TO50, TO51,	
OCD1A, OCD1B:	On chip debug input/output	TOH0, TOH1:	Timer output
P00 to P06:	Port 0	TxD0, TxD6:	Transmit data
P10 to P17:	Port 1	V_{DD}:	Power supply
P20 to P27:	Port 2	V_{SS}:	Ground
P30 to P33:	Port 3	X1, X2:	Crystal oscillator (main system clock)
P40 to P47:	Port 4	XT1, XT2:	Crystal oscillator (subsystem clock)
P50 to P57:	Port 5		
P60 to P67:	Port 6		
P70 to P77:	Port 7		

1.7 Block Diagram

1.7.1 78K0/KB2

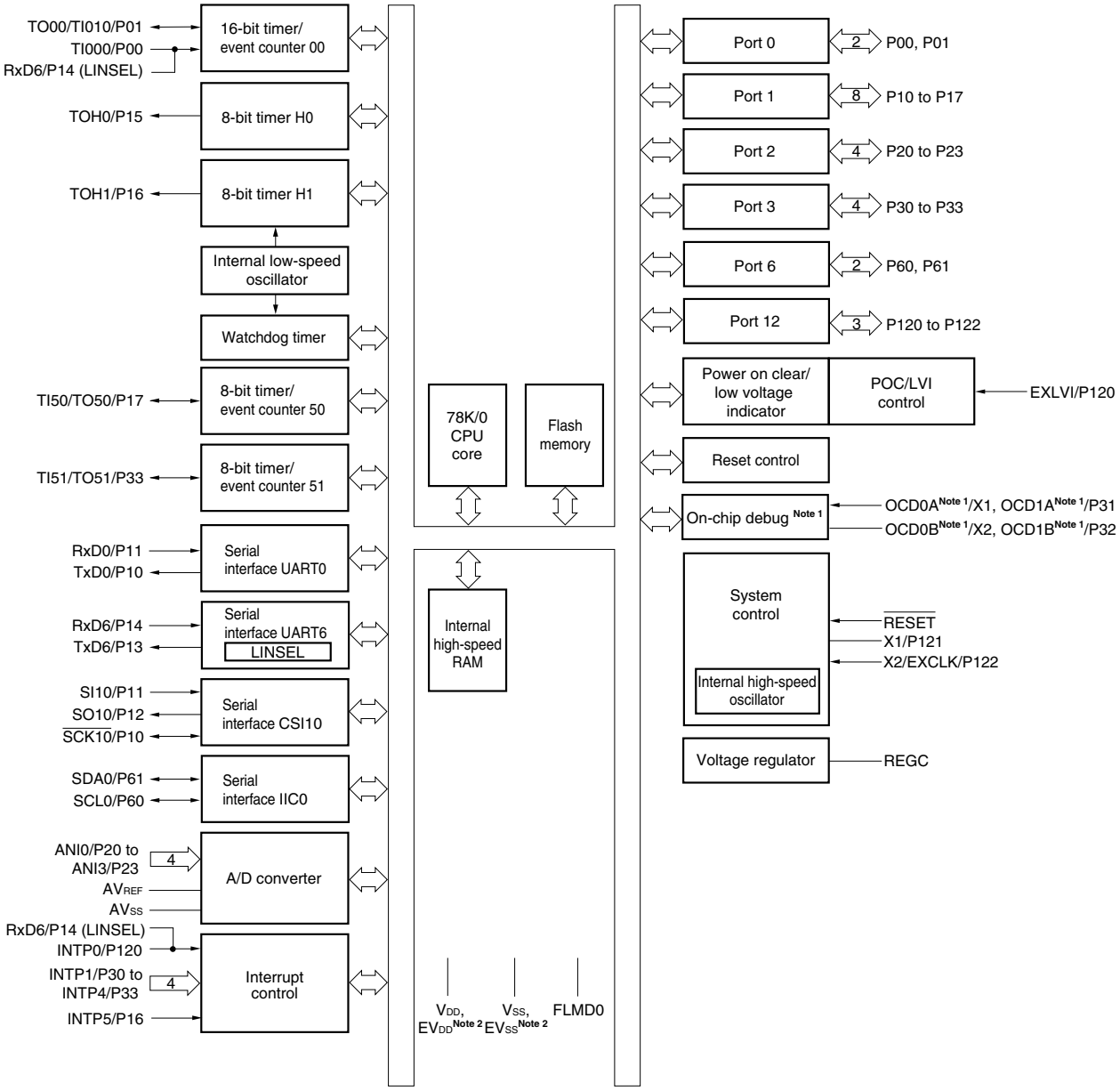

Notes 1. Available only in the products with on-chip debug function.

2. Available only in the 36-pin products.

1.7.2 78K0/KC2

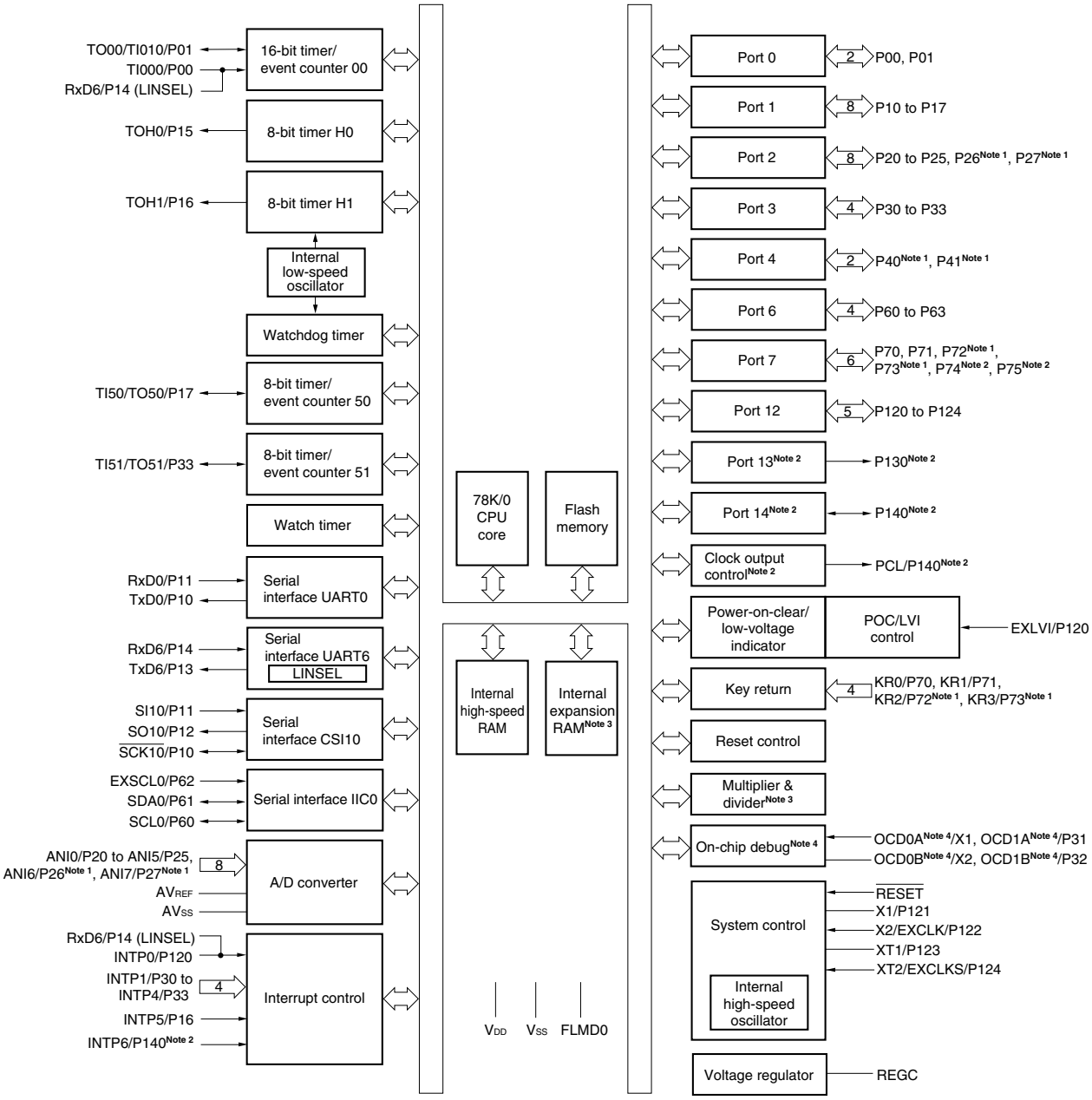

Notes 1. Available only in the 44-pin and 48-pin products.

2 Available only in the 48-pin products.

3. Available only in the products whose flash memory is at least 48 KB.

4. Available only in the products with on-chip debug function.

1.7.3 78K0/KD2

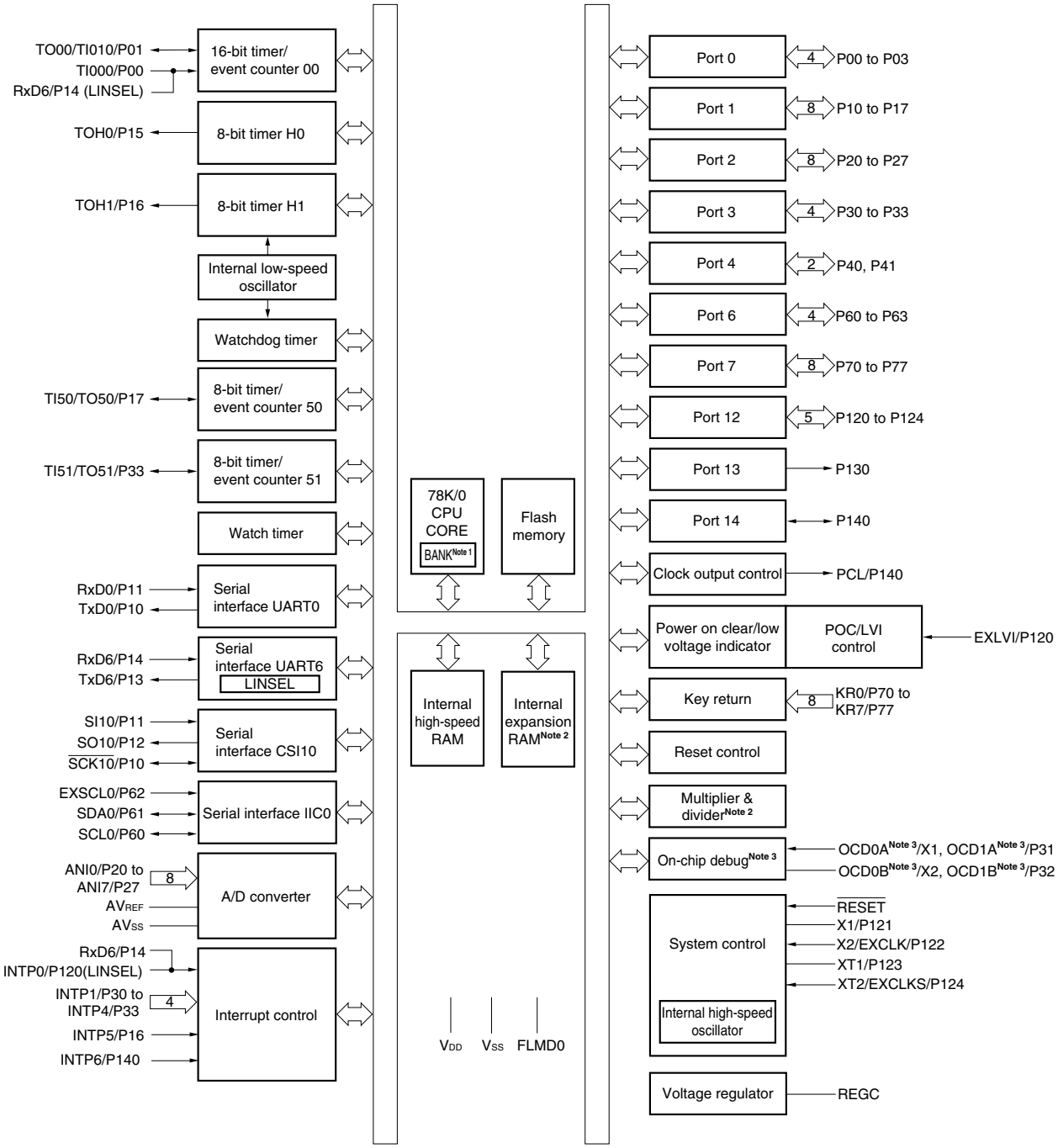

Notes 1. Available only in the products whose flash memory is at least 96 KB.

2. Available only in the products whose flash memory is at least 48 KB.

3. Available only in the products with on-chip debug function.

1.7.4 78K0/KE2

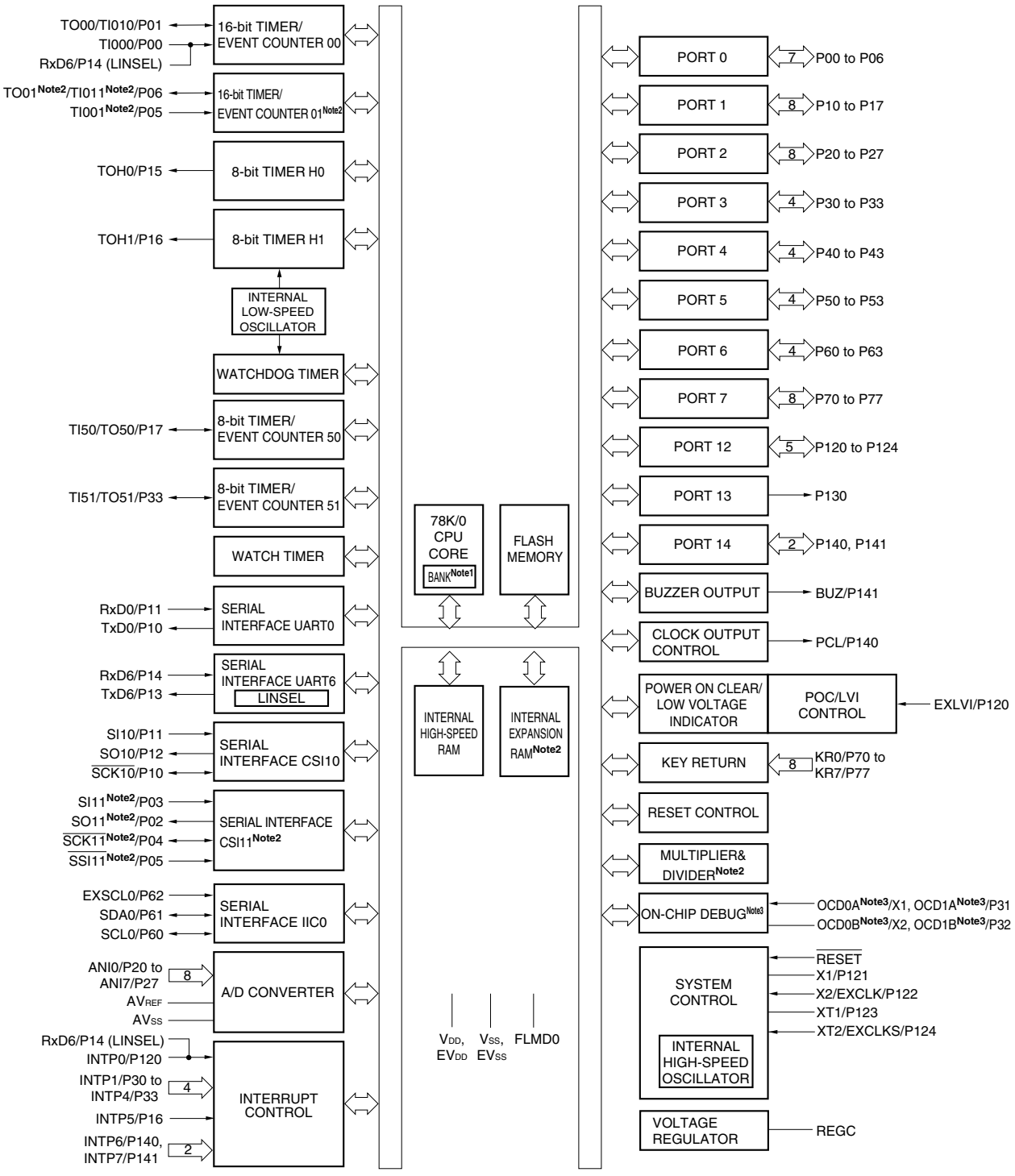

Notes 1. Available only in the products whose flash memory is at least 96 KB.

2. Available only in the products whose flash memory is at least 48 KB.

3. Available only in the products with on-chip debug function.

1.7.5 78K0/KF2

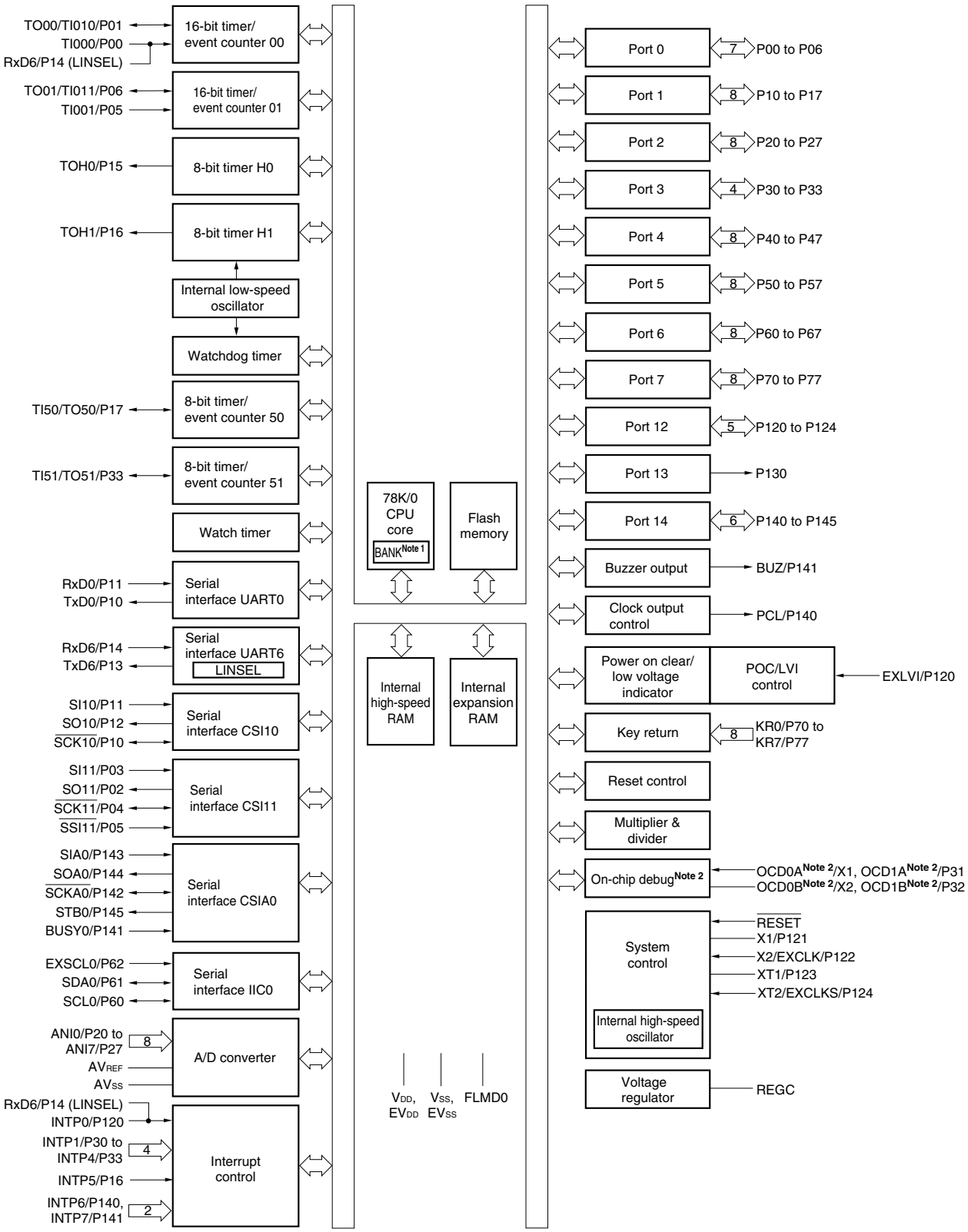

Notes 1. Available only in the products whose flash memory is at least 96 KB.

2. Available only in the products with on-chip debug function.

1.8 Outline of Functions

(1/2)

Item \ 78K0/Kx2			78K0/KB2				78K0/KC2											
			30/36 Pins				38/44 Pins				48 Pins							
Flash memory (KB)			8	16	24	32	16	24	32		16	24	32	48	60			
High-Speed RAM (KB)			0.5	0.75	1	1	0.75	1	1		0.75	1	1	1	1			
Expansion RAM (KB)			–	–	–	–	–	–	–		–	–	–	1	2			
Bank (flash memory)			–															
Power supply voltage			Standard products, (A) grade products: V_{DD} = 1.8 to 5.5 V, (A2) grade products: V_{DD} = 2.7 to 5.5 V															
Regulator			Provided															
Minimum instruction execution time			0.1 μs (20 MHz: V_{DD} = 2.7 to 5.5 V)/0.4 μs (5 MHz: V_{DD} = 1.8 to 5.5 V) Note 1															
Clock	Main	High-speed system	20 MHz: V_{DD} = 2.7 to 5.5 V/5 MHz: V_{DD} = 1.8 to 5.5 V Note 1															
		Internal high-speed oscillation	8 MHz (TYP.): V_{DD} = 1.8 to 5.5 V Note 1															
	Subsystem		–				32.768 kHz (TYP.): V_{DD} = 1.8 to 5.5 V Note 1											
	Internal low-speed oscillation		240 kHz (TYP.): V_{DD} = 1.8 to 5.5 V Note 1															
Port	Total		23				31 (38 pins)/ 37 (44 pins)				41							
	N-ch O.D. (6 V tolerance)		2				4				4							
Timer	16 bits (TM0)		1 ch															
	8 bits (TM5)		2 ch															
	8 bits (TMH)		2 ch															
	Watch		–				1 ch											
	WDT		1 ch															
Serial interface	3-wire CSI		–															
	Automatic transmit/ receive 3-wire CSI		–															
	UART/3-wire CSI Note 2		1 ch															
	UART supporting LIN-bus		1 ch															
	I^2C bus		1 ch															
10-bit A/D			4 ch				6 ch (38 pins)/ 8 ch (44 pins)				8 ch							
Interrupt	External		6				7				8							
	Internal		14				16											
Key interrupt			–				2 ch (38 pins)/ 4 ch (44 pins)				4 ch							
Reset	RESET pin		Provided															
	POC		1.59 V ±0.15 V															
	LVI		The detection level of the supply voltage is selectable.															
	WDT		Provided															
Clock output/buzzer output			–								Clock output only							
Multiplier/divider			–												Provided			
On-chip debug function			μPD78F0503D, 78F0503DA only				μPD78F0513D, 78F0513DA only				μPD78F0515D, 78F0515DA only							
Operating ambient temperature			Standard products, (A) grade products: T_A = –40 to +85°C, (A2) grade products: T_A = –40 to +125°C															

Notes 1. This is applicable to a standard expanded-specification product (μPD78F05xxA and 78F05xxDA). See **CHAPTER 30 ELECTRICAL SPECIFICATIONS (STANDARD PRODUCTS)** to **CHAPTER 33 ELECTRICAL SPECIFICATIONS ((A2) GRADE PRODUCTS: T_A: –40 to +125°C)** for products with other specifications and grades.

2. Select either of the functions of these alternate-function pins.

(2/2)

Item \ 78K0/Kx2			78K0/KD2							78K0/KE2							78K0/KF2			
			52 Pins							64 Pins							80 Pins			
Flash memory (KB)			16	24	32	48	60	96	128	16	24	32	48	60	96	128	48	60	96	128
High-Speed RAM (KB)			0.75	1	1	1	1	1	1	0.75	1	1	1	1	1	1	1	1	1	1
Expansion RAM (KB)			–	–	–	1	2	4	6	–	–	–	1	2	4	6	1	2	4	6
Bank (flash memory)			–					4	6	–					4	6	–		4	6
Power supply voltage			Standard products, (A) grade products: V_{DD} = 1.8 to 5.5 V, (A2) grade products: V_{DD} = 2.7 to 5.5 V																	
Regulator			Provided																	
Minimum instruction execution time			0.1 μs (20 MHz: V_{DD} = 2.7 to 5.5 V)/0.4 μs (5 MHz: V_{DD} = 1.8 to 5.5 V) Note 1																	
Clock	Main	High-speed system	20 MHz: V_{DD} = 2.7 to 5.5 V/5 MHz: V_{DD} = 1.8 to 5.5 V Note 1																	
		Internal high-speed oscillation	8 MHz (TYP.): V_{DD} = 1.8 to 5.5 V Note 1																	
	Subsystem		32.768 kHz (TYP.): V_{DD} = 1.8 to 5.5 V Note 1																	
	Internal low-speed oscillation		240 kHz (TYP.): V_{DD} = 1.8 to 5.5 V Note 1																	
Port	Total		45							55							71			
	N-ch O.D. (6 V tolerance)		4							4							4			
Timer	16 bits (TM0)		1 ch							2 ch										
	8 bits (TM5)		2 ch																	
	8 bits (TMH)		2 ch																	
	Watch		1 ch																	
	WDT		1 ch																	
Serial interface	3-wire CSI		–							1 ch										
	Automatic transmit/ receive 3-wire CSI		–														1 ch			
	UART/3-wire CSI Note		1 ch																	
	UART supporting LIN-bus		1 ch																	
	I^2C bus		1 ch																	
10-bit A/D			8 ch																	
Interrupt	External		8							9										
	Internal		16												19		20			
Key interrupt			8 ch																	
Reset	RESET pin		Provided																	
	POC		1.59 V ±0.15 V																	
	LVI		The detection level of the supply voltage is selectable.																	
	WDT		Provided																	
Clock output/buzzer output			Clock output only							Provided										
Multiplier/divider			–			Provided				–					Provided					
On-chip debug function			μPD78F0527D, 78F0527DA only							μPD78F0537D, 78F0537DA only							μPD78F0547D, 78F0547DA only			
Operating ambient temperature			Standard products, (A) grade products: T_A = –40 to +85°C, (A2) grade products: T_A = –40 to +125°C																	

Notes 1. This is applicable to a standard expanded-specification product (μPD78F05xxA and 78F05xxDA). See **CHAPTER 30 ELECTRICAL SPECIFICATIONS (STANDARD PRODUCTS)** to **CHAPTER 33 ELECTRICAL SPECIFICATIONS ((A2) GRADE PRODUCTS: T_A: –40 to +125°C)** for products with other specifications and grades.

2. Select either of the functions of these alternate-function pins.

An outline of the timer is shown below.

		16-Bit Timer/ Event Counters 00 and 01		8-Bit Timer/ Event Counters 50 and 51		8-Bit Timers H0 and H1		Watch Timer	Watchdog Timer
		TM00	TM01	TM50	TM51	TMH0	TMH1		
Function	Interval timer	1 channel	1 channel	1 channel	1 channel	1 channel	1 channel	1 channel[Note 1]	–
	External event counter	1 channel	1 channel	1 channel	1 channel	–	–	–	–
	PPG output	1 output	1 output	–	–	–	–	–	–
	PWM output	–	–	1 output	1 output	1 output	1 output	–	–
	Pulse width measurement	2 inputs	2 inputs	–	–	–	–	–	–
	Square-wave output	1 output	1 output	1 output	1 output	1 output	1 output	–	–
	Carrier generator	–	–	–	–	–	1 output[Nore 2]	–	–
	Timer output	–	–	–	–	–	–	1 channel[Nore 1]	–
	Watchdog timer	–	–	–	–	–	–	–	1 channel
Interrupt source		2	2	1	1	1	1	1	–

Notes 1. In the watch timer, the watch timer function and interval timer function can be used simultaneously.

2. TM51 and TMH1 can be used in combination as a carrier generator mode.

Remark The timer mounted depends on the product.

	78K0/KB2	78K0/KC2	78K0/KD2	78K0/KE2		78K0/KF2
				Products whose flash memory is less than 32 KB	Products whose flash memory is at least 48 KB	
16-bit timer/event counter 00	√					
16-bit timer/event counter 01	–				√	
8-bit timer/event counter 50	√					
8-bit timer/event counter 51	√					
8-bit timer H0	√					
8-bit timer H1	√					
Watch timer	–	√				
Watchdog timer	√					

√: Mounted, –: Not mounted

CHAPTER 2 PIN FUNCTIONS

2.1 Pin Function List

Pin I/O buffer power supplies depend on the product. The relationship between these power supplies and the pins is shown below.

Table 2-1. Pin I/O Buffer Power Supplies (AV_{REF}, V_{DD})

- 78K0/KB2: 30-pin plastic SSOP (7.62 mm (300))
- 78K0/KC2: 38-pin plastic SSOP (7.62 mm (300)), 44-pin plastic LQFP (10x10), 48-pin plastic LQFP (fine pitch) (7x7)
- 78K0/KD2: 52-pin plastic LQFP (10x10)

Power Supply	Corresponding Pins
AV_{REF}	P20 to P27
V_{DD}	Pins other than P20 to P27

Table 2-2. Pin I/O Buffer Power Supplies (AV_{REF}, EV_{DD}, V_{DD})

- 78K0/KB2: 36-pin plastic FLGA (4x4)
- 78K0/KE2: 64-pin plastic LQFP (fine pitch) (10x10), 64-pin plastic LQFP (14x14), 64-pin plastic LQFP (12x12), 64-pin plastic TQFP (fine pitch) (7x7), 64-pin plastic FLGA (5x5), 64-pin plastic FBGA (4x4)
- 78K0/KF2: 80-pin plastic LQFP (14x14), 80-pin plastic LQFP (fine pitch) (12x12)

Power Supply	Corresponding Pins
AV_{REF}	P20 to P27
EV_{DD}	Port pins other than P20 to P27 and P121 to P124
V_{DD}	• P121 to P124 • Pins other than port

2.1.1 78K0/KB2

(1) Port functions: 78K0/KB2

Function Name	I/O	Function	After Reset	Alternate Function
P00	I/O	Port 0. 2-bit I/O port. Input/output can be specified in 1-bit units. Use of an on-chip pull-up resistor can be specified by a software setting.	Input port	TI000
P01				TI010/TO00
P10	I/O	Port 1. 8-bit I/O port. Input/output can be specified in 1-bit units. Use of an on-chip pull-up resistor can be specified by a software setting.	Input port	$\overline{\text{SCK10}}$/TxD0
P11				SI10/RxD0
P12				SO10
P13				TxD6
P14				RxD6
P15				TOH0
P16				TOH1/INTP5
P17				TI50/TO50
P20 to P23	I/O	Port 2. 4-bit I/O port. Input/output can be specified in 1-bit units.	Analog input	ANI0 to ANI3
P30	I/O	Port 3. 4-bit I/O port. Input/output can be specified in 1-bit units. Use of an on-chip pull-up resistor can be specified by a software setting.	Input port	INTP1
P31				INTP2/OCD1A[Note]
P32				INTP3/OCD1B[Note]
P33				INTP4/TI51/TO51
P60	I/O	Port 6. 2-bit I/O port. Output is N-ch open-drain output (6 V tolerance). Input/output can be specified in 1-bit units.	Input port	SCL0
P61				SDA0
P120	I/O	Port 12. 3-bit I/O port. Input/output can be specified in 1-bit units. Only for P120, use of an on-chip pull-up resistor can be specified by a software setting.	Input port	INTP0/EXLVI
P121				X1/OCD0A[Note]
P122				X2/EXCLK/ OCD0B[Note]

Note μPD78F0503D and 78F0503DA (product with on-chip debug function) only

(2) Non-port functions (1/2): 78K0/KB2

Function Name	I/O	Function	After Reset	Alternate Function
ANI0 to ANI3	Input	A/D converter analog input	Analog input	P20 to P23
EXLVI	Input	Potential input for external low-voltage detection	Input port	P120/INTP0
FLMD0	–	Flash memory programming mode setting	–	–
INTP0	Input	External interrupt request input for which the valid edge (rising edge, falling edge, or both rising and falling edges) can be specified	Input port	P120/EXLVI
INTP1				P30
INTP2				P31/OCD1A[Note]
INTP3				P32/OCD1B[Note]
INTP4				P33/TI51/TO51
INTP5				P16/TOH1
REGC	–	Connecting regulator output (2.5 V) stabilization capacitance for internal operation. Connect to V_{SS} via a capacitor (0.47 to 1 μF).	–	–
$\overline{\text{RESET}}$	Input	System reset input	–	–
RxD0	Input	Serial data input to UART0	Input port	P11/SI10
RxD6	Input	Serial data input to UART6	Input port	P14
TxD0	Output	Serial data output from UART0	Input port	P10/$\overline{\text{SCK10}}$
TxD6	Output	Serial data output from UART6	Input port	P13
$\overline{\text{SCK10}}$	I/O	Clock input/output for CSI10	Input port	P10/TxD0
SI10	Input	Serial data input to CSI10		P11/RxD0
SO10	Output	Serial data output from CSI10		P12
SCL0	I/O	Clock input/output for I^2C	Input port	P60
SDA0		Serial data I/O for I^2C		P61
TI000	Input	External count clock input to 16-bit timer/event counter 00 Capture trigger input to capture registers (CR000, CR010) of 16-bit timer/event counter 00	Input port	P00
TI010	Input	Capture trigger input to capture register (CR000) of 16-bit timer/event counter 00	Input port	P01/TO00
TI50	Input	External count clock input to 8-bit timer/event counter 50	Input port	P17/TO50
TI51		External count clock input to 8-bit timer/event counter 51		P33/TO51/INTP4
TO00	Output	16-bit timer/event counter 00 output	Input port	P01/TI010
TO50	Output	8-bit timer/event counter 50 output	Input port	P17/TI50
TO51		8-bit timer/event counter 51 output		P33/TI51/INTP4
TOH0	Output	8-bit timer H0 output	Input port	P15
TOH1		8-bit timer H1 output		P16/INTP5
X1	–	Connecting resonator for main system clock	Input port	P121/OCD0A[Note]
X2	–		Input port	P122/EXCLK/OCD0B[Note]
EXCLK	Input	External clock input for main system clock	Input port	P122/X2/OCD0B[Note]

Note μPD78F0503D and 78F0503DA (product with on-chip debug function) only

(2) Non-port functions (2/2): 78K0/KB2

Function Name	I/O	Function	After Reset	Alternate Function
V_{DD}	–	For 30-pin products: Positive power supply for pins other than P20 to P23 For 36-pin products: Positive power supply for P121, P122, and non-port pins	–	–
EV_{DD} Note 1	–	For 36-pin products: Positive power supply for port pins other than P20 to P23, P121, and P122. Make the same potential as V_{DD}.	–	–
AV_{REF}	–	A/D converter reference voltage input and positive power supply for P20 to P23 and A/D converter	–	–
V_{SS}	–	For 30-pin products: Ground potential for pins other than P20 to P23 For 36-pin products: Ground potential for P121, P122, and non-port pins	–	–
EV_{SS} Note 1	–	For 36-pin products: Ground potential for port pins other than P20 to P23, P121, and P122. Make the same potential as V_{SS}.	–	–
AV_{SS}	–	A/D converter ground potential. Make the same potential as V_{SS}.	–	–
OCD0A Note 2	Input	Connection for on-chip debug mode setting pins (μPD78F0503D and 78F0503DA only)	Input port	P121/X1
OCD1A Note 2				P31/INTP2
OCD0B Note 2	–			P122/X2/EXCLK
OCD1B Note 2				P32/INTP3

Notes 1. 36-pin products only

2. μPD78F0503D and 78F0503DA (product with on-chip debug function) only

2.1.2 78K0/KC2

(1) Port functions (1/2): 78K0/KC2

Function Name	I/O	Function	After Reset	Alternate Function
P00	I/O	Port 0. 2-bit I/O port. Input/output can be specified in 1-bit units. Use of an on-chip pull-up resistor can be specified by a software setting.	Input port	TI000
P01				TI010/TO00
P10	I/O	Port 1. 8-bit I/O port. Input/output can be specified in 1-bit units. Use of an on-chip pull-up resistor can be specified by a software setting.	Input port	$\overline{SCK10}$/TxD0
P11				SI10/RxD0
P12				SO10
P13				TxD6
P14				RxD6
P15				TOH0
P16				TOH1/INTP5
P17				TI50/TO50
P20 to P25	I/O	Port 2. 8-bit I/O port. Input/output can be specified in 1-bit units.	Analog input	ANI0 to ANI5
P26[Note 1], P27[Note 1]				ANI6[Note 1], ANI7[Note 1]
P30	I/O	Port 3. 4-bit I/O port. Input/output can be specified in 1-bit units. Use of an on-chip pull-up resistor can be specified by a software setting.	Input port	INTP1
P31				INTP2/OCD1A[Note 2]
P32				INTP3/OCD1B[Note 2]
P33				TI51/TO51/INTP4
P40[Note 1], P41[Note 1]	I/O	Port 4. 2-bit I/O port. Input/output can be specified in 1-bit units. Use of an on-chip pull-up resistor can be specified by a software setting.	Input port	–
P60	I/O	Port 6. 4-bit I/O port. Output of P60 to P63 is N-ch open-drain output (6 V tolerance). Input/output can be specified in 1-bit units.	Input port	SCL0
P61				SDA0
P62				EXSCL0
P63				–
P70, P71	I/O	Port 7. 6-bit I/O port. Input/output can be specified in 1-bit units. Use of an on-chip pull-up resistor can be specified by a software setting.	Input port	KR0, KR1
P72[Note 1], P73[Note 1]				KR2[Note 1], KR3[Note 1]
P74[Note 3], P75[Note 3]				–

Notes 1. 44-pin and 48-pin products only
For the 38-pin products, be sure to set bits 6 and 7 of PM2 to “1”, and bits 0 and 1 of PM4, bits 2 and 3 of PM7, bits 6 and 7 of P2, bits 0 and 1 of P4, and bits 2 and 3 of P7 to “0”.

2. μPD78F0513D, 78F0513DA, 78F0515D and 78F0515DA (product with on-chip debug function) only

3. 48-pin products only

(1) Port functions (2/2): 78K0/KC2

Function Name	I/O	Function	After Reset	Alternate Function
P120	I/O	Port 12. 5-bit I/O port. Input/output can be specified in 1-bit units. Only for P120, use of an on-chip pull-up resistor can be specified by a software setting.	Input port	INTP0/EXLVI
P121				X1/OCD0A[Note 1]
P122				X2/EXCLK/OCD0B[Note 1]
P123				XT1
P124				XT2/EXCLKS
P130[Note 2]	Output	Port 13. 1-bit output-only port.	Output port	–
P140[Note 2]	I/O	Port 14. 1-bit I/O port. Input/output can be specified in 1-bit units. Use of an on-chip pull-up resistor can be specified by a software setting.	Input port	PCL/INTP6[Note 2]

Notes 1. μPD78F0513D, 78F0513DA, 78F0515D and 78F0515DA (product with on-chip debug function) only

2. 48-pin products only

(2) Non-port functions (1/2): 78K0/KC2

Function Name	I/O	Function	After Reset	Alternate Function
ANI0 to ANI5	Input	A/D converter analog input	Analog input	P20 to P25
ANI6[Note 1], ANI7[Note 1]				P26[Note 1], P27[Note 1]
EXLVI	Input	Potential input for external low-voltage detection	Input port	P120/INTP0
EXSCL0	Input	External clock input for serial interface. To input an external clock, input a clock of 6.4 MHz.	Input port	P62
FLMD0	–	Flash memory programming mode setting	–	–
INTP0	Input	External interrupt request input for which the valid edge (rising edge, falling edge, or both rising and falling edges) can be specified	Input port	P120/EXLVI
INTP1				P30
INTP2				P31/OCD1A[Note 2]
INTP3				P32/OCD1B[Note 2]
INTP4				P33/TI51/TO51
INTP5				P16/TOH1
INTP6[Note 3]				P140/PCL[Note 3]
KR0, KR1	Input	Key interrupt input	Input port	P70, P71
KR2[Note 1], KR3[Note 1]				P72[Note 1], P73[Note 1]
PCL[Note 3]	Output	Clock output (for trimming of high-speed system clock, subsystem clock)	Input port	P140/INTP6[Note 3]

Notes 1. 44-pin and 48-pin products only
For the 38-pin products, be sure to set bits 6 and 7 of PM2 to “1”, and bits 2 and 3 of PM7, bits 6 and 7 of P2, and bits 2 and 3 of P7 to “0”.

2. μPD78F0513D, 78F0513DA, 78F0515D and 78F0515DA (product with on-chip debug function) only

3. 48-pin products only

(2) Non-port functions (2/2): 78K0/KC2

Function Name	I/O	Function	After Reset	Alternate Function
REGC	–	Connecting regulator output (2.5 V) stabilization capacitance for internal operation. Connect to V_{SS} via a capacitor (0.47 to 1 μF).	–	–
$\overline{\text{RESET}}$	Input	System reset input	–	–
RxD0	Input	Serial data input to UART0	Input port	P11/SI10
RxD6	Input	Serial data input to UART6	Input port	P14
$\overline{\text{SCK10}}$	I/O	Clock input/output for CSI10	Input port	P10/TxD0
SCL0	I/O	Clock input/output for I^2C	Input port	P60
SDA0	I/O	Serial data I/O for I^2C	Input port	P61
SI10	Input	Serial data input to CSI10	Input port	P11/RxD0
SO10	Output	Serial data output from CSI10	Input port	P12
TI000	Input	External count clock input to 16-bit timer/event counter 00 Capture trigger input to capture registers (CR000, CR010) of 16-bit timer/event counter 00	Input port	P00
TI010		Capture trigger input to capture register (CR000) of 16-bit timer/event counter 00		P01/TO00
TI50	Input	External count clock input to 8-bit timer/event counter 50	Input port	P17/TO50
TI51		External count clock input to 8-bit timer/event counter 51		P33/TO51/INTP4
TO00	Output	16-bit timer/event counter 00 output	Input port	P01/TI010
TO50	Output	8-bit timer/event counter 50 output	Input port	P17/TI50
TO51		8-bit timer/event counter 51 output		P33/TI51/INTP4
TOH0	Output	8-bit timer H0 output	Input port	P15
TOH1		8-bit timer H1 output		P16/INTP5
TxD0	Output	Serial data output from UART0	Input port	P10/$\overline{\text{SCK10}}$
TxD6	Output	Serial data output from UART6	Input port	P13
X1	–	Connecting resonator for main system clock	Input port	P121/OCD0A[Note]
X2	–			P122/EXCLK/ OCD0B[Note]
EXCLK	Input	External clock input for main system clock	Input port	P122/X2/ OCD0B[Note]
XT1	–	Connecting resonator for subsystem clock	Input port	P123
XT2	–		Input port	P124/EXCLKS
EXCLKS	Input	External clock input for subsystem clock	Input port	P124/XT2
V_{DD}	–	Positive power supply for pins other than P20 to P27	–	–
AV_{REF}	–	A/D converter reference voltage input and positive power supply for P20 to P27 and A/D converter	–	–
V_{SS}	–	Ground potential for pins other than P20 to P27	–	–
AV_{SS}	–	A/D converter ground potential. Make the same potential as V_{SS}.	–	–
OCD0A[Note]	Input	Connection for on-chip debug mode setting pins (μPD78F0513D, 78F0513DA, 78F0515D and 78F0515DA only)	Input port	P121/X1
OCD1A[Note]				P31/INTP2
OCD0B[Note]	–			P122/X2/EXCLK
OCD1B[Note]				P32/INTP3

Note μPD78F0513D, 78F0513DA, 78F0515D and 78F0515DA (product with on-chip debug function) only

2.1.3 78K0/KD2

(1) Port functions (1/2): 78K0/KD2

Function Name	I/O	Function	After Reset	Alternate Function
P00	I/O	Port 0. 4-bit I/O port. Input/output can be specified in 1-bit units. Use of an on-chip pull-up resistor can be specified by a software setting.	Input port	TI000
P01				TI010/TO00
P02				–
P03				–
P10	I/O	Port 1. 8-bit I/O port. Input/output can be specified in 1-bit units. Use of an on-chip pull-up resistor can be specified by a software setting.	Input port	$\overline{\text{SCK10}}$/TxD0
P11				SI10/RxD0
P12				SO10
P13				TxD6
P14				RxD6
P15				TOH0
P16				TOH1/INTP5
P17				TI50/TO50
P20 to P27	I/O	Port 2. 8-bit I/O port. Input/output can be specified in 1-bit units.	Analog input	ANI0 to ANI7
P30	I/O	Port 3. 4-bit I/O port. Input/output can be specified in 1-bit units. Use of an on-chip pull-up resistor can be specified by a software setting.	Input port	INTP1
P31				INTP2/OCD1A[Note]
P32				INTP3/OCD1B[Note]
P33				TI51/TO51/INTP4
P40, P41	I/O	Port 4. 2-bit I/O port. Input/output can be specified in 1-bit units. Use of an on-chip pull-up resistor can be specified by a software setting.	Input port	–
P60	I/O	Port 6. 4-bit I/O port. Output is N-ch open-drain output (6 V tolerance). Input/output can be specified in 1-bit units.	Input port	SCL0
P61				SDA0
P62				EXSCL0
P63				–
P70 to P77	I/O	Port 7. 8-bit I/O port. Input/output can be specified in 1-bit units. Use of an on-chip pull-up resistor can be specified by a software setting.	Input port	KR0 to KR7
P120	I/O	Port 12. 5-bit I/O port. Input/output can be specified in 1-bit units. Only for P120, use of an on-chip pull-up resistor can be specified by a software setting.	Input port	INTP0/EXLVI
P121				X1/OCD0A[Note]
P122				X2/EXCLK/ OCD0B[Note]
P123				XT1
P124				XT2/EXCLKS

Note μPD78F0527D and 78F0527DA (product with on-chip debug function) only

(1) Port functions (2/2): 78K0/KD2

Function Name	I/O	Function	After Reset	Alternate Function
P130	Output	Port 13. 1-bit output-only port.	Output port	–
P140	I/O	Port 14. 1-bit I/O port. Input/output can be specified in 1-bit units. Use of an on-chip pull-up resistor can be specified by a software setting.	Input port	PCL/INTP6

(2) Non-port functions (1/2): 78K0/KD2

Function Name	I/O	Function	After Reset	Alternate Function
ANI0 to ANI7	Input	A/D converter analog input	Analog input	P20 to P27
EXLVI	Input	Potential input for external low-voltage detection	Input port	P120/INTP0
EXSCL0	Input	External clock input for I^2C To input an external clock, input a clock of 6.4 MHz.	Input port	P62
FLMD0	–	Flash memory programming mode setting	–	–
INTP0	Input	External interrupt request input for which the valid edge (rising edge, falling edge, or both rising and falling edges) can be specified	Input port	P120/EXLVI
INTP1				P30
INTP2				P31/OCD1A[Note]
INTP3				P32/OCD1B[Note]
INTP4				P33/TI51/TO51
INTP5				P16/TOH1
INTP6				P140/PCL
KR0 to KR7	Input	Key interrupt input	Input port	P70 to P77
PCL	Output	Clock output (for trimming of high-speed system clock, subsystem clock)	Input port	P140/INTP6
REGC	–	Connecting regulator output (2.5 V) stabilization capacitance for internal operation. Connect to V_{SS} via a capacitor (0.47 to 1 μF).	–	–
$\overline{\text{RESET}}$	Input	System reset input	–	–
RxD0	Input	Serial data input to UART0	Input port	P11/SI10
RxD6		Serial data input to UART6		P14
$\overline{\text{SCK10}}$	I/O	Clock input/output for CSI10	Input port	P10/TxD0
SCL0		Clock input/output for I^2C		P60
SDA0	I/O	Serial data I/O for I^2C	Input port	P61
SI10	Input	Serial data input to CSI10	Input port	P11/RxD0
SO10	Output	Serial data output from CSI10	Input port	P12
TxD0	Output	Serial data output from UART0	Input port	P10/$\overline{\text{SCK10}}$
TxD6		Serial data output from UART6		P13

Note μPD78F0527D and 78F0527DA (product with on-chip debug function) only

(2) Non-port functions (2/2): 78K0/KD2

	Function Name	I/O	Function	After Reset	Alternate Function
	TI000	Input	External count clock input to 16-bit timer/event counter 00 Capture trigger input to capture registers (CR000, CR010) of 16-bit timer/event counter 00	Input port	P00
	TI010		Capture trigger input to capture register (CR000) of 16-bit timer/event counter 00		P01/TO00
	TI50	Input	External count clock input to 8-bit timer/event counter 50	Input port	P17/TO50
	TI51		External count clock input to 8-bit timer/event counter 51		P33/TO51/INTP4
	TO00	Output	16-bit timer/event counter 00 output	Input port	P01/TI010
	TO50	Output	8-bit timer/event counter 50 output	Input port	P17/TI50
	TO51		8-bit timer/event counter 51 output		P33/TI51/INTP4
	TOH0		8-bit timer H0 output		P15
	TOH1		8-bit timer H1 output		P16/INTP5
<R>	X1	–	Connecting resonator for main system clock	Input port	P121/OCD0A[Note]
	X2	–			P122/EXCLK/OCD0B[Note]
	EXCLK	Input	External clock input for main system clock	Input port	P122/X2/OCD0B[Note]
<R>	XT1	–	Connecting resonator for subsystem clock	Input port	P123
	XT2	–		Input port	P124/EXCLKS
	EXCLKS	Input	External clock input for subsystem clock	Input port	P124/XT2
	V_{DD}	–	Positive power supply for pins other than P20 to P27	–	–
<R>	AV_{REF}	–	A/D converter reference voltage input and positive power supply for P20 to P27 and A/D converter	–	–
	V_{SS}	–	Ground potential for pins other than P20 to P27	–	–
	AV_{SS}	–	A/D converter ground potential. Make the same potential as V_{SS}.	–	–
	OCD0A[Note]	Input	Connection for on-chip debug mode setting pins (μPD78F0527D and 78F0527DA only)	Input port	P121/X1
	OCD1A[Note]				P31/INTP2
	OCD0B[Note]	–			P122/X2/EXCLK
	OCD1B[Note]				P32/INTP3

Note μPD78F0527D and 78F0527DA (product with on-chip debug function) only

2.1.4 78K0/KE2

(1) Port functions (1/2): 78K0/KE2

Function Name	I/O	Function	After Reset	Alternate Function
P00	I/O	Port 0. 7-bit I/O port. Input/output can be specified in 1-bit units. Use of an on-chip pull-up resistor can be specified by a software setting.	Input port	TI000
P01				TI010/TO00
P02				SO11 Note 1
P03				SI11 Note 1
P04				$\overline{\text{SCK11}}$ Note 1
P05				TI001 Note 1 / $\overline{\text{SSI11}}$ Note 1
P06				TI011 Note 1 / TO01 Note 1
P10	I/O	Port 1. 8-bit I/O port. Input/output can be specified in 1-bit units. Use of an on-chip pull-up resistor can be specified by a software setting.	Input port	$\overline{\text{SCK10}}$/TxD0
P11				SI10/RxD0
P12				SO10
P13				TxD6
P14				RxD6
P15				TOH0
P16				TOH1/INTP5
P17				TI50/TO50
P20 to P27	I/O	Port 2. 8-bit I/O port. Input/output can be specified in 1-bit units.	Analog input	ANI0 to ANI7
P30	I/O	Port 3. 4-bit I/O port. Input/output can be specified in 1-bit units. Use of an on-chip pull-up resistor can be specified by a software setting.	Input port	INTP1
P31				INTP2/OCD1A Note 2
P32				INTP3/OCD1B Note 2
P33				TI51/TO51/INTP4
P40 to P43	I/O	Port 4. 4-bit I/O port. Input/output can be specified in 1-bit units. Use of an on-chip pull-up resistor can be specified by a software setting.	Input port	–
P50 to P53	I/O	Port 5. 4-bit I/O port. Input/output can be specified in 1-bit units. Use of an on-chip pull-up resistor can be specified by a software setting.	Input port	–
P60	I/O	Port 6. 4-bit I/O port. Output of P60 to P63 is N-ch open-drain output (6 V tolerance). Input/output can be specified in 1-bit units.	Input port	SCL0
P61				SDA0
P62				EXSCL0
P63				–

Notes 1. Available only in the products whose flash memory is at least 48 KB.

2. μPD78F0537D and 78F0537DA (product with on-chip debug function) only

(1) Port functions (2/2): 78K0/KE2

Function Name	I/O	Function	After Reset	Alternate Function
P70 to P77	I/O	Port 7. 8-bit I/O port. Input/output can be specified in 1-bit units. Use of an on-chip pull-up resistor can be specified by a software setting.	Input port	KR0 to KR7
P120	I/O	Port 12. 5-bit I/O port. Input/output can be specified in 1-bit units. Only for P120, use of an on-chip pull-up resistor can be specified by a software setting.	Input port	INTP0/EXLVI
P121				X1/OCD0A Note
P122				X2/EXCLK/OCD0B Note
P123				XT1
P124				XT2/EXCLKS
P130	Output	Port 13. 1-bit output-only port.	Output port	–
P140	I/O	Port 14. 2-bit I/O port. Input/output can be specified in 1-bit units. Use of an on-chip pull-up resistor can be specified by a software setting.	Input port	PCL/INTP6
P141				BUZ/INTP7

Note μPD78F0537D and 78F0537DA (product with on-chip debug function) only

(2) Non-port functions (1/3): 78K0/KE2

Function Name	I/O	Function	After Reset	Alternate Function
ANI0 to ANI7	Input	A/D converter analog input	Analog input	P20 to P27
BUZ	Output	Buzzer output	Input port	P141/INTP7
EXLVI	Input	Potential input for external low-voltage detection	Input port	P120/INTP0
EXSCL0	Input	External clock input for I^2C. To input an external clock, input a clock of 6.4 MHz.	Input port	P62
FLMD0	–	Flash memory programming mode setting	–	–
INTP0	Input	External interrupt request input for which the valid edge (rising edge, falling edge, or both rising and falling edges) can be specified	Input port	P120/EXLVI
INTP1				P30
INTP2				P31/OCD1A Note
INTP3				P32/OCD1B Note
INTP4				P33/TI51/TO51
INTP5				P16/TOH1
INTP6				P140/PCL
INTP7				P141/BUZ
KR0 to KR7	Input	Key interrupt input	Input port	P70 to P77
PCL	Output	Clock output (for trimming of high-speed system clock, subsystem clock)	Input port	P140/INTP6
REGC	–	Connecting regulator output (2.5 V) stabilization capacitance for internal operation. Connect to V_{SS} via a capacitor (0.47 to 1 μF).	–	–

Note μPD78F0537D and 78F0537DA (product with on-chip debug function) only

(2) Non-port functions (2/3): 78K0/KE2

Function Name	I/O	Function	After Reset	Alternate Function
$\overline{\text{RESET}}$	Input	System reset input	–	–
RxD0	Input	Serial data input to UART0	Input port	P11/SI10
RxD6		Serial data input to UART6		P14
$\overline{\text{SCK10}}$	I/O	Clock input/output for CSI10	Input port	P10/TxD0
$\overline{\text{SCK11}}$ Note 1		Clock input/output for CSI11		P04
SCL0	I/O	Clock input/output for I^2C	Input port	P60
SDA0	I/O	Serial data I/O for I^2C	Input port	P61
SI10	Input	Serial data input to CSI10	Input port	P11/RxD0
SI11 Note 1		Serial data input to CSI11		P03
SO10	Output	Serial data output from CSI10	Input port	P12
SO11 Note 1		Serial data output from CSI11		P02
$\overline{\text{SSI11}}$ Note 1	Input	Chip select input to CSI11	Input port	P05/TI001
TI000	Input	External count clock input to 16-bit timer/event counter 00 Capture trigger input to capture registers (CR000, CR010) of 16-bit timer/event counter 00	Input port	P00
TI001 Note 1		External count clock input to 16-bit timer/event counter 01 Capture trigger input to capture registers (CR001, CR011) of 16-bit timer/event counter 01		P05/$\overline{\text{SSI11}}$ Note 1
TI010		Capture trigger input to capture register (CR000) of 16-bit timer/event counter 00		P01/TO00
TI011 Note 1		Capture trigger input to capture register (CR001) of 16-bit timer/event counter 01		P06/TO01 Note 1
TI50	Input	External count clock input to 8-bit timer/event counter 50	Input port	P17/TO50
TI51		External count clock input to 8-bit timer/event counter 51		P33/TO51/INTP4
TO00	Output	16-bit timer/event counter 00 output	Input port	P01/TI010
TO01 Note 1		16-bit timer/event counter 01 output		P06/TI011 Note 1
TO50	Output	8-bit timer/event counter 50 output	Input port	P17/TI50
TO51		8-bit timer/event counter 51 output		P33/TI51/INTP4
TOH0	Output	8-bit timer H0 output	Input port	P15
TOH1		8-bit timer H1 output		P16/INTP5
TxD0	Output	Serial data output from UART0	Input port	P10/$\overline{\text{SCK10}}$
TxD6		Serial data output from UART6		P13
<R> X1	–	Connecting resonator for main system clock	Input port	P121/OCD0A Note 2
X2	–			P122/EXCLK/ OCD0B Note 2
EXCLK	Input	External clock input for main system clock	Input port	P122/X2/ OCD0B Note 2
<R> XT1	–	Connecting resonator for subsystem clock	Input port	P123
XT2	–		Input port	P124/EXCLKS
EXCLKS	Input	External clock input for subsystem clock	Input port	P124/XT2

Notes 1. Available only in the products whose flash memory is at least 48 KB.

2. μPD78F0537D and 78F0537DA (product with on-chip debug function) only

(2) Non-port functions (3/3): 78K0/KE2

Function Name	I/O	Function	After Reset	Alternate Function
V_{DD}	–	Positive power supply for P121 to P124 and other than ports	–	–
EV_{DD}	–	Positive power supply for ports other than P20 to P27 and P121 to P124. Make EV_{DD} the same potential as V_{DD}.	–	–
<R> AV_{REF}	–	A/D converter reference voltage input and positive power supply for P20 to P27 and A/D converter	–	–
V_{SS}	–	Ground potential for P121 to P124 and other than ports	–	–
EV_{SS}	–	Ground potential for ports other than P20 to P27 and P121 to P124. Make EV_{SS} the same potential as V_{SS}.	–	–
AV_{SS}	–	A/D converter ground potential. Make the same potential as V_{SS}.	–	–
OCD0A[Note]	Input	Connection for on-chip debug mode setting pins (μPD78F0537D and 78F0537DA only)	Input port	P121/X1
OCD1A[Note]				P31/INTP2
OCD0B[Note]	–			P122/X2/EXCLK
OCD1B[Note]				P32/INTP3

Note μPD78F0537D and 78F0537DA (product with on-chip debug function) only

2.1.5 78K0/KF2

(1) Port functions (1/2): 78K0/KF2

Function Name	I/O	Function	After Reset	Alternate Function
P00	I/O	Port 0. 7-bit I/O port. Input/output can be specified in 1-bit units. Use of an on-chip pull-up resistor can be specified by a software setting.	Input port	TI000
P01				TI010/TO00
P02				SO11
P03				SI11
P04				$\overline{\text{SCK11}}$
P05				TI001/$\overline{\text{SSI11}}$
P06				TI011/TO01
P10	I/O	Port 1. 8-bit I/O port. Input/output can be specified in 1-bit units. Use of an on-chip pull-up resistor can be specified by a software setting.	Input port	$\overline{\text{SCK10}}$/TxD0
P11				SI10/RxD0
P12				SO10
P13				TxD6
P14				RxD6
P15				TOH0
P16				TOH1/INTP5
P17				TI50/TO50
P20 to P27	I/O	Port 2. 8-bit I/O port. Input/output can be specified in 1-bit units.	Analog input	ANI0 to ANI7
P30	I/O	Port 3. 4-bit I/O port. Input/output can be specified in 1-bit units. Use of an on-chip pull-up resistor can be specified by a software setting.	Input port	INTP1
P31				INTP2/OCD1A[Note]
P32				INTP3/OCD1B[Note]
P33				TI51/TO51/INTP4
P40 to P47	I/O	Port 4. 8-bit I/O port. Input/output can be specified in 1-bit units. Use of an on-chip pull-up resistor can be specified by a software setting.	Input port	–
P50 to P57	I/O	Port 5. 8-bit I/O port. Input/output can be specified in 1-bit units. Use of an on-chip pull-up resistor can be specified by a software setting.	Input port	–
P60	I/O	Port 6. 8-bit I/O port. Output of P60 to P63 is N-ch open-drain output (6 V tolerance). Input/output can be specified in 1-bit units. Only for P64 to P67, use of an on-chip pull-up resistor can be specified by a software setting.	Input port	SCL0
P61				SDA0
P62				EXSCL0
P63 to P67				–

Note μPD78F0547D and 78F0547DA (product with on-chip debug function) only

(1) Port functions (2/2): 78K0/KF2

Function Name	I/O	Function	After Reset	Alternate Function
P70 to P77	I/O	Port 7. 8-bit I/O port. Input/output can be specified in 1-bit units. Use of an on-chip pull-up resistor can be specified by a software setting.	Input port	KR0 to KR7
P120	I/O	Port 12. 5-bit I/O port. Input/output can be specified in 1-bit units. Only for P120, use of an on-chip pull-up resistor can be specified by a software setting.	Input port	INTP0/EXLVI
P121				X1/OCD0A Note
P122				X2/EXCLK/OCD0B Note
P123				XT1
P124				XT2/EXCLKS
P130	Output	Port 13. 1-bit output-only port.	Output port	–
P140	I/O	Port 14. 6-bit I/O port. Input/output can be specified in 1-bit units. Use of an on-chip pull-up resistor can be specified by a software setting.	Input port	PCL/INTP6
P141				BUZ/BUSY0/INTP7
P142				$\overline{\text{SCKA0}}$
P143				SIA0
P144				SOA0
P145				STB0

Note μPD78F0547D and 78F0547DA (product with on-chip debug function) only

(2) Non-port functions (1/3): 78K0/KF2

Function Name	I/O	Function	After Reset	Alternate Function
ANI0 to ANI7	Input	A/D converter analog input	Analog input	P20 to P27
BUSY0	Input	CSIA0 busy input	Input port	P141/BUZ/INTP7
BUZ	Output	Buzzer output	Input port	P141/BUSY0/INTP7
EXLVI	Input	Potential input for external low-voltage detection	Input port	P120/INTP0
EXSCL0	Input	External clock input for I^2C. To input an external clock, input a clock of 6.4 MHz.	Input port	P62
FLMD0	–	Flash memory programming mode setting	–	–
INTP0	Input	External interrupt request input for which the valid edge (rising edge, falling edge, or both rising and falling edges) can be specified	Input port	P120/EXLVI
INTP1				P30
INTP2				P31/OCD1A Note
INTP3				P32/OCD1B Note
INTP4				P33/TI51/TO51
INTP5				P16/TOH1
INTP6				P140/PCL
INTP7				P141/BUZ/BUSY0
KR0 to KR7	Input	Key interrupt input	Input port	P70 to P77

Note μPD78F0547D and 78F0547DA (product with on-chip debug function) only

(2) Non-port functions (2/3): 78K0/KF2

Function Name	I/O	Function	After Reset	Alternate Function
PCL	Output	Clock output (for trimming of high-speed system clock, subsystem clock)	Input port	P140/INTP6
REGC	–	Connecting regulator output (2.5 V) stabilization capacitance for internal operation. Connect to V_{SS} via a capacitor (0.47 to 1 μF).	–	–
$\overline{\text{RESET}}$	Input	System reset input	–	–
RxD0	Input	Serial data input to UART0	Input port	P11/SI10
RxD6	Input	Serial data input to UART6	Input port	P14
$\overline{\text{SCK10}}$	I/O	Clock input/output for CSI10, CSI11	Input port	P10/TxD0
$\overline{\text{SCK11}}$				P04
$\overline{\text{SCKA0}}$	I/O	Clock input/output for CSIA0	Input port	P142
SCL0	I/O	Clock input/output for I^2C	Input port	P60
SDA0	I/O	Serial data I/O for I^2C	Input port	P61
SI10	Input	Serial data input to CSI10, CSI11	Input port	P11/RxD0
SI11				P03
SIA0	Input	Serial data input to CSIA0	Input port	P143
SO10	Output	Serial data output from CSI10, CSI11	Input port	P12
SO11				P02
SOA0	Output	Serial data output from CSIA0	Input port	P144
$\overline{\text{SSI11}}$	Input	Chip select input to CSI11	Input port	P05/TI001
STB0	Output	Strobe output from CSIA0	Input port	P145
TI000	Input	External count clock input to 16-bit timer/event counter 00 Capture trigger input to capture registers (CR000, CR010) of 16-bit timer/event counter 00	Input port	P00
TI001		External count clock input to 16-bit timer/event counter 01 Capture trigger input to capture registers (CR001, CR011) of 16-bit timer/event counter 01		P05/$\overline{\text{SSI11}}$
TI010	Input	Capture trigger input to capture register (CR000) of 16-bit timer/event counter 00	Input port	P01/TO00
TI011		Capture trigger input to capture register (CR001) of 16-bit timer/event counter 01		P06/TO01
TI50	Input	External count clock input to 8-bit timer/event counter 50	Input port	P17/TO50
TI51		External count clock input to 8-bit timer/event counter 51		P33/TO51/INTP4
TO00	Output	16-bit timer/event counter 00 output	Input port	P01/TI010
TO01		16-bit timer/event counter 01 output		P06/TI011
TO50	Output	8-bit timer/event counter 50 output	Input port	P17/TI50
TO51		8-bit timer/event counter 51 output		P33/TI51/INTP4
TOH0	Output	8-bit timer H0 output	Input port	P15
TOH1		8-bit timer H1 output		P16/INTP5
TxD0	Output	Serial data output from UART0	Input port	P10/$\overline{\text{SCK10}}$
TxD6	Output	Serial data output from UART6	Input port	P13

(2) Non-port functions (3/3): 78K0/KF2

Function Name	I/O	Function	After Reset	Alternate Function
X1	–	Connecting resonator for main system clock	Input port	P121/OCD0A[Note]
X2	–		Input port	P122/EXCLK/OCD0B[Note]
EXCLK	Input	External clock input for main system clock	Input port	P122/X2/OCD0B[Note]
XT1	–	Connecting resonator for subsystem clock	Input port	P123
XT2	–		Input port	P124/EXCLKS
EXCLKS	Input	External clock input for subsystem clock	Input port	P124/XT2
V_{DD}	–	Positive power supply for P121 to P124 and other than ports	–	–
EV_{DD}	–	Positive power supply for ports other than P20 to P27 and P121 to P124. Make EV_{DD} the same potential as V_{DD}.	–	–
AV_{REF}	–	A/D converter reference voltage input and positive power supply for P20 to P27 and A/D converter	–	–
V_{SS}	–	Ground potential for P121 to P124 and other than ports	–	–
EV_{SS}	–	Ground potential for ports other than P20 to P27 and P121 to P124. Make EV_{SS} the same potential as V_{SS}.	–	–
AV_{SS}	–	A/D converter ground potential. Make the same potential as V_{SS}.	–	–
OCD0A[Note]	Input	Connection for on-chip debug mode setting pins (μPD78F0547D and 78F0547DA only)	Input port	P121/X1
OCD1A[Note]				P31/INTP2
OCD0B[Note]	–			P122/X2/EXCLK
OCD1B[Note]				P32/INTP3

Note μPD78F0547D and 78F0547DA (product with on-chip debug function) only

2.2 Description of Pin Functions

Remark The pins mounted depend on the product. See **1.4 Ordering Information** and **2.1 Pin Function List**.

2.2.1 P00 to P06 (port 0)

P00 to P06 function as an I/O port. These pins also function as timer I/O, serial interface data I/O, clock I/O, and chip select input.

	78K0/KB2	78K0/KC2	78K0/KD2	78K0/KE2		78K0/KF2
				Products whose flash memory is less than 32 KB	Products whose flash memory is at least 48 KB	
P00/TI000	√		√	√	√	
P01/TI010/TO00	√		√	√	√	
P02/SO11	–		P02Note	P02Note	√	
P03/SI11	–		P03Note	P03Note	√	
P04/$\overline{\text{SCK11}}$	–		–	P04Note	√	
P05/TI001/$\overline{\text{SSI11}}$	–		–	P05Note	√	
P06/TI011/TO01	–		–	P06Note	√	

Note The 78K0/KE2 products whose flash memory is less than 32 KB and 78K0/KD2 products are only provided with port functions and not alternate functions.

Remark √: Mounted, –: Not mounted

The following operation modes can be specified in 1-bit units.

(1) Port mode

P00 to P06 function as an I/O port. P00 to P06 can be set to input or output port in 1-bit units using port mode register 0 (PM0). Use of an on-chip pull-up resistor can be specified by pull-up resistor option register 0 (PU0).

(2) Control mode

P00 to P06 function as timer I/O, serial interface data I/O, clock I/O, and chip select input.

(a) TI000, TI001

These are the pins for inputting an external count clock to 16-bit timer/event counters 00 and 01 and are also for inputting a capture trigger signal to the capture registers (CR000, CR010 or CR001, CR011) of 16-bit timer/event counters 00 and 01.

(b) TI010, TI011

These are the pins for inputting a capture trigger signal to the capture register (CR000 or CR001) of 16-bit timer/event counters 00 and 01.

(c) TO00, TO01

These are timer output pins of 16-bit timer/event counters 00 and 01.

(d) SI11

This is a serial data input pin of serial interface CSI11.

(e) SO11

This is a serial data output pin of serial interface CSI11.

(f) $\overline{\text{SCK11}}$

This is a serial clock I/O pin of serial interface CSI11.

(g) $\overline{\text{SSI11}}$

This is a chip select input pin of serial interface CSI11.

2.2.2 P10 to P17 (port 1)

P10 to P17 function as an I/O port. These pins also function as pins for external interrupt request input, serial interface data I/O, clock I/O, and timer I/O.

	78K0/KB2	78K0/KC2	78K0/KD2	78K0/KE2		78K0/KF2
				Products whose flash memory is less than 32 KB	Products whose flash memory is at least 48 KB	
P10/$\overline{\text{SCK10}}$/TxD0	√					
P11/SI10/RxD0	√					
P12/SO10	√					
P13/TxD6	√					
P14/RxD6	√					
P15/TOH0	√					
P16/TOH1/INTP5	√					
P17/TI50/TO50	√					

Remark √: Mounted

The following operation modes can be specified in 1-bit units.

(1) Port mode

P10 to P17 function as an I/O port. P10 to P17 can be set to input or output port in 1-bit units using port mode register 1 (PM1). Use of an on-chip pull-up resistor can be specified by pull-up resistor option register 1 (PU1).

(2) Control mode

P10 to P17 function as external interrupt request input, serial interface data I/O, clock I/O, and timer I/O.

(a) SI10

This is a serial data input pin of serial interface CSI10.

(b) SO10

This is a serial data output pin of serial interface CSI10.

(c) $\overline{\text{SCK10}}$

This is a serial clock I/O pin of serial interface CSI10.

(d) RxD0

This is a serial data input pin of serial interface UART0.

(e) RxD6

This is a serial data input pin of serial interface UART6.

(f) TxD0

This is a serial data output pin of serial interface UART0.

(g) TxD6

This is a serial data output pin of serial interface UART6.

(h) TI50

This is the pin for inputting an external count clock to 8-bit timer/event counter 50.

(i) TO50

This is a timer output pin of 8-it timer/event counter 50.

(j) TOH0, TOH1

These are the timer output pins of 8-bit timers H0 and H1.

(k) INTP5

This is an external interrupt request input pin for which the valid edge (rising edge, falling edge, or both rising and falling edges) can be specified.

2.2.3 P20 to P27 (port 2)

P20 to P27 function as an I/O port. These pins also function as pins for A/D converter analog input.

	78K0/KB2	78K0/KC2	78K0/KD2	78K0/KE2		78K0/KF2
				Products whose flash memory is less than 32 KB	Products whose flash memory is at least 48 KB	
P20/ANI0	√	√	√			
P21/ANI1	√	√	√			
P22/ANI2	√	√	√			
P23/ANI3	√	√	√			
P24/ANI4	–	√	√			
P25/ANI5	–	√	√			
P26/ANI6	–	√Note	√			
P27/ANI7	–	√Note	√			

Note This is not mounted onto 38-pin products of the 78K0/KC2. For the 38-pin products, be sure to set bits 6 and 7 of PM2 to “1”, and bits 6 and 7 of P2 to “0”.

Remark √: Mounted, –: Not mounted

The following operation modes can be specified in 1-bit units.

(1) Port mode

P20 to P27 function as an I/O port. P20 to P27 can be set to input or output port in 1-bit units using port mode register 2 (PM2).

(2) Control mode

P20 to P27 function as A/D converter analog input pins (ANI0 to ANI7). When using these pins as analog input pins, see **(5) ANI0/P20 to ANI7/P27** in **13.6 Cautions for A/D Converter**.

Caution ANI0/P20 to ANI7/P27 are set in the analog input mode after release of reset.

2.2.4 P30 to P33 (port 3)

P30 to P33 function as an I/O port. These pins also function as pins for external interrupt request input and timer I/O.

	78K0/KB2	78K0/KC2	78K0/KD2	78K0/KE2		78K0/KF2
				Products whose flash memory is less than 32 KB	Products whose flash memory is at least 48 KB	
P30/INTP1	√					
P31/INTP2/ OCD1A[Note]	√					
P32/INTP3/ OCD1B[Note]	√					
P33/INTP4/TI51/ TO51	√					

Note OCD1A and OCD1B are provided to the products with an on-chip debug function (μPD78F05xxD and 78F05xxDA) only.

Remark √: Mounted

The following operation modes can be specified in 1-bit units.

(1) Port mode

P30 to P33 function as an I/O port. P30 to P33 can be set to input or output port in 1-bit units using port mode register 3 (PM3). Use of an on-chip pull-up resistor can be specified by pull-up resistor option register 3 (PU3).

(2) Control mode

P30 to P33 function as external interrupt request input and timer I/O.

(a) INTP1 to INTP4

These are the external interrupt request input pins for which the valid edge (rising edge, falling edge, or both rising and falling edges) can be specified.

(b) TI51

This is an external count clock input pin to 8-bit timer/event counter 51.

(c) TO51

This is a timer output pin from 8-bit timer/event counter 51.

Caution 1. In the product with an on-chip debug function (μPD78F05xxD and 78F05xxDA), be sure to pull the P31/INTP2/OCD1A pin down before a reset release, to prevent malfunction.

Caution 2. Process the P31/INTP2/OCD1A pin of the products mounted with the on-chip debug function (μPD78F05xxD and 78F05xxDA) as follows, when it is not used when it is connected to a flash memory programmer or an on-chip debug emulator.

		P31/INTP2/OCD1A
Flash memory programmer connection		Connect to EV_{SS}[Note] via a resistor.
On-chip debug emulator connection (when it is not used as an on-chip debug mode setting pin)	During reset	
	During reset released	Input: Connect to EV_{DD}[Note] or EV_{SS}[Note] via a resistor. Output: Leave open.

Note With products without an EV_{SS} pin, connect them to V_{SS}. With products without an EV_{DD} pin, connect them to V_{DD}.

Remark P31 and P32 of the product with an on-chip debug function (μPD78F05xxD and 78F05xxDA) can be used as on-chip debug mode setting pins (OCD1A and OCD1B) when the on-chip debug function is used. For how to connect an on-chip debug emulator (QB-MINI2), see **CHAPTER 28 ON-CHIP DEBUG FUNCTION (μPD78F05xxD and 78F05xxDA ONLY).**

2.2.5 P40 to P47 (port 4)

P40 to P47 function as an I/O port. P40 to P47 can be set to input or output port in 1-bit units using port mode register 4 (PM4). Use of an on-chip pull-up resistor can be specified by pull-up resistor option register 4 (PU4).

	78K0/KB2	78K0/KC2	78K0/KD2	78K0/KE2		78K0/KF2
				Products whose flash memory is less than 32 KB	Products whose flash memory is at least 48 KB	
P40	–	√[Note]	√	√		√
P41	–	√[Note]	√	√		√
P42	–	–		√		√
P43	–	–		√		√
P44	–	–		–		√
P45	–	–		–		√
P46	–	–		–		√
P47	–	–		–		√

Note This is not mounted onto 38-pin products of the 78K0/KC2. For the 38-pin products, be sure to set bits 0 and 1 of PM4 and P4 to “0”.

Remark √: Mounted, –: Not mounted

2.2.6 P50 to P57 (port 5)

P50 to P57 function as an I/O port. P50 to P57 can be set to input or output port in 1-bit units using port mode register 5 (PM5). Use of an on-chip pull-up resistor can be specified by pull-up resistor option register 5 (PU5).

	78K0/KB2	78K0/KC2	78K0/KD2	78K0/KE2		78K0/KF2
				Products whose flash memory is less than 32 KB	Products whose flash memory is at least 48 KB	
P50	–			√		√
P51	–			√		√
P52	–			√		√
P53	–			√		√
P54	–			–		√
P55	–			–		√
P56	–			–		√
P57	–			–		√

Remark √: Mounted, –: Not mounted

2.2.7 P60 to P67 (port 6)

P60 to P67 function as an I/O port. These pins also function as pins for serial interface data I/O, clock I/O, and external clock input.

	78K0/KB2	78K0/KC2	78K0/KD2	78K0/KE2		78K0/KF2
				Products whose flash memory is less than 32 KB	Products whose flash memory is at least 48 KB	
P60/SCL0	√	√				√
P61/SDA0	√	√				√
P62/EXSCL0	–	√				√
P63	–	√				√
P64	–	–				√
P65	–	–				√
P66	–	–				√
P67	–	–				√

Remark √: Mounted, –: Not mounted

The following operation modes can be specified in 1-bit units.

(1) Port mode

P60 to P67 function as an I/O port. P60 to P67 can be set to input port or output port in 1-bit units using port mode register 6 (PM6). Only for P64 to P67, use of an on-chip pull-up resistor can be specified by pull-up resistor option register 6 (PU6).

Output of P60 to P63 is N-ch open-drain output (6 V tolerance).

(2) Control mode

P60 to P67 function as serial interface data I/O, clock I/O, and external clock input.

(a) SDA0

This is a serial data I/O pin for serial interface IIC0.

(b) SCL0

This is a serial clock I/O pin for serial interface IIC0.

(c) EXSCL0

This is an external clock input pin to serial interface IIC0. To input an external clock, input a clock of 6.4 MHz.

2.2.8 P70 to P77 (port 7)

P70 to P77 function as an I/O port. These pins also function as key interrupt input pins.

	78K0/KB2	78K0/KC2	78K0/KD2	78K0/KE2		78K0/KF2
				Products whose flash memory is less than 32 KB	Products whose flash memory is at least 48 KB	
P70/KR0	–	√	√			
P71/KR1	–	√	√			
P72/KR2	–	√Note 1	√			
P73/KR3	–	√Note 1	√			
P74/KR4	–	P74Note 2	√			
P75/KR5	–	P75Note 2	√			
P76/KR6	–	–	√			
P77/KR7	–	–	√			

Notes 1. This is not mounted onto 38-pin products of the 78K0/KC2. For the 38-pin products, be sure to set bits 2 and 3 of PM7 and P7 to “0”.

2. This is not mounted onto 38-pin and 44-pin products of the 78K0/KC2. The 48-pin products are only provided with port functions and not alternate functions.

Remark √: Mounted, –: Not mounted

The following operation modes can be specified in 1-bit units.

(1) Port mode

P70 to P77 function as an I/O port. P70 to P77 can be set to input or output port in 1-bit units using port mode register 7 (PM7). Use of an on-chip pull-up resistor can be specified by pull-up resistor option register 7 (PU7).

(2) Control mode

P70 to P77 function as key interrupt input pins.

(a) KR0 to KR7

These are the key interrupt input pins.

2.2.9 P120 to P124 (port 12)

P120 to P124 function as an I/O port. These pins also function as pins for external interrupt request input, potential input for external low-voltage detection, connecting resonator for main system clock, connecting resonator for subsystem clock, external clock input for main system clock, and external clock input for subsystem clock.

	78K0/KB2	78K0/KC2	78K0/KD2	78K0/KE2		78K0/KF2
				Products whose flash memory is less than 32 KB	Products whose flash memory is at least 48 KB	
P120/INTP0/EXLVI	√	√				
P121/X1/OCD0A[Note]	√	√				
P122/X2/EXCLK/ OCD0B[Note]	√	√				
P123/XT1	–	√				
P124/XT2/EXCLKS	–	√				

Note OCD0A and OCD0B are provided to the products with an on-chip debug function (μPD78F05xxD and 78F05xxDA) only.

Remark √: Mounted, –: Not mounted

The following operation modes can be specified in 1-bit units.

(1) Port mode

P120 to P124 function as an I/O port. P120 to P124 can be set to input or output port using port mode register 12 (PM12). Only for P120, use of an on-chip pull-up resistor can be specified by pull-up resistor option register 12 (PU12).

(2) Control mode

P120 to P124 function as pins for external interrupt request input, potential input for external low-voltage detection, connecting resonator for main system clock, connecting resonator for subsystem clock, external clock input for main system clock, and external clock input for subsystem clock.

(a) INTP0

This functions as an external interrupt request input (INTP0) for which the valid edge (rising edge, falling edge, or both rising and falling edges) can be specified.

(b) EXLVI

This is a potential input pin for external low-voltage detection.

(c) X1, X2

These are the pins for connecting a resonator for main system clock.

(d) EXCLK

This is an external clock input pin for main system clock.

(e) XT1, XT2

These are the pins for connecting a resonator for subsystem clock.

(f) EXCLKS

This is an external clock input pin for subsystem clock.

Caution Process the P121/X1/OCD0A pin of the products mounted with the on-chip debug function (μPD78F05xxD and 78F05xxDA) as follows, when it is not used when it is connected to a flash memory programmer or an on-chip debug emulator.

		P121/X1/OCD0A
Flash memory programmer connection		Connect to V_{SS} via a resistor.
On-chip debug emulator connection (when it is not used as an on-chip debug mode setting pin)	During reset	
	During reset released	Input: Connect to V_{DD} or V_{SS} via a resistor. Output: Leave open.

Remark X1 and X2 of the product with an on-chip debug function (μPD78F05xxD and 78F05xxDA) can be used as on-chip debug mode setting pins (OCD0A and OCD0B) when the on-chip debug function is used. For how to connect an on-chip debug emulator (QB-MINI2), see **CHAPTER 28 ON-CHIP DEBUG FUNCTION (μPD78F05xxD and 78F05xxDA ONLY).**

2.2.10 P130 (port 13)

P130 functions as an output-only port.

	78K0/KB2	78K0/KC2	78K0/KD2	78K0/KE2		78K0/KF2
				Products whose flash memory is less than 32 KB	Products whose flash memory is at least 48 KB	
P130	–	√Note	√			

Note This is not mounted onto 38-pin and 44-pin products of the 78K0/KC2.

Remarks 1. When the device is reset, P130 outputs a low level. Therefore, to output a high level from P130 before the device is reset, the output signal of P130 can be used as a pseudo reset signal of the CPU (see the figure for **Remark** in **5.2.10 Port 13**).

2. √: Mounted, –: Not mounted

2.2.11 P140 to P145 (port 14)

P140 to P145 function as an I/O port. These pins also function as external interrupt request input, clock output, buzzer output, serial interface data I/O, clock I/O, busy input, and strobe output pins.

	78K0/KB2	78K0/KC2	78K0/KD2	78K0/KE2		78K0/KF2
				Products whose flash memory is less than 32 KB	Products whose flash memory is at least 48 KB	
P140/PCL/INTP6	–	√Note 1	√	√		√
P141/BUZ/BUSY0/INTP7	–	–	–	P141/BUZ/INTP7Note 2		√
P142/$\overline{\text{SCKA0}}$	–	–	–	–		√
P143/SIA0	–	–	–	–		√
P144/SOA0	–	–	–	–		√
P145/STB0	–	–	–	–		√

Notes 1. This is not mounted onto 38-pin and 44-pin products of the 78K0/KC2.

2. The 78K0/KE2 products are not provided with the BUSY0 input function.

Remark √: Mounted, –: Not mounted

The following operation modes can be specified in 1-bit units.

(1) Port mode

P140 to P145 function as an I/O port. P140 to P145 can be set to input or output port in 1-bit units using port mode register 14 (PM14). Use of an on-chip pull-up resistor can be specified by pull-up resistor option register 14 (PU14).

(2) Control mode

P140 to P145 function as external interrupt request input, clock output, buzzer output, serial interface data I/O, clock I/O, busy input, and strobe output pins.

(a) INTP6, INTP7

These are the external interrupt request input pins for which the valid edge (rising edge, falling edge, or both rising and falling edges) can be specified.

(b) PCL

This is a clock output pin.

(c) BUZ

This is a buzzer output pin.

(d) BUSY0

This is a serial interface CSIA0 busy input pin.

(e) SIA0

This is a serial interface CSIA0 serial data input pin.

(f) SOA0

This is a serial interface CSIA0 serial data output pin.

(g) $\overline{\text{SCKA0}}$

This is a serial interface CSIA0 serial clock I/O pin.

(h) STB0

This is a serial interface CSIA0 strobe output pin.

2.2.12 AV_{REF}, AV_{SS}, V_{DD}, EV_{DD}, V_{SS}, EV_{SS}

	78K0/KB2	78K0/KC2	78K0/KD2	78K0/KE2		78K0/KF2
				Products whose flash memory is less than 32 KB	Products whose flash memory is at least 48 KB	
AV_{REF}	√	√		√		
AV_{SS}	√	√		√		
V_{DD}	√	√		√		
EV_{DD}	√Note	–		√		
V_{SS}	√	√		√		
EV_{SS}	√Note	–		√		

Note This is not mounted onto 30-pin products of the 78K0/KB2.

Remark √: Mounted, –: Not mounted

(a) AV_{REF}

This is the A/D converter reference voltage input pin and the positive power supply pin of P20 to P27 and A/D converter.

When the A/D converter is not used, connect this pin directly to EV_{DD} or V_{DD}Note.

Note Make the AV_{REF} pin the same potential as the V_{DD} pin when port 2 is used as a digital port.

(b) AV_{SS}

This is the A/D converter ground potential pin. Even when the A/D converter is not used, always use this pin with the same potential as the V_{SS} pin.

(c) V_{DD} and EV_{DD}

V_{DD} is the positive power supply pin for P121 to P124 and other than ports[Note].

EV_{DD} is the positive power supply pin for ports other than P20 to P27 and P121 to P124.

Always make EV_{DD} the same potential as V_{DD}.

Note With products that are not mounted with an EV_{DD} pin, use V_{DD} as a positive power supply pin other than P20 to P27.

(d) V_{SS} and EV_{SS}

V_{SS} is the ground potential pin for P121 to P124 and other than ports.

EV_{SS} is the ground potential pin for ports other than P20 to P27 and P121 to P124.

Always make EV_{SS} the same potential as V_{SS}.

Note With products that are not mounted with an EV_{SS} pin, use V_{SS} as a ground potential pin other than P20 to P27.

2.2.13 $\overline{\text{RESET}}$

This is the active-low system reset input pin.

2.2.14 REGC

This is the pin for connecting regulator output (2.5 V) stabilization capacitance for internal operation. Connect this pin to V_{SS} via a capacitor (0.47 to 1 μF).

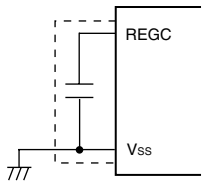

Caution Keep the wiring length as short as possible for the broken-line part in the above figure.

2.2.15 FLMD0

This is a pin for setting flash memory programming mode.

Connect FLMD0 to EV_{SS} or V_{SS} in the normal operation mode.

In flash memory programming mode, connect this pin to the flash memory programmer.

2.3 Pin I/O Circuits and Recommended Connection of Unused Pins

Table 2-3 shows the types of pin I/O circuits and the recommended connections of unused pins.
See **Figure 2-1** for the configuration of the I/O circuit of each type.

Remark The pins mounted depend on the product. See **1.5 Ordering Information (Top View)** and **2.1 Pin Function List**.

Table 2-3. Pin I/O Circuit Types (1/3)

Pin Name	I/O Circuit Type	I/O	Recommended Connection of Unused Pins
P00/TI000	5-AQ	I/O	Input: Independently connect to EV_{DD} or EV_{SS} via a resistor. Output: Leave open.
P01/TI010/TO00			
P02/SO11	5-AG		
P03/SI11	**Note 1**		
P04/$\overline{SCK11}$			
P05/TI001/$\overline{SSI11}$			
P06/TI011/TO01			
P10/$\overline{SCK10}$/TxD0	5-AQ		
P11/SI10/RxD0			
P12/SO10	5-AG		
P13/TxD6			
P14/RxD6	5-AQ		
P15/TOH0	5-AG		
P16/TOH1/INTP5	5-AQ		
P17/TI50/TO50			
ANI0/P20 to ANI7/P27[Note 2]	11-G		< Digital input setting and analog input setting> Independently connect to AV_{REF} or AV_{SS} via a resistor. <Digital output setting> Leave open.

Notes 1. "5-AG" type: 78K0/KE2 whose flash memory is less than 32 KB and 78K0/KD2
"5-AQ" type: 78K0/KE2 whose flash memory is at least 48 KB and 78K0/KF2
(Products other than the above are not mounted with P03 to P06.)

2. ANI0/P20 to ANI7/P27 are set in the analog input mode after release of reset.

Remark With products not provided with an EV_{DD} or EV_{SS} pin, replace EV_{DD} with V_{DD}, or replace EV_{SS} with V_{SS}.

Table 2-3. Pin I/O Circuit Types (2/3)

Pin Name	I/O Circuit Type	I/O	Recommended Connection of Unused Pins
P30/INTP1	5-AQ	I/O	Input: Independently connect to EV_{DD} or EV_{SS} via a resistor. Output: Leave open.
P31/INTP2/OCD1A[Note 1]			
P32/INTP3/OCD1B			
P33/TI51/TO51/INTP4			
P40 to P47	5-AG		
P50 to P57			
P60/SCL0	13-AI		Input: Independently connect to EV_{DD} or EV_{SS} via a resistor, or connect directly to EV_{SS}. Output: Leave this pin open at low-level output after clearing the output latch of the port to 0.
P61/SDA0			
P62/EXSCL0			
P63	13-P		
P64 to P67	5-AG		Input: Independently connect to EV_{DD} or EV_{SS} via a resistor. Output: Leave open.
P70/KR0 to P77/KR7	5-AQ		
P120/INTP0/EXLVI			
P121/X1/OCD0A[Notes 1, 2]	37		Input: Independently connect to V_{DD} or V_{SS} via a resistor. Output: Leave open.
P122/X2/EXCLK/ OCD0B[Notes 2]			
P123/XT1[Note 2]			
P124/XT2/EXCLKS[Note 2]			
P130	3-C	Output	Leave open.

Notes 1. Process the P31/INTP2/OCD1A and P121/X1/OCD0A pins of the products mounted with the on-chip debug function (μPD78F05xxD and 78F05xxDA) as follows, when it is not used when it is connected to a flash memory programmer or an on-chip debug emulator.

		P31/INTP2/OCD1A	P121/X1/OCD0A
Flash memory programmer connection		Connect to EV_{SS} via a resistor.	Connect to V_{SS} via a resistor.
On-chip debug emulator connection (when it is not used as an on-chip debug mode setting pin)	During reset		
	During reset released	Input: Connect to EV_{DD} or EV_{SS} via a resistor. Output: Leave open.	Input: Connect to V_{DD} or V_{SS} via a resistor. Output: Leave open.

2. Use recommended connection above in I/O port mode (see **Figure 6-3** and **Figure 6-4 Format of Clock Operation Mode Select Register (OSCCTL)**) when these pins are not used.

Remark With products not provided with an EV_{DD} or EV_{SS} pin, replace EV_{DD} with V_{DD}, or replace EV_{SS} with V_{SS}.

Table 2-3. Pin I/O Circuit Types (3/3)

	Pin Name	I/O Circuit Type	I/O	Recommended Connection of Unused Pins
	P140/PCL/INTP6	5-AQ	I/O	Input: Independently connect to EV_{DD} or EV_{SS} via a resistor. Output: Leave open.
	P141/BUZ/BUSY0/INTP7			
	P142/$\overline{SCKA0}$			
	P143/SIA0			
	P144/SOA0	5-AG		
	P145/STB0			
<R>	AV_{REF}	–	–	<When one or more of P20 to P27 are set as a digital port> Make this pin the same potential as EV_{DD} and V_{DD}. <When all of P20 to P27 are set as analog ports> Make this pin to have a potential where 1.8 V ≤ AV_{REF} ≤ V_{DD}.
<R>	AV_{SS}	–	–	Make this pin the same potential as the EV_{SS} and V_{SS}.
	FLMD0	38-A	–	Connect to EV_{SS} or V_{SS}[Note].
<R>	$\overline{RESET}$	2	Input	Connect directly to EV_{DD} or via a resistor.
<R>	REGC	–	–	Connect to V_{SS} via capacitor (0.47 to 1 μF).

Note FLMD0 is a pin that is used to write data to the flash memory. To rewrite the data of the flash memory on-board, connect this pin to EV_{SS} or V_{SS} via a resistor (10 kΩ: recommended). The same applies when executing on-chip debugging with a product with an on-chip debug function (μPD78F05xxD and 78F05xxDA).

Remark With products not provided with an EV_{DD} or EV_{SS} pin, replace EV_{DD} with V_{DD}, or replace EV_{SS} with V_{SS}.

Figure 2-1. Pin I/O Circuit List (1/2)

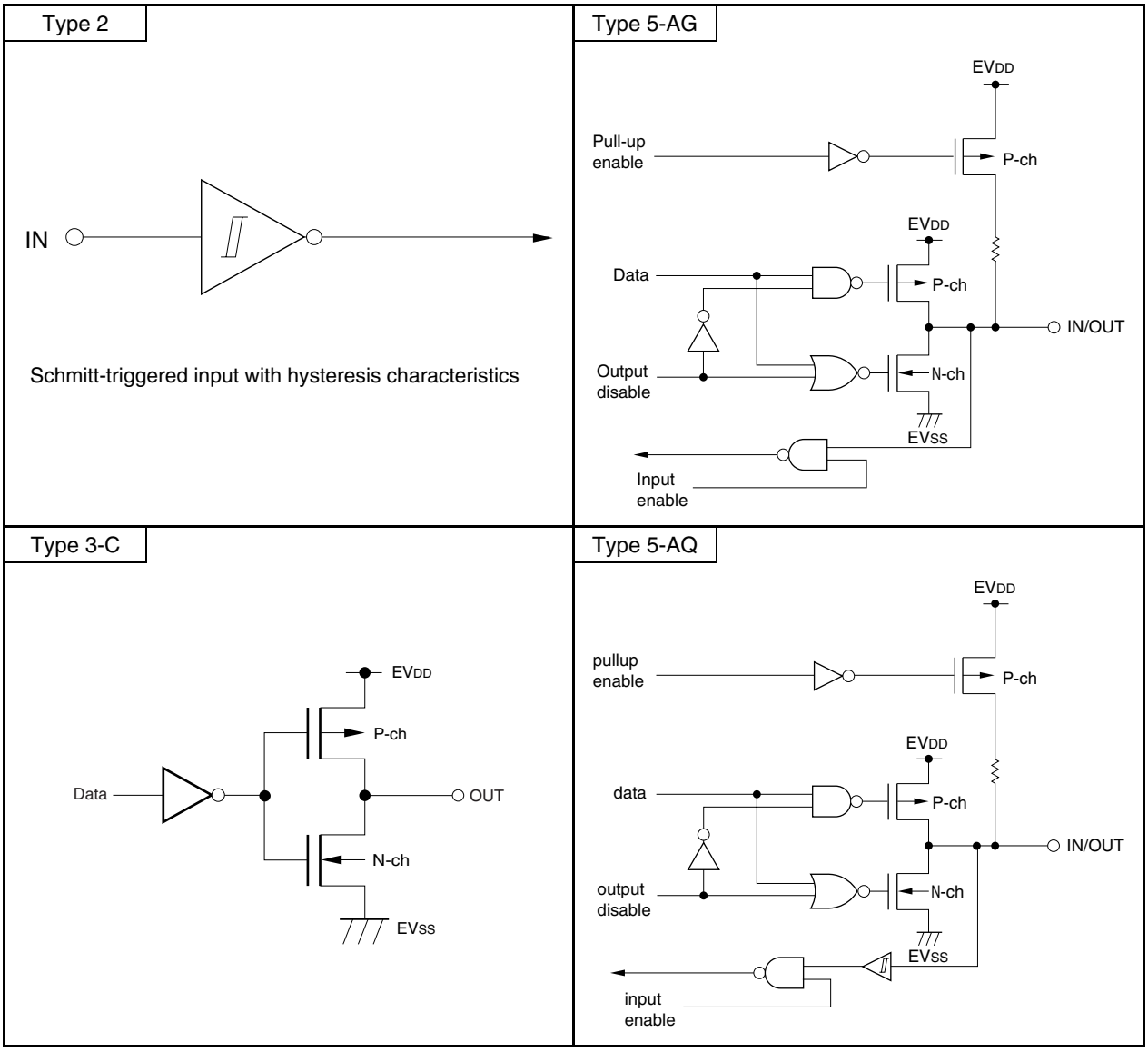

Remark With products not provided with an EV_{DD} or EV_{SS} pin, replace EV_{DD} with V_{DD}, or replace EV_{SS} with V_{SS}.

Figure 2-1. Pin I/O Circuit List (2/2)

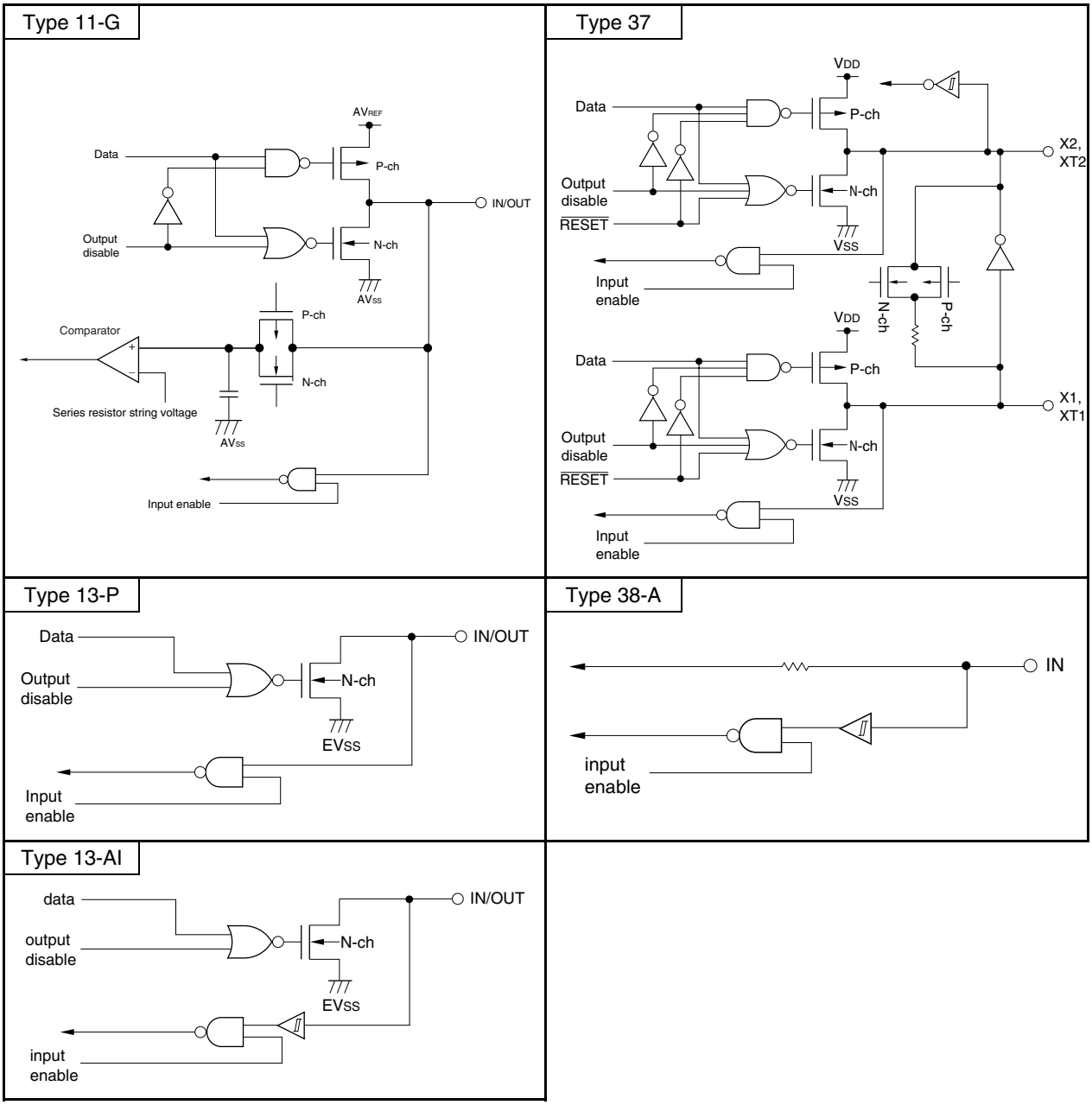

Remark With products not provided with an EV_{DD} or EV_{SS} pin, replace EV_{DD} with V_{DD}, or replace EV_{SS} with V_{SS}.

CHAPTER 3 CPU ARCHITECTURE

3.1 Memory Space

Products in the 78K0/Kx2 microcontrollers can access a 64 KB memory space. Figures 3-1 to 3-11 show the memory maps.

Cautions 1. Regardless of the internal memory capacity, the initial values of the internal memory size switching register (IMS) and internal expansion RAM size switching register (IXS) of all products in the 78K0/Kx2 microcontrollers are fixed (IMS = CFH, IXS = 0CH). Therefore, set the value corresponding to each product as indicated below.

2. To set the memory size, set IMS and then IXS. Set the memory size so that the internal ROM and internal expansion RAM areas do not overlap.

Table 3-1. Set Values of Internal Memory Size Switching Register (IMS)
(78K0/KB2, and 38-pin products and 44-pin products of the 78K0/KC2)

78K0/KB2	38-pin products and 44-pin products of the 78K0/KC2	IMS	ROM Capacity	Internal High-Speed RAM Capacity
μPD78F0500, 78F0500A	–	42H	8 KB	512 bytes
μPD78F0501, 78F0501A	μPD78F0511, 78F0511A	04H	16 KB	768 bytes
μPD78F0502, 78F0502A	μPD78F0512, 78F0512A	C6H	24 KB	1 KB
μPD78F0503, 78F0503A, 78F0503D[Note], 78F0503DA[Note]	μPD78F0513, 78F0513A, 78F0513D[Note], 78F0513DA[Note]	C8H	32 KB	1 KB

Note The ROM and RAM capacities of the products with the on-chip debug function can be debugged by setting IMS, according to the debug target products. Set IMS according to the debug target products.

Table 3-2. Set Values of Internal Memory Size Switching Register (IMS) and Internal Expansion RAM Size Switching Register (IXS) (48-pin products of the 78K0/KC2, 78K0/KD2, 78K0/KE2, and 78K0/KF2)

48-pin products of the 78K0/KC2	78K0/KD2	78K0/KE2	78K0/KF2	IMS	IXS	ROM Capacity	Internal High-Speed RAM Capacity	Internal Expansion RAM Capacity
μPD78F0511, 78F0511A	μPD78F0521, 78F0521A	μPD78F0531, 78F0531A	–	04H	0CH	16 KB	768 bytes	–
μPD78F0512, 78F0512A	μPD78F0522, 78F0522A	μPD78F0532, 78F0532A	–	C6H	0CH	24 KB	1 KB	–
μPD78F0513, 78F0513A	μPD78F0523, 78F0523A	μPD78F0533, 78F0533A	–	C8H	0CH	32 KB	1 KB	–
μPD78F0514, 78F0514A	μPD78F0524, 78F0524A	μPD78F0534, 78F0534A	μPD78F0544, 78F0544A	CCH	0AH	48 KB	1 KB	1 KB
μPD78F0515, 78F0515A, 78F0515D[Note 1], 78F0515DA[Note 1]	μPD78F0525, 78F0525A	μPD78F0535, 78F0535A	μPD78F0545, 78F0545A	CFH	08H	60 KB		2 KB
–	μPD78F0526, 78F0526A	μPD78F0536, 78F0536A	μPD78F0546, 78F0546A	CCH[Note 2]	04H	96 KB[Note 2]		4 KB
–	μPD78F0527, 78F0527A, 78F0527D[Note 1], 78F0527DA[Note 1]	μPD78F0537, 78F0537A, 78F0537D[Note 1], 78F0537DA[Note 1]	μPD78F0547, 78F0547A, 78F0547D[Note 1], 78F0547DA[Note 1]	CCH[Note 2]	00H	128 KB[Note 2]		6 KB

Notes 1. The ROM and RAM capacities of the products with the on-chip debug function can be debugged according to the debug target products. Set IMS and IXS according to the debug target products.

2. The μPD78F05x6 and 78F05x6A (x = 2 to 4) have internal ROMs of 96 KB, and the μPD78F05x7, 78F05x7A, 78F05x7D and 78F05x7DA (x = 2 to 4) have those of 128 KB. However, the set value of IMS of these devices is the same as those of the 48 KB product because memory banks are used. For how to set the memory banks, see **4.3 Memory Bank Select Register (BANK)**.

Figure 3-1. Memory Map (μPD78F0500 and 78F0500A)

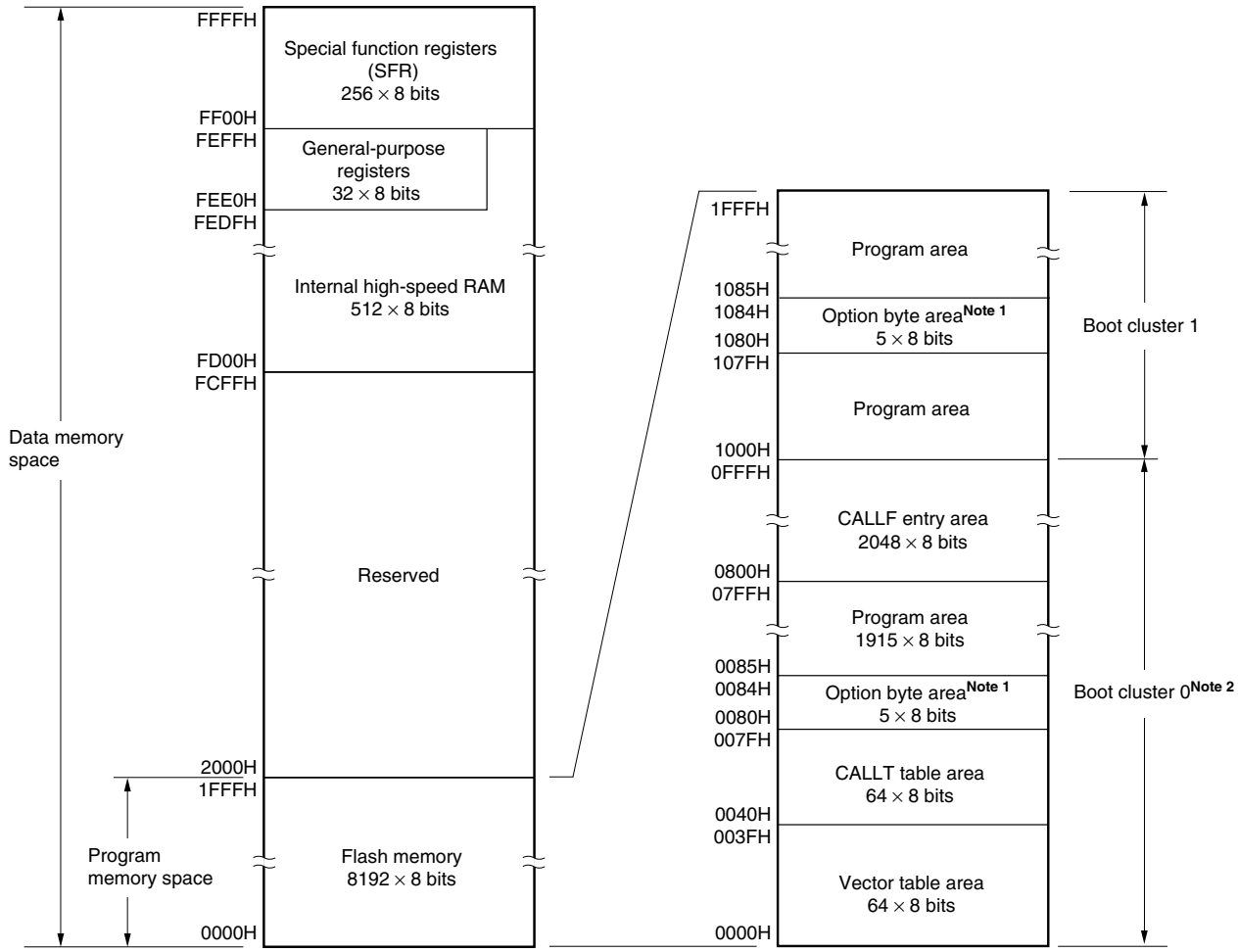

Notes 1. When boot swap is not used: Set the option bytes to 0080H to 0084H.
When boot swap is used: Set the option bytes to 0080H to 0084H and 1080H to 1084H.

2. Writing boot cluster 0 can be prohibited depending on the setting of security (see **27.8 Security Settings**).

Remark The flash memory is divided into blocks (one block = 1 KB). For the address values and block numbers, see **Table 3-3 Correspondence Between Address Values and Block Numbers in Flash Memory**.

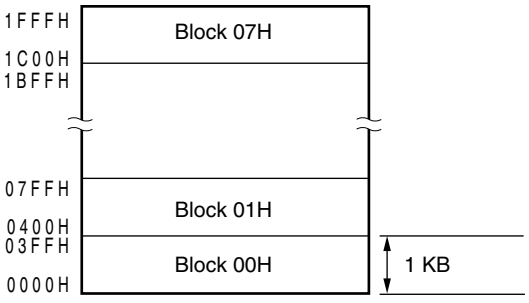

Figure 3-2. Memory Map (μPD78F0501, 78F0501A, 78F0511, 78F0511A, 78F0521, 78F0521A, 78F0531, and 78F0531A)

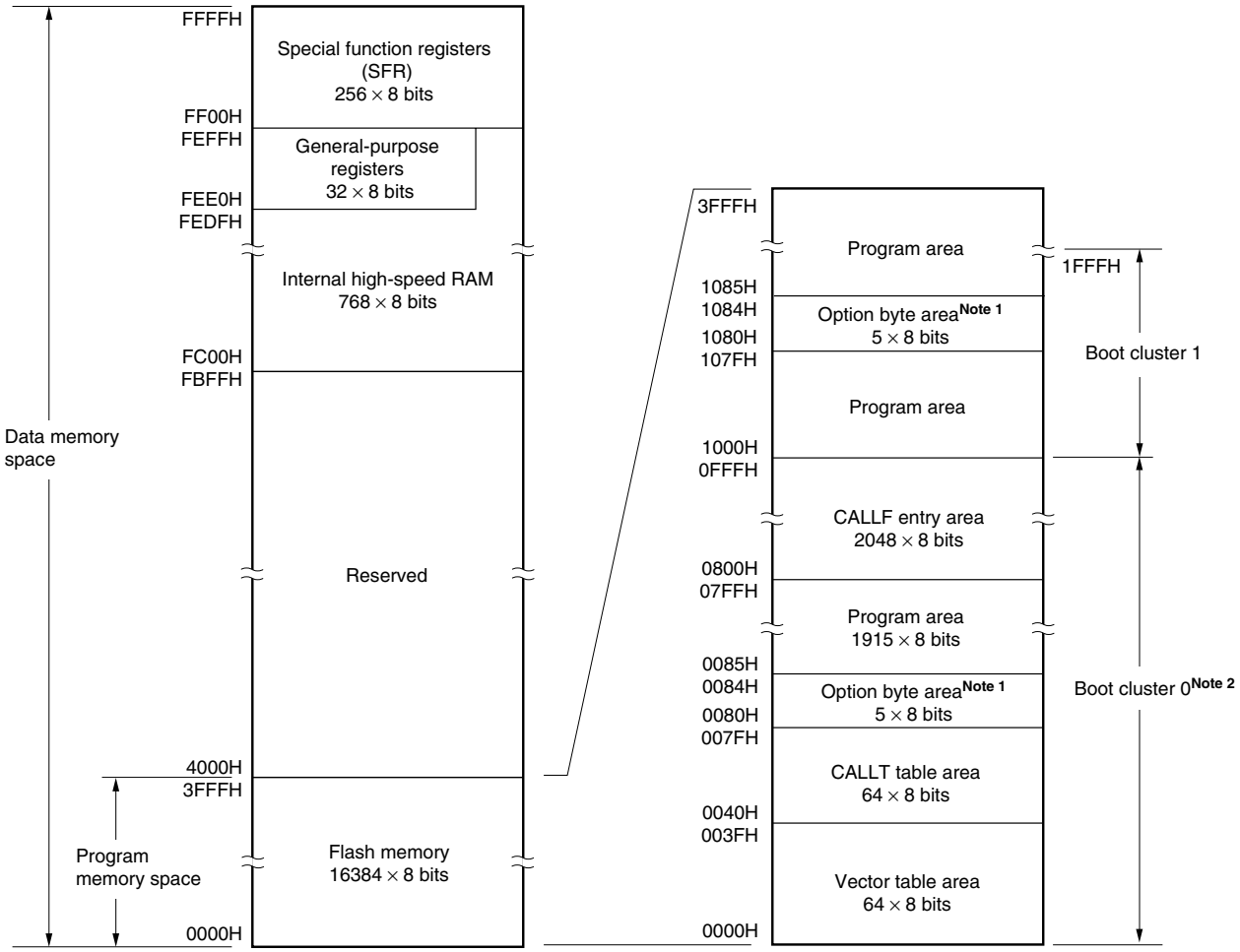

Notes 1. When boot swap is not used: Set the option bytes to 0080H to 0084H.
When boot swap is used: Set the option bytes to 0080H to 0084H and 1080H to 1084H.

2. Writing boot cluster 0 can be prohibited depending on the setting of security (see **27.8 Security Settings**).

Remark The flash memory is divided into blocks (one block = 1 KB). For the address values and block numbers, see **Table 3-3 Correspondence Between Address Values and Block Numbers in Flash Memory**.

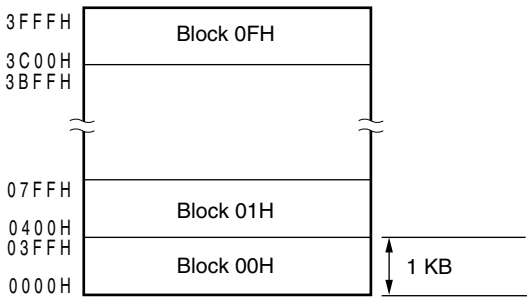

Figure 3-3. Memory Map (μPD78F0502, 78F0502A, 78F0512, 78F0512A, 78F0522, 78F0522A, 78F0532, and 78F0532A)

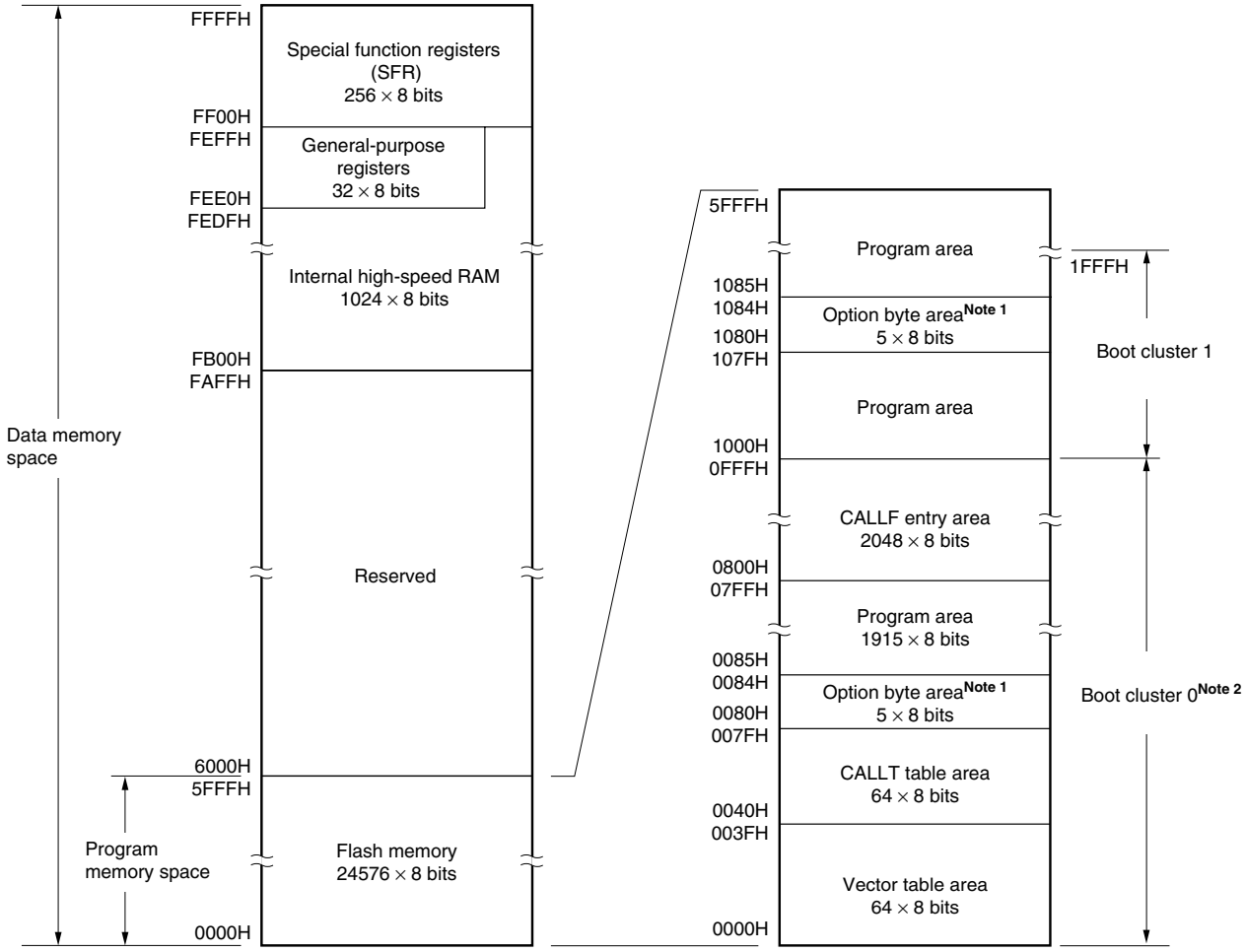

Notes 1. When boot swap is not used: Set the option bytes to 0080H to 0084H.
When boot swap is used: Set the option bytes to 0080H to 0084H and 1080H to 1084H.

2. Writing boot cluster 0 can be prohibited depending on the setting of security (see **27.8 Security Settings**).

Remark The flash memory is divided into blocks (one block = 1 KB). For the address values and block numbers, see **Table 3-3 Correspondence Between Address Values and Block Numbers in Flash Memory**.

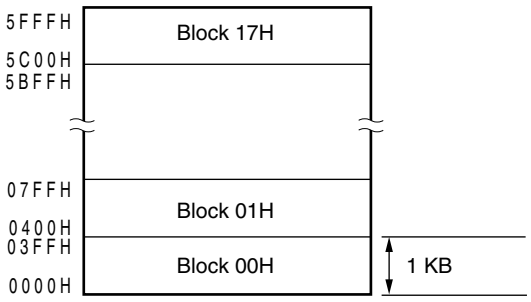

Figure 3-4. Memory Map (μPD78F0503, 78F0503A, 78F0513, 78F0513A, 78F0523, 78F0523A, 78F0533 and 78F0533A)

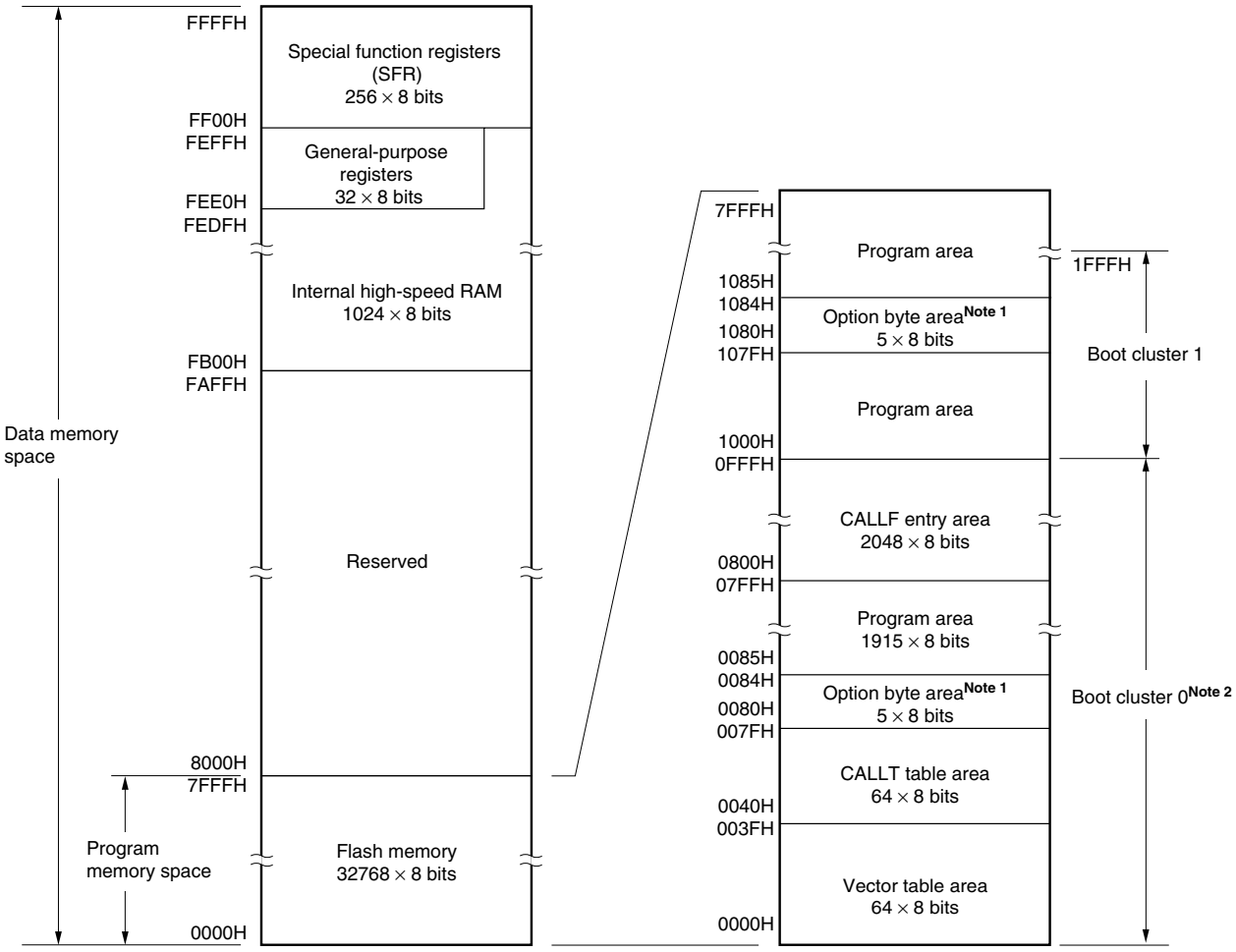

Notes 1. When boot swap is not used: Set the option bytes to 0080H to 0084H.
When boot swap is used: Set the option bytes to 0080H to 0084H and 1080H to 1084H.

2. Writing boot cluster 0 can be prohibited depending on the setting of security (see **27.8 Security Settings**).

Remark The flash memory is divided into blocks (one block = 1 KB). For the address values and block numbers, see **Table 3-3 Correspondence Between Address Values and Block Numbers in Flash Memory**.

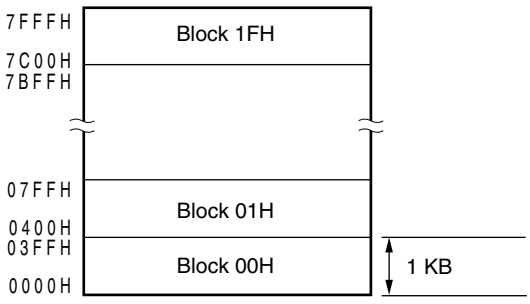

Figure 3-5. Memory Map (μPD78F0503D, 78F0503DA, 78F0513D, and 78F0513DA)

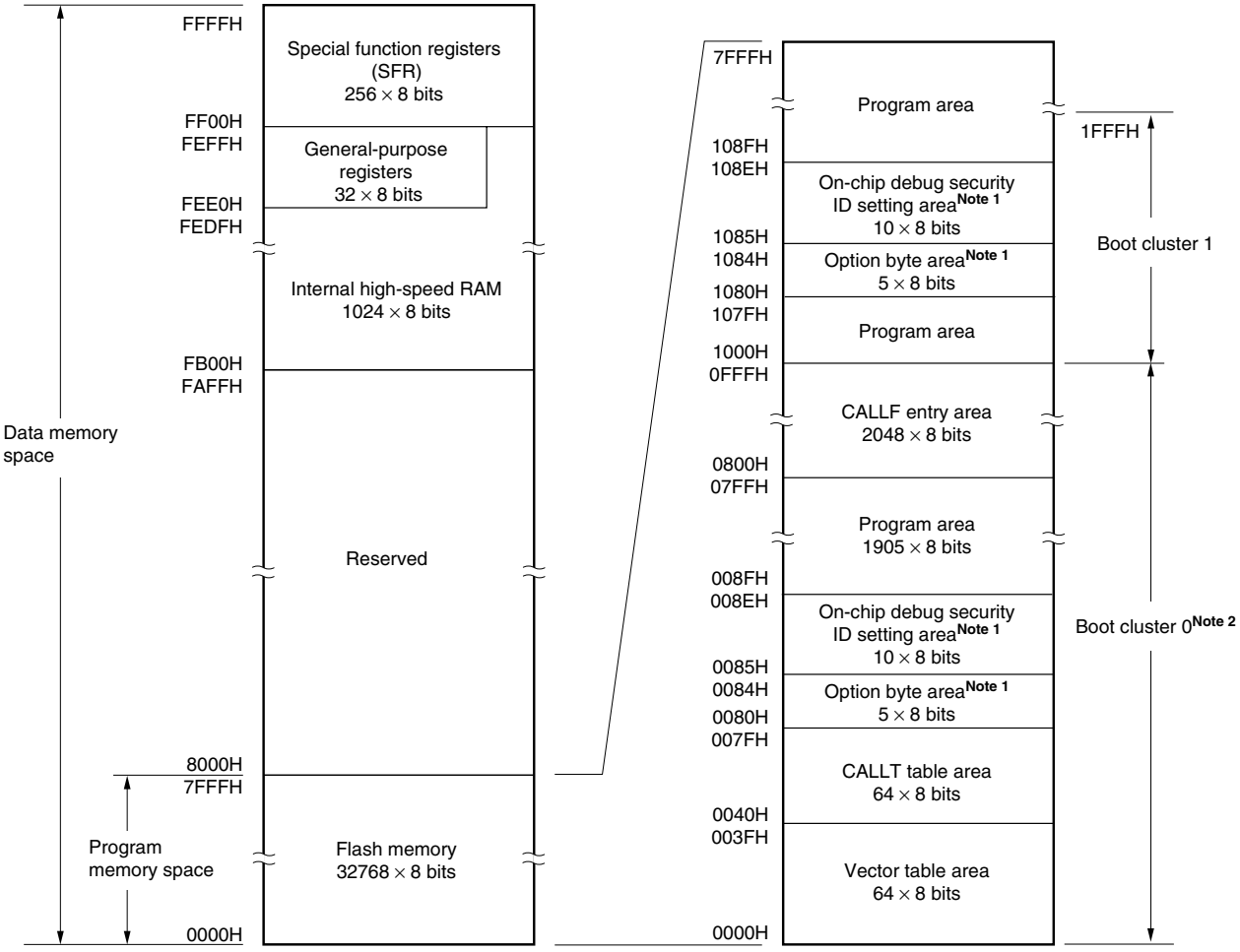

Notes 1. When boot swap is not used: Set the option bytes to 0080H to 0084H, and the on-chip debug security IDs to 0085H to 008EH.

When boot swap is used: Set the option bytes to 0080H to 0084H and 1080H to 1084H, and the on-chip debug security IDs to 0085H to 008EH and 1085H to 108EH.

2. Writing boot cluster 0 can be prohibited depending on the setting of security (see **27.8 Security Settings**).

Remark The flash memory is divided into blocks (one block = 1 KB). For the address values and block numbers, see **Table 3-3 Correspondence Between Address Values and Block Numbers in Flash Memory**.

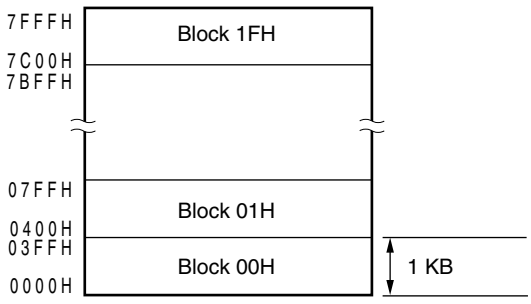

Figure 3-6. Memory Map (μPD78F0514, 78F0514A, 78F0524, 78F0524A, 78F0534, 78F0534A, 78F0544, and 78F0544A)

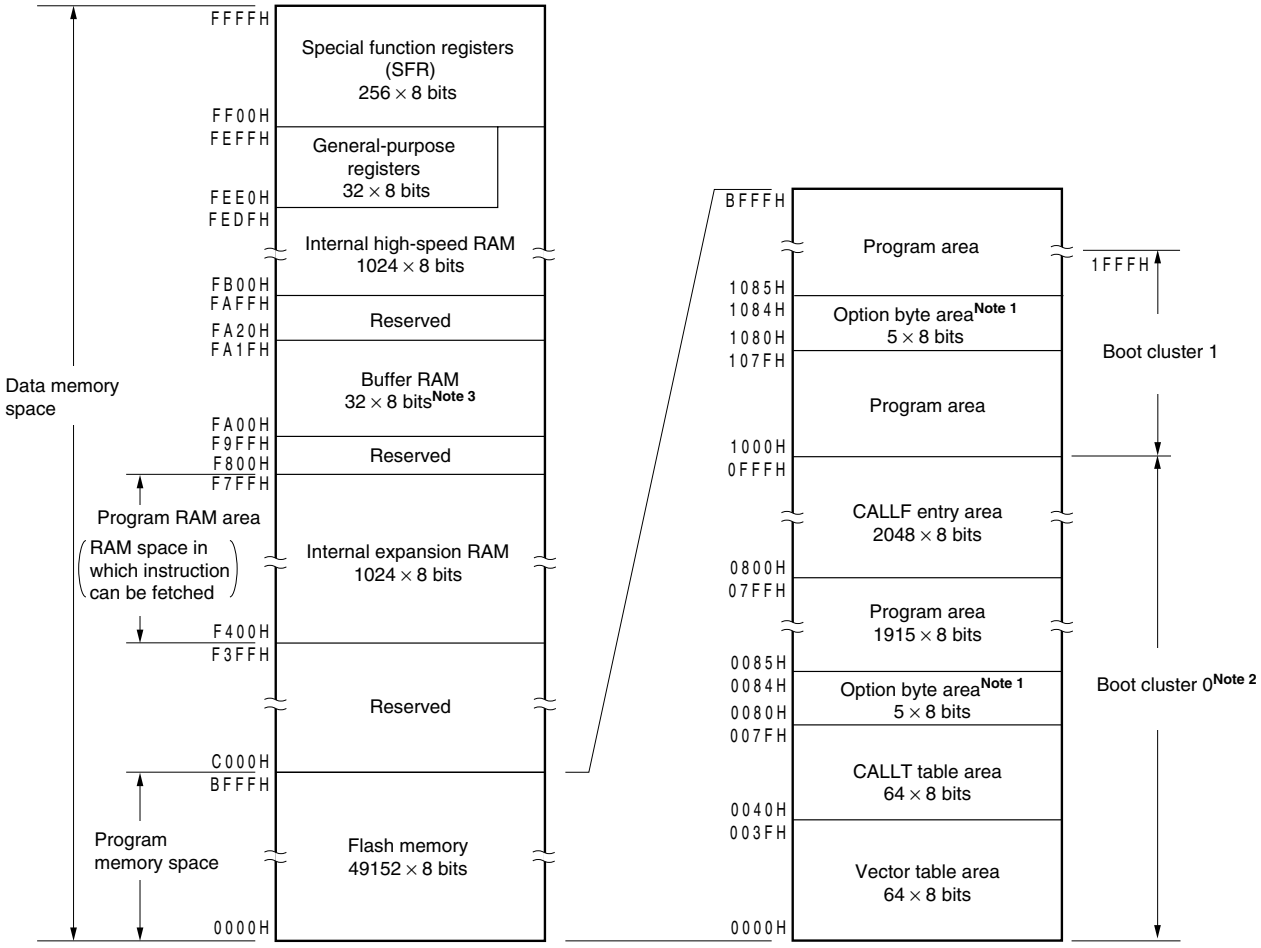

Notes 1. When boot swap is not used: Set the option bytes to 0080H to 0084H.
When boot swap is used: Set the option bytes to 0080H to 0084H and 1080H to 1084H.

2. Writing boot cluster 0 can be prohibited depending on the setting of security (see **27.8 Security Settings**).

3. The buffer RAM is incorporated only in the μPD78F0544 and 78F0544A (78K0/KF2). The area from FA00H to FA1FH cannot be used with the μPD78F0514, 78F0514A, 78F0524, 78F0524A, 78F0534, and 78F0534A.

Remark The flash memory is divided into blocks (one block = 1 KB). For the address values and block numbers, see **Table 3-3 Correspondence Between Address Values and Block Numbers in Flash Memory**.

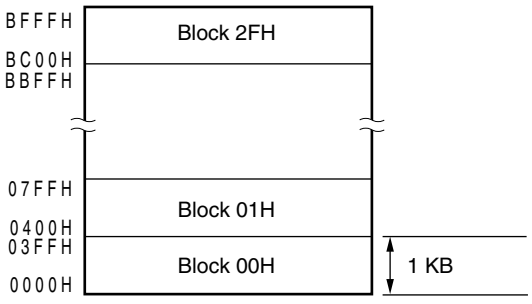

Figure 3-7. Memory Map (μPD78F0515, 78F0515A, 78F0525, 78F0525A, 78F0535, 78F0535A, 78F0545, and 78F0545A)

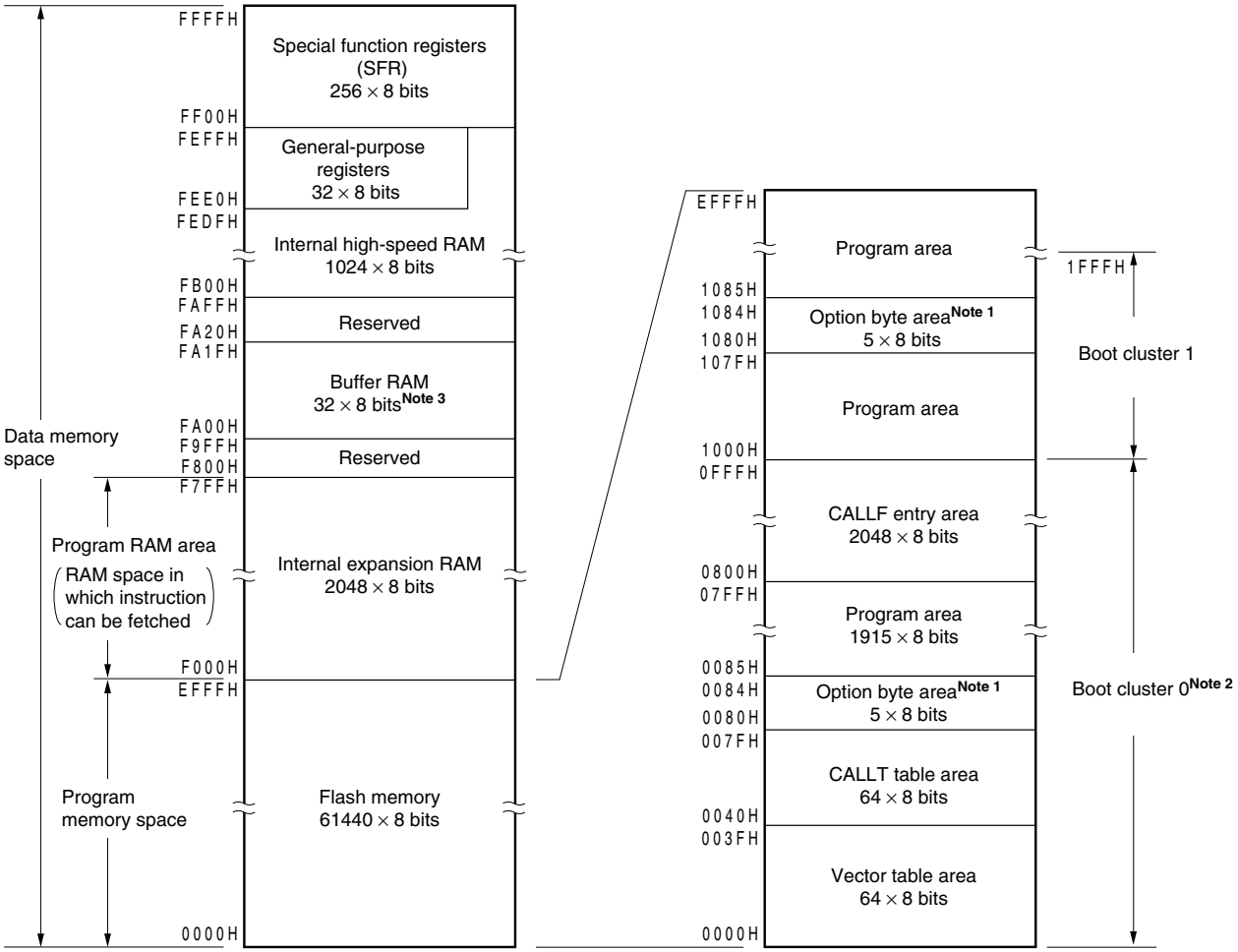

Notes 1. When boot swap is not used: Set the option bytes to 0080H to 0084H.
When boot swap is used: Set the option bytes to 0080H to 0084H and 1080H to 1084H.

2. Writing boot cluster 0 can be prohibited depending on the setting of security (see **27.8 Security Settings**).

3. The buffer RAM is incorporated only in the μPD78F0545 and 78F0545A (78K0/KF2). The area from FA00H to FA1FH cannot be used with the μPD78F0515, 78F0515A, 78F0525, 78F0525A, 78F0535, and 78F0535A.

Remark The flash memory is divided into blocks (one block = 1 KB). For the address values and block numbers, see **Table 3-3 Correspondence Between Address Values and Block Numbers in Flash Memory**.

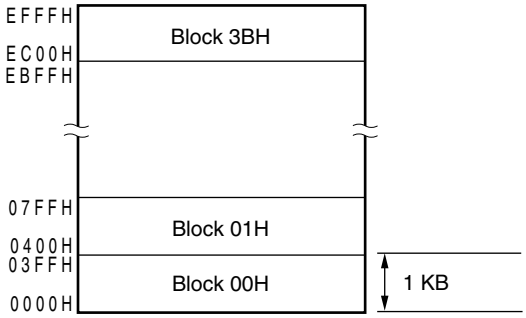

Figure 3-8. Memory Map (μPD78F0515D and 78F0515DA)

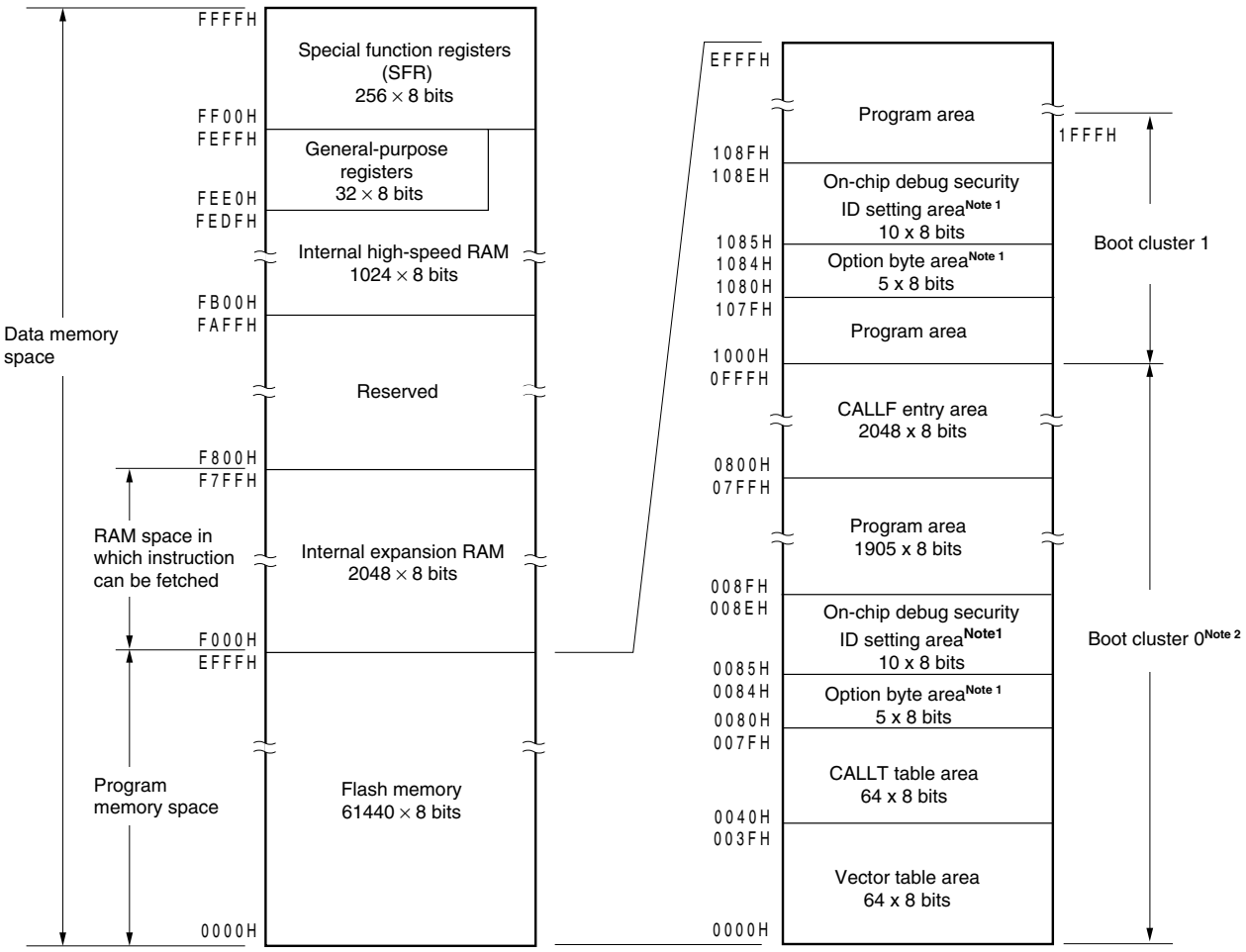

Notes 1. When boot swap is not used: Set the option bytes to 0080H to 0084H, and the on-chip debug security IDs to 0085H to 008EH.

When boot swap is used: Set the option bytes to 0080H to 0084H and 1080H to 1084H, and the on-chip debug security IDs to 0085H to 008EH and 1085H to 108EH.

2. Writing boot cluster 0 can be prohibited depending on the setting of security (see **27.8 Security Settings**).

Remark The flash memory is divided into blocks (one block = 1 KB). For the address values and block numbers, see **Table 3-3 Correspondence Between Address Values and Block Numbers in Flash Memory**.

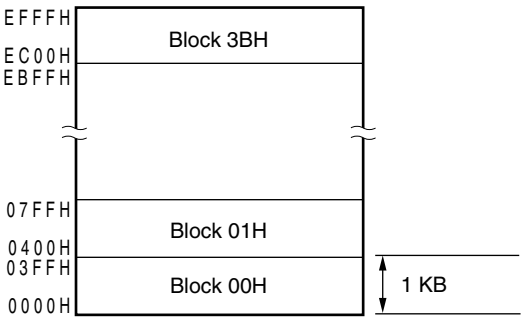

Figure 3-9. Memory Map (μPD78F0526, 78F0526A, 78F0536, 78F0536A, 78F0546, and 78F0546A)

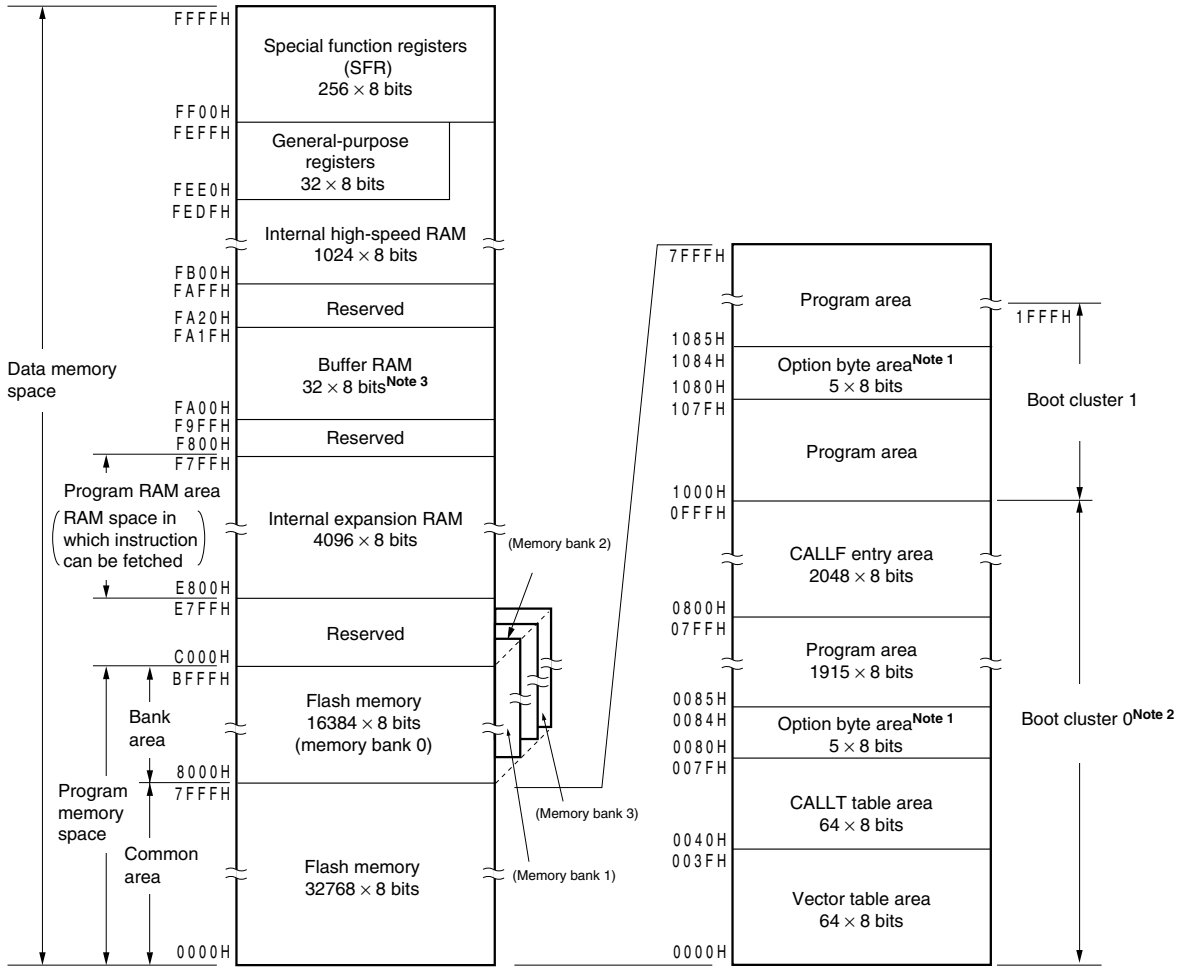

Notes 1. When boot swap is not used: Set the option bytes to 0080H to 0084H.
When boot swap is used: Set the option bytes to 0080H to 0084H and 1080H to 1084H.

2. Writing boot cluster 0 can be prohibited depending on the setting of security (see **27.8 Security Settings**).

3. The buffer RAM is incorporated only in the μPD78F0546 and 78F0546A (78K0/KF2). The area from FA00H to FA1FH cannot be used with the μPD78F0526, 78F0526A, 78F0536, and 78F0536A.

Remark The flash memory is divided into blocks (one block = 1 KB). For the address values and block numbers, see **Table 3-3 Correspondence Between Address Values and Block Numbers in Flash Memory**.

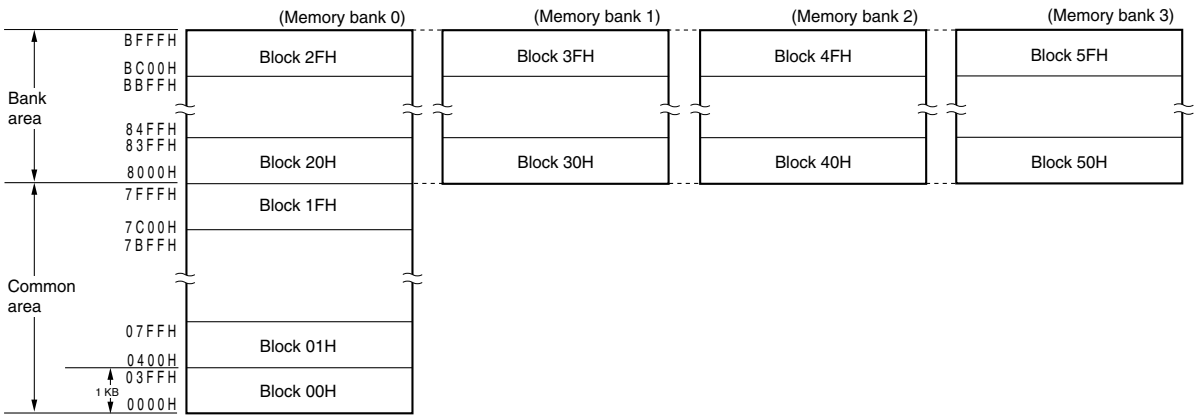

Figure 3-10. Memory Map (μPD78F0527, 78F0527A, 78F0537, 78F0537A, 78F0547, and 78F0547A)

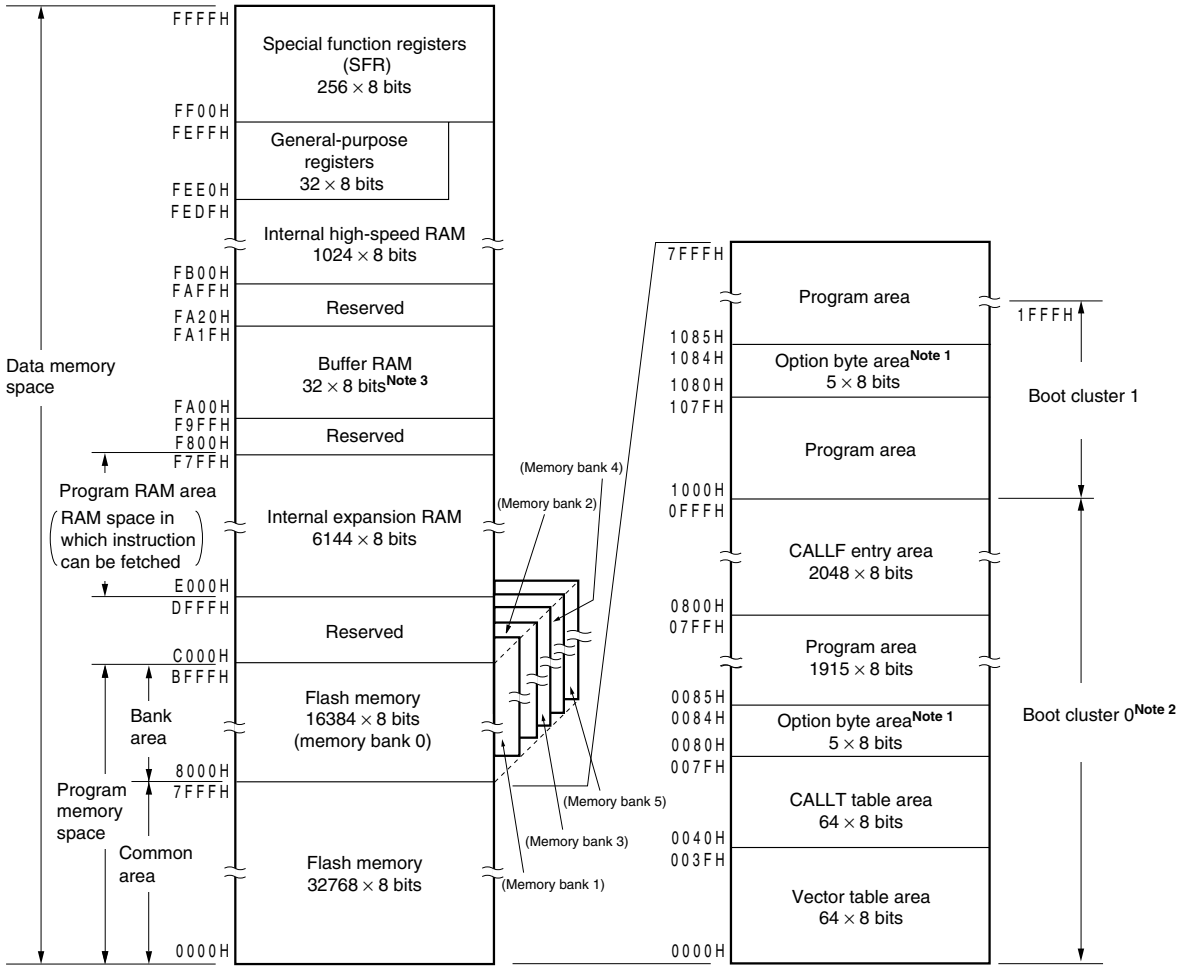

Notes 1. When boot swap is not used: Set the option bytes to 0080H to 0084H.
When boot swap is used: Set the option bytes to 0080H to 0084H and 1080H to 1084H.

2. Writing boot cluster 0 can be prohibited depending on the setting of security (see **27.8 Security Settings**).

3. The buffer RAM is incorporated only in the μPD78F0547 and 78F0547A (78K0/KF2). The area from FA00H to FA1FH cannot be used with the μPD78F0527, 78F0527A, 78F0537 and 78F0537A.

Remark The flash memory is divided into blocks (one block = 1 KB). For the address values and block numbers, see **Table 3-3 Correspondence Between Address Values and Block Numbers in Flash Memory**.

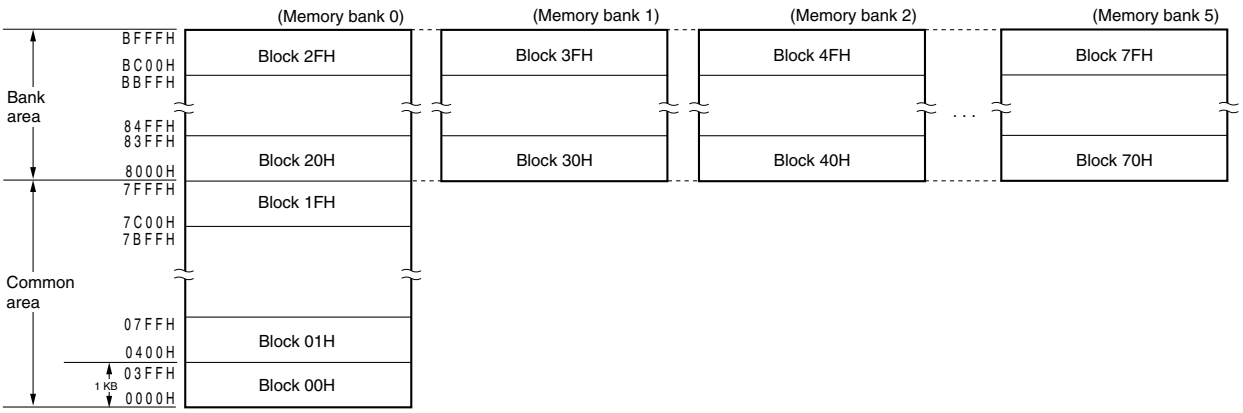

Figure 3-11. Memory Map (μPD78F0527D, 78F0527DA, 78F0537D, 78F0537DA, 78F0547D, and 78F0547DA)

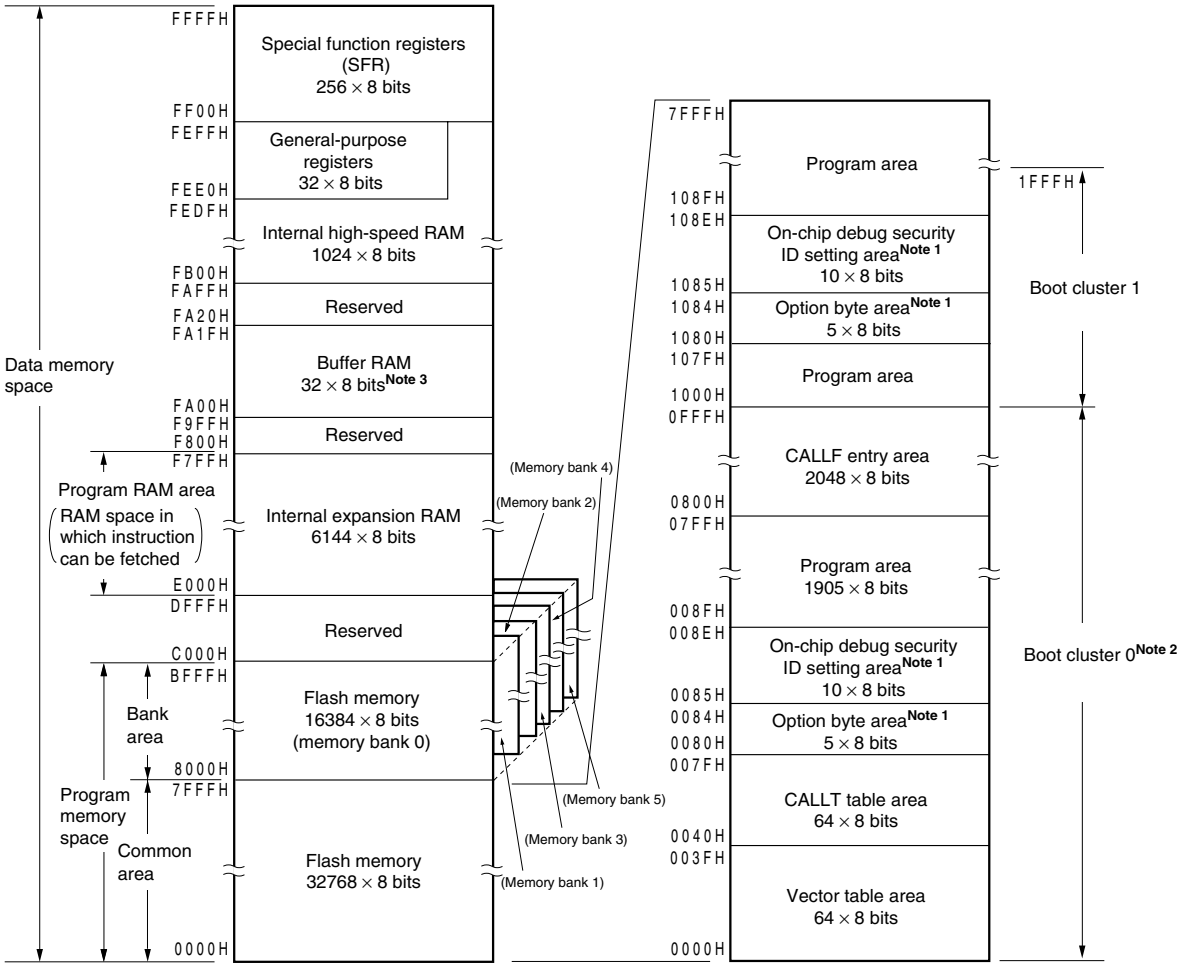

Notes 1. When boot swap is not used: Set the option bytes to 0080H to 0084H, and the on-chip debug security IDs to 0085H to 008EH.

When boot swap is used: Set the option bytes to 0080H to 0084H and 1080H to 1084H, and the on-chip debug security IDs to 0085H to 008EH and 1085H to 108EH.

2. Writing boot cluster 0 can be prohibited depending on the setting of security (see **27.8 Security Settings**).

3. The buffer RAM is incorporated only in the μPD78F0547D and 78F0547DA (78K0/KF2). The area from FA00H to FA1FH cannot be used with the μPD78F0527D, 78F0527DA, 78F0537D and 78F0537DA.

Remark The flash memory is divided into blocks (one block = 1 KB). For the address values and block numbers, see **Table 3-3 Correspondence Between Address Values and Block Numbers in Flash Memory**.

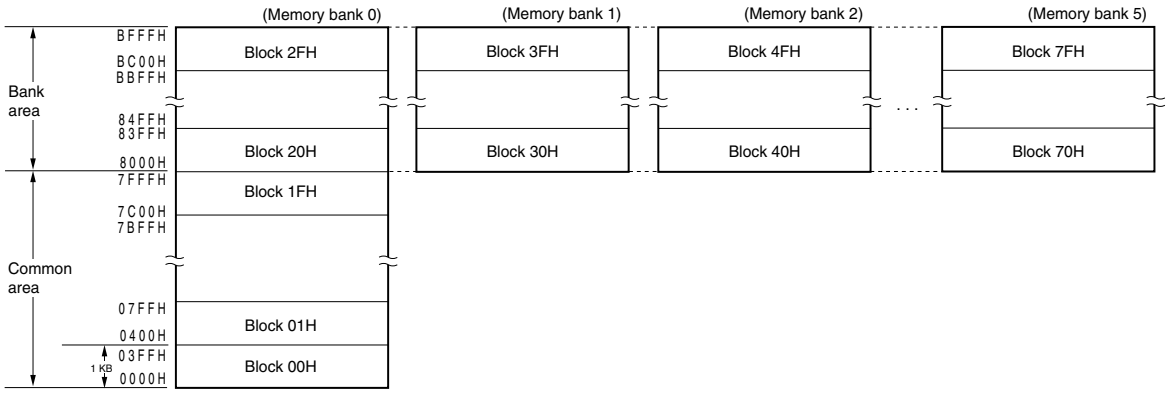

Correspondence between the address values and block numbers in the flash memory are shown below.

Table 3-3. Correspondence Between Address Values and Block Numbers in Flash Memory (1/2)

(1) Products whose flash memory is less than 60 KB (without memory bank)

Address Value	Block Number	Address Value	Block Number	Address Value	Block Number	Address Value	Block Number
0000H to 03FFH	00H	4000H to 43FFH	10H	8000H to 83FFH	20H	C000H to C3FFH	30H
0400H to 07FFH	01H	4400H to 47FFH	11H	8400H to 87FFH	21H	C400H to C7FFH	31H
0800H to 0BFFH	02H	4800H to 4BFFH	12H	8800H to 8BFFH	22H	C800H to CBFFH	32H
0C00H to 0FFFH	03H	4C00H to 4FFFH	13H	8C00H to 8FFFH	23H	CC00H to CFFFH	33H
1000H to 13FFH	04H	5000H to 53FFH	14H	9000H to 93FFH	24H	D000H to D3FFH	34H
1400H to 17FFH	05H	5400H to 57FFH	15H	9400H to 97FFH	25H	D400H to D7FFH	35H
1800H to 1BFFH	06H	5800H to 5BFFH	16H	9800H to 9BFFH	26H	D800H to DBFFH	36H
1C00H to 1FFFH	07H	5C00H to 5FFFH	17H	9C00H to 9FFFH	27H	DC00H to DFFFH	37H
2000H to 23FFH	08H	6000H to 63FFH	18H	A000H to A3FFH	28H	E000H to E3FFH	38H
2400H to 27FFH	09H	6400H to 67FFH	19H	A400H to A7FFH	29H	E400H to E7FFH	39H
2800H to 2BFFH	0AH	6800H to 6BFFH	1AH	A800H to ABFFH	2AH	E800H to EBFFH	3AH
2C00H to 2FFFH	0BH	6C00H to 6FFFH	1BH	AC00H to AFFFH	2BH	EC00H to EFFFH	3BH
3000H to 33FFH	0CH	7000H to 73FFH	1CH	B000H to B3FFH	2CH		
3400H to 37FFH	0DH	7400H to 77FFH	1DH	B400H to B7FFH	2DH		
3800H to 3BFFH	0EH	7800H to 7BFFH	1EH	B800H to BBFFH	2EH		
3C00H to 3FFFH	0FH	7C00H to 7FFFH	1FH	BC00H to BFFFH	2FH		

Remark μPD78F0500, 78F0500A: Block numbers 00H to 07H
μPD78F05x1, 78F05x1A (x = 0 to 3): Block numbers 00H to 0FH
μPD78F05x2, 78F05x2A (x = 0 to 3): Block numbers 00H to 17H
μPD78F05x3, 78F05x3A (x = 0 to 3),
78F0503D, 78F0503DA, 78F0513D, 78F0513DA: Block numbers 00H to 1FH
μPD78F05x4, 78F05x4A (x = 1 to 4): Block numbers 00H to 2FH
μPD78F05x5, 78F05x5A (x = 1 to 4), 78F0515D, 78F0515DA: Block numbers 00H to 3BH

Table 3-3. Correspondence Between Address Values and Block Numbers in Flash Memory (2/2)

(2) Products whose flash memory is at least 96 KB (with memory bank)

Address Value	Block Number	Address Value	Memory Bank	Block Number	Address Value	Memory Bank	Block Number	Address Value	Memory Bank	Block Number
0000H to 03FFH	00H	8000H to 83FFH	0	20H	8000H to 83FFH	2	40H	8000H to 83FFH	4	60H
0400H to 07FFH	01H	8400H to 87FFH		21H	8400H to 87FFH		41H	8400H to 87FFH		61H
0800H to 0BFFH	02H	8800H to 8BFFH		22H	8800H to 8BFFH		42H	8800H to 8BFFH		62H
0C00H to 0FFFH	03H	8C00H to 8FFFH		23H	8C00H to 8FFFH		43H	8C00H to 8FFFH		63H
1000H to 13FFH	04H	9000H to 93FFH		24H	9000H to 93FFH		44H	9000H to 93FFH		64H
1400H to 17FFH	05H	9400H to 97FFH		25H	9400H to 97FFH		45H	9400H to 97FFH		65H
1800H to 1BFFH	06H	9800H to 9BFFH		26H	9800H to 9BFFH		46H	9800H to 9BFFH		66H
1C00H to 1FFFH	07H	9C00H to 9FFFH		27H	9C00H to 9FFFH		47H	9C00H to 9FFFH		67H
2000H to 23FFH	08H	A000H to A3FFH		28H	A000H to A3FFH		48H	A000H to A3FFH		68H
2400H to 27FFH	09H	A400H to A7FFH		29H	A400H to A7FFH		49H	A400H to A7FFH		69H
2800H to 2BFFH	0AH	A800H to ABFFH		2AH	A800H to ABFFH		4AH	A800H to ABFFH		6AH
2C00H to 2FFFH	0BH	AC00H to AFFFH		2BH	AC00H to AFFFH		4BH	AC00H to AFFFH		6BH
3000H to 33FFH	0CH	B000H to B3FFH		2CH	B000H to B3FFH		4CH	B000H to B3FFH		6CH
3400H to 37FFH	0DH	B400H to B7FFH		2DH	B400H to B7FFH		4DH	B400H to B7FFH		6DH
3800H to 3BFFH	0EH	B800H to BBFFH		2EH	B800H to BBFFH		4EH	B800H to BBFFH		6EH
3C00H to 3FFFH	0FH	BC00H to BFFFH		2FH	BC00H to BFFFH		4FH	BC00H to BFFFH		6FH
4000H to 43FFH	10H	8000H to 83FFH	1	30H	8000H to 83FFH	3	50H	8000H to 83FFH	5	70H
4400H to 47FFH	11H	8400H to 87FFH		31H	8400H to 87FFH		51H	8400H to 87FFH		71H
4800H to 4BFFH	12H	8800H to 8BFFH		32H	8800H to 8BFFH		52H	8800H to 8BFFH		72H
4C00H to 4FFFH	13H	8C00H to 8FFFH		33H	8C00H to 8FFFH		53H	8C00H to 8FFFH		73H
5000H to 53FFH	14H	9000H to 93FFH		34H	9000H to 93FFH		54H	9000H to 93FFH		74H
5400H to 57FFH	15H	9400H to 97FFH		35H	9400H to 97FFH		55H	9400H to 97FFH		75H
5800H to 5BFFH	16H	9800H to 9BFFH		36H	9800H to 9BFFH		56H	9800H to 9BFFH		76H
5C00H to 5FFFH	17H	9C00H to 9FFFH		37H	9C00H to 9FFFH		57H	9C00H to 9FFFH		77H
6000H to 63FFH	18H	A000H to A3FFH		38H	A000H to A3FFH		58H	A000H to A3FFH		78H
6400H to 67FFH	19H	A400H to A7FFH		39H	A400H to A7FFH		59H	A400H to A7FFH		79H
6800H to 6BFFH	1AH	A800H to ABFFH		3AH	A800H to ABFFH		5AH	A800H to ABFFH		7AH
6C00H to 6FFFH	1BH	AC00H to AFFFH		3BH	AC00H to AFFFH		5BH	AC00H to AFFFH		7BH
7000H to 73FFH	1CH	B000H to B3FFH		3CH	B000H to B3FFH		5CH	B000H to B3FFH		7CH
7400H to 77FFH	1DH	B400H to B7FFH		3DH	B400H to B7FFH		5DH	B400H to B7FFH		7DH
7800H to 7BFFH	1EH	B800H to BBFFH		3EH	B800H to BBFFH		5EH	B800H to BBFFH		7EH
7C00H to 7FFFH	1FH	BC00H to BFFFH		3FH	BC00H to BFFFH		5FH	BC00H to BFFFH		7FH

Remark μPD78F05x6, 78F05x6A (x = 2 to 4): Block numbers 00H to 5FH
μPD78F05x7, 78F05x7A, 78F05x7D, 78F05x7DA (x = 2 to 4): Block numbers 00H to 7FH

3.1.1 Internal program memory space

The internal program memory space stores the program and table data. Normally, it is addressed with the program counter (PC).

78K0/Kx2 microcontrollers incorporate internal ROM (flash memory), as shown below.

Table 3-4. Internal ROM Capacity

78K0/KB2	78K0/KC2		78K0/KD2	78K0/KE2	78K0/KF2	Internal ROM (Flash memory)
30/36 Pins	38/44 Pins	48 Pins	52 Pins	64 Pins	80 Pins	
μPD78F0500, PD78F0500A	–	–	–	–	–	8192 × 8 bits (0000H to 1FFFH)
μPD78F0501, 78F0501A	μPD78F0511, 78F0511A	μPD78F0511, 78F0511A	μPD78F0521, 78F0521A	μPD78F0531, 78F0531A	–	16384 × 8 bits (0000H to 3FFFH)
μPD78F0502, 78F0502A	μPD78F0512, 78F0512A	μPD78F0512, 78F0512A	μPD78F0522, 78F0522A	μPD78F0532, 78F0532A	–	24576 × 8 bits (0000H to 5FFFH)
μPD78F0503D, 78F0503DA	μPD78F0513D, 78F0513DA	μPD78F0513, 78F0513A	μPD78F0523, 78F0523A	μPD78F0533, 78F0533A	–	32768 × 8 bits (0000H to 7FFFH)
μPD78F0503, 78F0503A	μPD78F0513, 78F0513A					
–	–	μPD78F0514, 78F0514A	μPD78F0524, 78F0524A	μPD78F0534, 78F0534A	μPD78F0544, 78F0544A	49152 × 8 bits (0000H to BFFFH)
–	–	μPD78F0515D, 78F0515DA	μPD78F0525, 78F0525A	μPD78F0535, 78F0535A	μPD78F0545, 78F0545A	61440 × 8 bits (0000H to EFFFH)
		μPD78F0515, 78F0515A				
–	–	–	μPD78F0526, 78F0526A	μPD78F0536, 78F0536A	μPD78F0546, 78F0546A	98304 × 8 bits (0000H to 7FFFH (common area: 32 KB) + 8000H to BFFFH (bank area: 16 KB) × 4)
–	–	–	μPD78F0527D, 78F0527DA	μPD78F0537D, 78F0537DA	μPD78F0547D, 78F0547DA	131072 × 8 bits (0000H to 7FFFH (common area: 32 KB) + 8000H to BFFFH (bank area: 16 KB) × 6)
			μPD78F0527, 78F0527A	μPD78F0537, 78F0537A	μPD78F0547, 78F0547A	

The internal program memory space is divided into the following areas.

(1) Vector table area

The 64-byte area 0000H to 003FH is reserved as a vector table area. The program start addresses for branch upon reset or generation of each interrupt request are stored in the vector table area.

Of the 16-bit address, the lower 8 bits are stored at even addresses and the higher 8 bits are stored at odd addresses.

Table 3-5. Vector Table

Vector Table Address	Interrupt Source	KB2	KC2	KD2	KE2	KF2
0000H	$\overline{\text{RESET}}$ input, POC, LVI, WDT	√	√	√	√	√
0004H	INTLVI	√	√	√	√	√
0006H	INTP0	√	√	√	√	√
0008H	INTP1	√	√	√	√	√
000AH	INTP2	√	√	√	√	√
000CH	INTP3	√	√	√	√	√
000EH	INTP4	√	√	√	√	√
0010H	INTP5	√	√	√	√	√
0012H	INTSRE6	√	√	√	√	√
0014H	INTSR6	√	√	√	√	√
0016H	INTST6	√	√	√	√	√
0018H	INTCSI10/INTST0	√	√	√	√	√
001AH	INTTMH1	√	√	√	√	√
001CH	INTTMH0	√	√	√	√	√
001EH	INTTM50	√	√	√	√	√
0020H	INTTM000	√	√	√	√	√
0022H	INTTM010	√	√	√	√	√
0024H	INTAD	√	√	√	√	√
0026H	INTSR0	√	√	√	√	√
0028H	INTWTI	–	√	√	√	√
002AH	INTTM51	√	√	√	√	√
002CH	INTKR	–	√	√	√	√
002EH	INTWT	–	√	√	√	√
0030H	INTP6	–	√Note 1	√	√	√
0032H	INTP7	–	–	–	√	√
0034H	INTIIC0/NTDMU	√Note 2	√Note 2	√Note 2	√Note 2	√
0036H	INTCSI11	–	–	–	√Note 3	√
0038H	INTTM001	–	–	–	√Note 3	√
003AH	INTTM011	–	–	–	√Note 3	√
003CH	INTACSI	–	–	–	–	√
003EH	BRK	√	√	√	√	√

Notes 1. 48-pin products only.

2. INTIIC0: products whose flash memory is less than 32 KB
INTIIC/INTDMU: products whose flash memory is at least 48 KB

3. Products whose flash memory is at least 48 KB only.

Remark √: Mounted, –: Not mounted

(2) CALLT instruction table area

The 64-byte area 0040H to 007FH can store the subroutine entry address of a 1-byte call instruction (CALLT).

(3) Option byte area

A 5-byte area of 0080H to 0084H and 1080H to 1084H can be used as an option byte area. Set the option byte at 0080H to 0084H when the boot swap is not used, and at 0080H to 0084H and 1080H to 1084H when the boot swap is used. For details, see **CHAPTER 26 OPTION BYTE**.

(4) CALLF instruction entry area

The area 0800H to 0FFFH can perform a direct subroutine call with a 2-byte call instruction (CALLF).

(5) On-chip debug security ID setting area (μPD78F05xxD and 78F05xxDA only)

A 10-byte area of 0085H to 008EH and 1085H to 108EH can be used as an on-chip debug security ID setting area. Set the on-chip debug security ID of 10 bytes at 0085H to 008EH when the boot swap is not used and at 0085H to 008EH and 1085H to 108EH when the boot swap is used. For details, see **CHAPTER 28 ON-CHIP DEBUG FUNCTION (μPD78F05xxD and 78F05xxDA ONLY)**.

3.1.2 Memory bank (products whose flash memory is at least 96 KB only)

The 16 KB area 8000H to BFFFH is assigned to memory banks 0 to 3 in the μPD78F05x6 and 78F05x6A (x = 2 to 4), and assigned to memory banks 0 to 5 in the μPD78F05x7, 78F05x7A, 78F05x7D and 78F05x7DA (x = 2 to 4).

The banks are selected by using a memory bank select register (BANK). For details, see **CHAPTER 4 MEMORY BANK SELECT FUNCTION (PRODUCTS WHOSE FLASH MEMORY IS AT LEAST 96 KB ONLY)**.

Cautions 1. Instructions cannot be fetched between different memory banks.

2. Branch and access cannot be directly executed between different memory banks. Execute branch or access between different memory banks via the common area.

3. Allocate interrupt servicing in the common area.

4. An instruction that extends from 7FFFH to 8000H can only be executed in memory bank 0.

3.1.3 Internal data memory space

78K0/Kx2 microcontrollers incorporate the following RAMs.

(1) Internal high-speed RAM

The 32-byte area FEE0H to FEFFH is assigned to four general-purpose register banks consisting of eight 8-bit registers per bank.

This area cannot be used as a program area in which instructions are written and executed.

The internal high-speed RAM can also be used as a stack memory.

Table 3-6. Internal High-Speed RAM Capacity

78K0/KB2	78K0/KC2		78K0/KD2	78K0/KE2	78K0/KF2	Internal High-Speed RAM
30/36 Pins	38/44 Pins	48 Pins	52 Pins	64 Pins	80 Pins	
μPD78F0500, PD78F0500A	–	–	–	–	–	512 × 8 bits (FD00H to FEFFH)
μPD78F0501, 78F0501A	μPD78F0511, 78F0511A	μPD78F0511, 78F0511A	μPD78F0521, 78F0521A	μPD78F0531, 78F0531A	–	768 × 8 bits (FC00H to FEFFH)
μPD78F0502, 78F0502A	μPD78F0512, 78F0512A	μPD78F0512, 78F0512A	μPD78F0522, 78F0522A	μPD78F0532, 78F0532A	–	1024 × 8 bits (FB00H to FEFFH)
μPD78F0503D, 78F0503DA	μPD78F0513D, 78F0513DA	μPD78F0513, 78F0513A	μPD78F0523, 78F0523A	μPD78F0533, 78F0533A	–	
μPD78F0503, 78F0503A	μPD78F0513, 78F0513A					
–	–	μPD78F0514, 78F0514A	μPD78F0524, 78F0524A	μPD78F0534, 78F0534A	μPD78F0544, 78F0544A	
–	–	μPD78F0515D, 78F0515DA	μPD78F0525, 78F0525A	μPD78F0535, 78F0535A	μPD78F0545, 78F0545A	
		μPD78F0515, 78F0515A				
–	–	–	μPD78F0526, 78F0526A	μPD78F0536, 78F0536A	μPD78F0546, 78F0546A	
–	–	–	μPD78F0527D, 78F0527DA	μPD78F0537D, 78F0537DA	μPD78F0547D, 78F0547DA	
			μPD78F0527, 78F0527A	μPD78F0537, 78F0537A	μPD78F0547, 78F0547A	

(2) Internal expansion RAM

The internal expansion RAM can also be used as a normal data area similar to the internal high-speed RAM, as well as a program area in which instructions can be written and executed.

The internal expansion RAM cannot be used as a stack memory.

Table 3-7. Internal Expansion RAM Capacity

78K0/KB2	78K0/KC2		78K0/KD2	78K0/KE2	78K0/KF2	Internal Expansion RAM
30/36 Pins	38/44 Pins	48 Pins	52 Pins	64 Pins	80 Pins	
μPD78F0500, PD78F0500A	–	–	–	–	–	–
μPD78F0501, 78F0501A	μPD78F0511, 78F0511A	μPD78F0511, 78F0511A	μPD78F0521, 78F0521A	μPD78F0531, 78F0531A	–	
μPD78F0502, 78F0502A	μPD78F0512, 78F0512A	μPD78F0512, 78F0512A	μPD78F0522, 78F0522A	μPD78F0532, 78F0532A	–	
μPD78F0503D, 78F0503DA	μPD78F0513D, 78F0513DA	μPD78F0513, 78F0513A	μPD78F0523, 78F0523A	μPD78F0533, 78F0533A	–	
μPD78F0503, 78F0503A	μPD78F0513, 78F0513A					
–	–	μPD78F0514, 78F0514A	μPD78F0524, 78F0524A	μPD78F0534, 78F0534A	μPD78F0544, 78F0544A	1024 × 8 bits (F400H to F7FFH)
–	–	μPD78F0515D, 78F0515DA	μPD78F0525, 78F0525A	μPD78F0535, 78F0535A	μPD78F0545, 78F0545A	2048 × 8 bits (F000H to F7FFH)
		μPD78F0515, 78F0515A				
–	–	–	μPD78F0526, 78F0526A	μPD78F0536, 78F0536A	μPD78F0546, 78F0546A	4096 × 8 bits (E800H to F7FFH)
–	–	–	μPD78F0527D, 78F0527DA	μPD78F0537D, 78F0537DA	μPD78F0547D, 78F0547DA	6144 × 8 bits (E000H to F7FFH)
			μPD78F0527, 78F0527A	μPD78F0537, 78F0537A	μPD78F0547, 78F0547A	

(3) Buffer RAM (78K0/KF2 only)

The 78K0/KF2 products incorporate 32 bytes (FA00H to FA1FH) of buffer RAM. The buffer RAM can be used for transfer in CSI with automatic transmit/receive function.

3.1.4 Special function register (SFR) area

On-chip peripheral hardware special function registers (SFRs) are allocated in the area FF00H to FFFFH (see **Table 3-8 Special Function Register List** in **3.2.3 Special function registers (SFRs)**).

Caution Do not access addresses to which SFRs are not assigned.

3.1.5 Data memory addressing

Addressing refers to the method of specifying the address of the instruction to be executed next or the address of the register or memory relevant to the execution of instructions.

Several addressing modes are provided for addressing the memory relevant to the execution of instructions for the 78K0/Kx2 microcontrollers, based on operability and other considerations. For areas containing data memory in particular, special addressing methods designed for the functions of special function registers (SFR) and general-purpose registers are available for use. Figures 3-12 to 3-19 show correspondence between data memory and addressing. For details of each addressing mode, see **3.4 Operand Address Addressing**.

Figure 3-12. Correspondence Between Data Memory and Addressing (μPD78F0500 and 78F0500A)

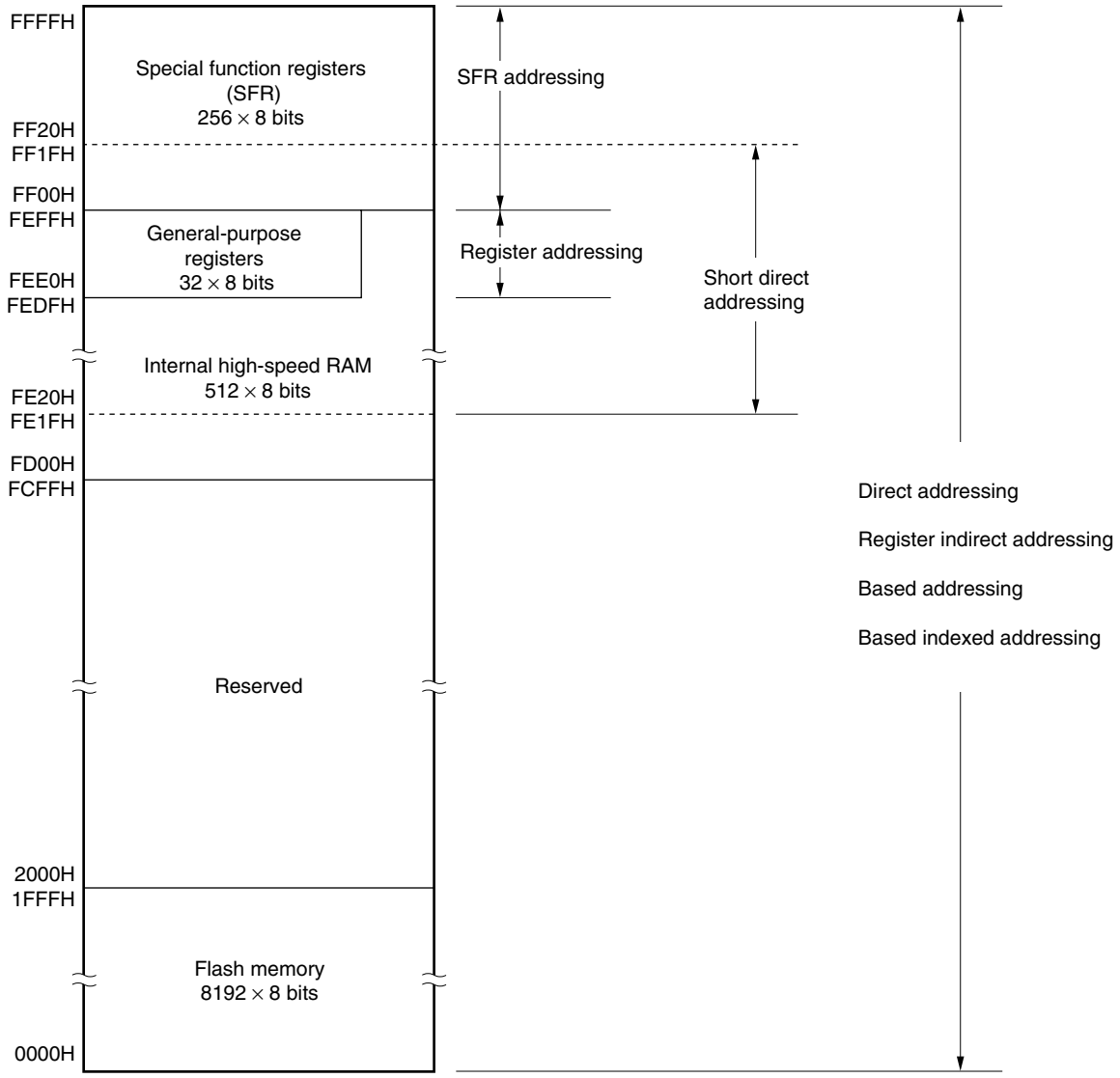

Figure 3-13. Correspondence Between Data Memory and Addressing
(μPD78F0501, 78F0501A, 78F0511, 78F0511A, 78F0521, 78F0521A, 78F0531, and 78F0531A)

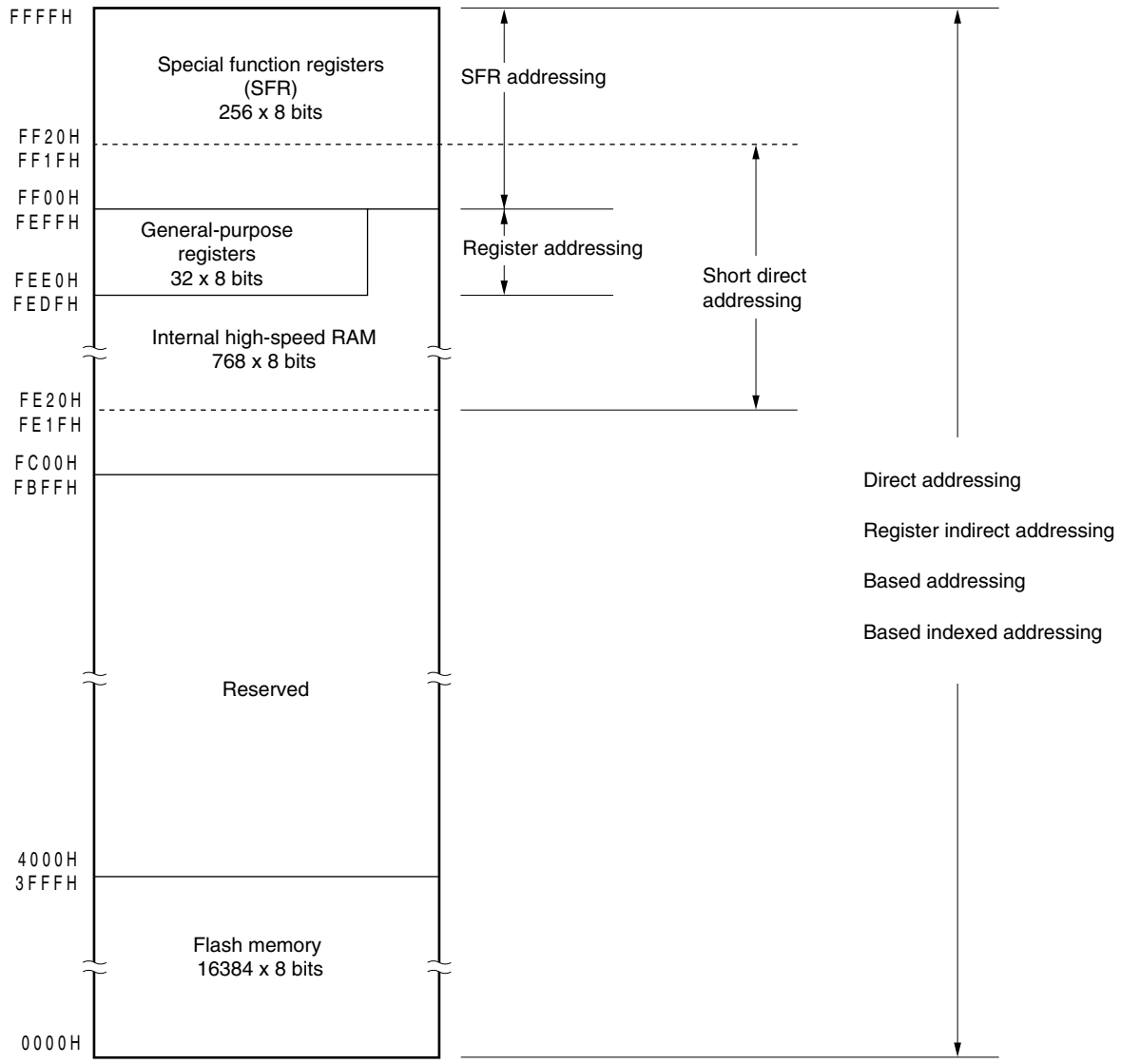

Figure 3-14. Correspondence Between Data Memory and Addressing
(μPD78F0502, 78F0502A, 78F0512, 78F0512A, 78F0522, 78F0522A, 78F0532, and 78F0532A)

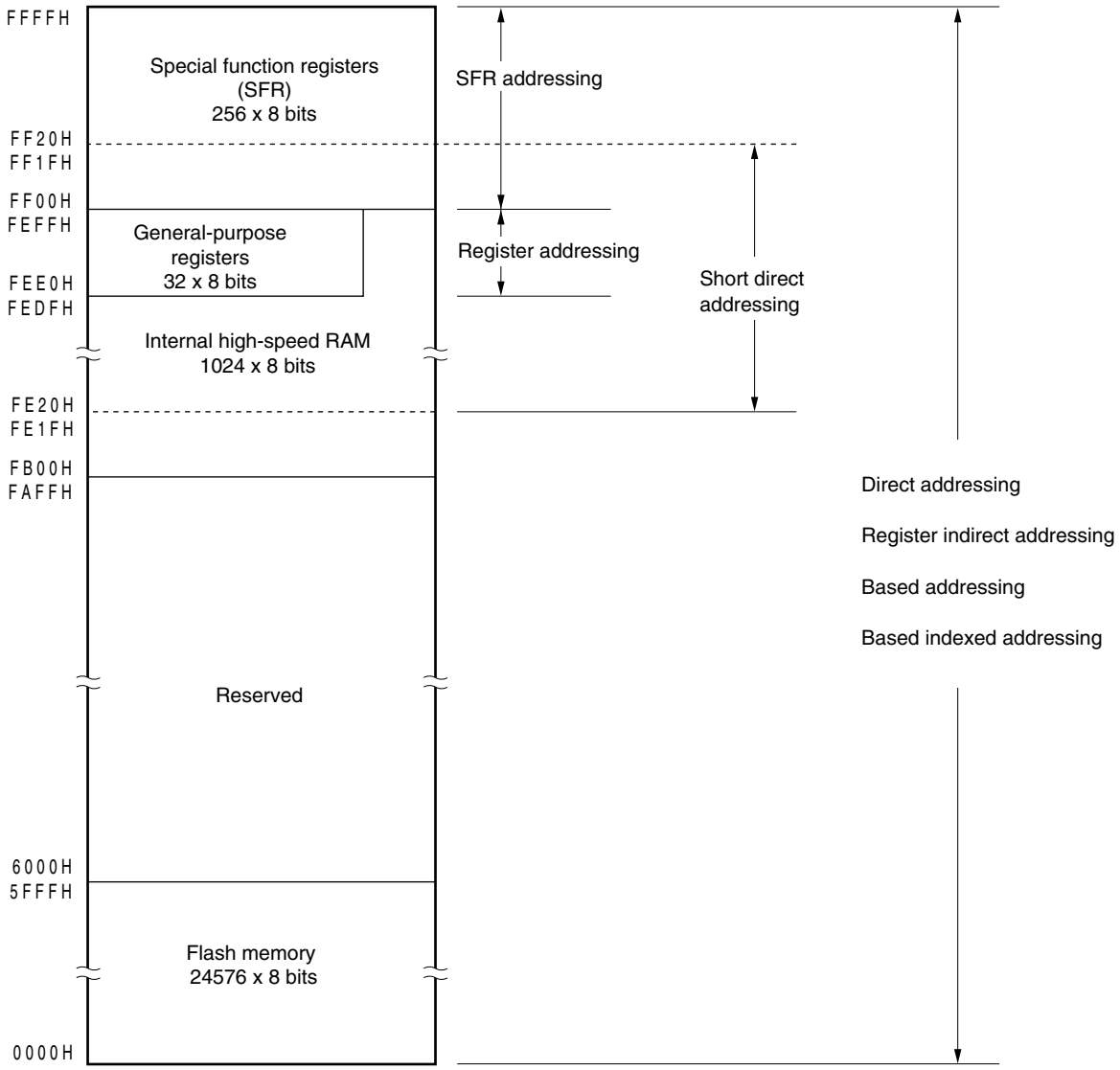

Figure 3-15. Correspondence Between Data Memory and Addressing
(μPD78F0503, 78F0503A, 78F0513, 78F0513A, 78F0523, 78F0523A, 78F0533, 78F0533A, 78F0503D, 78F0503DA, 78F0513D, and 78F0513DA)

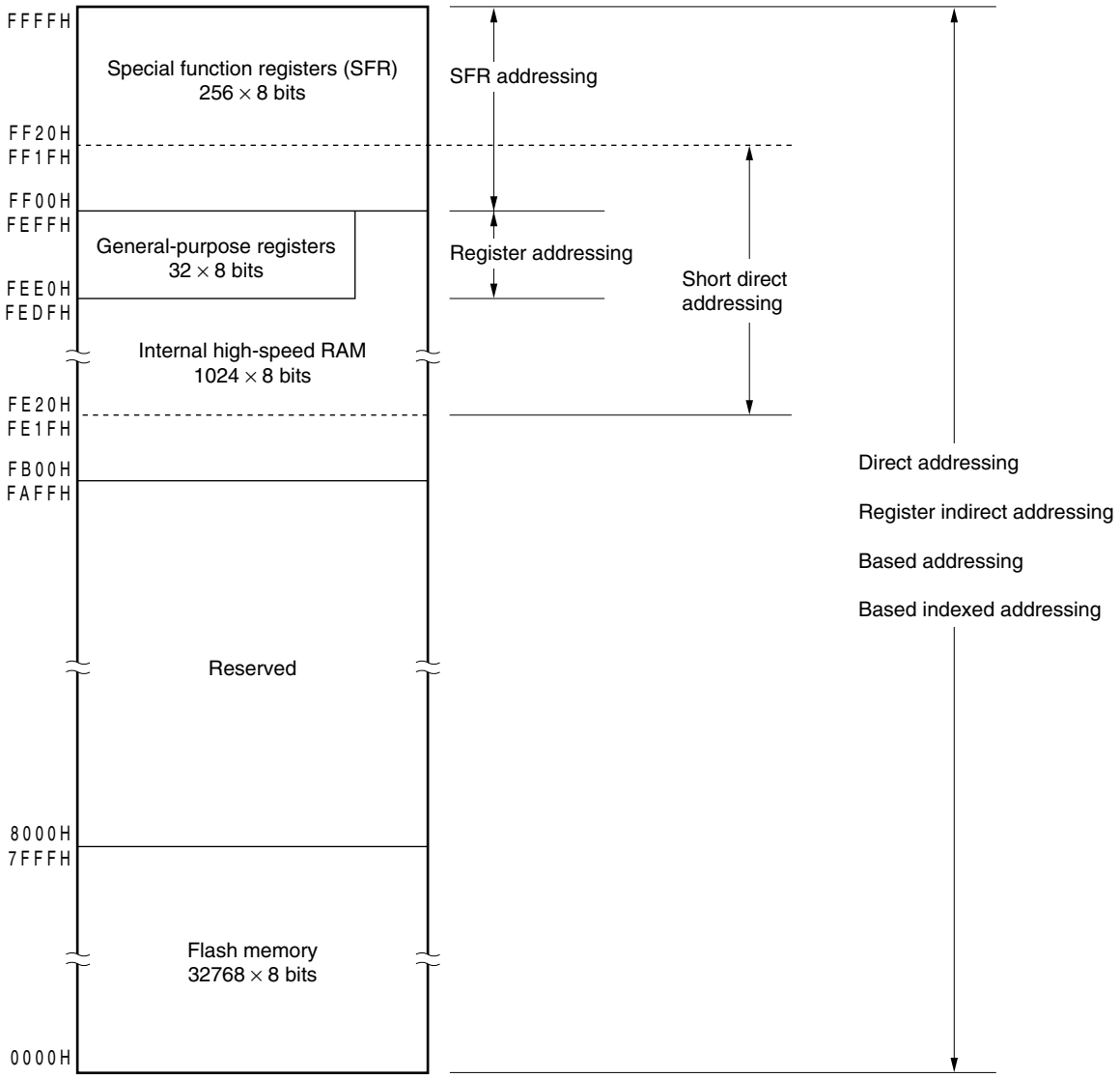

Figure 3-16. Correspondence Between Data Memory and Addressing
(μPD78F0514, 78F0514A, 78F0524, 78F0524A, 78F0534, 78F0534A, 78F0544, and 78F0544A)

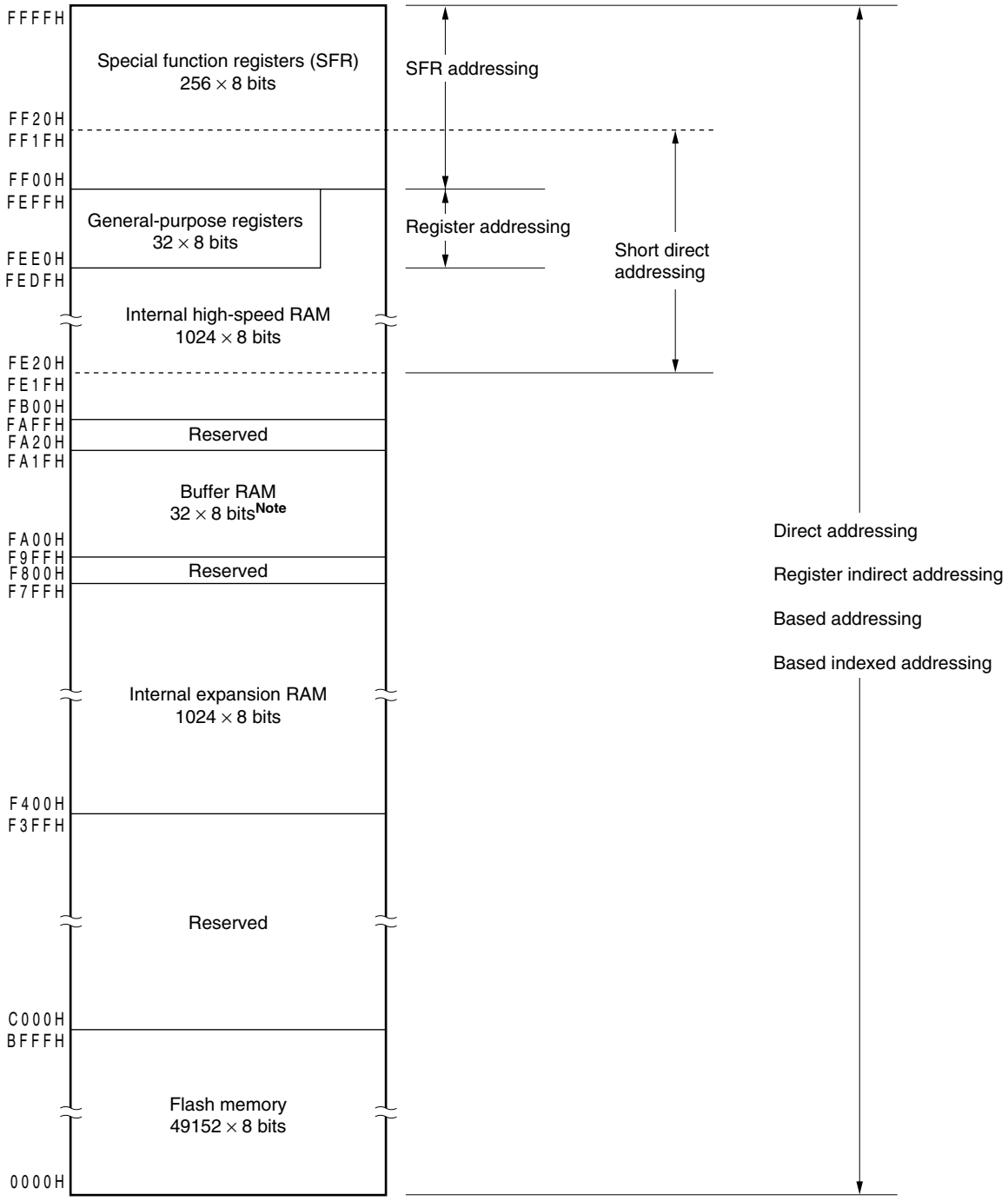

Note The buffer RAM is incorporated only in the μPD78F0544 and 78F0544A (78K0/KF2). The area from FA00H to FA1FH cannot be used with the μPD78F0514, 78F0514A, 78F0524, 78F0524A, 78F0534, and 78F0534A.

Figure 3-17. Correspondence Between Data Memory and Addressing (μPD78F0515, 78F0515A, 78F0525, 78F0525A, 78F0535, 78F0535A, 78F0545, 78F0545A, 78F0515D and 78F0515DA)

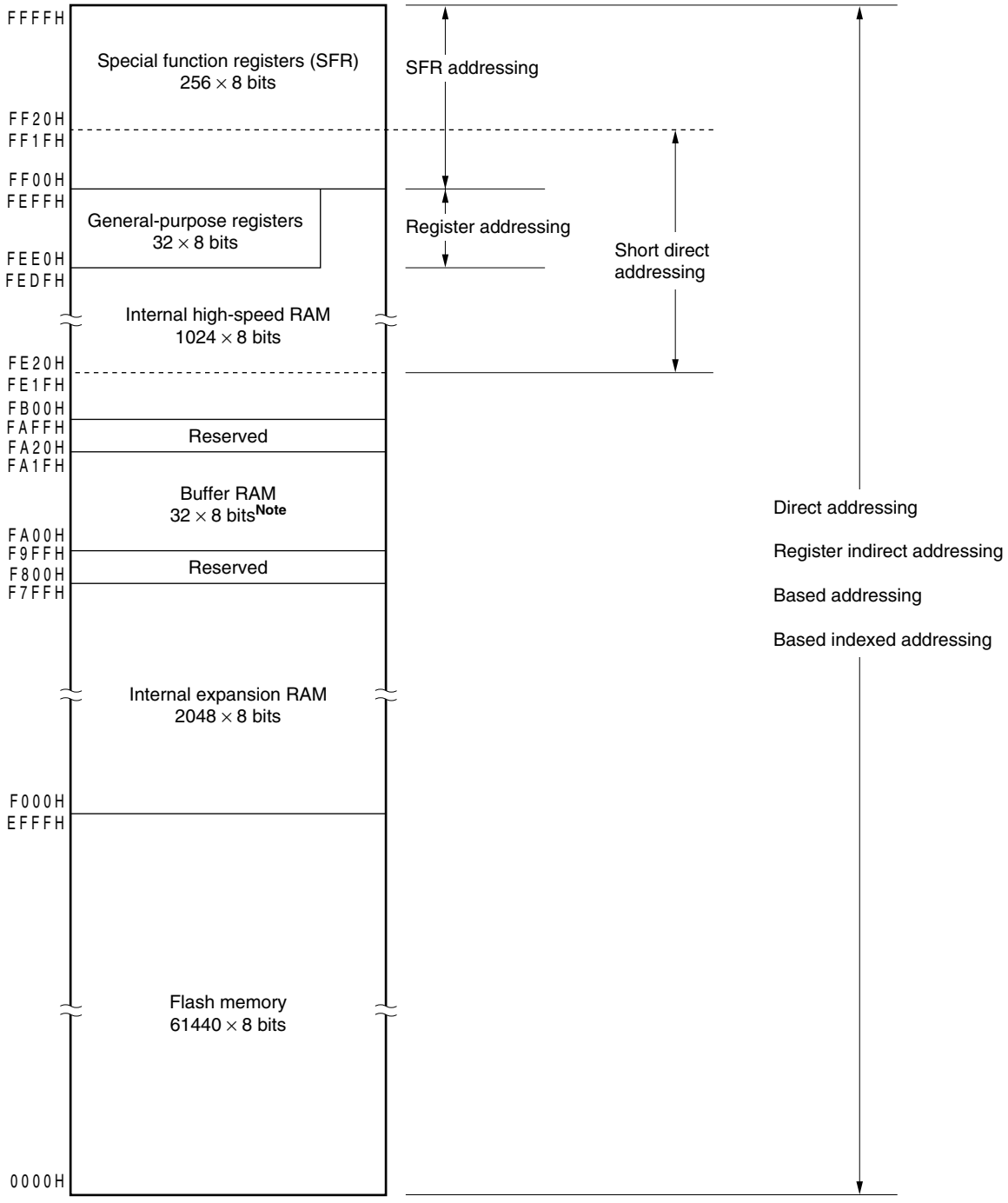

Note The buffer RAM is incorporated only in the μPD78F0545 and 78F0545A (78K0/KF2). The area from FA00H to FA1FH cannot be used with the μPD78F0515, 78F0515A, 78F0525, 78F0525A, 78F0535, 78F0535A, 78F0515D, and 78F0515DA.

Figure 3-18. Correspondence Between Data Memory and Addressing (μPD78F0526, 78F0526A, 78F0536, 78F0536A, 78F0546, and 78F0546A)

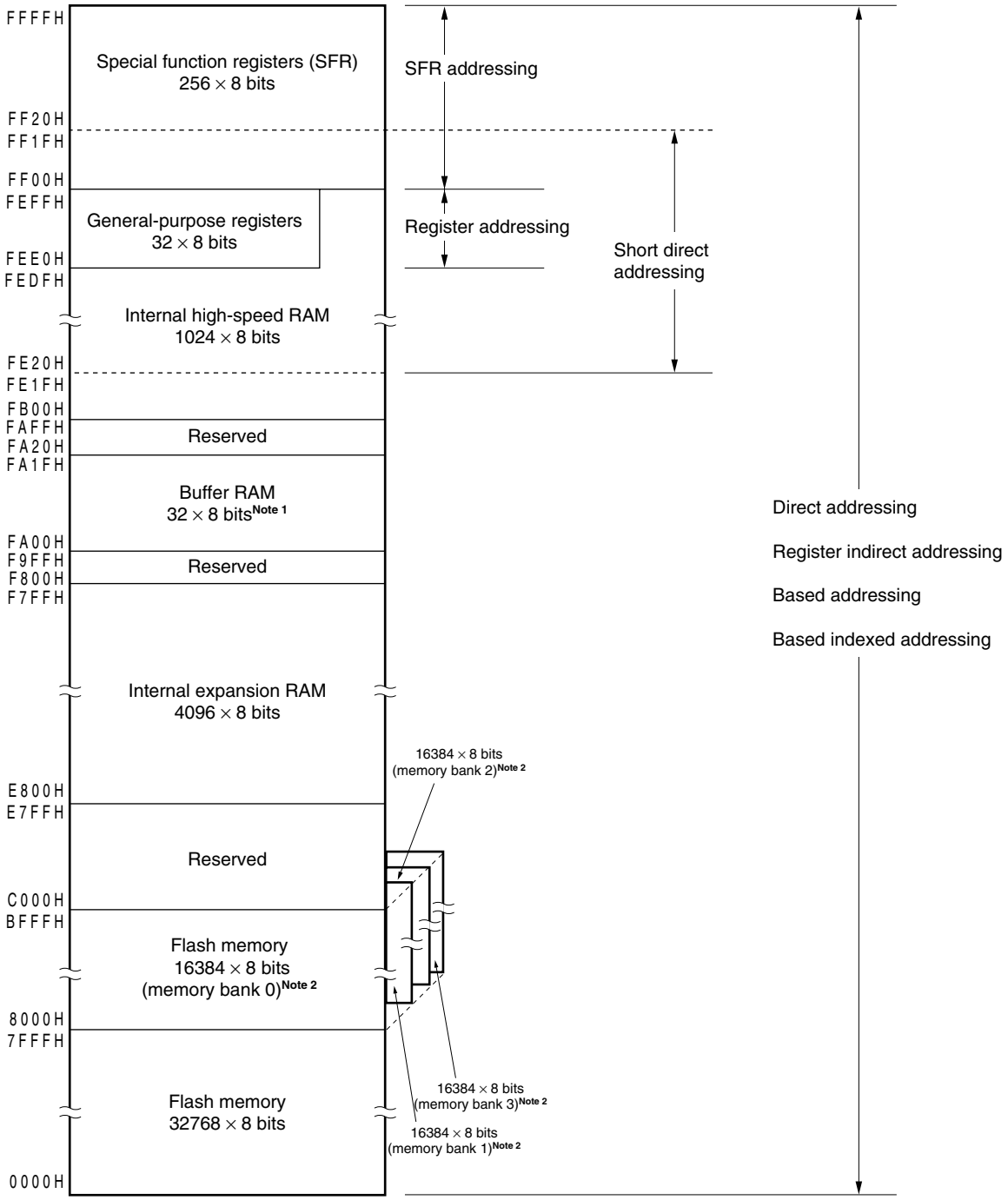

Notes 1. The buffer RAM is incorporated only in the μPD78F0546 and 78F0546A (78K0/KF2). The area from FA00H to FA1FH cannot be used with the μPD78F0526, 78F0526A, 78F0536 and 78F0536A.

2. To branch to or address a memory bank that is not set by the memory bank select register (BANK), change the setting of the memory bank by using BANK.

Figure 3-19. Correspondence Between Data Memory and Addressing
(μPD78F0527, 78F0527A, 78F0537, 78F0537A, 78F0547, 78F0547A, 78F0527D, 78F0527DA, 78F0537D, 78F0537DA, 78F0547D and 78F0547DA)

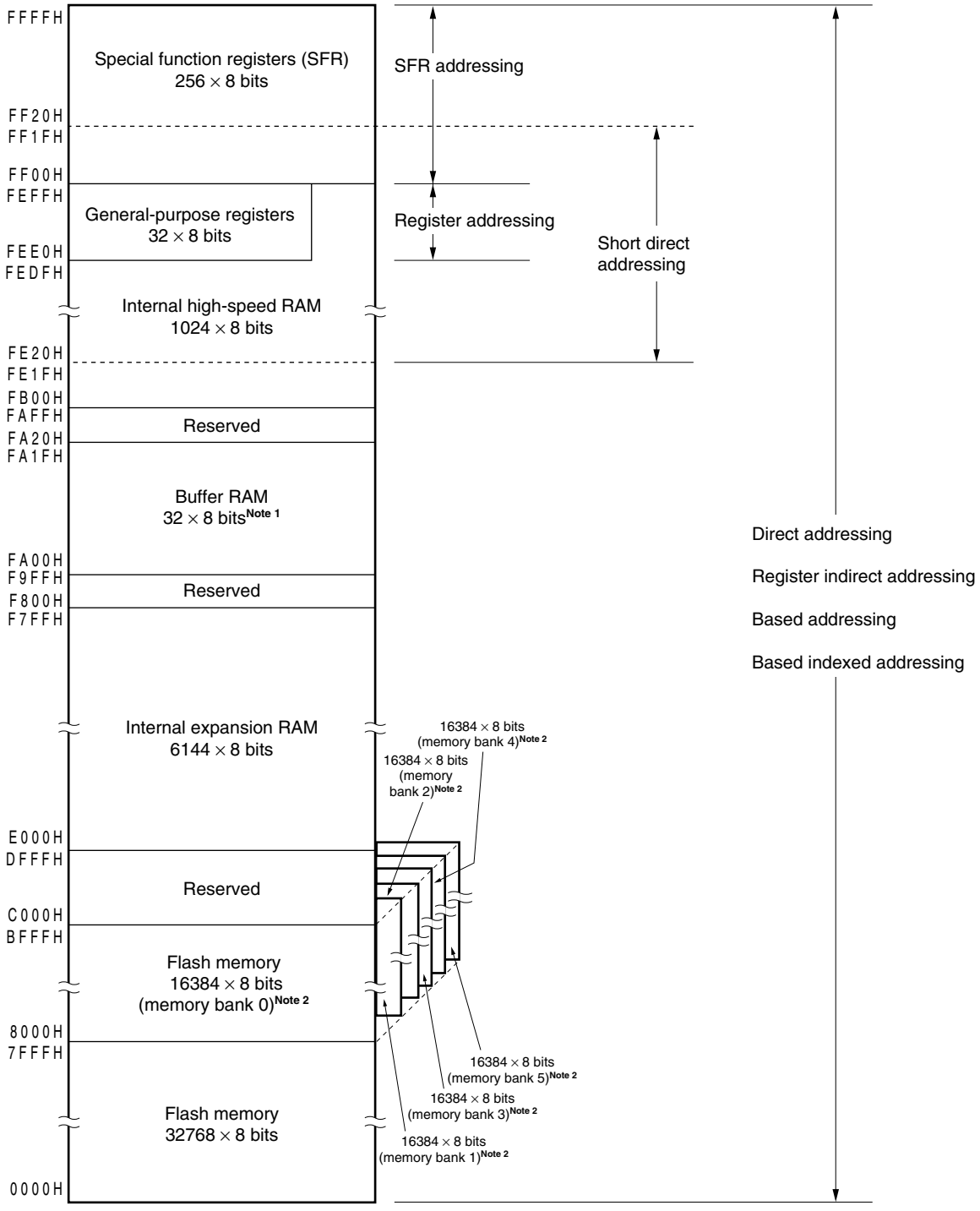

Notes 1. The buffer RAM is incorporated only in the μPD78F0547, 78F0547A, 78F0547D and 78F0547DA (78K0/KF2). The area from FA00H to FA1FH cannot be used with the μPD78F0527, 78F0527A, 78F0537, 78F0537A, 78F0527D, 78F0527DA, 78F0537D and 78F0537DA.

2. To branch to or address a memory bank that is not set by the memory bank select register (BANK), change the setting of the memory bank by using BANK.

3.2 Processor Registers

The 78K0/Kx2 microcontrollers incorporate the following processor registers.

3.2.1 Control registers

The control registers control the program sequence, statuses and stack memory. The control registers consist of a program counter (PC), a program status word (PSW) and a stack pointer (SP).

(1) Program counter (PC)

The program counter is a 16-bit register that holds the address information of the next program to be executed.

In normal operation, PC is automatically incremented according to the number of bytes of the instruction to be fetched.

When a branch instruction is executed, immediate data and register contents are set.

Reset signal generation sets the reset vector table values at addresses 0000H and 0001H to the program counter.

Figure 3-20. Format of Program Counter

	15															0
PC	PC15	PC14	PC13	PC12	PC11	PC10	PC9	PC8	PC7	PC6	PC5	PC4	PC3	PC2	PC1	PC0

(2) Program status word (PSW)

The program status word is an 8-bit register consisting of various flags set/reset by instruction execution.

Program status word contents are stored in the stack area upon vectored interrupt request acknowledgement or PUSH PSW instruction execution and are restored upon execution of the RETB, RETI and POP PSW instructions.

Reset signal generation sets PSW to 02H.

Figure 3-21. Format of Program Status Word

	7							0
PSW	IE	Z	RBS1	AC	RBS0	0	ISP	CY

(a) Interrupt enable flag (IE)

This flag controls the interrupt request acknowledge operations of the CPU.

When 0, the IE flag is set to the interrupt disabled (DI) state, and all maskable interrupt requests are disabled.

When 1, the IE flag is set to the interrupt enabled (EI) state and interrupt request acknowledgment is controlled with an in-service priority flag (ISP), an interrupt mask flag for various interrupt sources, and a priority specification flag.

The IE flag is reset (0) upon DI instruction execution or interrupt acknowledgment and is set (1) upon EI instruction execution.

(b) Zero flag (Z)

When the operation result is zero, this flag is set (1). It is reset (0) in all other cases.

(c) Register bank select flags (RBS0 and RBS1)

These are 2-bit flags to select one of the four register banks.

In these flags, the 2-bit information that indicates the register bank selected by SEL RBn instruction execution is stored.

(d) Auxiliary carry flag (AC)

If the operation result has a carry from bit 3 or a borrow at bit 3, this flag is set (1). It is reset (0) in all other cases.

(e) In-service priority flag (ISP)

This flag manages the priority of acknowledgeable maskable vectored interrupts. When this flag is 0, low-level vectored interrupt requests specified by a priority specification flag register (PR0L, PR0H, PR1L, PR1H) (see **20.3 (3) Priority specification flag registers (PR0L, PR0H, PR1L, PR1H)**) can not be acknowledged. Actual request acknowledgment is controlled by the interrupt enable flag (IE).

(f) Carry flag (CY)

This flag stores overflow and underflow upon add/subtract instruction execution. It stores the shift-out value upon rotate instruction execution and functions as a bit accumulator during bit operation instruction execution.

(3) Stack pointer (SP)

This is a 16-bit register to hold the start address of the memory stack area. Only the internal high-speed RAM area can be set as the stack area.

Figure 3-22. Format of Stack Pointer

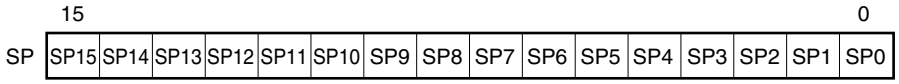

The SP is decremented ahead of write (save) to the stack memory and is incremented after read (restored) from the stack memory.

Each stack operation saves/restores data as shown in Figures 3-23 and 3-24.

Caution Since reset signal generation makes the SP contents undefined, be sure to initialize the SP before using the stack.

Figure 3-23. Data to Be Saved to Stack Memory

(a) PUSH rp instruction (when SP = FEE0H)

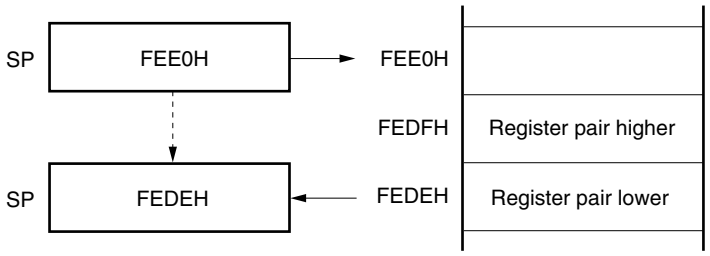

(b) CALL, CALLF, CALLT instructions (when SP = FEE0H)

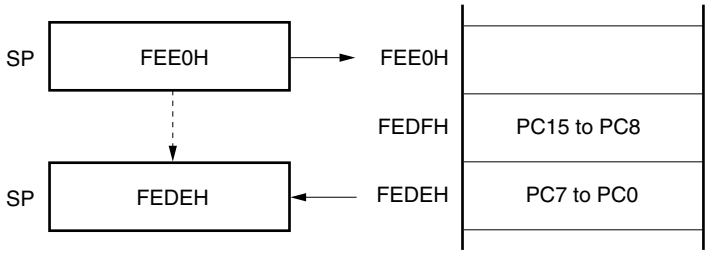

(c) Interrupt, BRK instructions (when SP = FEE0H)

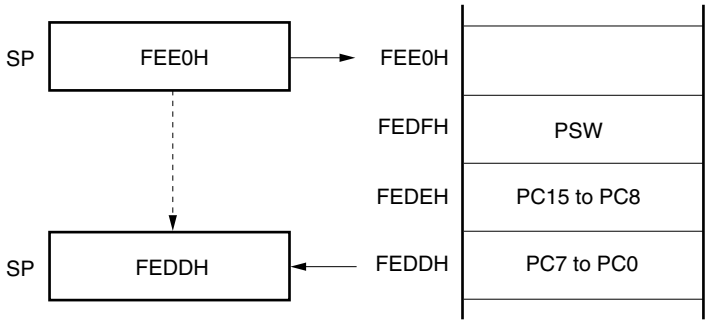

Figure 3-24. Data to Be Restored from Stack Memory

(a) POP rp instruction (when SP = FEDEH)

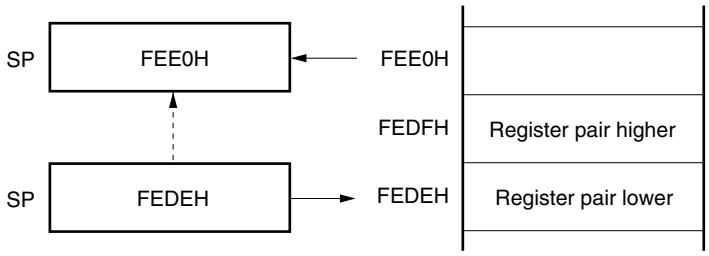

(b) RET instruction (when SP = FEDEH)

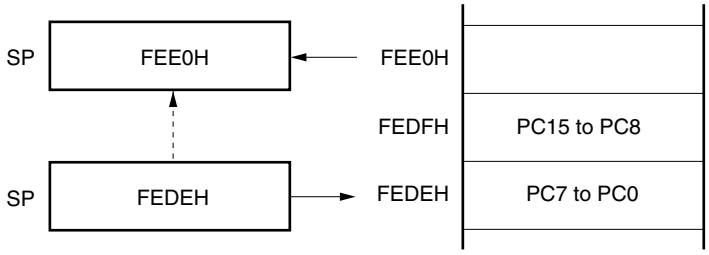

(c) RETI, RETB instructions (when SP = FEDDH)

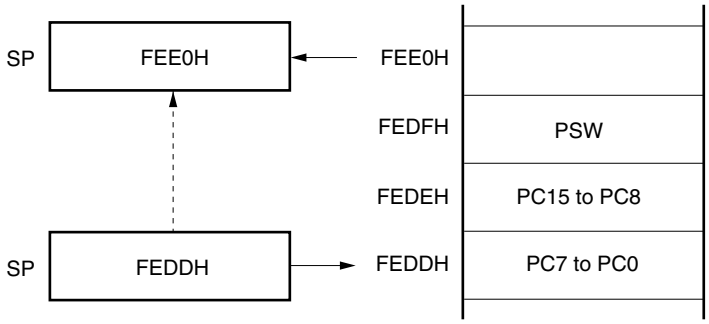

3.2.2 General-purpose registers

General-purpose registers are mapped at particular addresses (FEE0H to FEFFH) of the data memory. The general-purpose registers consists of 4 banks, each bank consisting of eight 8-bit registers (X, A, C, B, E, D, L, and H).

Each register can be used as an 8-bit register, and two 8-bit registers can also be used in a pair as a 16-bit register (AX, BC, DE, and HL).

These registers can be described in terms of function names (X, A, C, B, E, D, L, H, AX, BC, DE, and HL) and absolute names (R0 to R7 and RP0 to RP3).

Register banks to be used for instruction execution are set by the CPU control instruction (SEL RBn). Because of the 4-register bank configuration, an efficient program can be created by switching between a register for normal processing and a register for interrupts for each bank.

Figure 3-25. Configuration of General-Purpose Registers

(a) Function name

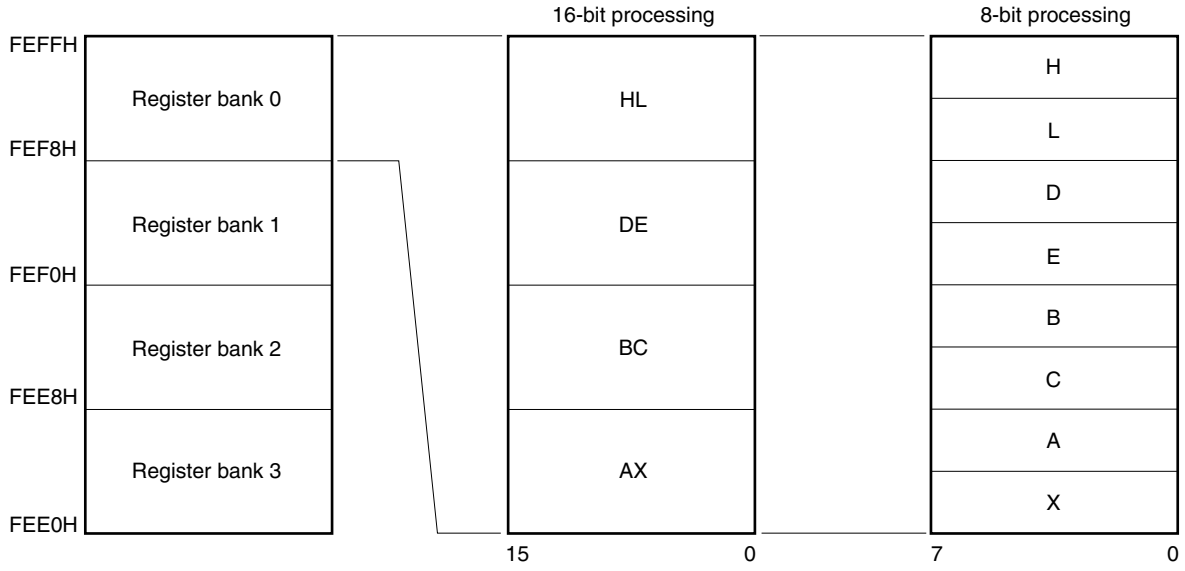

(b) Absolute name

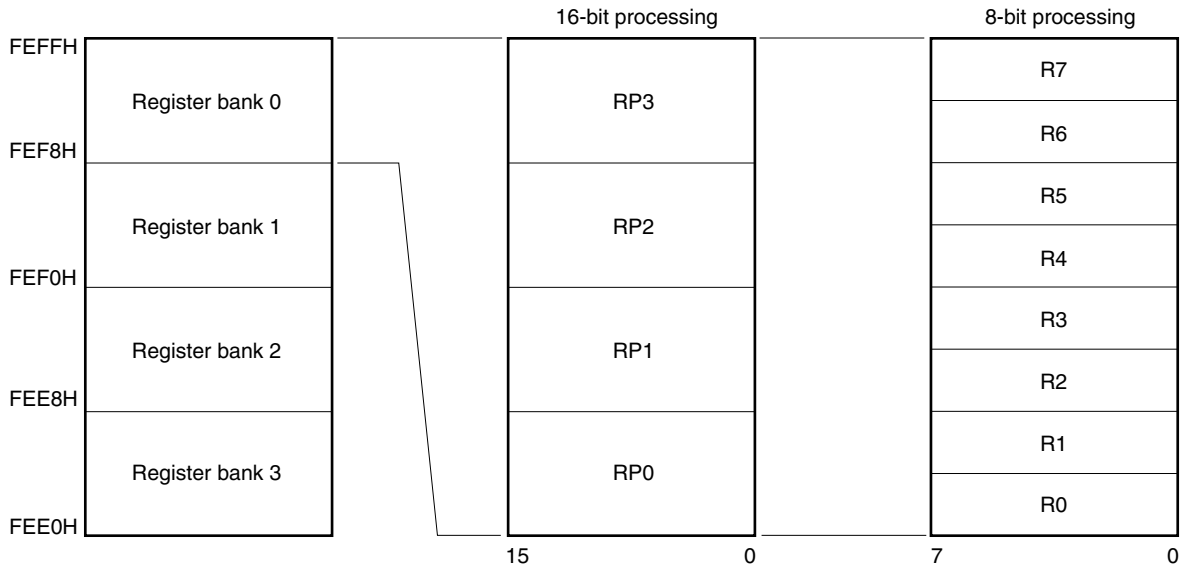

3.2.3 Special function registers (SFRs)

Unlike a general-purpose register, each special function register has a special function.

SFRs are allocated to the FF00H to FFFFH area.

Special function registers can be manipulated like general-purpose registers, using operation, transfer, and bit manipulation instructions. The manipulatable bit units, 1, 8, and 16, depend on the special function register type.

Each manipulation bit unit can be specified as follows.

- 1-bit manipulation
  Describe the symbol reserved by the assembler for the 1-bit manipulation instruction operand (sfr.bit).
  This manipulation can also be specified with an address.
- 8-bit manipulation
  Describe the symbol reserved by the assembler for the 8-bit manipulation instruction operand (sfr).
  This manipulation can also be specified with an address.
- 16-bit manipulation
  Describe the symbol reserved by the assembler for the 16-bit manipulation instruction operand (sfrp).
  When specifying an address, describe an even address.

Table 3-8 gives a list of the special function registers. The meanings of items in the table are as follows.

- Symbol
  Symbol indicating the address of a special function register. It is a reserved word in the RA78K0, and is defined as an sfr variable using the #pragma sfr directive in the CC78K0. When using the RA78K0, ID78K0-QB, SM+ for 78K0, and SM+ for 78K0/KX2, symbols can be written as an instruction operand.
- R/W
  Indicates whether the corresponding special function register can be read or written.
  R/W: Read/write enable
  R: Read only
  W: Write only
- Manipulatable bit units
  Indicates the manipulatable bit unit (1, 8, or 16). "–" indicates a bit unit for which manipulation is not possible.
- After reset
  Indicates each register status upon reset signal generation.

Table 3-8. Special Function Register List (1/5)

Address	Special Function Register (SFR) Name	Symbol	R/W	Manipulatable Bit Unit			After Reset	KB2	KC2	KD2	KE2	KF2
				1 Bit	8 Bits	16 Bits						
FF00H	Port register 0	P0	R/W	√	√	–	00H	√	√	√	√	√
FF01H	Port register 1	P1	R/W	√	√	–	00H	√	√	√	√	√
FF02H	Port register 2	P2	R/W	√	√	–	00H	√	√	√	√	√
FF03H	Port register 3	P3	R/W	√	√	–	00H	√	√	√	√	√
FF04H	Port register 4	P4	R/W	√	√	–	00H	–	√	√	√	√
FF05H	Port register 5	P5	R/W	√	√	–	00H	–	–	–	√	√
FF06H	Port register 6	P6	R/W	√	√	–	00H	√	√	√	√	√
FF07H	Port register 7	P7	R/W	√	√	–	00H	–	√	√	√	√
FF08H	10-bit A/D conversion result register	ADCR	R	–	–	√	0000H	√	√	√	√	√
FF09H	8-bit A/D conversion result register	ADCRH	R	–	√	–	00H	√	√	√	√	√
FF0AH	Receive buffer register 6	RXB6	R	–	√	–	FFH	√	√	√	√	√
FF0BH	Transmit buffer register 6	TXB6	R/W	–	√	–	FFH	√	√	√	√	√
FF0CH	Port register 12	P12	R/W	√	√	–	00H	√	√	√	√	√
FF0DH	Port register 13	P13	R/W	√	√	–	00H	–	**Note**	√	√	√
FF0EH	Port register 14	P14	R/W	√	√	–	00H	–	**Note**	√	√	√
FF0FH	Serial I/O shift register 10	SIO10	R	–	√	–	00H	√	√	√	√	√
FF10H FF11H	16-bit timer counter 00	TM00	R	–	–	√	0000H	√	√	√	√	√
FF12H FF13H	16-bit timer capture/compare register 000	CR000	R/W	–	–	√	0000H	√	√	√	√	√
FF14H FF15H	16-bit timer capture/compare register 010	CR010	R/W	–	–	√	0000H	√	√	√	√	√
FF16H	8-bit timer counter 50	TM50	R	–	√	–	00H	√	√	√	√	√
FF17H	8-bit timer compare register 50	CR50	R/W	–	√	–	00H	√	√	√	√	√
FF18H	8-bit timer H compare register 00	CMP00	R/W	–	√	–	00H	√	√	√	√	√
FF19H	8-bit timer H compare register 10	CMP10	R/W	–	√	–	00H	√	√	√	√	√
FF1AH	8-bit timer H compare register 01	CMP01	R/W	–	√	–	00H	√	√	√	√	√
FF1BH	8-bit timer H compare register 11	CMP11	R/W	–	√	–	00H	√	√	√	√	√
FF1FH	8-bit timer counter 51	TM51	R	–	√	–	00H	√	√	√	√	√
FF20H	Port mode register 0	PM0	R/W	√	√	–	FFH	√	√	√	√	√
FF21H	Port mode register 1	PM1	R/W	√	√	–	FFH	√	√	√	√	√
FF22H	Port mode register 2	PM2	R/W	√	√	–	FFH	√	√	√	√	√
FF23H	Port mode register 3	PM3	R/W	√	√	–	FFH	√	√	√	√	√
FF24H	Port mode register 4	PM4	R/W	√	√	–	FFH	–	√	√	√	√
FF25H	Port mode register 5	PM5	R/W	√	√	–	FFH	–	–	–	√	√
FF26H	Port mode register 6	PM6	R/W	√	√	–	FFH	√	√	√	√	√
FF27H	Port mode register 7	PM7	R/W	√	√	–	FFH	–	√	√	√	√
FF28H	A/D converter mode register	ADM	R/W	√	√	–	00H	√	√	√	√	√
FF29H	Analog input channel specification register	ADS	R/W	√	√	–	00H	√	√	√	√	√
FF2CH	Port mode register 12	PM12	R/W	√	√	–	FFH	√	√	√	√	√
FF2EH	Port mode register 14	PM14	R/W	√	√	–	FFH	–	**Note**	√	√	√
FF2FH	A/D port configuration register	ADPC	R/W	√	√	–	00H	√	√	√	√	√

Note This register is incorporated only in 48-pin products.

Table 3-8. Special Function Register List (2/5)

Address	Special Function Register (SFR) Name	Symbol		R/W	Manipulatable Bit Unit			After Reset	KB2	KC2	KD2	KE2	KF2
					1 Bit	8 Bits	16 Bits						
FF30H	Pull-up resistor option register 0	PU0		R/W	√	√	–	00H	√	√	√	√	√
FF31H	Pull-up resistor option register 1	PU1		R/W	√	√	–	00H	√	√	√	√	√
FF33H	Pull-up resistor option register 3	PU3		R/W	√	√	–	00H	√	√	√	√	√
FF34H	Pull-up resistor option register 4	PU4		R/W	√	√	–	00H	–	√	√	√	√
FF35H	Pull-up resistor option register 5	PU5		R/W	√	√	–	00H	–	–	–	√	√
FF36H	Pull-up resistor option register 6	PU6		R/W	√	√	–	00H	–	–	–	–	√
FF37H	Pull-up resistor option register 7	PU7		R/W	√	√	–	00H	–	√	√	√	√
FF3CH	Pull-up resistor option register 12	PU12		R/W	√	√	–	00H	√	√	√	√	√
FF3EH	Pull-up resistor option register 14	PU14		R/W	√	√	–	00H	–	Note 1	√	√	√
FF40H	Clock output selection register	CKS		R/W	√	√	–	00H	–	Note 1	√	√	√
FF41H	8-bit timer compare register 51	CR51		R/W	–	√	–	00H	√	√	√	√	√
FF43H	8-bit timer mode control register 51	TMC51		R/W	√	√	–	00H	√	√	√	√	√
FF48H	External interrupt rising edge enable register	EGP		R/W	√	√	–	00H	√	√	√	√	√
FF49H	External interrupt falling edge enable register	EGN		R/W	√	√	–	00H	√	√	√	√	√
FF4AH	Serial I/O shift register 11	SIO11		R	–	√	–	00H	–	–	–	Note 2	√
FF4CH	Transmit buffer register 11	SOTB11		R/W	–	√	–	00H	–	–	–	Note 2	√
FF4FH	Input switch control register	ISC		R/W	√	√	–	00H	√	√	√	√	√
FF50H	Asynchronous serial interface operation mode register 6	ASIM6		R/W	√	√	–	01H	√	√	√	√	√
FF53H	Asynchronous serial interface reception error status register 6	ASIS6		R	–	√	–	00H	√	√	√	√	√
FF55H	Asynchronous serial interface transmission status register 6	ASIF6		R	–	√	–	00H	√	√	√	√	√
FF56H	Clock selection register 6	CKSR6		R/W	–	√	–	00H	√	√	√	√	√
FF57H	Baud rate generator control register 6	BRGC6		R/W	–	√	–	FFH	√	√	√	√	√
FF58H	Asynchronous serial interface control register 6	ASICL6		R/W	√	√	–	16H	√	√	√	√	√
FF60H	Remainder data register 0	SDR0	SDR0L	R	–	√	√	00H	–	Note 2	Note 2	Note 2	√
FF61H			SDR0H		–	√		00H	–	Note 2	Note 2	Note 2	√
FF62H	Multiplication/division data register A0	MDA0L	MDA0LL	R/W	–	√	√	00H	–	Note 2	Note 2	Note 2	√
FF63H			MDA0LH		–	√		00H	–	Note 2	Note 2	Note 2	√
FF64H		MDA0H	MDA0HL	R/W	–	√	√	00H	–	Note 2	Note 2	Note 2	√
FF65H			MDA0HH		–	√		00H	–	Note 2	Note 2	Note 2	√
FF66H	Multiplication/division data register B0	MDB0	MDB0L	R/W	–	√	√	00H	–	Note 2	Note 2	Note 2	√
FF67H			MDB0H		–	√		00H	–	Note 2	Note 2	Note 2	√
FF68H	Multiplier/divider control register 0	DMUC0		R/W	√	√	–	00H	–	Note 2	Note 2	Note 2	√
FF69H	8-bit timer H mode register 0	TMHMD0		R/W	√	√	–	00H	√	√	√	√	√

Notes 1. This register is incorporated only in 48-pin products.

2. This register is incorporated only in products whose flash memory is at least 48 KB.

Table 3-8. Special Function Register List (3/5)

Address	Special Function Register (SFR) Name	Symbol	R/W	Manipulatable Bit Unit			After Reset	KB2	KC2	KD2	KE2	KF2
				1 Bit	8 Bits	16 Bits						
FF6AH	Timer clock selection register 50	TCL50	R/W	√	√	–	00H	√	√	√	√	√
FF6BH	8-bit timer mode control register 50	TMC50	R/W	√	√	–	00H	√	√	√	√	√
FF6CH	8-bit timer H mode register 1	TMHMD1	R/W	√	√	–	00H	√	√	√	√	√
FF6DH	8-bit timer H carrier control register 1	TMCYC1	R/W	√	√	–	00H	√	√	√	√	√
FF6EH	Key return mode register	KRM	R/W	√	√	–	00H	–	√	√	√	√
FF6FH	Watch timer operation mode register	WTM	R/W	√	√	–	00H	–	√	√	√	√
FF70H	Asynchronous serial interface operation mode register 0	ASIM0	R/W	√	√	–	01H	√	√	√	√	√
FF71H	Baud rate generator control register 0	BRGC0	R/W	–	√	–	1FH	√	√	√	√	√
FF72H	Receive buffer register 0	RXB0	R	–	√	–	FFH	√	√	√	√	√
FF73H	Asynchronous serial interface reception error status register 0	ASIS0	R	–	√	–	00H	√	√	√	√	√
FF74H	Transmit shift register 0	TXS0	W	–	√	–	FFH	√	√	√	√	√
FF80H	Serial operation mode register 10	CSIM10	R/W	√	√	–	00H	√	√	√	√	√
FF81H	Serial clock selection register 10	CSIC10	R/W	√	√	–	00H	√	√	√	√	√
FF84H	Transmit buffer register 10	SOTB10	R/W	–	√	–	00H	√	√	√	√	√
FF88H	Serial operation mode register 11	CSIM11	R/W	√	√	–	00H	–	–	–	Note 1	√
FF89H	Serial clock selection register 11	CSIC11	R/W	√	√	–	00H	–	–	–	Note 1	√
FF8CH	Timer clock selection register 51	TCL51	R/W	√	√	–	00H	√	√	√	√	√
FF90H	Serial operation mode specification register 0	CSIMA0	R/W	√	√	–	00H	–	–	–	–	√
FF91H	Serial status register 0	CSIS0	R/W	√	√	–	00H	–	–	–	–	√
FF92H	Serial trigger register 0	CSIT0	R/W	√	√	–	00H	–	–	–	–	√
FF93H	Division value selection register 0	BRGCA0	R/W	–	√	–	03H	–	–	–	–	√
FF94H	Automatic data transfer address point specification register 0	ADTP0	R/W	–	√	–	00H	–	–	–	–	√
FF95H	Automatic data transfer interval specification register 0	ADTI0	R/W	–	√	–	00H	–	–	–	–	√
FF96H	Serial I/O shift register 0	SIOA0	R/W	–	√	–	00H	–	–	–	–	√
FF97H	Automatic data transfer address count register 0	ADTC0	R	–	√	–	00H	–	–	–	–	√
FF99H	Watchdog timer enable register	WDTE	R/W	–	√	–	1AH/ 9AH Note 2	√	√	√	√	√
FF9FH	Clock operation mode select register	OSCCTL	R/W	√	√	–	00H	√	√	√	√	√
FFA0H	Internal oscillation mode register	RCM	R/W	√	√	–	80H Note 3	√	√	√	√	√
FFA1H	Main clock mode register	MCM	R/W	√	√	–	00H	√	√	√	√	√
FFA2H	Main OSC control register	MOC	R/W	√	√	–	80H	√	√	√	√	√
FFA3H	Oscillation stabilization time counter status register	OSTC	R	√	√	–	00H	√	√	√	√	√
FFA4H	Oscillation stabilization time select register	OSTS	R/W	–	√	–	05H	√	√	√	√	√

Notes 1. This register is incorporated only in products whose flash memory is at least 48 KB.

2. The reset value of WDTE is determined by setting of option byte.

3 The value of this register is 00H immediately after a reset release but automatically changes to 80H after oscillation accuracy stabilization of high-speed internal oscillator has been waited.

Table 3-8. Special Function Register List (4/5)

Address	Special Function Register (SFR) Name	Symbol		R/W	Manipulatable Bit Unit			After Reset	KB2	KC2	KD2	KE2	KF2
					1 Bit	8 Bits	16 Bits						
FFA5H	IIC shift register 0	IIC0		R/W	–	√	–	00H	√	√	√	√	√
FFA6H	IIC control register 0	IICC0		R/W	√	√	–	00H	√	√	√	√	√
FFA7H	Slave address register 0	SVA0		R/W	–	√	–	00H	√	√	√	√	√
FFA8H	IIC clock selection register 0	IICCL0		R/W	√	√	–	00H	√	√	√	√	√
FFA9H	IIC function expansion register 0	IICX0		R/W	√	√	–	00H	√	√	√	√	√
FFAAH	IIC status register 0	IICS0		R	√	√	–	00H	√	√	√	√	√
FFABH	IIC flag register 0	IICF0		R/W	√	√	–	00H	√	√	√	√	√
FFACH	Reset control flag register	RESF		R	–	√	–	00H Note 1	√	√	√	√	√
FFB0H FFB1H	16-bit timer counter 01	TM01		R	–	–	√	0000H	–	–	–	Note 2	√
FFB2H FFB3H	16-bit timer capture/compare register 001	CR001		R/W	–	–	√	0000H	–	–	–	Note 2	√
FFB4H FFB5H	16-bit timer capture/compare register 011	CR011		R/W	–	–	√	0000H	–	–	–	Note 2	√
FFB6H	16-bit timer mode control register 01	TMC01		R/W	√	√	–	00H	–	–	–	Note 2	√
FFB7H	Prescaler mode register 01	PRM01		R/W	√	√	–	00H	–	–	–	Note 2	√
FFB8H	Capture/compare control register 01	CRC01		R/W	√	√	–	00H	–	–	–	Note 2	√
FFB9H	16-bit timer output control register 01	TOC01		R/W	√	√	–	00H	–	–	–	Note 2	√
FFBAH	16-bit timer mode control register 00	TMC00		R/W	√	√	–	00H	√	√	√	√	√
FFBBH	Prescaler mode register 00	PRM00		R/W	√	√	–	00H	√	√	√	√	√
FFBCH	Capture/compare control register 00	CRC00		R/W	√	√	–	00H	√	√	√	√	√
FFBDH	16-bit timer output control register 00	TOC00		R/W	√	√	–	00H	√	√	√	√	√
FFBEH	Low-voltage detection register	LVIM		R/W	√	√	–	00H Note 3	√	√	√	√	√
FFBFH	Low-voltage detection level selection register	LVIS		R/W	√	√	–	00H Note 3	√	√	√	√	√
FFE0H	Interrupt request flag register 0L	IF0	IF0L	R/W	√	√	√	00H	√	√	√	√	√
FFE1H	Interrupt request flag register 0H		IF0H	R/W	√	√		00H	√	√	√	√	√
FFE2H	Interrupt request flag register 1L	IF1	IF1L	R/W	√	√	√	00H	√	√	√	√	√
FFE3H	Interrupt request flag register 1H		IF1H	R/W	√	√		00H	√	√	√	√	√
FFE4H	Interrupt mask flag register 0L	MK0	MK0L	R/W	√	√	√	FFH	√	√	√	√	√
FFE5H	Interrupt mask flag register 0H		MK0H	R/W	√	√		FFH	√	√	√	√	√
FFE6H	Interrupt mask flag register 1L	MK1	MK1L	R/W	√	√	√	FFH	√	√	√	√	√
FFE7H	Interrupt mask flag register 1H		MK1H	R/W	√	√		FFH	√	√	√	√	√

Notes 1. The reset value of RESF varies depending on the reset source.

2. This register is incorporated only in products whose flash memory is at least 48 KB.

3. The reset values of LVIM and LVIS vary depending on the reset source.

Table 3-8. Special Function Register List (5/5)

Address	Special Function Register (SFR) Name	Symbol		R/W	Manipulatable Bit Unit			After Reset	KB2	KC2	KD2	KE2	KF2
					1 Bit	8 Bits	16 Bits						
FFE8H	Priority specification flag register 0L	PR0	PR0L	R/W	√	√	√	FFH	√	√	√	√	√
FFE9H	Priority specification flag register 0H		PR0H	R/W	√	√		FFH	√	√	√	√	√
FFEAH	Priority specification flag register 1L	PR1	PR1L	R/W	√	√	√	FFH	√	√	√	√	√
FFEBH	Priority specification flag register 1H		PR1H	R/W	√	√		FFH	√	√	√	√	√
FFF0H	Internal memory size switching register[Notes 3,4]	IMS		R/W	–	√	–	CFH	√	√	√	√	√
FFF3H	Memory bank select register	BANK		R/W	–	√	–	00H	–	–	Note 1	Note 1	Note 1
FFF4H	Internal expansion RAM size switching register[Notes 3,4]	IXS		R/W	–	√	–	0CH	Note 2	Note 2	Note 2	Note 2	√
FFFBH	Processor clock control register	PCC		R/W	√	√	–	01H	√	√	√	√	√

Notes 1. This register is incorporated only in products whose flash memory is at least 96 KB.

2. Set this register only in products with internal expansion RAM.

3. Regardless of the internal memory capacity, the initial values of the internal memory size switching register (IMS) and internal expansion RAM size switching register (IXS) of all products in the 78K0/Kx2 microcontrollers are fixed (IMS = CFH, IXS = 0CH). Therefore, set the value corresponding to each product as indicated in Tables 3-1 and 3-2.

4. The ROM and RAM capacities of the products with the on-chip debug function can be debugged by setting IMS and IXS, according to the debug target products. Set IMS and IXS according to the debug target products.

3.3 Instruction Address Addressing

An instruction address is determined by contents of the program counter (PC) and memory bank select register (BANK), and is normally incremented (+1 for each byte) automatically according to the number of bytes of an instruction to be fetched each time another instruction is executed. When a branch instruction is executed, the branch destination information is set to PC and branched by the following addressing (for details of instructions, refer to the **78K/0 Series Instructions User's Manual (U12326E)**).

3.3.1 Relative addressing

[Function]

The value obtained by adding 8-bit immediate data (displacement value: jdisp8) of an instruction code to the start address of the following instruction is transferred to the program counter (PC) and branched. The displacement value is treated as signed two's complement data (−128 to +127) and bit 7 becomes a sign bit.

In other words, relative addressing consists of relative branching from the start address of the following instruction to the −128 to +127 range.

This function is carried out when the BR $addr16 instruction or a conditional branch instruction is executed.

[Illustration]

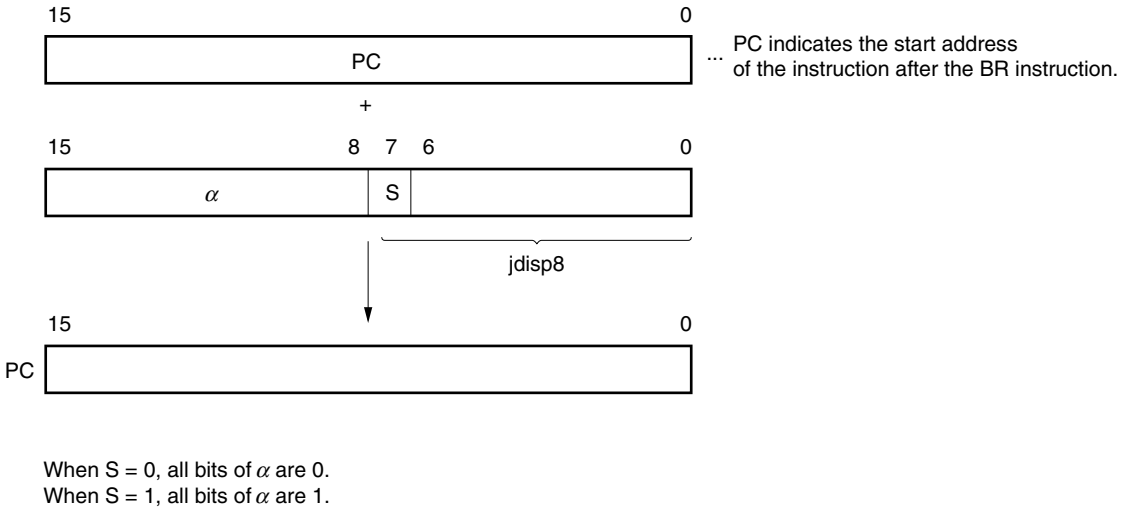

When S = 0, all bits of α are 0.
When S = 1, all bits of α are 1.

3.3.2 Immediate addressing

[Function]

Immediate data in the instruction word is transferred to the program counter (PC) and branched.

This function is carried out when the CALL !addr16 or BR !addr16 or CALLF !addr11 instruction is executed.

CALL !addr16 and BR !addr16 instructions can be branched to the entire memory space. However, before branching to a memory bank that is not set by the memory bank select register (BANK), change the setting of the memory bank by using BANK.

The CALLF !addr11 instruction is branched to the 0800H to 0FFFH area.

[Illustration]

In the case of CALL !addr16 and BR !addr16 instructions

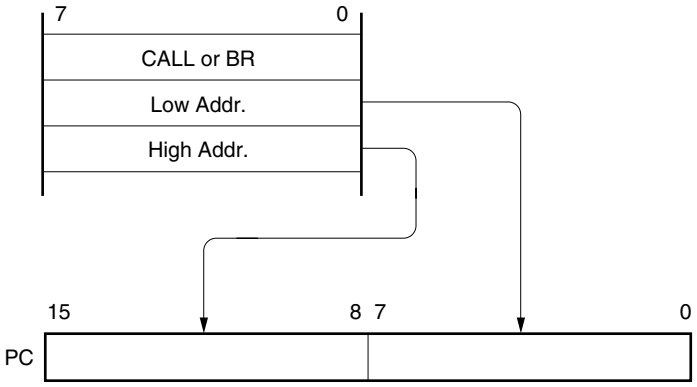

In the case of CALLF !addr11 instruction

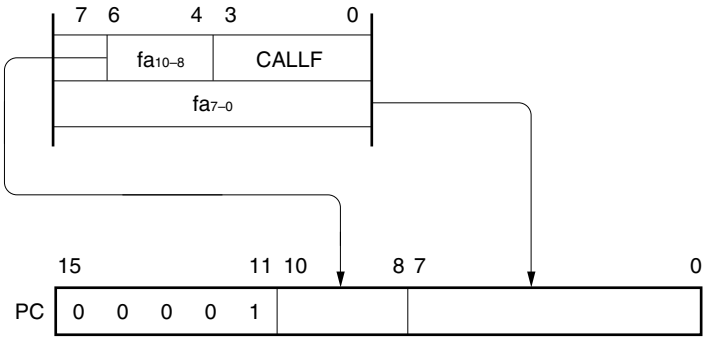

3.3.3 Table indirect addressing

[Function]

Table contents (branch destination address) of the particular location to be addressed by bits 1 to 5 of the immediate data of an operation code are transferred to the program counter (PC) and branched.

This function is carried out when the CALLT [addr5] instruction is executed.

This instruction references the address that is indicated by addr5 and is stored in the memory table from 0040H to 007FH, and allows branching to the entire memory space.

[Illustration]

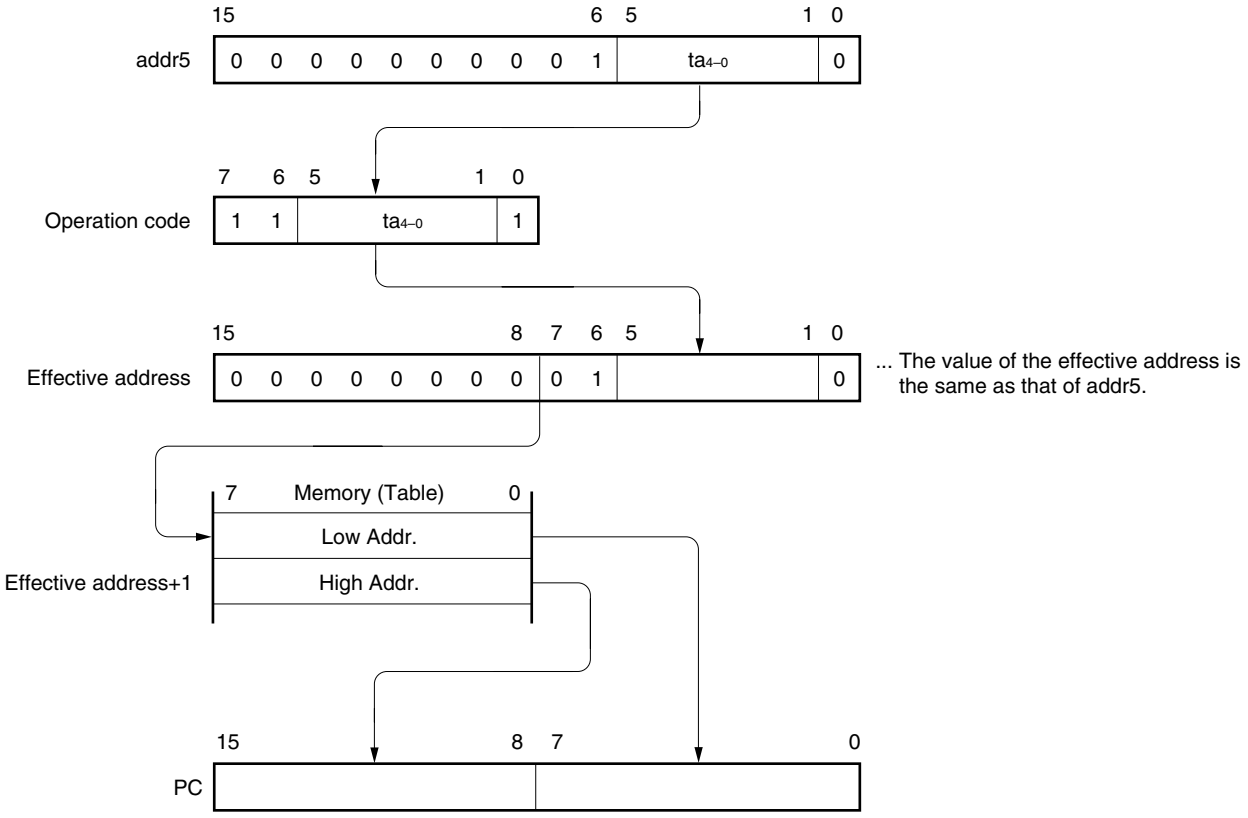

3.3.4 Register addressing

[Function]

Register pair (AX) contents to be specified with an instruction word are transferred to the program counter (PC) and branched.

This function is carried out when the BR AX instruction is executed.

[Illustration]

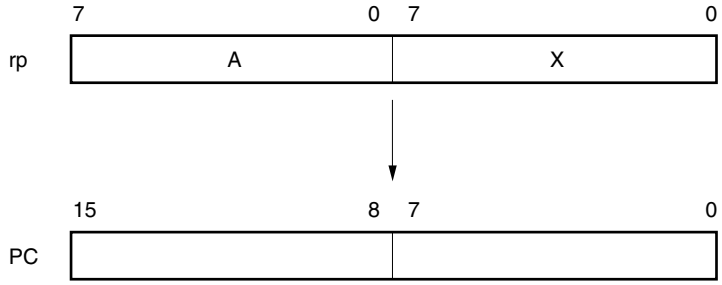

3.4 Operand Address Addressing

The following methods are available to specify the register and memory (addressing) to undergo manipulation during instruction execution.

3.4.1 Implied addressing

[Function]

The register that functions as an accumulator (A and AX) among the general-purpose registers is automatically (implicitly) addressed.

Of the 78K0/Kx2 microcontroller instruction words, the following instructions employ implied addressing.

Instruction	Register to Be Specified by Implied Addressing
MULU	A register for multiplicand and AX register for product storage
DIVUW	AX register for dividend and quotient storage
ADJBA/ADJBS	A register for storage of numeric values that become decimal correction targets
ROR4/ROL4	A register for storage of digit data that undergoes digit rotation

[Operand format]

Because implied addressing can be automatically determined with an instruction, no particular operand format is necessary.

[Description example]

In the case of MULU X

With an 8-bit × 8-bit multiply instruction, the product of the A register and X register is stored in AX. In this example, the A and AX registers are specified by implied addressing.

3.4.2 Register addressing

[Function]

The general-purpose register to be specified is accessed as an operand with the register bank select flags (RBS0 to RBS1) and the register specify codes of an operation code.

Register addressing is carried out when an instruction with the following operand format is executed. When an 8-bit register is specified, one of the eight registers is specified with 3 bits in the operation code.

[Operand format]

Identifier	Description
r	X, A, C, B, E, D, L, H
rp	AX, BC, DE, HL

'r' and 'rp' can be described by absolute names (R0 to R7 and RP0 to RP3) as well as function names (X, A, C, B, E, D, L, H, AX, BC, DE, and HL).

[Description example]

MOV A, C; when selecting C register as r

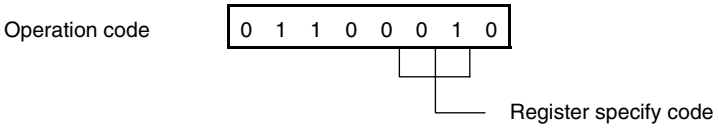

INCW DE; when selecting DE register pair as rp

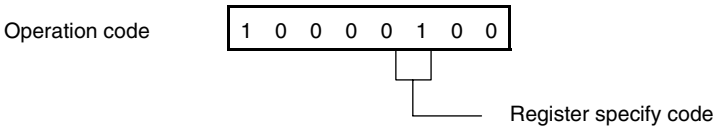

3.4.3 Direct addressing

[Function]

The memory to be manipulated is directly addressed with immediate data in an instruction word becoming an operand address.

This addressing can be carried out for all of the memory spaces. However, before addressing a memory bank that is not set by the memory bank select register (BANK), change the setting of the memory bank by using BANK.

[Operand format]

Identifier	Description
addr16	Label or 16-bit immediate data

[Description example]

MOV A, !0FE00H; when setting !addr16 to FE00H

Operation code	1 0 0 0 1 1 1 0	OP code
	0 0 0 0 0 0 0 0	00H
	1 1 1 1 1 1 1 0	FEH

[Illustration]

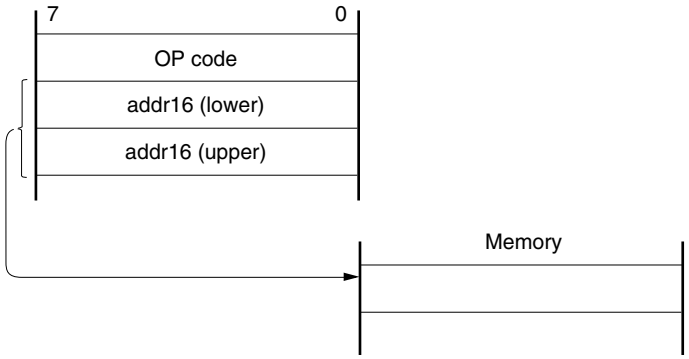

3.4.4 Short direct addressing

[Function]

The memory to be manipulated in the fixed space is directly addressed with 8-bit data in an instruction word.

This addressing is applied to the 256-byte space FE20H to FF1FH. Internal high-speed RAM and special function registers (SFRs) are mapped at FE20H to FEFFH and FF00H to FF1FH, respectively.

The SFR area (FF00H to FF1FH) where short direct addressing is applied is a part of the overall SFR area. Ports that are frequently accessed in a program and compare and capture registers of the timer/event counter are mapped in this area, allowing SFRs to be manipulated with a small number of bytes and clocks.

When 8-bit immediate data is at 20H to FFH, bit 8 of an effective address is set to 0. When it is at 00H to 1FH, bit 8 is set to 1. See the **[Illustration]** shown below.

[Operand format]

Identifier	Description
saddr	Immediate data that indicate label or FE20H to FF1FH
saddrp	Immediate data that indicate label or FE20H to FF1FH (even address only)

[Description example]

```
LB1 EQU 0FE30H   ; Defines FE30H by LB1.
      :
MOV LB1, A       ; When LB1 indicates FE30H of the saddr area and the value of register A is transferred to that
                   address
```

Operation code | 1 1 1 1 0 0 1 0 | OP code

| 0 0 1 1 0 0 0 0 | 30H (saddr-offset) |

[Illustration]

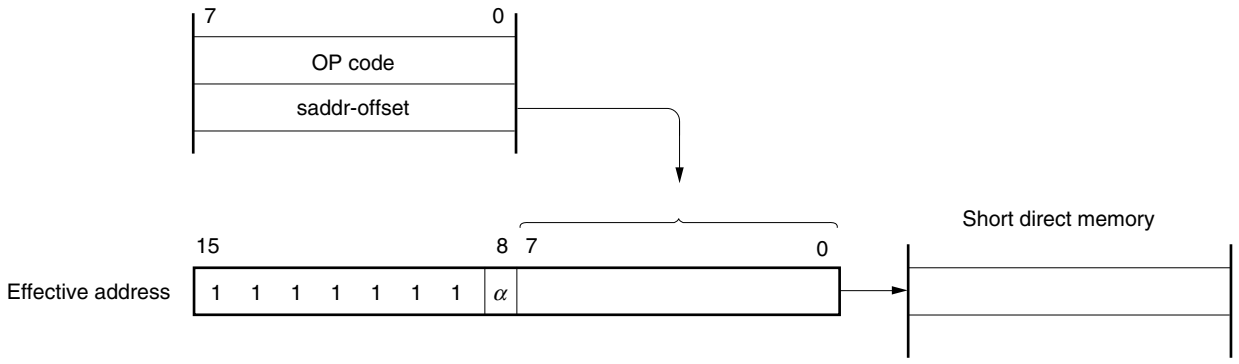

When 8-bit immediate data is 20H to FFH, $\alpha = 0$

When 8-bit immediate data is 00H to 1FH, $\alpha = 1$

3.4.5 Special function register (SFR) addressing

[Function]

A memory-mapped special function register (SFR) is addressed with 8-bit immediate data in an instruction word. This addressing is applied to the 240-byte spaces FF00H to FFCFH and FFE0H to FFFFH. However, the SFRs mapped at FF00H to FF1FH can be accessed with short direct addressing.

[Operand format]

Identifier	Description
sfr	Special function register name
sfrp	16-bit manipulatable special function register name (even address only)

[Description example]

MOV PM0, A; when selecting PM0 (FF20H) as sfr

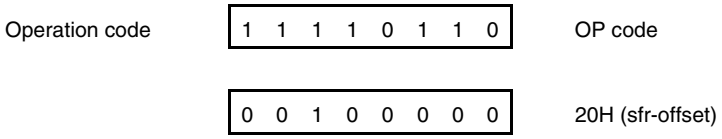

[Illustration]

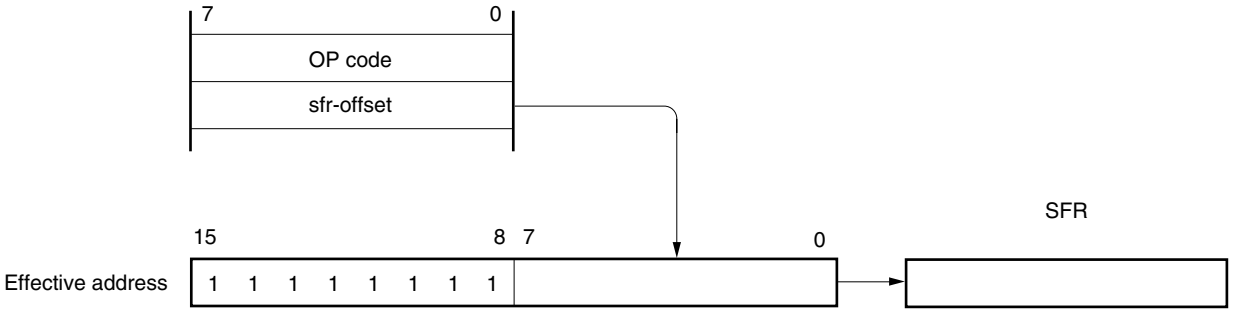

3.4.6 Register indirect addressing

[Function]

Register pair contents specified by a register pair specify code in an instruction word and by a register bank select flag (RBS0 and RBS1) serve as an operand address for addressing the memory.

This addressing can be carried out for all of the memory spaces. However, before addressing a memory bank that is not set by the memory bank select register (BANK), change the setting of the memory bank by using BANK.

[Operand format]

Identifier	Description
–	[DE], [HL]

[Description example]

MOV A, [DE]; when selecting [DE] as register pair

Operation code	1	0	0	0	0	1	0	1

[Illustration]

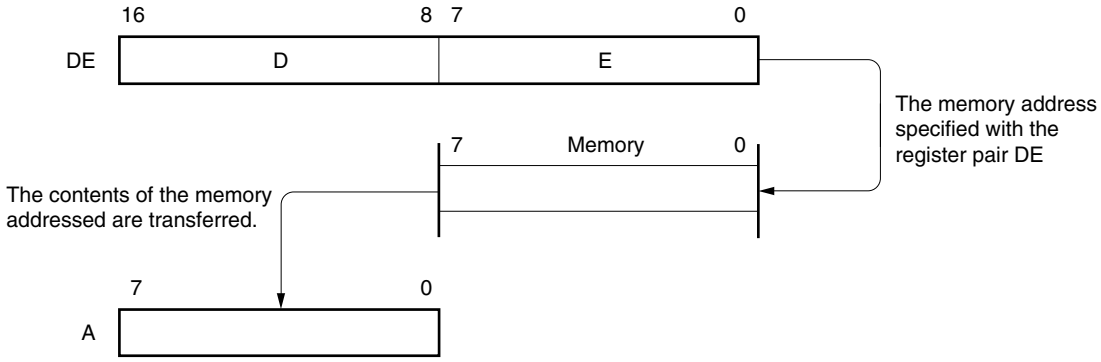

3.4.7 Based addressing

[Function]

8-bit immediate data is added as offset data to the contents of the base register, that is, the HL register pair in the register bank specified by the register bank select flag (RBS0 and RBS1), and the sum is used to address the memory. Addition is performed by expanding the offset data as a positive number to 16 bits. A carry from the 16th bit is ignored.

This addressing can be carried out for all of the memory spaces. However, before addressing a memory bank that is not set by the memory bank select register (BANK), change the setting of the memory bank by using BANK.

[Operand format]

Identifier	Description
–	[HL + byte]

[Description example]

MOV A, [HL + 10H]; when setting byte to 10H

Operation code	1	0	1	0	1	1	1	0
	0	0	0	1	0	0	0	0

[Illustration]

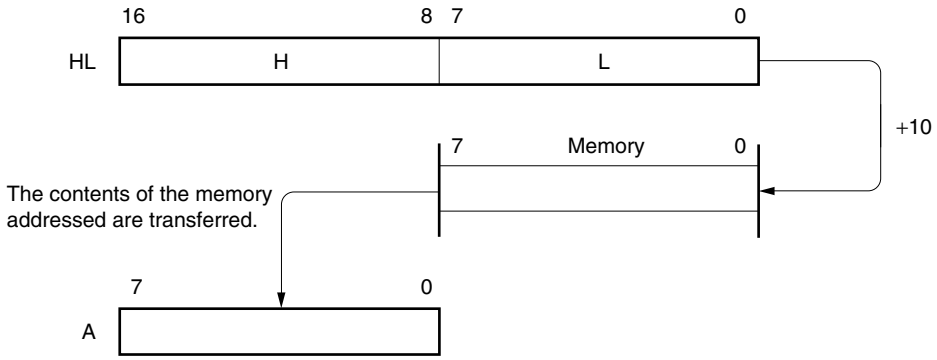

3.4.8 Based indexed addressing

[Function]

The B or C register contents specified in an instruction word are added to the contents of the base register, that is, the HL register pair in the register bank specified by the register bank select flag (RBS0 and RBS1), and the sum is used to address the memory. Addition is performed by expanding the B or C register contents as a positive number to 16 bits. A carry from the 16th bit is ignored.

This addressing can be carried out for all of the memory spaces. However, before addressing a memory bank that is not set by the memory bank select register (BANK), change the setting of the memory bank by using BANK.

[Operand format]

Identifier	Description
–	[HL + B], [HL + C]

[Description example]

MOV A, [HL +B]; when selecting B register

Operation code	1	0	1	0	1	0	1	1

[Illustration]

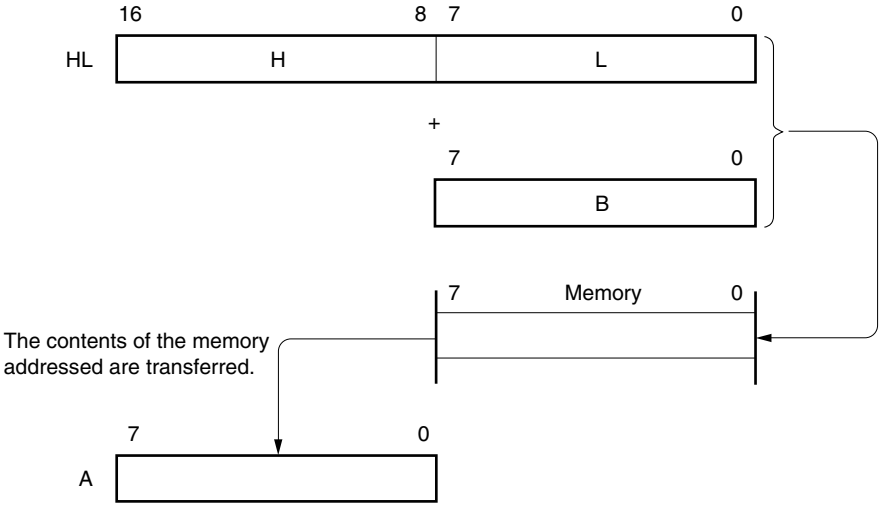

3.4.9 Stack addressing

[Function]

The stack area is indirectly addressed with the stack pointer (SP) contents.

This addressing method is automatically employed when the PUSH, POP, subroutine call and return instructions are executed or the register is saved/reset upon generation of an interrupt request.

With stack addressing, only the internal high-speed RAM area can be accessed.

[Description example]

PUSH DE; when saving DE register

Operation code	1	0	1	1	0	1	0	1

[Illustration]

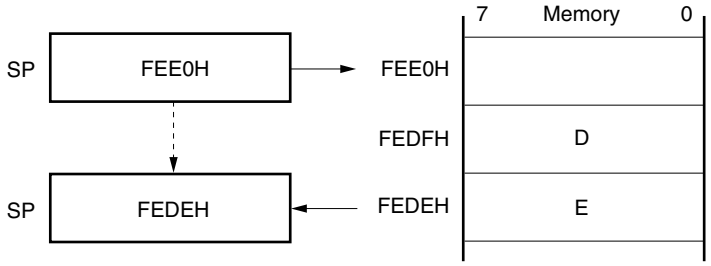

CHAPTER 4 MEMORY BANK SELECT FUNCTION (PRODUCTS WHOSE FLASH MEMORY IS AT LEAST 96 KB ONLY)

4.1 Memory Bank

The μPD78F05x6, 78F05x6A, 78F05x7, 78F05x7A, 78F05x7D and 78F05x7DA of 78K0/KD2, 78K0/KE2, and 78K0/KF2 implement a ROM capacity of 96 KB or 128 KB by selecting a memory bank from a memory space of 8000H to BFFFH.

The μPD78F05x6 and 78F05x6A have memory banks 0 to 3, and the μPD78F05x7, 78F05x7A, 78F05x7D and 78F05x7DA have memory banks 0 to 5, as shown below.

The memory banks are selected by using a memory bank select register (BANK).

Figure 4-1. Internal ROM (Flash Memory) Configuration

(a) μPD78F05x6 and 78F05x6A (products whose flash memory is 96 KB)

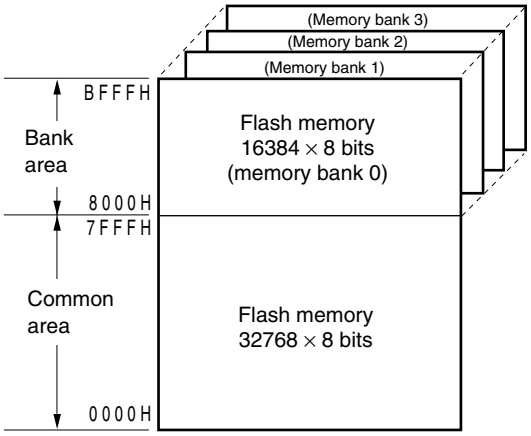

(b) μPD78F05x7, 78F05x7A, 78F05x7D, and 78F05x7DA (products whose flash memory is 128 KB)

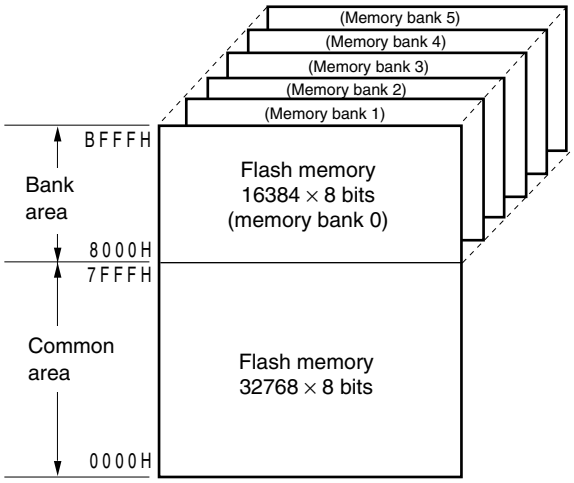

Remark x = 2 to 4

4.2 Difference in Representation of Memory Space

With the 78K0/Kx2 microcontroller products which support the memory bank, addresses can be viewed in the following two different ways.

- Memory bank number + CPU address
- Flash memory real address (HEX FORMAT [BANK])

Figure 4-2. Address View

(a) Memory bank number + CPU address **(b) Flash memory real address (HEX FORMAT [BANK])**

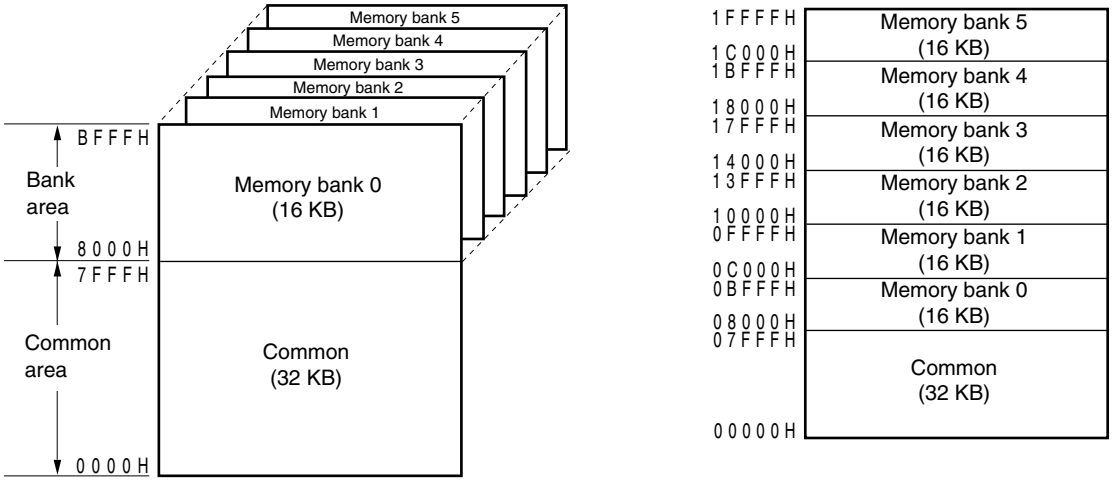

"Memory bank number + CPU address" is represented with a vacancy in the address space, while the flash memory real address is shown with no vacancy in the address space.

"Memory bank number + CPU address" is used for addressing in the user program. For on-board programming and self programming not using the self programming sample library[Note 1], the flash memory real address is used.

Note that the HEX file that is output by the assembler (RA78K0) by default uses the flash memory real address. For address representation of the other tools such as the simulator and the debugger[Note 2], see **Table 4-1**.

Notes 1. "Memory bank number + CPU address" can be used when performing self programming, using the self programming sample library, because the addresses are automatically translated.

2. SM+ for 78K0, SM+ for 78K0/Kx2, and ID78K0-QB

Table 4-1. Memory Bank Address Representation

Memory Bank Number	CPU Address	Flash Memory Real Address	Address Representation in Simulator and Debugger[Note 1]
Memory bank 0	08000H-0BFFFH[Note 2]	08000H-0BFFFH	08000H-0BFFFH
Memory bank 1		0C000H-0FFFFH	18000H-1BFFFH
Memory bank 2		10000H-13FFFH	28000H-2BFFFH
Memory bank 3		14000H-17FFFH	38000H-3BFFFH
Memory bank 4		18000H-1BFFFH	48000H-4BFFFH
Memory bank 5		1C000H-1FFFFH	58000H-5BFFFH

Notes 1. SM+ for 78K0, SM+ for 78K0/Kx2, and ID78K0-QB

2. Set the memory bank to be used by the memory bank select register (BANK) (see **Figure 4-3**).

For details, see the **RA78K0 Ver. 3.80 Assembler Package Operation User's Manual (U17199E)** and the **78K0 Microcontrollers Self Programming Library Type01 User's Manual (U18274E)**.

4.3 Memory Bank Select Register (BANK)

The memory bank select register (BANK) is used to select a memory bank to be used.

BANK can be set by an 8-bit memory manipulation instruction.

Reset signal generation clears BANK to 00H.

Figure 4-3. Format of Memory Bank Select Register (BANK)

Address: FFF3H After reset: 00H R/W

Symbol	7	6	5	4	3	2	1	0
BANK	0	0	0	0	0	BANK2	BANK1	BANK0

BANK2	BANK1	BANK0	Bank setting	
			μPD78F05x6 and 78F05x6A	μPD78F05x7, 78F05x7A, 78F05x7D, and 78F05x7DA
0	0	0	Common area (32 KB) + memory bank 0 (16 KB)	
0	0	1	Common area (32 KB) + memory bank 1 (16 KB)	
0	1	0	Common area (32 KB) + memory bank 2 (16 KB)	
0	1	1	Common area (32 KB) + memory bank 3 (16 KB)	
1	0	0	Setting prohibited	Common area (32 KB) + memory bank 4 (16 KB)
1	0	1		Common area (32 KB) + memory bank 5 (16 KB)
Other than above			Setting prohibited	

Caution Be sure to change the value of the BANK register in the common area (0000H to 7FFFH). If the value of the BANK register is changed in the bank area (8000H to BFFFH), an inadvertent program loop occurs in the CPU. Therefore, never change the value of the BANK register in the bank area.

Remark x = 2 to 4

4.4 Selecting Memory Bank

The memory bank selected by the memory bank select register (BANK) is reflected on the bank area and can be addressed. Therefore, to access a memory bank different from the one currently selected, that memory bank must be selected by using the BANK register.

The value of the BANK register must not be changed in the bank area (8000H to BFFFH). Therefore, to change the memory bank, branch an instruction to the common area (0000H to 7FFFH) and change the value of the BANK register in that area.

Cautions 1. Instructions cannot be fetched between different memory banks.

2. Branching and accessing cannot be directly executed between different memory banks. Execute branching or accessing between different memory banks via the common area.

3. Allocate interrupt servicing in the common area.

4. An instruction that extends from 7FFFH to 8000H can only be executed in memory bank 0.

4.4.1 Referencing values between memory banks

Values cannot be directly referenced from one memory bank to another.

To access another memory bank from one memory bank, branch once to the common area (0000H to 7FFFH), change the setting of the BANK register there, and then reference a value.

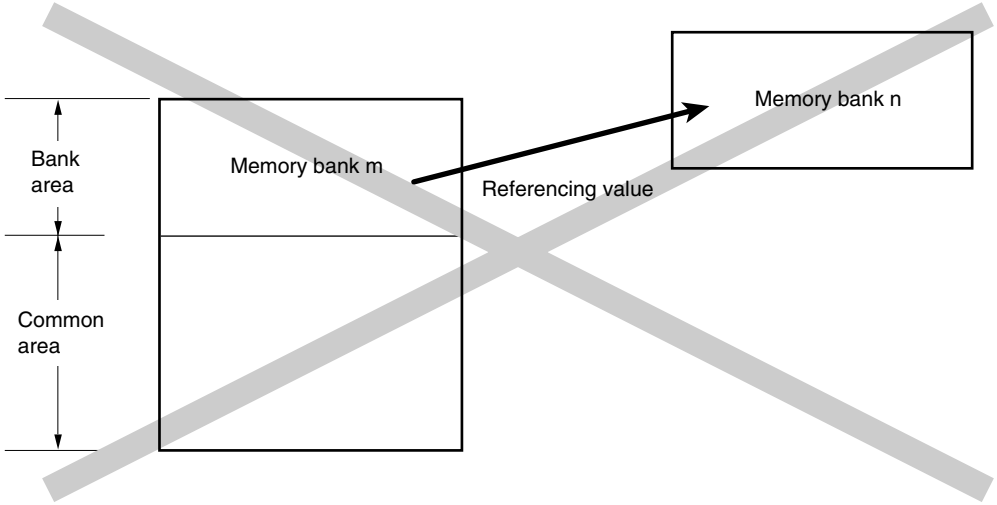

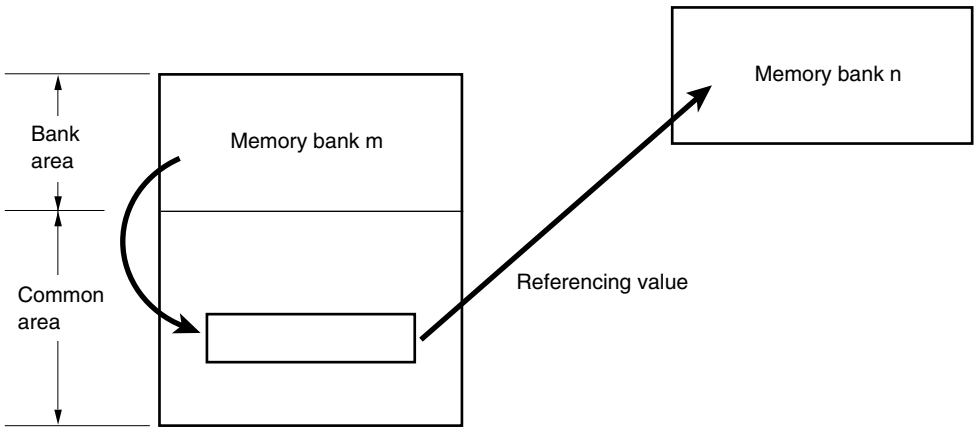

- Software example (to store a value to be referenced in register A)

```
RAMD    DSEG    SADDR
R_BNKA: DS      2                               ; Secures RAM for specifying an address at the reference destination.
R_BNKN: DS      1                               ; Secures RAM for specifying a memory bank number at the reference destination.
R_BNKRN: DS     1                               ; Secures RAM for saving a memory bank number at the reference source.

-------------------------------------------------------------------------------
ETRC    CSEG    UNIT
ENTRY:

        MOV     R_BNKN,#BANKNUM  DATA1          ; Stores the memory bank number at the reference destination.
        MOVW    R_BNKA,#DATA1                   ; Stores the address at the reference destination.
        CALL    !BNKRD                          ; Calls a subroutine for referencing between memory banks.
                :
                :
-------------------------------------------------------------------------------
BNKC    CSEG    AT      7000H

BNKRD:                                          ; Subroutine for referencing between memory banks.
        PUSH    HL                              ; Saves the contents of the HL register.
        MOV     A,R_BNKN                        ; Acquires the memory bank number at the reference destination.
        XCH     A,BANK                          ; Swaps the memory bank number at the reference source for that at the reference
                                                ; destination
        MOV     R_BNKRN,A                       ; Saves the memory bank number at the reference source.
        XCHW    AX,HL                           ; Saves the contents of the X register.
        MOVW    AX,R_BNKA                       ; Acquires the address at the reference destination.
        XCHW    AX,HL                           ; Specifies the address at the reference destination.
        MOV     A,[HL]                          ; Reads the target value.
        XCH     A,R_BNKRN                       ; Acquires the memory bank number at the reference source.
        MOV     BANK,A                          ; Specifies the memory bank number at the reference source.
        MOV     A,R_BNKRN                       ; Write the target value to the A register.
        POP     HL                              ; Restores the contents of the HL register.

        RET                                     ; Return
-------------------------------------------------------------------------------
DATA    CSEG    BANK3
DATA1:  DB      0AAH

END
```

4.4.2 Branching instruction between memory banks

Instructions cannot branch directly from one memory bank to another.

To branch an instruction from one memory bank to another, branch once to the common area (0000H to 7FFFH), change the setting of the BANK register there, and then execute the branch instruction again.

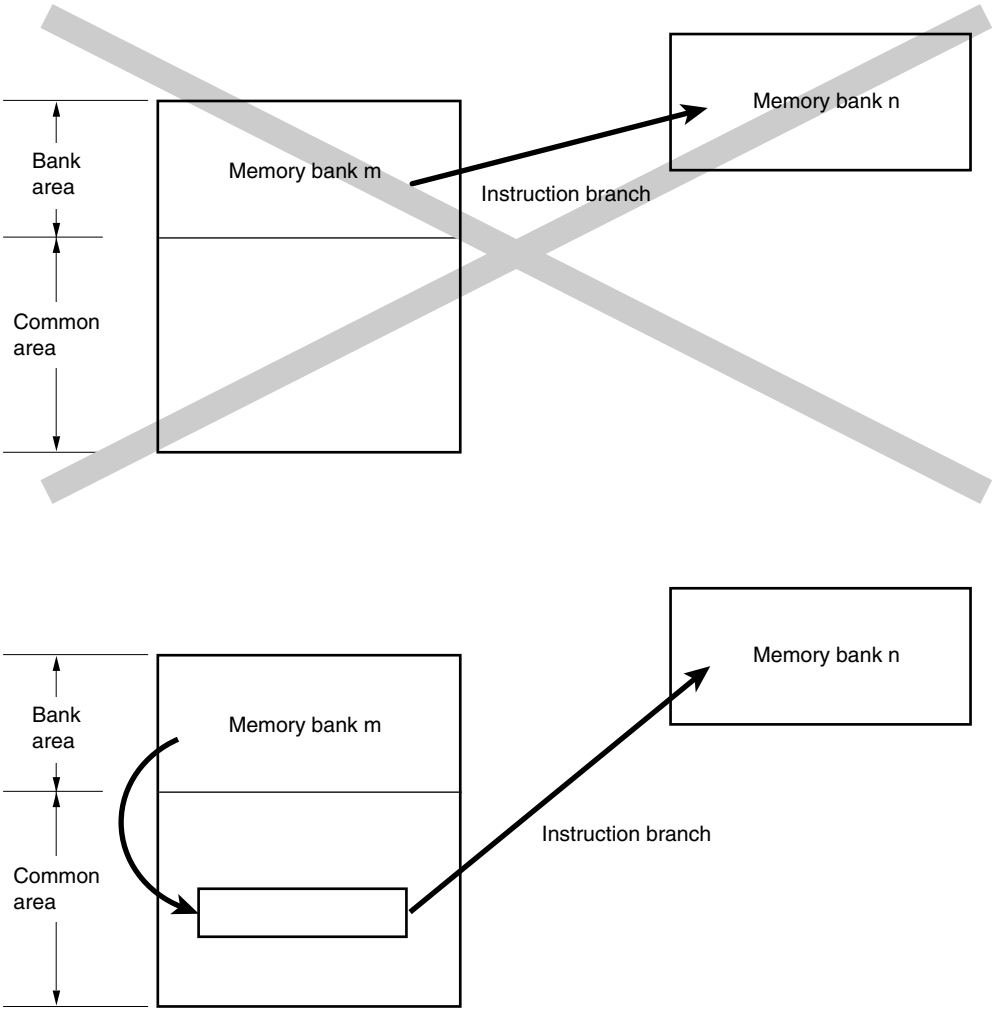

- Software example 1 (to branch from all areas)

```
RAMD     DSEG   SADDR
R_BNKA:  DS     2                          ; Secures RAM for specifying a memory bank at the branch destination.
R_BNKN:  DS     1                          ; Secures RAM for specifying a memory bank number at the branch destination.
RSAVEAX: DS     2                          ; Secures RAM for saving the AX register.

ETRC     CSEG   UNIT
ENTRY:
         MOV    R_BNKN,#BANKNUM  TEST      ; Stores the memory bank number at the branch destination in RAM.
         MOVW   R_BNKA,#TEST               ; Stores the address at the branch destination in RAM.
         BR     !BNKBR                     ; Branches to inter-memory bank branch processing.
           :
           :

BNKC     CSEG   AT       7000H
BNKBR:
         MOVW   RSAVEAX,AX                 ; Saves the AX register.
         MOV    A,R_BNKN                   ; Acquires the memory bank number at the branch destination.
         MOV    BANK,A                     ; Specifies the memory bank number at the branch destination.
         MOVW   AX,R_BNKA                  ; Specifies the address at the branch destination.
         PUSH   AX                         ; Sets the address at the branch destination to stack.
         MOVW   RSAVEAX,AX                 ; Restores the AX register.
         RET                               ; Branch

BN3      CSEG   BANK3
TEST:
         MOV ···
           :
           :
END
```

- Software example 2 (to branch from common area to any bank area)

```
ETRC     CSEG   AT       2000H
ENTRY:
         MOV    R_BNKN,#BANKNUM TEST       ; Stores the memory bank number at the branch destination in RAM.
         BR     !TEST                      ; Stores the address at the branch destination in RAM.

BN3      CSEG   BANK3
TEST:
         MOV ···
           :
           :
END
```

4.4.3 Subroutine call between memory banks

Subroutines cannot be directly called between memory banks.

To call a subroutine between memory banks, branch once to the common area (0000H to 7FFFH), specify the memory bank at the calling destination by using the BANK register there, execute the CALL instruction, and branch to the call destination by that instruction.

At this time, save the current value of the BANK register to RAM. Restore the value of the BANK register before executing the RET instruction.

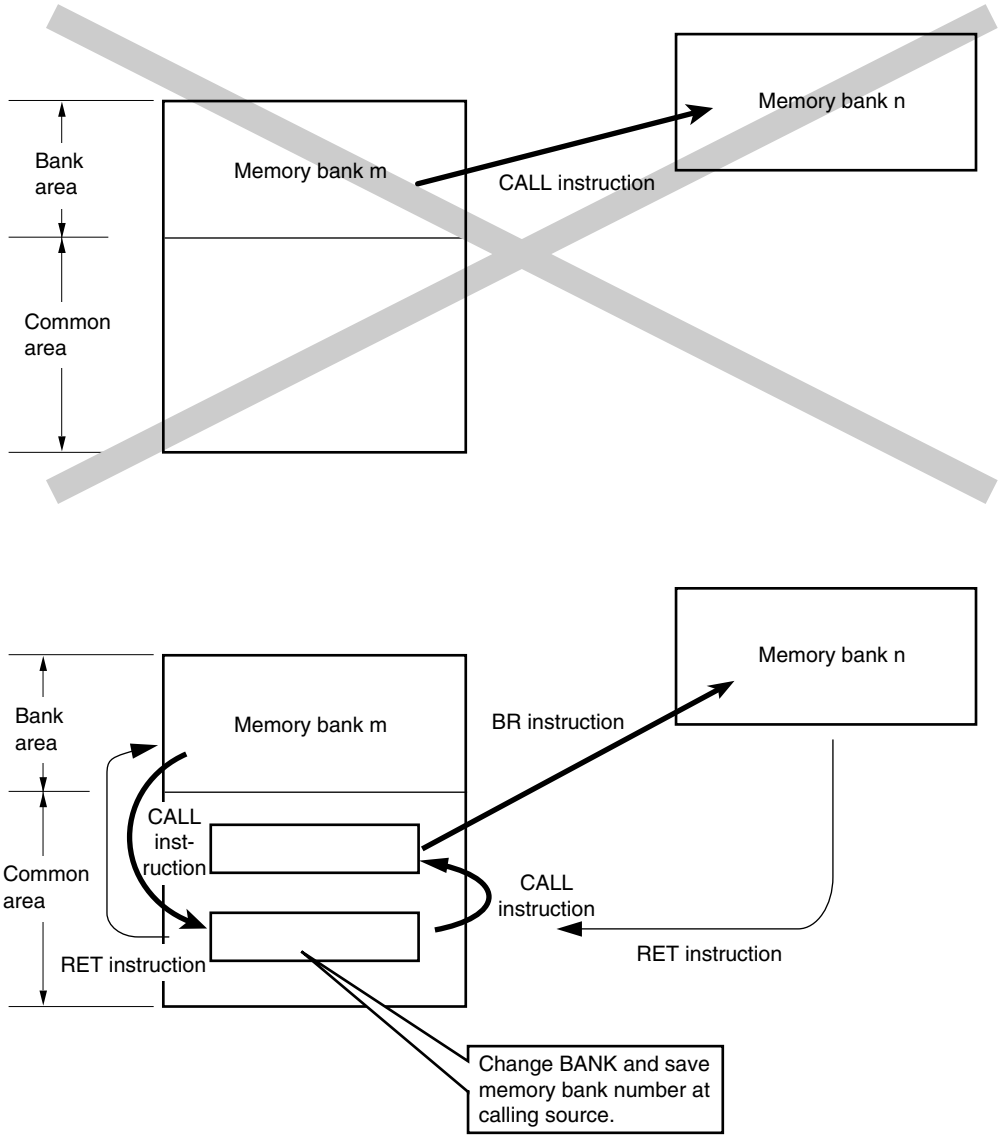

- Software example

```
RAMD      DSEG    SADDR
R_BNKA:   DS      2                          ; Secures RAM for specifying an address at the calling destination.
R_BNKN:   DS      1                          ; Secures RAM for specifying a memory bank number at the calling destination.
R_BNKRN:  DS      1                          ; Secures RAM for saving a memory bank number at the calling source.
RSAVEAX:  DS      2                          ; Secures RAM for saving the AX register.
-------------------------------------------------------------------------------------------------------------------
ETRC      CSEG    UNIT
ENTRY:
          MOV     R_BNKN,#BANKNUM  TEST      ; Store the memory bank number at the calling destination in RAM.
          MOVW    R_BNKA,#TEST               ; Stores the address at the calling destination in RAM.
          CALL    !BNKCAL                    ; Branches to an inter-memory bank calling processing routine.
                  :
                  :
-------------------------------------------------------------------------------------------------------------------
BNKC      CSEG    AT       7000H
BNKCAL:                                      ; Inter-memory bank calling processing routine
          MOVW    RSAVEAX,AX                 ; Saves the AX register.
          MOV     A,R_BNKN                   ; Acquires the memory bank number at the calling destination.
          XCH     A,BANK                     ; Changes the bank and acquires the memory bank number at the calling source.
          MOV     R_BNKRN,A                  ; Saves the memory bank number at the calling source to RAM.
          CALL    !BNKCALS                   ; Calls a subroutine to branch to the calling destination.

          MOVW    RSAVEAX,AX                 ; Saves the AX register.
          XCH     A,R_BNKRN                  ; Acquires the memory bank number at the calling source.
          MOV     BANK,A                     ; Specifies the memory bank number at the calling source.
          MOVW    AX,RSAVEAX                 ; Restores the AX register.
          RET                                ; Returns to the calling source.

BNKCALS:
          MOVW    AX,R_BNKA                  ; Specifies the address at the calling destination.
          PUSH    AX                         ; Sets the address at the calling destination to stack.
          MOVW    AX,RSAVEAX                 ; Restores source AX register.
          RET                                ; Branches to the calling destination.
-------------------------------------------------------------------------------------------------------------------
BN3       CSEG    BANK3
TEST:                                        ;
          MOV ···
              :
              :
          RET
END
```

Remark In the software example above, multiplexed processing is not supported.

4.4.4 Instruction branch to bank area by interrupt

When an interrupt occurs, instructions can branch to the memory bank specified by the BANK register by using the vector table, but it is difficult to identify the BANK register when the interrupt occurs.

Therefore, specify the branch destination address specified by the vector table in the common area (0000H to 7FFFH), specify the memory bank at the branch destination by using the BANK register in the common area, and execute the CALL instruction. At this time, save the BANK register value before the change to RAM, and restore the value of the BANK register before executing the RETI instruction.

Remark Allocate interrupt servicing that requires a quick response in the common area.

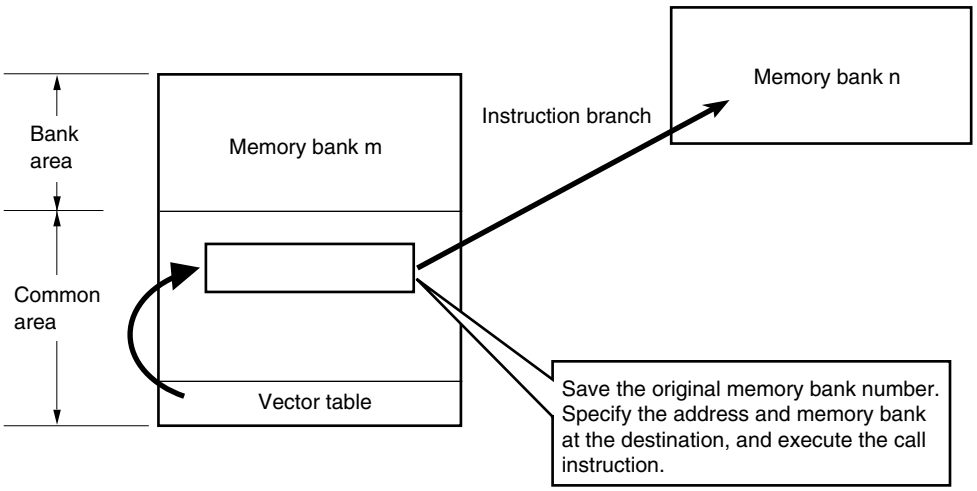

- Software example (when using interrupt request of 16-bit timer/event counter 00)

```
VCTBL   CSEG    AT      0020H
        DW      BNKITM000               ; Specifies an address at the timer interrupt destination.

RAMD    DSEG    SADDR
R_BNKRN: DS     1                       ; Secures RAM for saving the memory bank number before the interrupt occurs.

------------------------------------------------------------------------------------------------------

BNKC    CSEG    AT      7000H

BNKITM000:                              ; Inter-memory bank interrupt servicing routine
        PUSH    AX                      ; Saves the contents of the AX register.

        MOV     A,BANK
        MOV     R_BNKRN,A               ; Saves the memory bank number before the interrupt to RAM.
        MOV     BANK,#BANKNUM TEST      ; Specifies the memory bank number of the interrupt routine.
        CALL    !TEST                   ; Calls the interrupt routine.
        MOV     A,R_BNKRN               ; Restores the memory bank number before the interrupt.
        MOV     BANK,A

        POP     AX                      ; Restores the contents of the AX register.

        RETI

------------------------------------------------------------------------------------------------------

BN3     CSEG    BANK3
TEST:                                   ; Interrupt servicing routine
        MOV ···
          :
          :
        RET
END
```

Remark Note the following points to use the memory bank select function efficiently.

- Allocate a routine that is used often in the common area.
- If a value that is planned to be referenced is placed in RAM, it can be referenced from all of the areas.
- If the reference destination and the branch destination of the routine placed in a memory bank are placed in the same memory bank, then the code size and processing are more efficient.
- Allocate interrupt servicing that requires a quick response in the common area.

CHAPTER 5 PORT FUNCTIONS

5.1 Port Functions

Pin I/O buffer power supplies depend on the product. The relationship between these power supplies and the pins is shown below.

Table 5-1. Pin I/O Buffer Power Supplies (AV_{REF}, V_{DD})

- 78K0/KB2: 30-pin plastic SSOP (7.62 mm (300))
- 78K0/KC2: 38-pin plastic SSOP (7.62 mm (300)), 44-pin plastic LQFP (10x10), 48-pin plastic LQFP (fine pitch) (7x7)
- 78K0/KD2: 52-pin plastic LQFP (10x10)

Power Supply	Corresponding Pins
AV_{REF}	P20 to P27
V_{DD}	Pins other than P20 to P27

Table 5-2. Pin I/O Buffer Power Supplies (AV_{REF}, EV_{DD}, V_{DD})

- 78K0/KB2: 36-pin plastic FLGA (4x4)
- 78K0/KE2: 64-pin plastic LQFP (fine pitch) (10x10), 64-pin plastic LQFP (14x14), 64-pin plastic LQFP (12x12), 64-pin plastic TQFP (fine pitch) (7x7), 64-pin plastic FLGA (5x5) , 64-pin plastic FBGA (4x4)
- 78K0/KF2: 80-pin plastic LQFP (14x14), 80-pin plastic LQFP (fine pitch) (12x12)

Power Supply	Corresponding Pins
AV_{REF}	P20 to P27
EV_{DD}	Port pins other than P20 to P27 and P121 to P124
V_{DD}	• P121 to P124 • Non-port pins

78K0/Kx2 microcontrollers are provided with digital I/O ports, which enable variety of control operations. The functions of each port are shown in Table 5-3.

In addition to the function as digital I/O ports, these ports have several alternate functions. For details of the alternate functions, see **CHAPTER 2 PIN FUNCTIONS**.

Table 5-3. Port Functions (1/3)

KB2	KC2	KD2	KES	KF2	Function Name	I/O	Function	After Reset	Alternate Function
√	√	√	√	√	P00	I/O	Port 0. I/O port. Input/output can be specified in 1-bit units. Use of an on-chip pull-up resistor can be specified by a software setting.	Input port	TI000
√	√	√	√	√	P01				TI010/TO00
–	–	Note 1	Note 2	√	P02				SO11
–	–	Note 1	Note 2	√	P03				SI11
–	–	–	Note 2	√	P04				$\overline{\text{SCK11}}$
–	–	–	Note 2	√	P05				TI001/$\overline{\text{SSI11}}$
–	–	–	Note 2	√	P06				TI011/TO01
√	√	√	√	√	P10	I/O	Port 1. I/O port. Input/output can be specified in 1-bit units. Use of an on-chip pull-up resistor can be specified by a software setting.	Input port	$\overline{\text{SCK10}}$/TxD0
√	√	√	√	√	P11				SI10/RxD0
√	√	√	√	√	P12				SO10
√	√	√	√	√	P13				TxD6
√	√	√	√	√	P14				RxD6
√	√	√	√	√	P15				TOH0
√	√	√	√	√	P16				TOH1/INTP5
√	√	√	√	√	P17				TI50/TO50
√	√	√	√	√	P20	I/O	Port 2. I/O port. Input/output can be specified in 1-bit units.	Analog input	ANI0
√	√	√	√	√	P21				ANI1
√	√	√	√	√	P22				ANI2
√	√	√	√	√	P23				ANI3
–	√	√	√	√	P24				ANI4
–	√	√	√	√	P25				ANI5
–	Note 3	√	√	√	P26				ANI6
–	Note 3	√	√	√	P27				ANI7
√	√	√	√	√	P30	I/O	Port 3. I/O port. Input/output can be specified in 1-bit units. Use of an on-chip pull-up resistor can be specified by a software setting.	Analog input	INTP1
√	√	√	√	√	P31				INTP2/ OCD1A Note 4
√	√	√	√	√	P32				INTP3/ OCD1B Note 4
√	√	√	√	√	P33				TI51/TO51/ INTP4

Notes 1. The 78K0/KD2 products are only provided with port functions (P02 and P03) and not alternate functions.

2. The 78K0/KE2 products whose flash memory is less than 32 KB are only provided with port functions (P02 to P06) and not alternate functions. The 78K0/KE2 products whose flash memory is at least 48 KB are provided with port functions (P02 to P06) and alternate functions.

3. This is not mounted onto 38-pin products of the 78K0/KC2. For the 38-pin products, be sure to set bits 6 and 7 of PM2 to “1” and bits 6 and 7 of P2 to “0”.

4. OCD1A and OCD1B are provided to the products with an on-chip debug function (μPD78F05xxD and 78F05xxDA) only.

Remark √: Mounted, –: Not mounted

Table 5-3. Port Functions (2/3)

KB2	KC2	KD2	KES	KF2	Function Name	I/O	Function	After Reset	Alternate Function
–	Note 1	√	√	√	P40	I/O	Port 4. I/O port. Input/output can be specified in 1-bit units. Use of an on-chip pull-up resistor can be specified by a software setting.	Input port	–
–	Note 1	√	√	√	P41				–
–	–	–	√	√	P42				–
–	–	–	√	√	P43				–
–	–	–	–	√	P44				–
–	–	–	–	√	P45				–
–	–	–	–	√	P46				–
–	–	–	–	√	P47				–
–	–	–	√	√	P50	I/O	Port 5. I/O port. Input/output can be specified in 1-bit units. Use of an on-chip pull-up resistor can be specified by a software setting.	Input port	–
–	–	–	√	√	P51				–
–	–	–	√	√	P52				–
–	–	–	√	√	P53				–
–	–	–	–	√	P54				–
–	–	–	–	√	P55				–
–	–	–	–	√	P56				–
–	–	–	–	√	P57				–
√	√	√	√	√	P60	I/O	Port 6. I/O port. Output of P60 to P63 is N-ch open-drain output (6 V tolerance). Input/output can be specified in 1-bit units. Only for P64 to P67, use of an on-chip resistor can be specified by a software setting.	Input port	SCL0
√	√	√	√	√	P61				SDA0
–	√	√	√	√	P62				EXSCL0
–	√	√	√	√	P63				–
–	–	–	–	√	P64				–
–	–	–	–	√	P65				–
–	–	–	–	√	P66				–
–	–	–	–	√	P67				–
–	√	√	√	√	P70	I/O	Port 7. I/O port. Input/output can be specified in 1-bit units. Use of an on-chip pull-up resistor can be specified by a software setting.	Input port	KR0
–	√	√	√	√	P71				KR1
–	Note 1	√	√	√	P72				KR2
–	Note 1	√	√	√	P73				KR3
–	Note 2	√	√	√	P74				KR4
–	Note 2	√	√	√	P75				KR5
–	–	√	√	√	P76				KR6
–	–	√	√	√	P77				KR7

Notes 1. This is not mounted onto 38-pin products of the 78K0/KC2. For the 38-pin products, be sure to set bits 0 and 1 of PM4, bits 2 and 3 of PM7, bits 0 and 1 of P4, and bits 2 and 3 of P7 to “0”.

2. This is not mounted onto 38-pin and 44-pin products of the 78K0/KC2. The 48-pin products are only provided with port functions (P74 to P75) and not alternate functions.

Remark √: Mounted, –: Not mounted

Table 5-3. Port Functions (3/3)

KB2	KC2	KD2	KES	KF2	Function Name	I/O	Function	After Reset	Alternate Function
√	√	√	√	√	P120	I/O	Port 12. I/O port. Input/output can be specified in 1-bit units. Only for P120, use of an on-chip pull-up resistor can be specified by a software setting.	Input port	INTP0/EXLVI
√	√	√	√	√	P121				X1/OCD0A Note 3
√	√	√	√	√	P122				X2/EXCLK/ OCD0B Note 3
–	√	√	√	√	P123				XT1
–	√	√	√	√	P124				XT2/EXCLKS
–	Note 1	√	√	√	P130	Output	Port 13. Output-only port.	Output port	–
–	Note 1	√	√	√	P140	I/O	Port 14. I/O port. Input/output can be specified in 1-bit units. Use of an on-chip pull-up resistor can be specified by a software setting.	Input port	PCL/INTP6
–	–	–	Note 2	√	P141				BUZ/BUSY0/ INTP7
–	–	–	–	√	P142				$\overline{\text{SCKA0}}$
–	–	–	–	√	P143				SIA0
–	–	–	–	√	P144				SOA0
–	–	–	–	√	P145				STB0

Notes 1. This is not mounted onto 38-pin and 44-pin products of the 78K0/KC2.

2. The 78K0/KE2 products are not provided with the BUSY0 input function.

3. OCD0A and OCD0B are provided to the products with an on-chip debug function (μPD78F05xxD and 78F05xxDA) only.

Remark √: Mounted, –: Not mounted

5.2 Port Configuration

Ports include the following hardware.

Table 5-4. Port Configuration

Item	Configuration
Control registers	• 78K0/KB2 Port mode register (PMxx): PM0 to PM3, PM6, PM12 Port register (Pxx): P0 to P3, P6, P12 Pull-up resistor option register (PUxx): PU0, PU1, PU3, PU12 A/D port configuration register (ADPC) • 38-pin and 44-pin products of 78K0/KC2 Port mode register (PMxx): PM0 to PM4, PM6, PM7, PM12 Port register (Pxx): P0 to P4, P6, P7, P12 Pull-up resistor option register (PUxx): PU0, PU1, PU3, PU4, PU7, PU12 A/D port configuration register (ADPC) • 48-pin products of 78K0/KC2, 78K0/KD2 Port mode register (PMxx): PM0 to PM4, PM6, PM7, PM12, PM14 Port register (Pxx): P0 to P4, P6, P7, P12 to P14 Pull-up resistor option register (PUxx): PU0, PU1, PU3, PU4, PU7, PU12, PU14 A/D port configuration register (ADPC) • 78K0/KE2 Port mode register (PMxx): PM0 to PM7, PM12, PM14 Port register (Pxx): P0 to P7, P12 to P14 Pull-up resistor option register (PUxx): PU0, PU1, PU3 to PU5, PU7, PU12, PU14 A/D port configuration register (ADPC) • 78K0/KF2 Port mode register (PMxx): PM0 to PM7, PM12, PM14 Port register (Pxx): P0 to P7, P12 to P14 Pull-up resistor option register (PUxx): PU0, PU1, PU3 to PU7, PU12, PU14 A/D port configuration register (ADPC)
Port	• 78K0/KB2: Total: 23 (CMOS I/O: 21, N-ch open drain I/O: 2) • 38-pin products of 78K0/KC2: Total: 31 (CMOS I/O: 27, N-ch open drain I/O: 4) • 44-pin products of 78K0/KC2: Total: 37 (CMOS I/O: 33, N-ch open drain I/O: 4) • 48-pin products of 78K0/KC2: Total: 41 (CMOS I/O: 36, CMOS output: 1, N-ch open drain I/O: 4) • 78K0/KD2: Total: 45 (CMOS I/O: 40, CMOS output: 1, N-ch open drain I/O: 4) • 78K0/KE2: Total: 55 (CMOS I/O: 50, CMOS output: 1, N-ch open drain I/O: 4) • 78K0/KF2: Total: 71 (CMOS I/O: 66, CMOS output: 1, N-ch open drain I/O: 4)
Pull-up resistor	• 78K0/KB2: Total: 15 • 38-pin products of 78K0/KC2: Total: 17 • 44-pin products of 78K0/KC2: Total: 21 • 48-pin products of 78K0/KC2: Total: 24 • 78K0/KD2: Total: 28 • 78K0/KE2: Total: 38 • 78K0/KF2: Total: 54

5.2.1 Port 0

	78K0/KB2	78K0/KC2	78K0/KD2	78K0/KE2		78K0/KF2
				Products whose flash memory is less than 32 KB	Products whose flash memory is at least 48 KB	
P00/TI000	√		√	√	√	
P01/TI010/TO00	√		√	√	√	
P02/SO11	–		P02Note	P02Note	√	
P03/SI11	–		P03Note	P03Note	√	
P04/$\overline{\text{SCK11}}$	–		–	P04Note	√	
P05/TI001/$\overline{\text{SSI11}}$	–		–	P05Note	√	
P06/TI011/TO01	–		–	P06Note	√	

Note The 78K0/KE2 products whose flash memory is less than 32 KB and 78K0/KD2 products are only provided with port functions and not alternate functions.

Remark √: Mounted, –: Not mounted

Port 0 is an I/O port with an output latch. Port 0 can be set to the input mode or output mode in 1-bit units using port mode register 0 (PM0). When the P00 to P06 pins are used as an input port, use of an on-chip pull-up resistor can be specified in 1-bit units by pull-up resistor option register 0 (PU0).

This port can also be used for timer I/O, serial interface data I/O, clock I/O, and chip select input.

Reset signal generation sets port 0 to input mode.

Figures 5-1 to 5-6 show block diagrams of port 0.

Caution To use P02/SO11 and P04/$\overline{\text{SCK11}}$ as general-purpose ports, set serial operation mode register 11 (CSIM11) and serial clock selection register 11 (CSIC11) to the default status (00H).

Figure 5-1. Block Diagram of P00

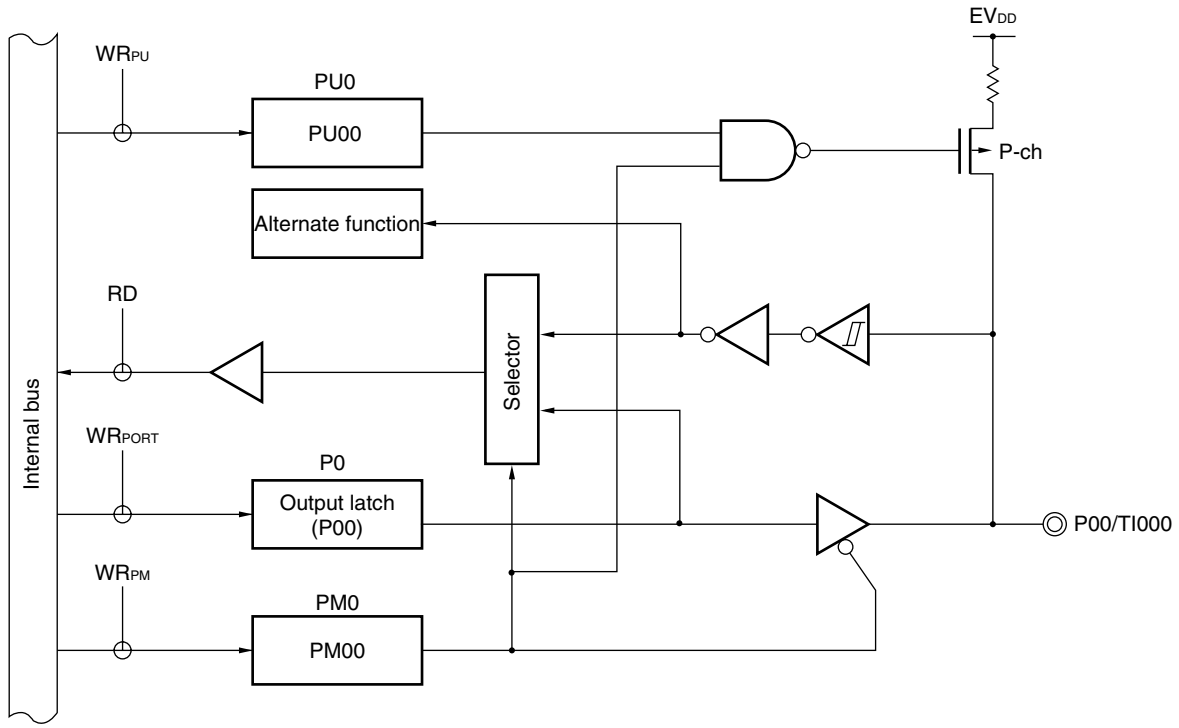

P0: Port register 0
PU0: Pull-up resistor option register 0
PM0: Port mode register 0
RD: Read signal
WR××: Write signal

Remark With products not provided with an EV_{DD} or EV_{SS} pin, replace EV_{DD} with V_{DD}, or replace EV_{SS} with V_{SS}.

Figure 5-2. Block Diagram of P01

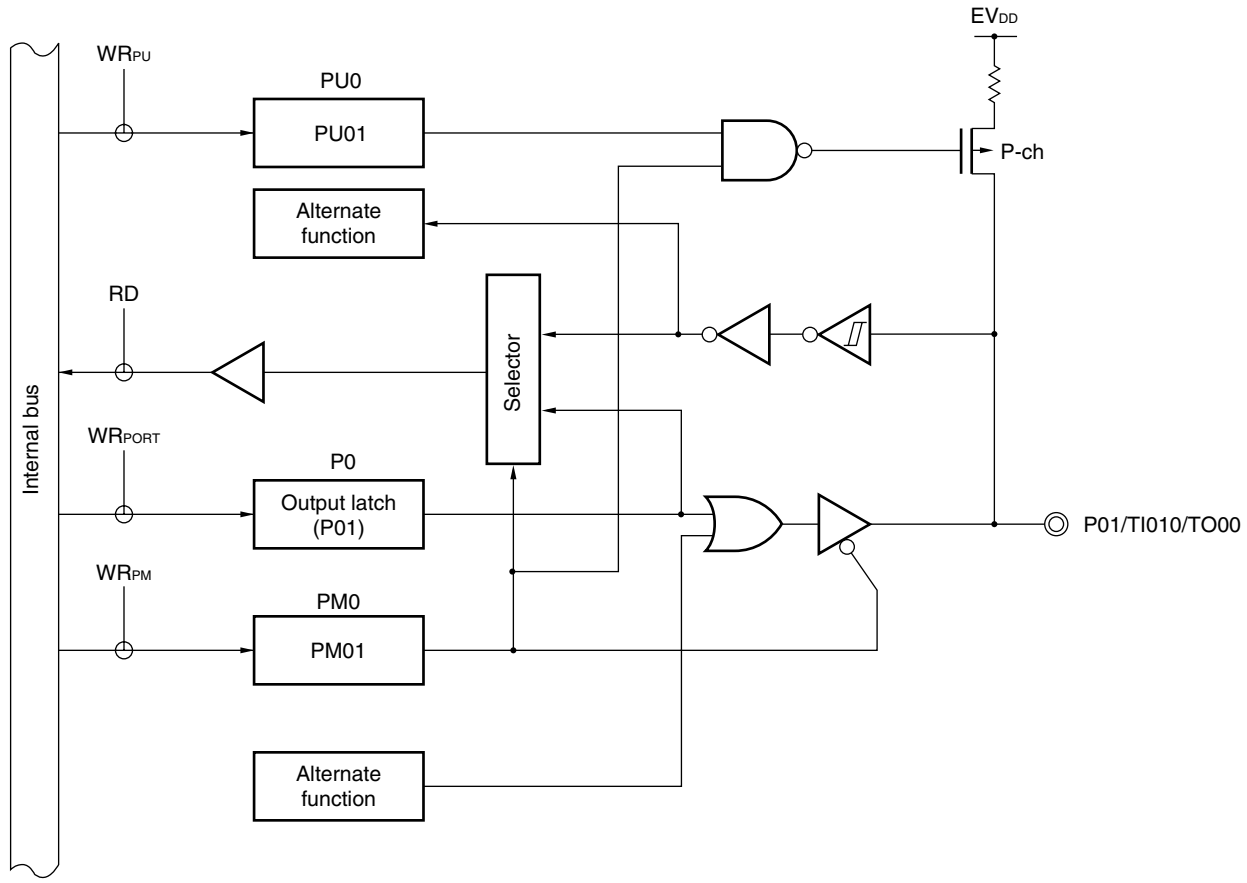

P0: Port register 0
PU0: Pull-up resistor option register 0
PM0: Port mode register 0
RD: Read signal
WR××: Write signal

Remark With products not provided with an EVDD or EVSS pin, replace EVDD with VDD, or replace EVSS with VSS.

Figure 5-3. Block Diagram of P02 (1/2)

(1) 78K0/KE2 products whose flash memory is less than 32 KB and 78K0/KD2

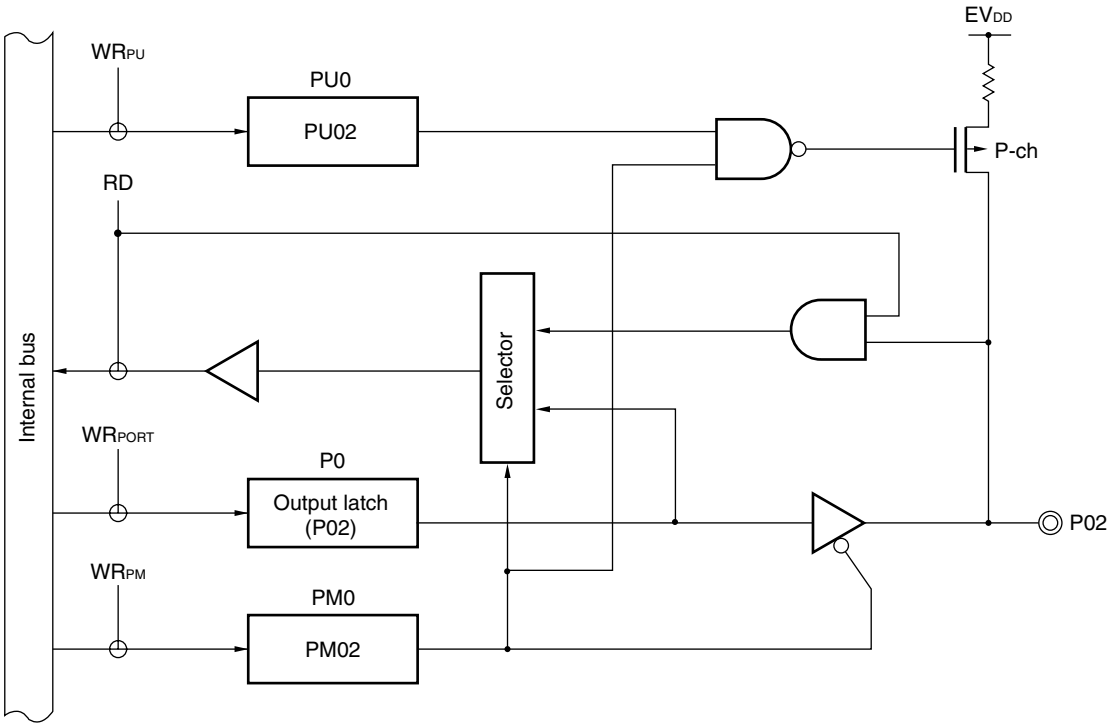

P0: Port register 0
PU0: Pull-up resistor option register 0
PM0: Port mode register 0
RD: Read signal
WR××: Write signal

Remark With products not provided with an EV_{DD} or EV_{SS} pin, replace EV_{DD} with V_{DD}, or replace EV_{SS} with V_{SS}.

Figure 5-3. Block Diagram of P02 (2/2)

(2) 78K0/KE2 products whose flash memory is at least 48 KB and 78K0/KF2

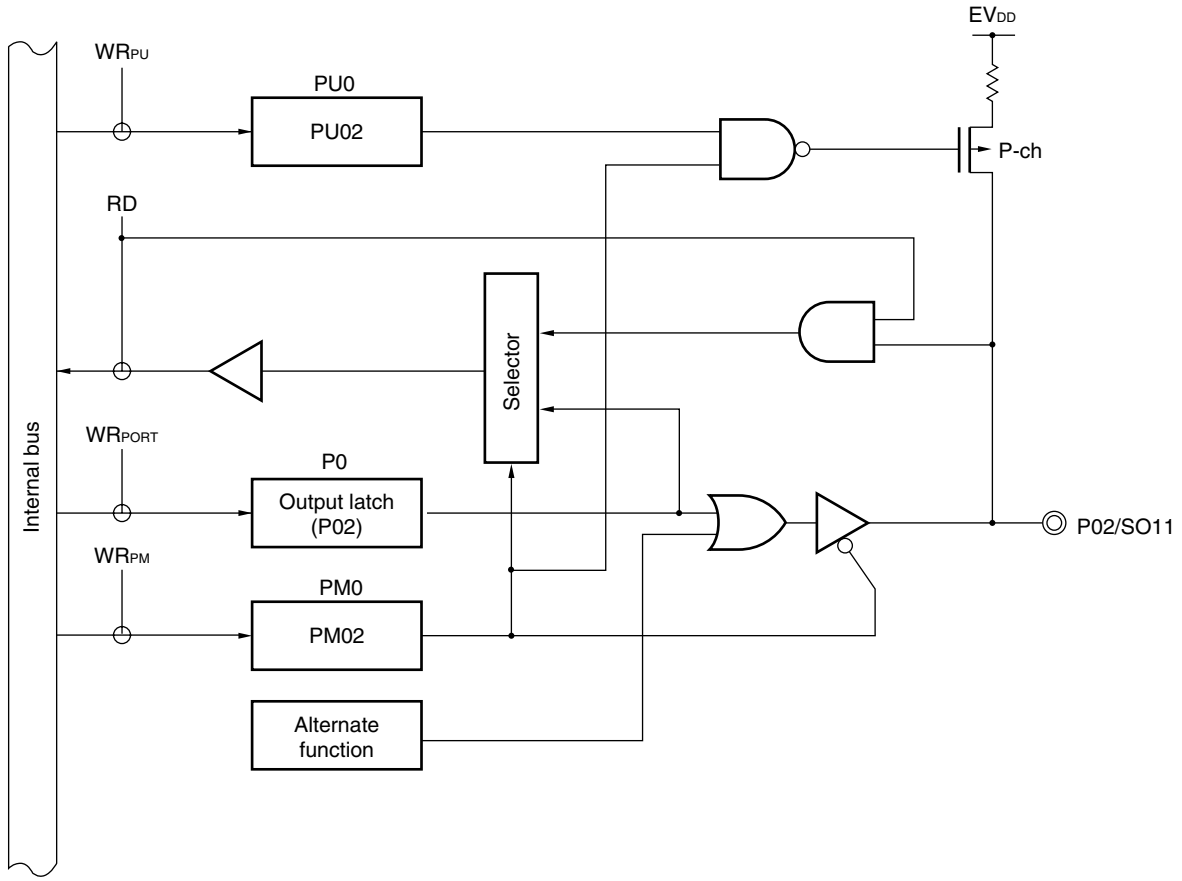

P0: Port register 0
PU0: Pull-up resistor option register 0
PM0: Port mode register 0
RD: Read signal
WR××: Write signal

Remark With products not provided with an EV_{DD} or EV_{SS} pin, replace EV_{DD} with V_{DD}, or replace EV_{SS} with V_{SS}.

Figure 5-4. Block Diagram of P03 and P05 (1/2)

(1) 78K0/KE2 products whose flash memory is less than 32 KB and 78K0/KD2

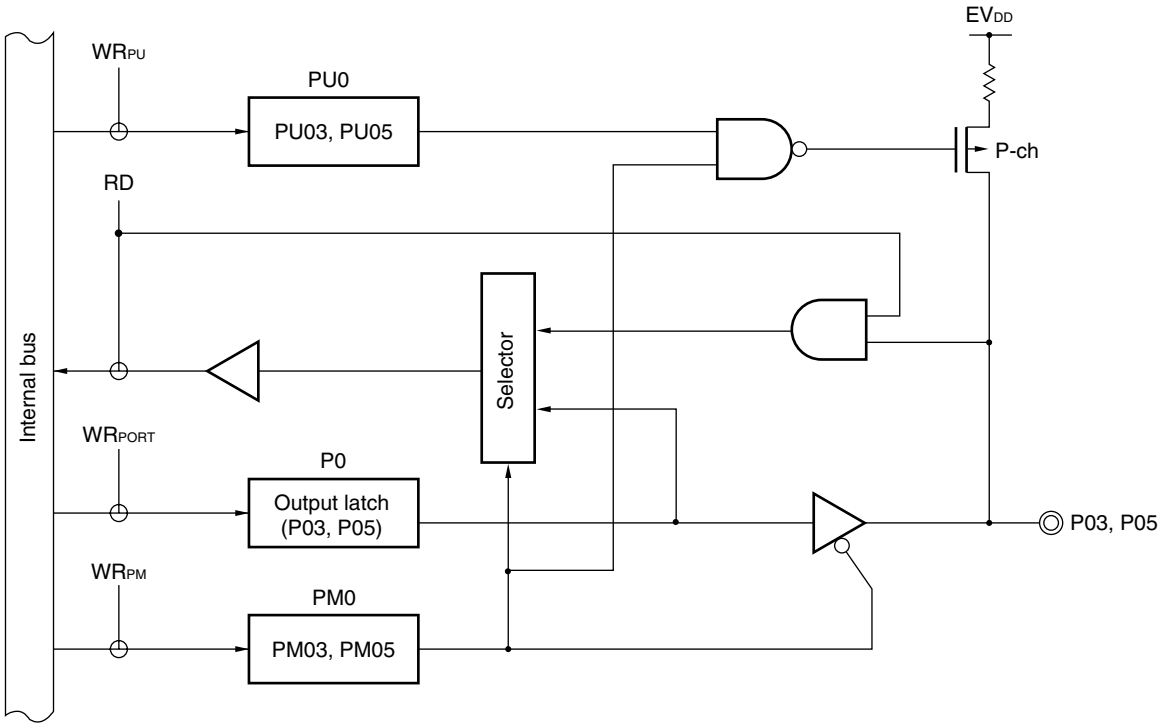

P0: Port register 0
PU0: Pull-up resistor option register 0
PM0: Port mode register 0
RD: Read signal
WR××: Write signal

Remarks 1. 78K0/KD2: P03 (not mounted with P05)
78K0/KE2 products whose flash memory is less than 32 KB: P03 and P05

2. With products not provided with an EV_{DD} or EV_{SS} pin, replace EV_{DD} with V_{DD}, or replace EV_{SS} with V_{SS}.

Figure 5-4. Block Diagram of P03 and P05 (2/2)

(2) 78K0/KE2 products whose flash memory is at least 48 KB and 78K0/KF2

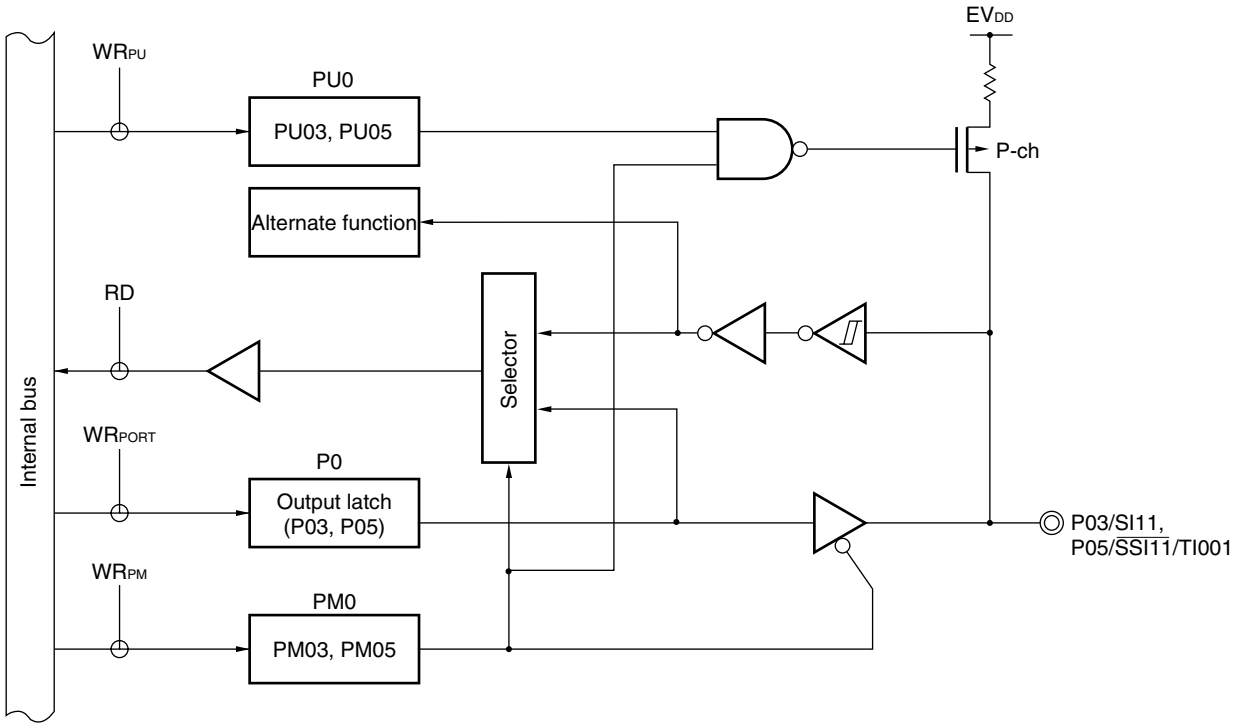

P0: Port register 0
PU0: Pull-up resistor option register 0
PM0: Port mode register 0
RD: Read signal
WR××: Write signal

Remark With products not provided with an EV_{DD} or EV_{SS} pin, replace EV_{DD} with V_{DD}, or replace EV_{SS} with V_{SS}.

Figure 5-5. Block Diagram of P04 (1/2)

(1) 78K0/KE2 products whose flash memory is less than 32 KB

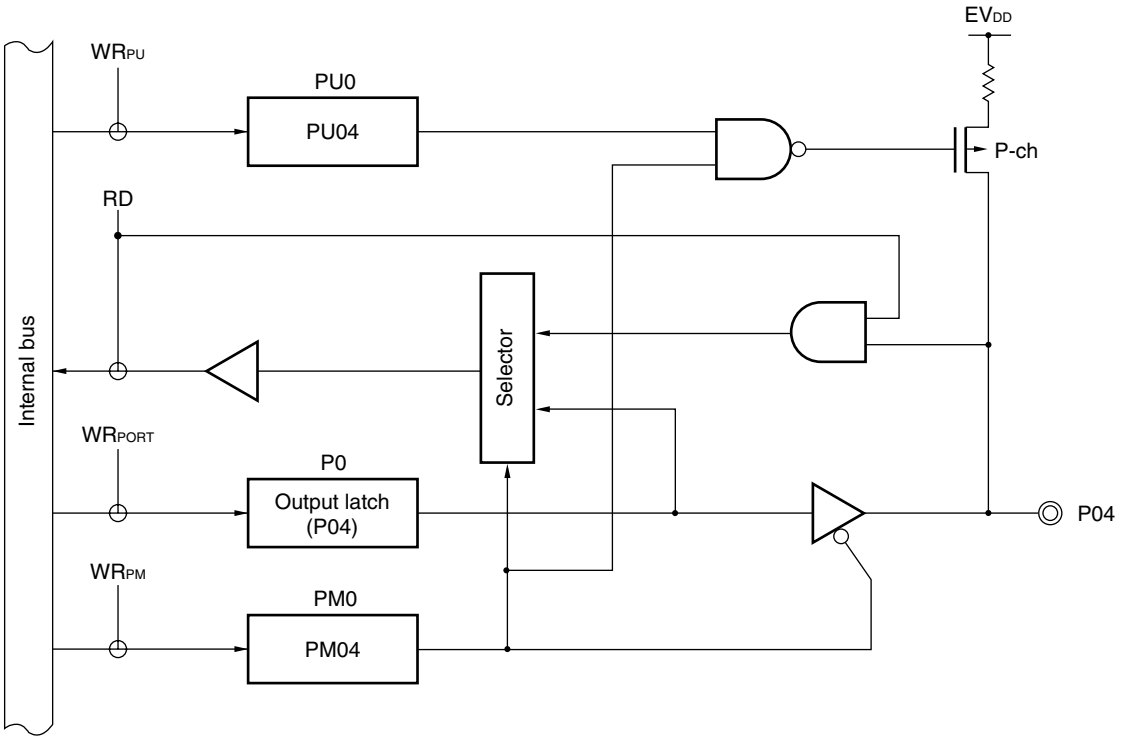

P0: Port register 0
PU0: Pull-up resistor option register 0
PM0: Port mode register 0
RD: Read signal
WR××: Write signal

Remark With products not provided with an EV_{DD} or EV_{SS} pin, replace EV_{DD} with V_{DD}, or replace EV_{SS} with V_{SS}.

Figure 5-5. Block Diagram of P04 (2/2)

(2) 78K0/KE2 products whose flash memory is at least 48 KB and 78K0/KF2

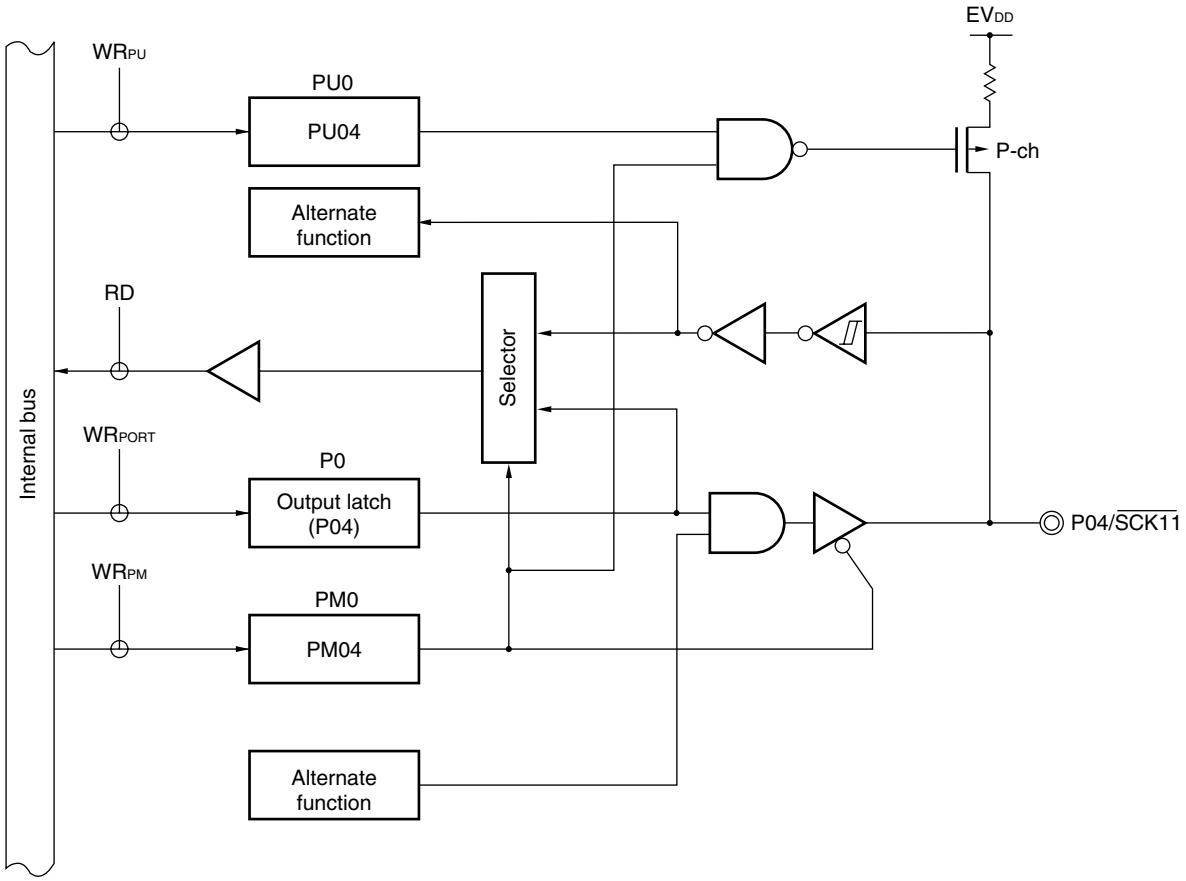

P0: Port register 0
PU0: Pull-up resistor option register 0
PM0: Port mode register 0
RD: Read signal
WR××: Write signal

Remark With products not provided with an EV_{DD} or EV_{SS} pin, replace EV_{DD} with V_{DD}, or replace EV_{SS} with V_{SS}.

Figure 5-6. Block Diagram of P06 (1/2)

(1) 78K0/KE2 products whose flash memory is less than 32 KB

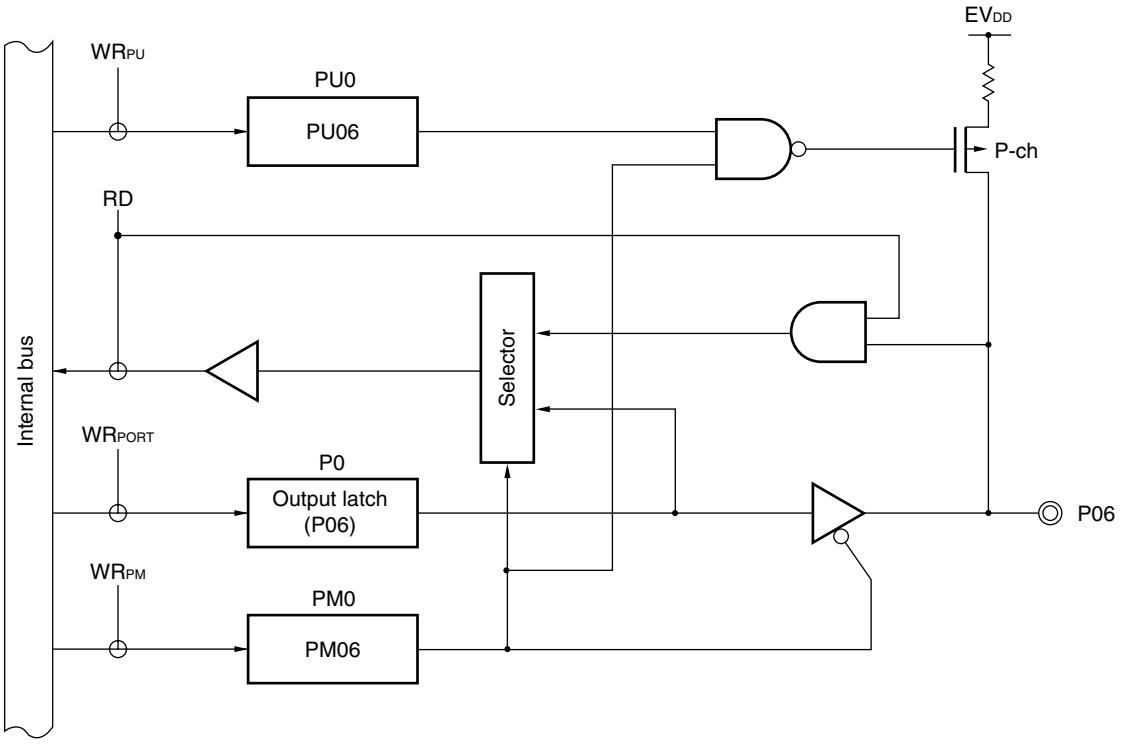

P0: Port register 0
PU0: Pull-up resistor option register 0
PM0: Port mode register 0
RD: Read signal
WR××: Write signal

Remark With products not provided with an EVDD or EVSS pin, replace EVDD with VDD, or replace EVSS with VSS.

Figure 5-6. Block Diagram of P06 (2/2)

(2) 78K0/KE2 products whose flash memory is at least 48 KB and 78K0/KF2

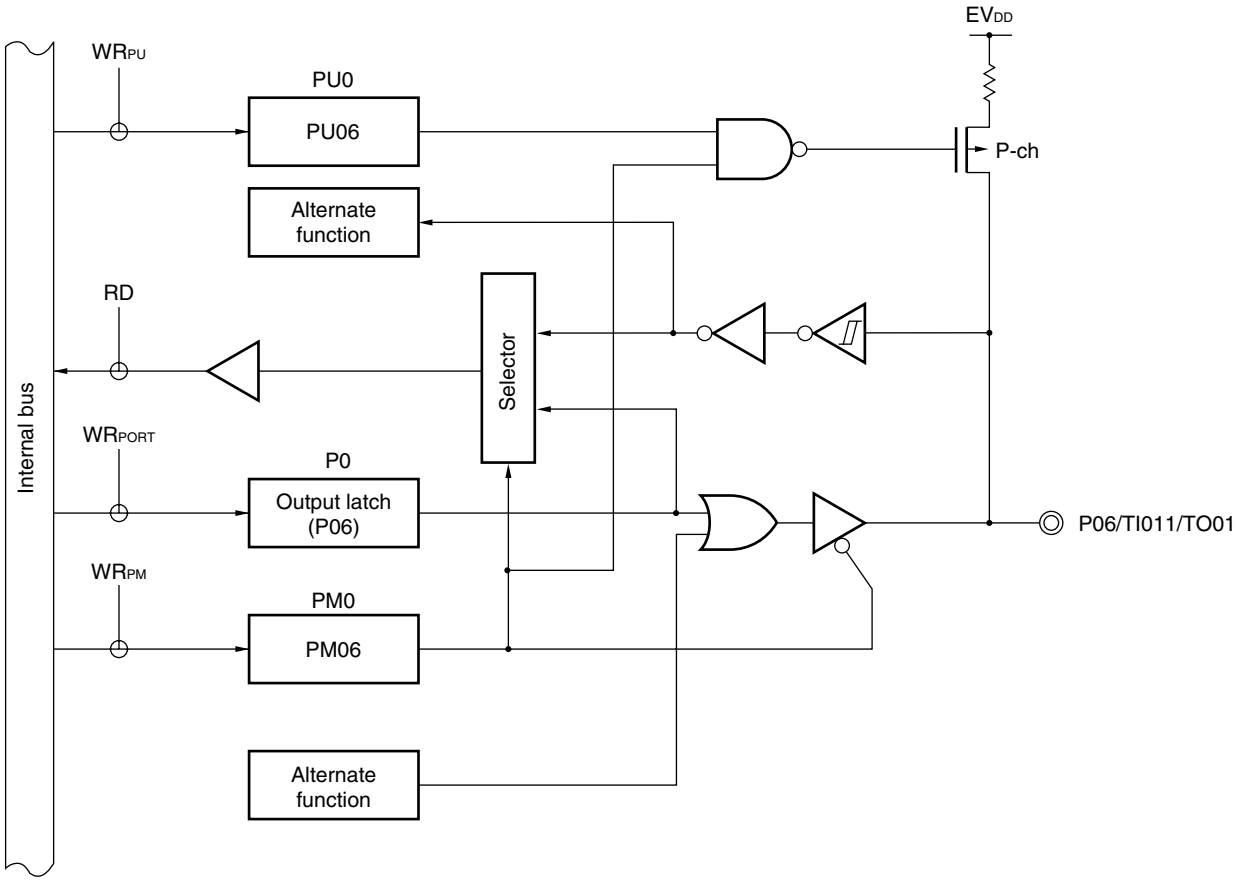

P0: Port register 0
PU0: Pull-up resistor option register 0
PM0: Port mode register 0
RD: Read signal
WR××: Write signal

Remark With products not provided with an EV_{DD} or EV_{SS} pin, replace EV_{DD} with V_{DD}, or replace EV_{SS} with V_{SS}.

5.2.2 Port 1

	78K0/KB2	78K0/KC2	78K0/KD2	78K0/KE2		78K0/KF2
				Products whose flash memory is less than 32 KB	Products whose flash memory is at least 48 KB	
P10/$\overline{\text{SCK10}}$/TxD0	√					
P11/SI10/RxD0	√					
P12/SO10	√					
P13/TxD6	√					
P14/RxD6	√					
P15/TOH0	√					
P16/TOH1/INTP5	√					
P17/TI50/TO50	√					

Remark √: Mounted

Port 1 is an I/O port with an output latch. Port 1 can be set to the input mode or output mode in 1-bit units using port mode register 1 (PM1). When the P10 to P17 pins are used as an input port, use of an on-chip pull-up resistor can be specified in 1-bit units by pull-up resistor option register 1 (PU1).

This port can also be used for external interrupt request input, serial interface data I/O, clock I/O, and timer I/O.

Reset signal generation sets port 1 to input mode.

Figures 5-7 to 5-11 show block diagrams of port 1.

Cautions 1. To use P10/$\overline{\text{SCK10}}$/TxD0 and P12/SO10 as general-purpose ports, set serial operation mode register 10 (CSIM10) and serial clock selection register 10 (CSIC10) to the default status (00H).

2. To use P13/TxD6 as general-purpose port, clear bit 0 (TXDLV6) of asynchronous serial interface control register 6 (ASICL6) to 0 (normal output of TxD6).

Figure 5-7. Block Diagram of P10

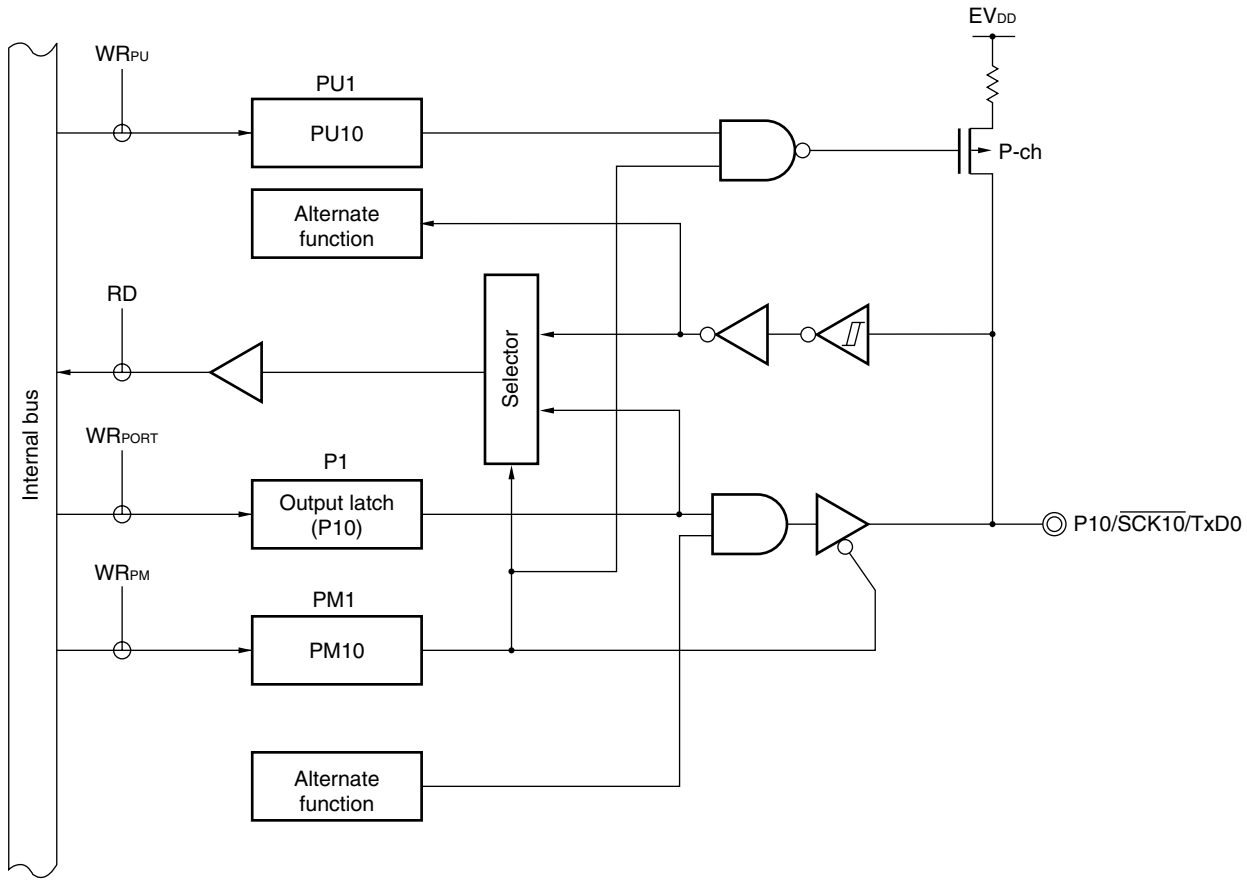

P1: Port register 1
PU1: Pull-up resistor option register 1
PM1: Port mode register 1
RD: Read signal
WR××: Write signal

Remark With products not provided with an EVDD or EVSS pin, replace EVDD with VDD, or replace EVSS with VSS.

Figure 5-8. Block Diagram of P11 and P14

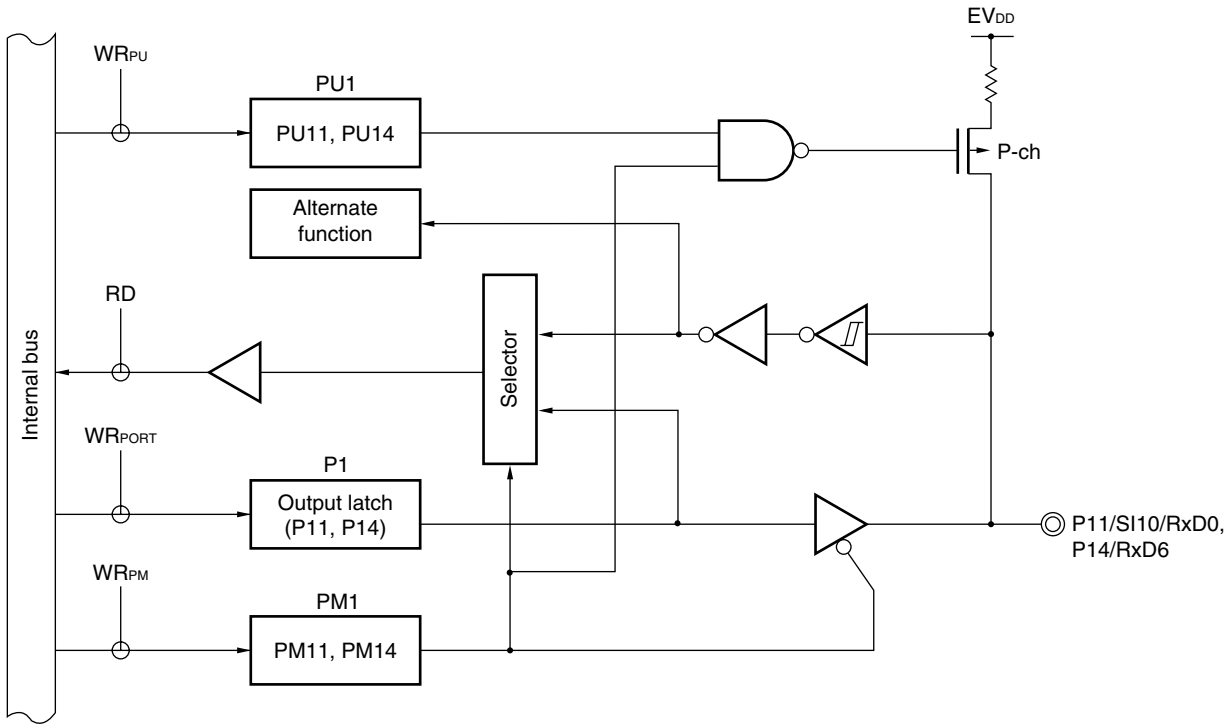

P1: Port register 1
PU1: Pull-up resistor option register 1
PM1: Port mode register 1
RD: Read signal
WR××: Write signal

Remark With products not provided with an EV_{DD} or EV_{SS} pin, replace EV_{DD} with V_{DD}, or replace EV_{SS} with V_{SS}.

Figure 5-9. Block Diagram of P12 and P15

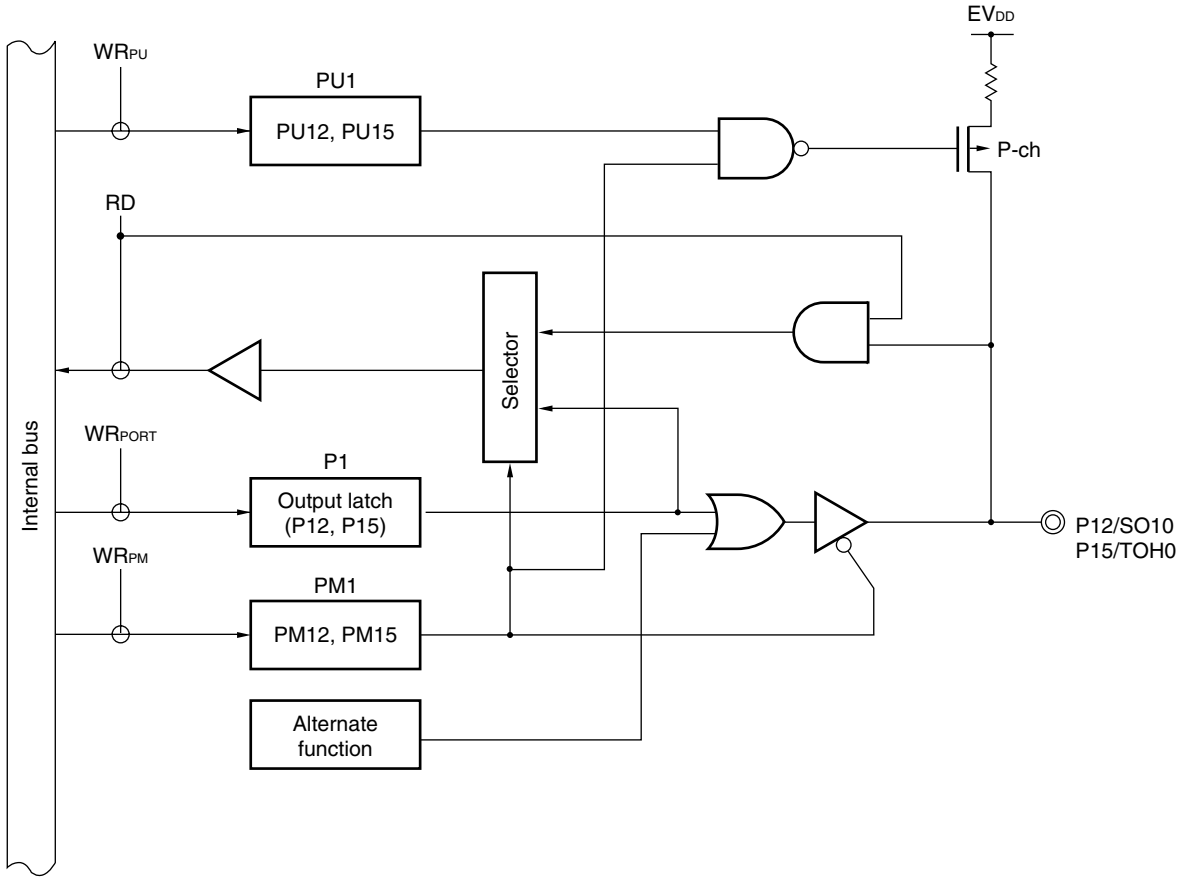

P1: Port register 1
PU1: Pull-up resistor option register 1
PM1: Port mode register 1
RD: Read signal
WR××: Write signal

Remark With products not provided with an EVDD or EVSS pin, replace EVDD with VDD, or replace EVSS with VSS.

Figure 5-10. Block Diagram of P13

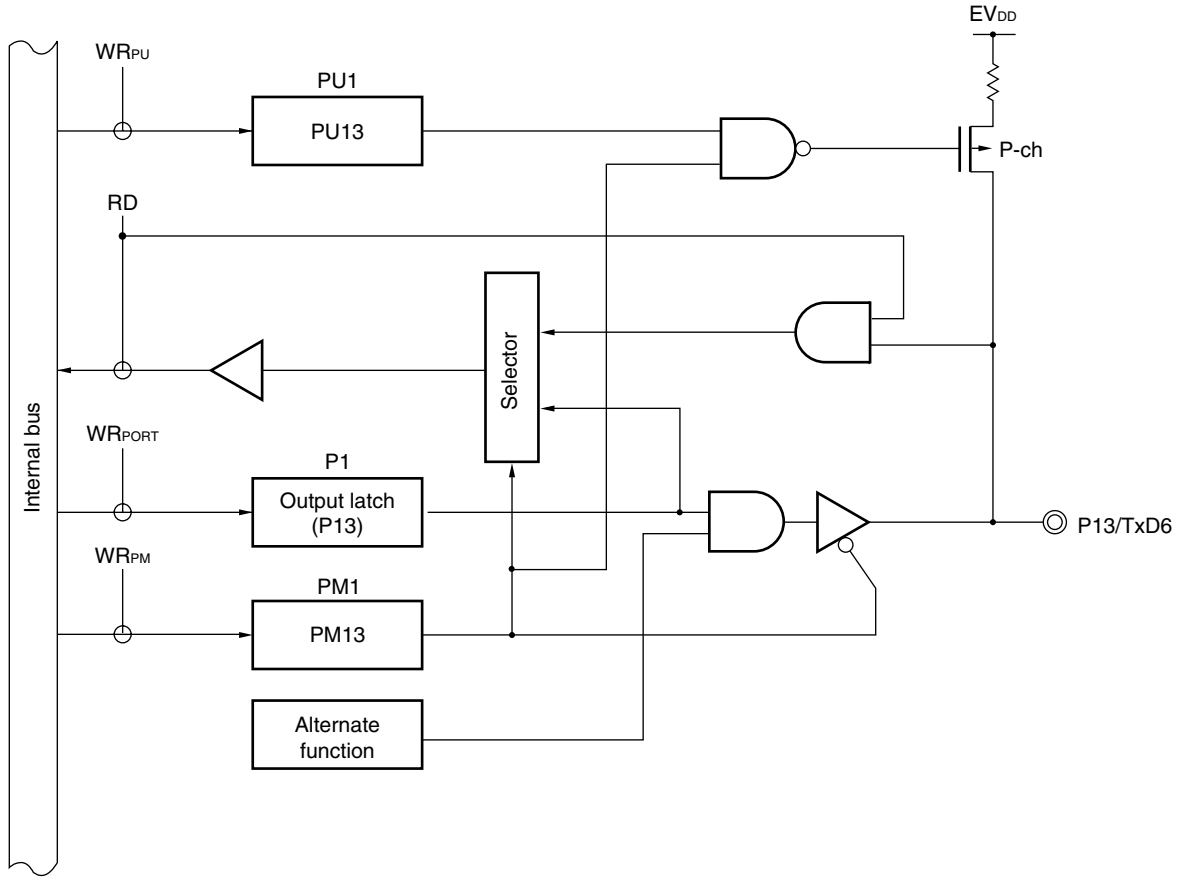

P1: Port register 1
PU1: Pull-up resistor option register 1
PM1: Port mode register 1
RD: Read signal
WR××: Write signal

Remark With products not provided with an EVDD or EVSS pin, replace EVDD with VDD, or replace EVSS with VSS.

Figure 5-11. Block Diagram of P16 and P17

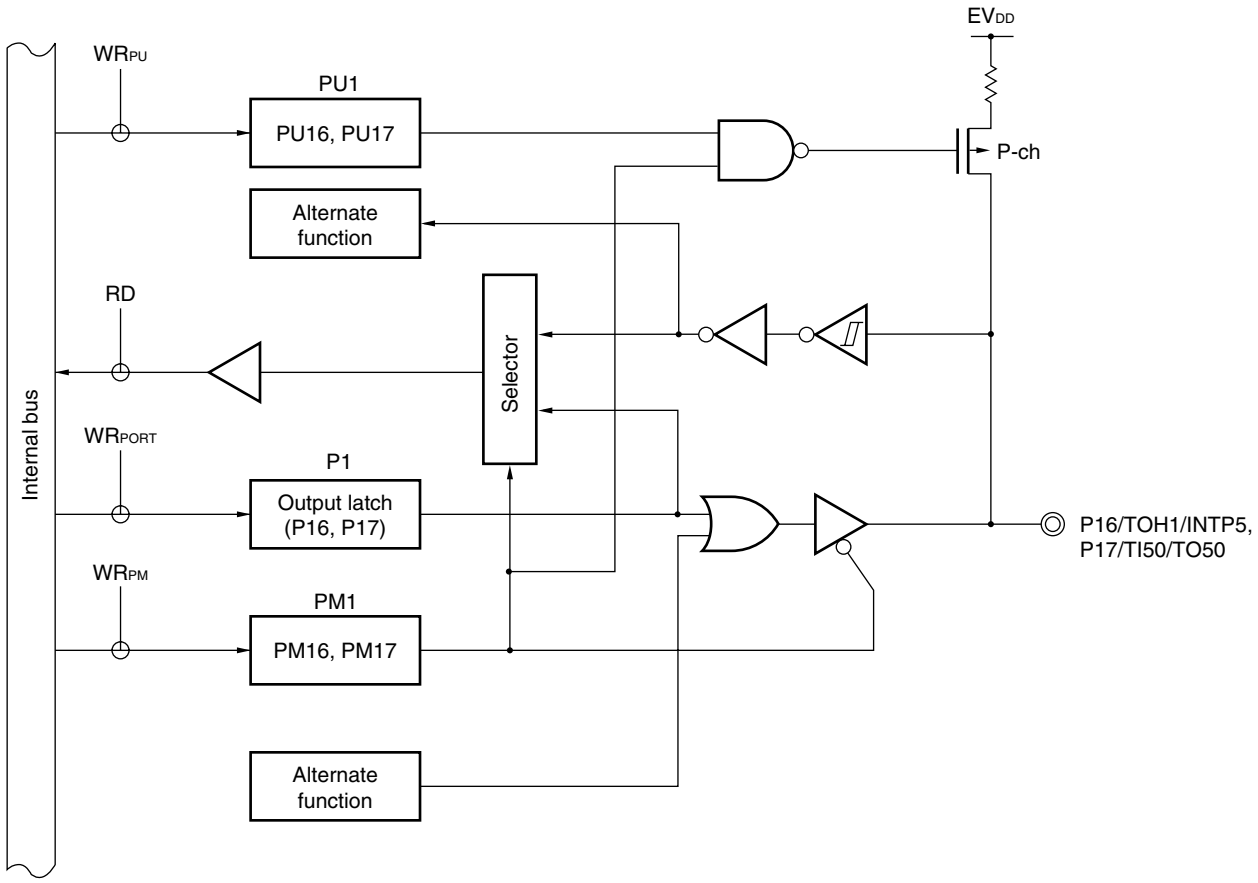

P1: Port register 1
PU1: Pull-up resistor option register 1
PM1: Port mode register 1
RD: Read signal
WR××: Write signal

Remark With products not provided with an EV_{DD} or EV_{SS} pin, replace EV_{DD} with V_{DD}, or replace EV_{SS} with V_{SS}.

5.2.3 Port 2

	78K0/KB2	78K0/KC2	78K0/KD2	78K0/KE2		78K0/KF2
				Products whose flash memory is less than 32 KB	Products whose flash memory is at least 48 KB	
P20/ANI0	√	√	√			
P21/ANI1	√	√	√			
P22/ANI2	√	√	√			
P23/ANI3	√	√	√			
P24/ANI4	–	√	√			
P25/ANI5	–	√	√			
P26/ANI6	–	√Note	√			
P27/ANI7	–	√Note	√			

Note This is not mounted onto 38-pin products of the 78K0/KC2. For the 38-pin products, be sure to set bits 6 and 7 of PM2 to “1”, and bits 6 and 7 of P2 to “0”.

Remark √: Mounted, –: Not mounted

Port 2 is an I/O port with an output latch. Port 2 can be set to the input mode or output mode in 1-bit units using port mode register 2 (PM2).

This port can also be used for A/D converter analog input.

To use P20/ANI0 to P27/ANI7 as digital input pins, set them in the digital I/O mode by using the A/D port configuration register (ADPC) and in the input mode by using PM2. Use these pins starting from the lower bit.

To use P20/ANI0 to P27/ANI7 as digital output pins, set them in the digital I/O mode by using ADPC and in the output mode by using PM2.

Table 5-5. Setting Functions of P20/ANI0 to P27/ANI7 Pins

ADPC	PM2	ADS	P20/ANI0 to P27/ANI7 Pin
Digital I/O selection	Input mode	–	Digital input
	Output mode	–	Digital output
Analog input selection	Input mode	Selects ANI.	Analog input (to be converted)
		Does not select ANI.	Analog input (not to be converted)
	Output mode	Selects ANI.	Setting prohibited
		Does not select ANI.	

All P20/ANI0 to P27/ANI7 are set in the analog input mode when the reset signal is generated.

Figure 5-12 shows a block diagram of port 2.

Caution Make the AV_{REF} pin the same potential as the V_{DD} pin when port 2 is used as a digital port.

Figure 5-12. Block Diagram of P20 to P27

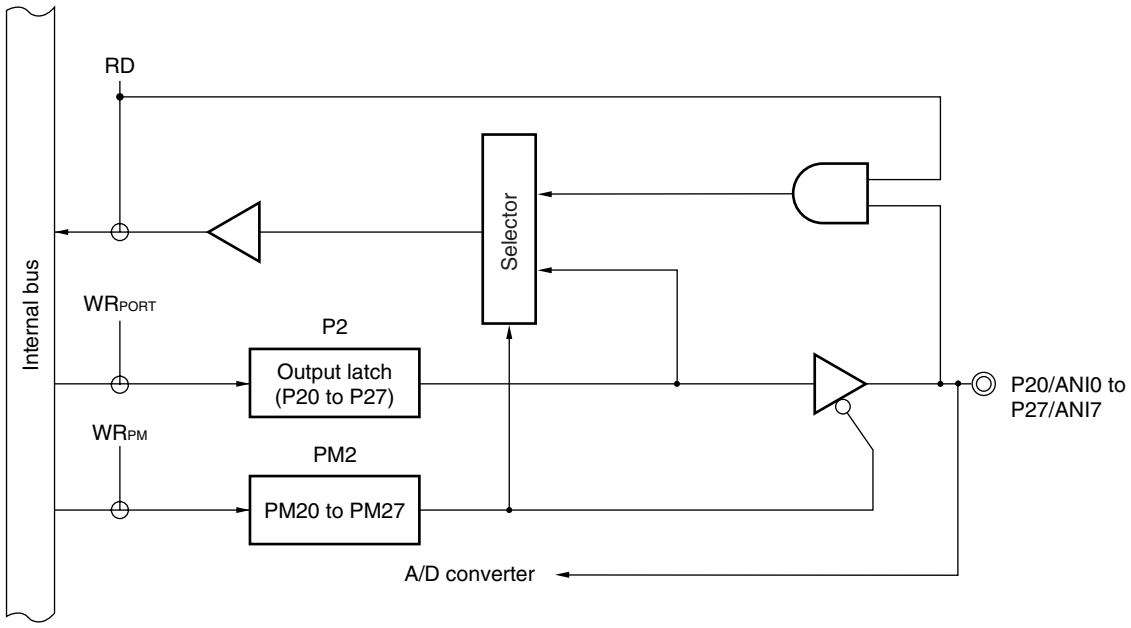

P2: Port register 2
PM2: Port mode register 2
RD: Read signal
WR××: Write signal

Caution For the 38-pin products of 78K0/KC2, be sure to set bits 6 and 7 of PM2 to "1", and bits 6 and 7 of P2 to "0".

5.2.4 Port 3

	78K0/KB2	78K0/KC2	78K0/KD2	78K0/KE2		78K0/KF2
				Products whose flash memory is less than 32 KB	Products whose flash memory is at least 48 KB	
P30/INTP1	√					
P31/INTP2/OCD1A[Note]	√					
P32/INTP3/OCD1B[Note]	√					
P33/INTP4/TI51/TO51	√					

Note OCD1A and OCD1B are provided to the products with an on-chip debug function (μPD78F05xxD and 78F05xxDA) only.

Remark √: Mounted

Port 3 is an I/O port with an output latch. Port 3 can be set to the input mode or output mode in 1-bit units using port mode register 3 (PM3). When the P30 to P33 pins are used as an input port, use of an on-chip pull-up resistor can be specified in 1-bit units by pull-up resistor option register 3 (PU3).

This port can also be used for external interrupt request input and timer I/O.

Reset signal generation sets port 3 to input mode.

Figures 5-13 and 5-14 show block diagrams of port 3.

Cautions 1. In the product with an on-chip debug function (μP78F05xxD and D78F05xxDA), be sure to pull the P31/INTP2/OCD1A pin down before a reset release, to prevent malfunction.

2. Process the P31/INTP2/OCD1A pin of the products mounted with the on-chip debug function (μPD78F05xxD and 78F05xxDA) as follows, when it is not used when it is connected to a flash memory programmer or an on-chip debug emulator.

		P31/INTP2/OCD1A
Flash memory programmer connection		Connect to EV_{SS}[Note] via a resistor.
On-chip debug emulator connection (when it is not used as an on-chip debug mode setting pin)	During reset	
	During reset released	Input: Connect to EV_{DD}[Note] or EV_{SS}[Note] via a resistor. Output: Leave open.

Note With products without an EV_{SS} pin, connect them to V_{SS}. With products without an EV_{DD} pin, connect them to V_{DD}.

Remark P31 and P32 of the product with an on-chip debug function (μPD78F05xxD and 78F05xxDA) can be used as on-chip debug mode setting pins (OCD1A, OCD1B) when the on-chip debug function is used. For how to connect an on-chip debug emulator (QB-MINI2), see **CHAPTER 28 ON-CHIP DEBUG FUNCTION (μPD78F05xxD AND 78F05xxDA ONLY).**

Figure 5-13. Block Diagram of P30 to P32

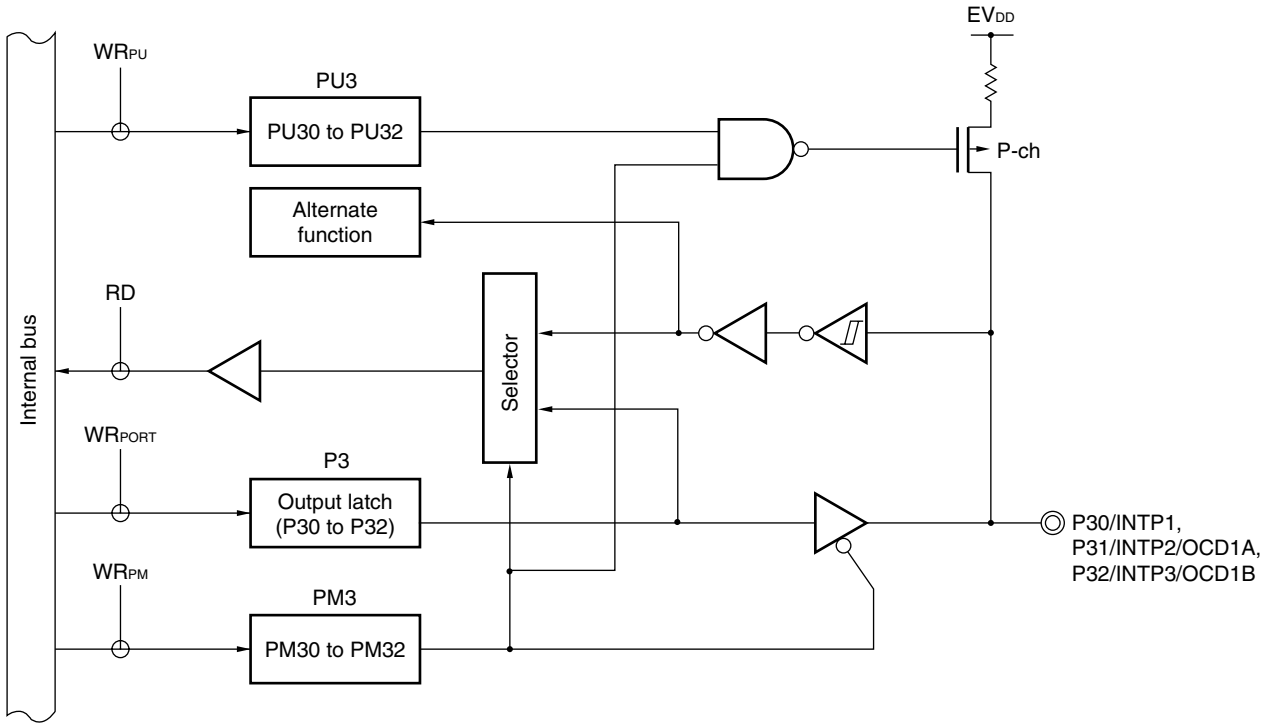

P3: Port register 3
PU3: Pull-up resistor option register 3
PM3: Port mode register 3
RD: Read signal
WR××: Write signal

Remark With products not provided with an EV_{DD} or EV_{SS} pin, replace EV_{DD} with V_{DD}, or replace EV_{SS} with V_{SS}.

Figure 5-14. Block Diagram of P33

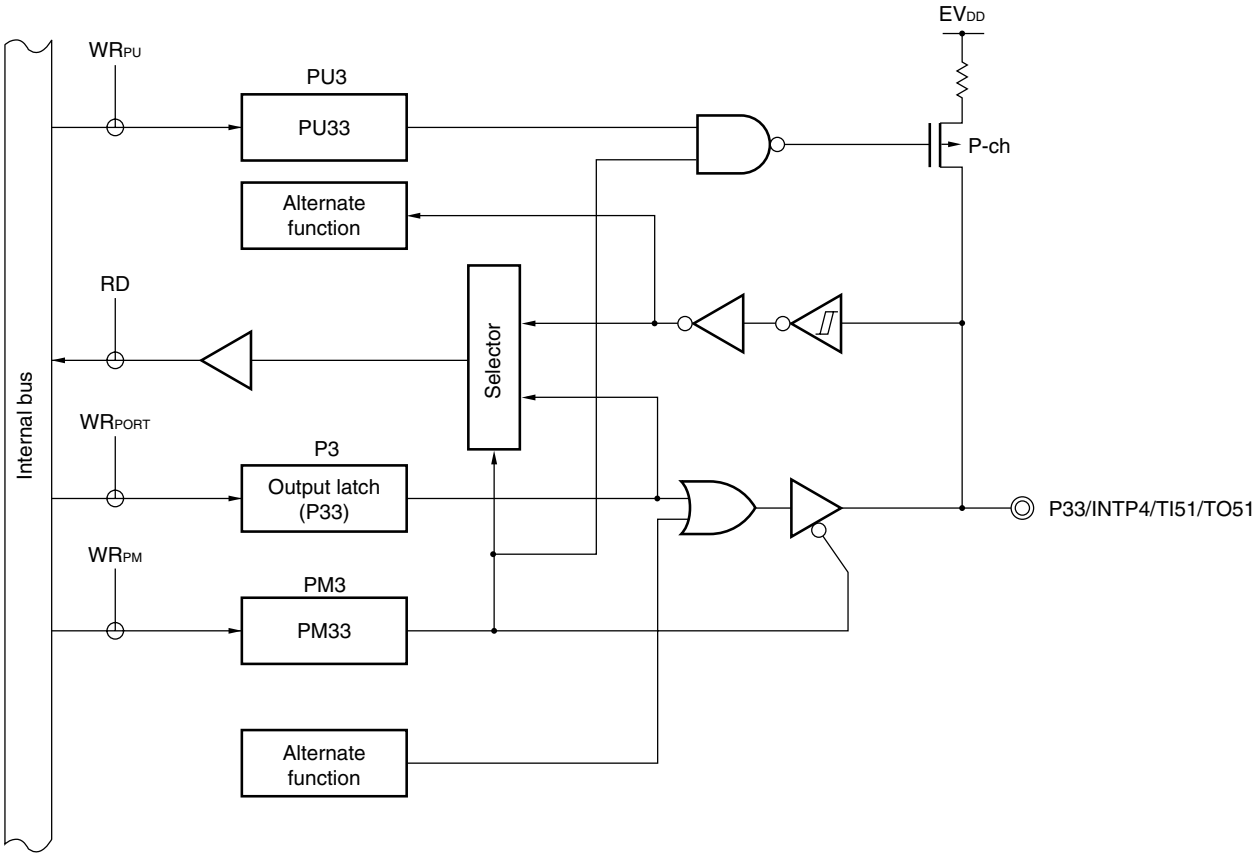

P3: Port register 3
PU3: Pull-up resistor option register 3
PM3: Port mode register 3
RD: Read signal
WR××: Write signal

Remark With products not provided with an EV_{DD} or EV_{SS} pin, replace EV_{DD} with V_{DD}, or replace EV_{SS} with V_{SS}.

5.2.5 Port 4

	78K0/KB2	78K0/KC2	78K0/KD2	78K0/KE2		78K0/KF2
				Products whose flash memory is less than 32 KB	Products whose flash memory is at least 48 KB	
P40	–	√Note	√	√		√
P41	–	√Note	√	√		√
P42	–	–		√		√
P43	–	–		√		√
P44	–	–		–		√
P45	–	–		–		√
P46	–	–		–		√
P47	–	–		–		√

Note This is not mounted onto 38-pin products of the 78K0/KC2. For the 38-pin products, be sure to set bits 0 and 1 of PM4 and P4 to “0”.

Remark √: Mounted, –: Not mounted

Port 4 is an I/O port with an output latch. Port 4 can be set to the input mode or output mode in 1-bit units using port mode register 4 (PM4). When the P40 to P47 pins are used as an input port, use of an on-chip pull-up resistor can be specified in 1-bit units by pull-up resistor option register 4 (PU4).

Reset signal generation sets port 4 to input mode.

Figure 5-15 shows a block diagram of port 4.

Figure 5-15. Block Diagram of P40 to P47

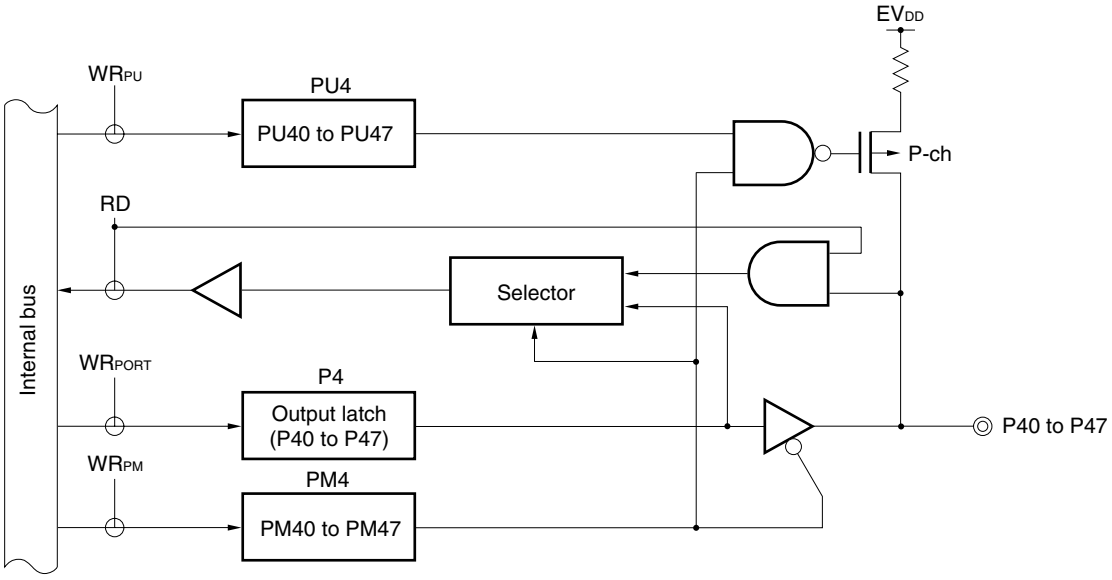

P4: Port register 4
PU4: Pull-up resistor option register 4
PM4: Port mode register 4
RD: Read signal
WR××: Write signal

Caution For the 38-pin products of 78K0/KC2, be sure to set bits 0 and 1 of PM4 and P4 to "0".

Remark With products not provided with an EV_{DD} or EV_{SS} pin, replace EV_{DD} with V_{DD}, or replace EV_{SS} with V_{SS}.

5.2.6 Port 5

	78K0/KB2	78K0/KC2	78K0/KD2	78K0/KE2		78K0/KF2
				Products whose flash memory is less than 32 KB	Products whose flash memory is at least 48 KB	
P50	–			√		√
P51	–			√		√
P52	–			√		√
P53	–			√		√
P54	–			–		√
P55	–			–		√
P56	–			–		√
P57	–			–		√

Remark √: Mounted, –: Not mounted

Port 5 is an I/O port with an output latch. Port 5 can be set to the input mode or output mode in 1-bit units using port mode register 5 (PM5). When the P50 to P57 pins are used as an input port, use of an on-chip pull-up resistor can be specified in 1-bit units by pull-up resistor option register 5 (PU5).

Reset signal generation sets port 5 to input mode.

Figure 5-16 shows a block diagram of port 5.

Figure 5-16. Block Diagram of P50 to P57

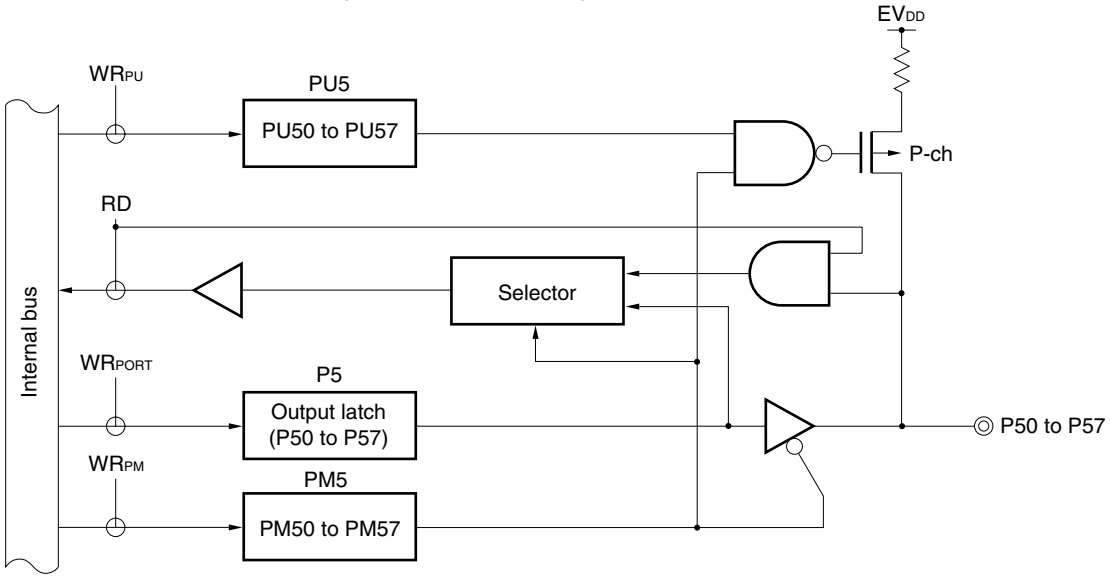

P5: Port register 5
PU5: Pull-up resistor option register 5
PM5: Port mode register 5
RD: Read signal
WR××: Write signal

Remark With products not provided with an EV_{DD} or EV_{SS} pin, replace EV_{DD} with V_{DD}, or replace EV_{SS} with V_{SS}.

5.2.7 Port 6

	78K0/KB2	78K0/KC2	78K0/KD2	78K0/KE2		78K0/KF2
				Products whose flash memory is less than 32 KB	Products whose flash memory is at least 48 KB	
P60/SCL0	√	√				√
P61/SDA0	√	√				√
P62/EXSCL0	–	√				√
P63	–	√				√
P64	–	–				√
P65	–	–				√
P66	–	–				√
P67	–	–				√

Remark √: Mounted, –: Not mounted

Port 6 is an I/O port with an output latch. Port 6 can be set to the input mode or output mode in 1-bit units using port mode register 6 (PM6). When the P64 to P67 pins are used as an input port, use of an on-chip pull-up resistor can be specified in 1-bit units by pull-up resistor option register 6 (PU6).

The output of the P60 to P63 pins is N-ch open-drain output (6 V tolerance).

This port can also be used for serial interface data I/O, clock I/O, and external clock input.

Reset signal generation sets port 6 to input mode.

Figures 5-17 to 5-20 show block diagrams of port 6.

Remark When using P62/EXSCL0 as an external clock input pin of the serial interface, input a clock of 6.4 MHz to it.

Figure 5-17. Block Diagram of P60 and P61

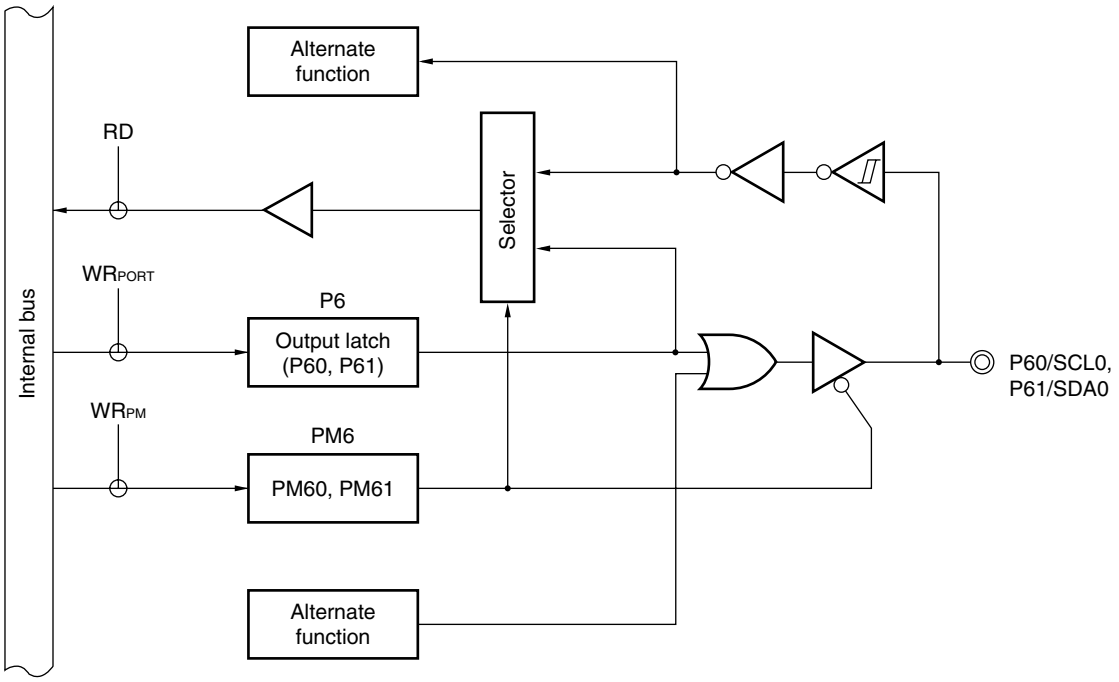

P6: Port register 6
PM6: Port mode register 6
RD: Read signal
WR××: Write signal

Caution A through current flows through P60 and P61 if an intermediate potential is input to these pins, because the input buffer is also turned on when P60 and P61 are in output mode. Consequently, do not input an intermediate potential when P60 and P61 are in output mode.

Figure 5-18. Block Diagram of P62

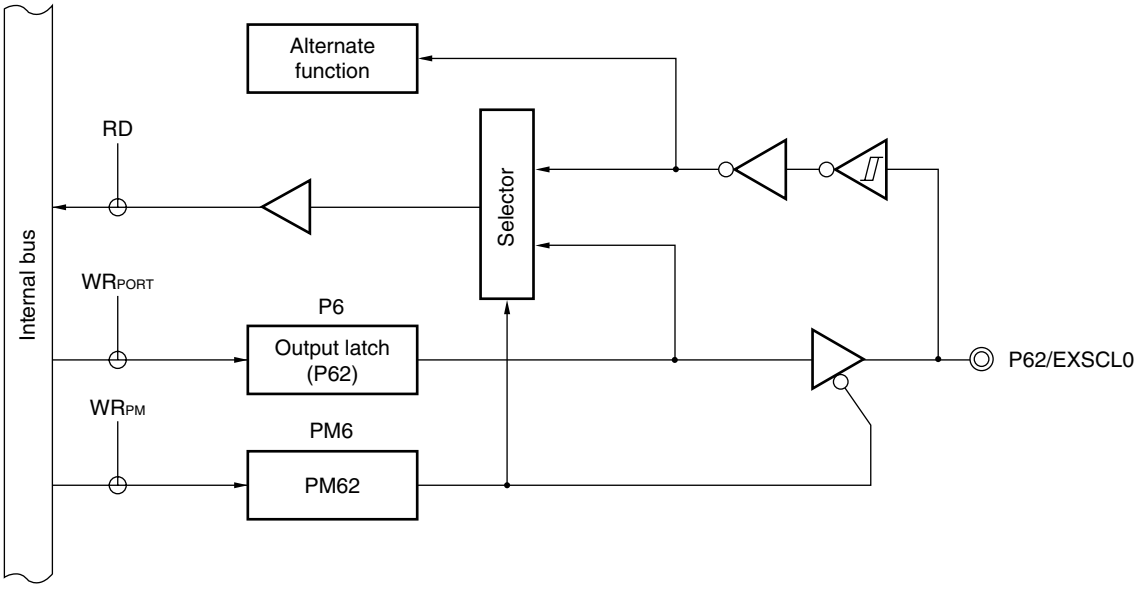

P6: Port register 6
PM6: Port mode register 6
RD: Read signal
WR××: Write signal

Caution A through current flows through P62 if an intermediate potential is input to this pin, because the input buffer is also turned on when P62 is in output mode. Consequently, do not input an intermediate potential when P62 is in output mode.

Figure 5-19. Block Diagram of P63

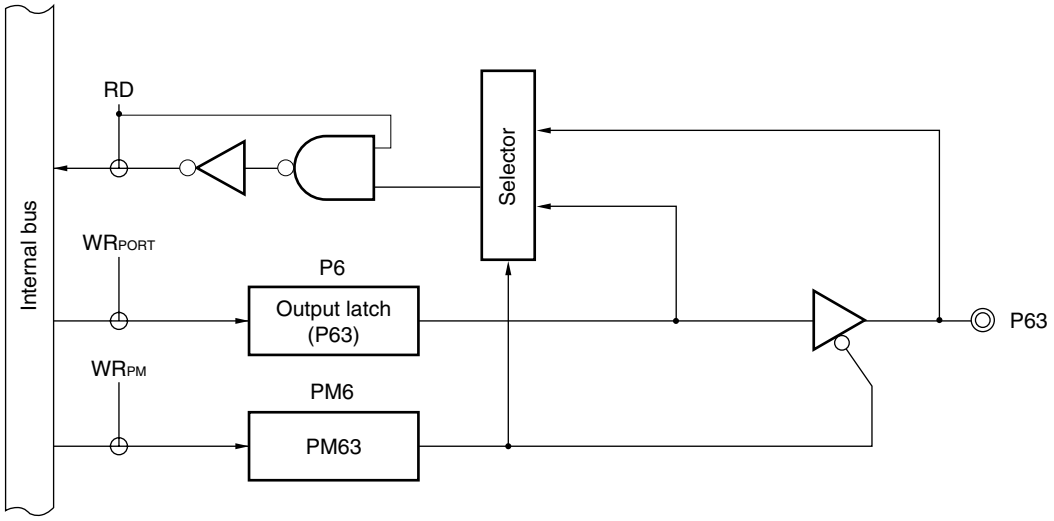

P6: Port register 6
PM6: Port mode register 6
RD: Read signal
WR××: Write signal

Figure 5-20. Block Diagram of P64 to P67

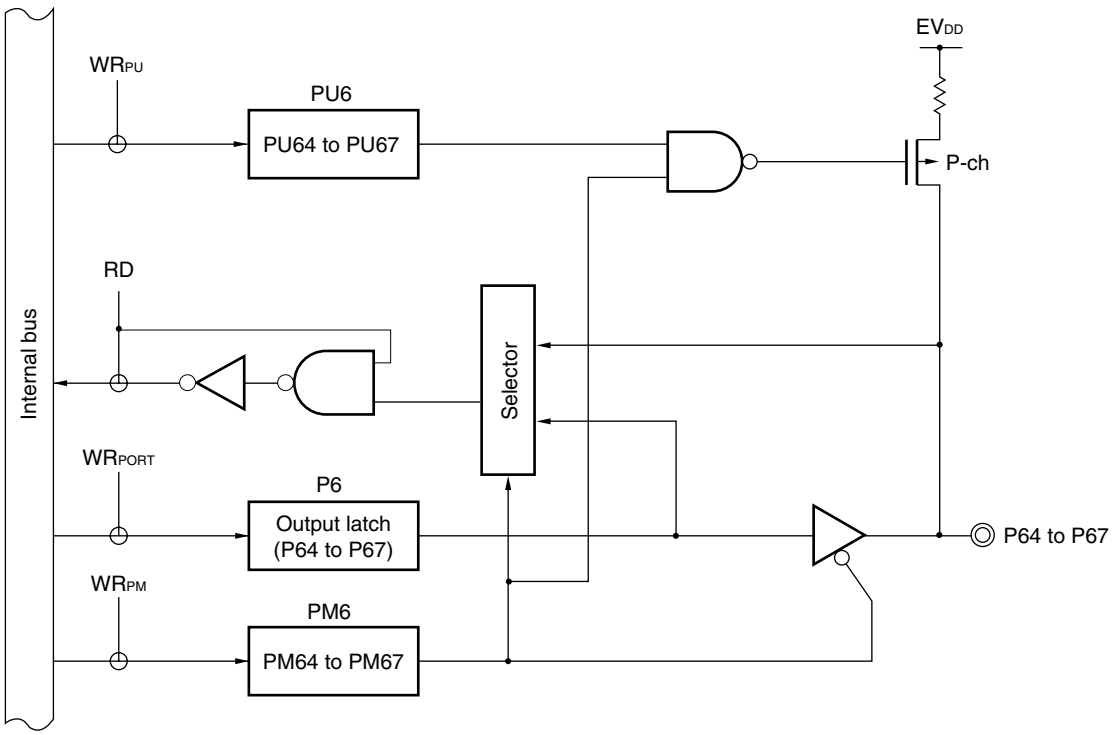

P6: Port register 6
PM6: Port mode register 6
RD: Read signal
WR××: Write signal

Remark With products not provided with an EVDD or EVSS pin, replace EVDD with VDD, or replace EVSS with VSS.

5.2.8 Port 7

	78K0/KB2	78K0/KC2	78K0/KD2	78K0/KE2		78K0/KF2
				Products whose flash memory is less than 32 KB	Products whose flash memory is at least 48 KB	
P70/KR0	–	√	√			
P71/KR1	–	√	√			
P72/KR2	–	√Note 1	√			
P73/KR3	–	√Note 1	√			
P74/KR4	–	P74Note 2	√			
P75/KR5	–	P75Note 2	√			
P76/KR6	–	–	√			
P77/KR7	–	–	√			

Notes 1. This is not mounted onto 38-pin products of the 78K0/KC2. For the 38-pin products, be sure to set bits 2 and 3 of PM7 and P7 to "0".

2. This is not mounted onto 38-pin and 44-pin products of the 78K0/KC2. The 48-pin products are only provided with port functions and not alternate functions.

Remark √: Mounted, –: Not mounted

Port 7 is an I/O port with an output latch. Port 7 can be set to the input mode or output mode in 1-bit units using port mode register 7 (PM7). When the P70 to P77 pins are used as an input port, use of an on-chip pull-up resistor can be specified in 1-bit units by pull-up resistor option register 7 (PU7).

This port can also be used for key return input.

Reset signal generation sets port 7 to input mode.

Figure 5-21 shows a block diagram of port 7.

Figure 5-21. Block Diagram of P70 to P77

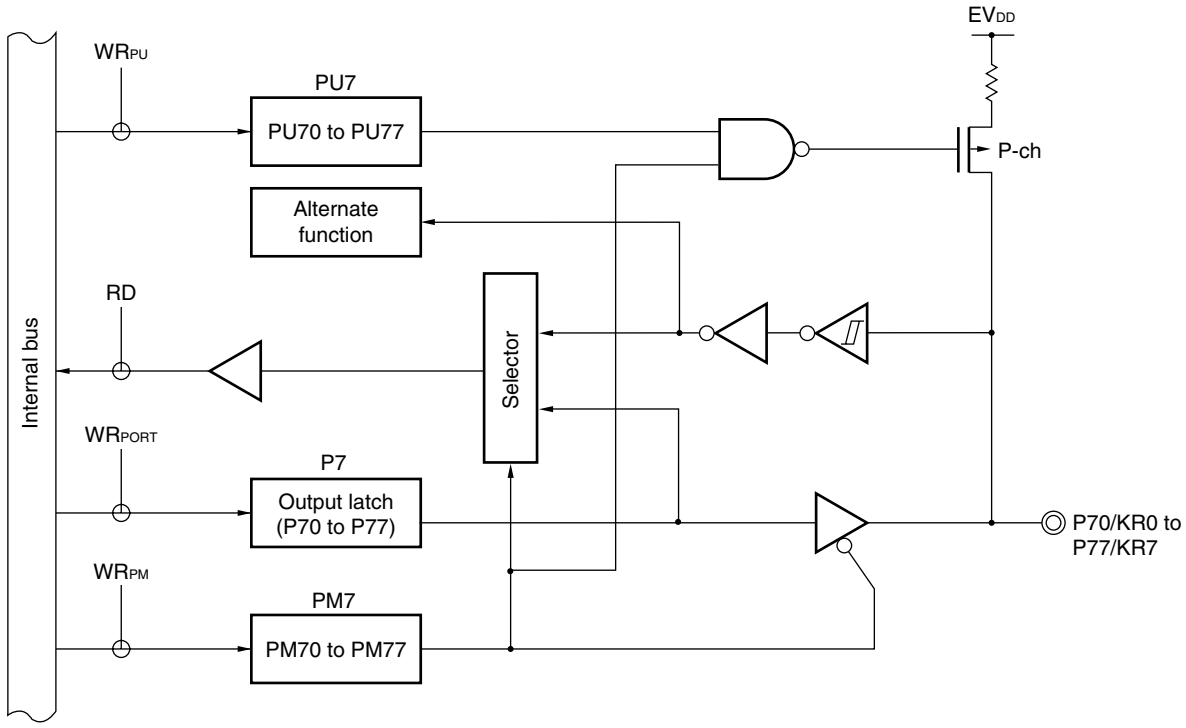

P7: Port register 7
PU7: Pull-up resistor option register 7
PM7: Port mode register 7
RD: Read signal
WR××: Write signal

Caution For the 38-pin products of 78K0/KC2, be sure to set bits 2 and 3 of PM7 and P7 to "0".

Remark With products not provided with an EV_{DD} or EV_{SS} pin, replace EV_{DD} with V_{DD}, or replace EV_{SS} with V_{SS}.

5.2.9 Port 12

	78K0/KB2	78K0/KC2	78K0/KD2	78K0/KE2		78K0/KF2
				Products whose flash memory is less than 32 KB	Products whose flash memory is at least 48 KB	
P120/INTP0/EXLVI	√	√				
P121/X1/OCD0A[Note]	√	√				
P122/X2/EXCLK/ OCD0B[Note]	√	√				
P123/XT1	–	√				
P124/XT2/EXCLKS	–	√				

Note OCD0A and OCD0B are provided to the products with an on-chip debug function (μPD78F05xxD and 78F05xxDA) only.

Remark √: Mounted, –: Not mounted

Port 12 is an I/O port with an output latch. Port 12 can be set to the input mode or output mode in 1-bit units using port mode register 12 (PM12). When used as an input port only for P120, use of an on-chip pull-up resistor can be specified by pull-up resistor option register 12 (PU12).

This port can also be used as pins for external interrupt request input, potential input for external low-voltage detection, connecting resonator for main system clock, connecting resonator for subsystem clock, external clock input for main system clock, and external clock input for subsystem clock.

Reset signal generation sets port 12 to input mode.

Figures 5-22 and 5-23 show block diagrams of port 12.

Caution 1. When using the P121 to P124 pins to connect a resonator for the main system clock (X1, X2) or subsystem clock (XT1, XT2), or to input an external clock for the main system clock (EXCLK) or subsystem clock (EXCLKS), the X1 oscillation mode, XT1 oscillation mode, or external clock input mode must be set by using the clock operation mode select register (OSCCTL) (for details, see 6.3 (1) Clock operation mode select register (OSCCTL) and (3) Setting of operation mode for subsystem clock pin). The reset value of OSCCTL is 00H (all of the P121 to P124 pins are I/O port pins). At this time, setting of the PM121 to PM124 and P121 to P124 pins is not necessary.

Caution 2. Process the P121/X1/OCD0A pin of the products mounted with the on-chip debug function (μPD78F05xxD and 78F05xxDA) as follows, when it is not used when it is connected to a flash memory programmer or an on-chip debug emulator.

		P121/X1/OCD0A
Flash memory programmer connection		Connect to V_{SS} via a resistor.
On-chip debug emulator connection (when it is not used as an on-chip debug mode setting pin)	During reset	
	During reset released	Input: Connect to V_{DD} or V_{SS} via a resistor. Output: Leave open.

Remark X1 and X2 of the product with an on-chip debug function (μPD78F05xxD and 78F05xxDA) can be used as on-chip debug mode setting pins (OCD0A, OCD0B) when the on-chip debug function is used. For how to connect an on-chip debug emulator (QB-MINI2), see **CHAPTER 28 ON-CHIP DEBUG FUNCTION (μPD78F05xxD AND 78F05xxDA ONLY).**

Figure 5-22. Block Diagram of P120

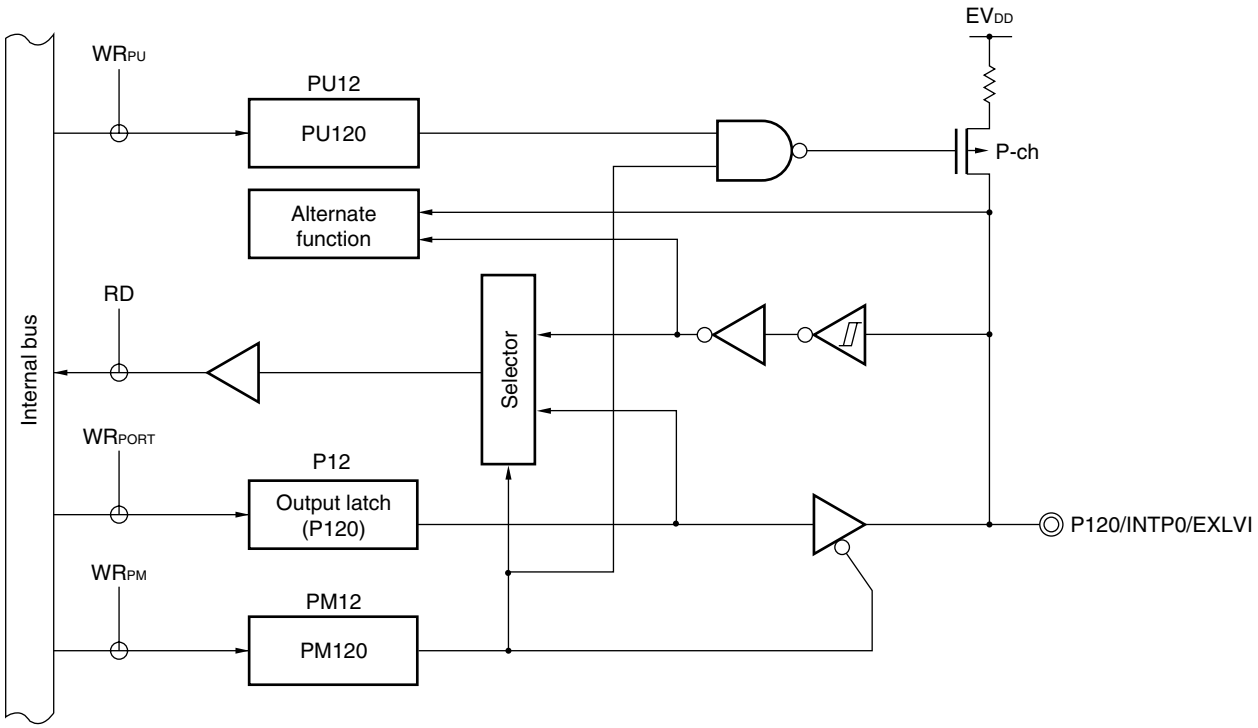

P12: Port register 12
PU12: Pull-up resistor option register 12
PM12: Port mode register 12
RD: Read signal
WR××: Write signal

Remark With products not provided with an EV_{DD} or EV_{SS} pin, replace EV_{DD} with V_{DD}, or replace EV_{SS} with V_{SS}.

Figure 5-23. Block Diagram of P121 to P124

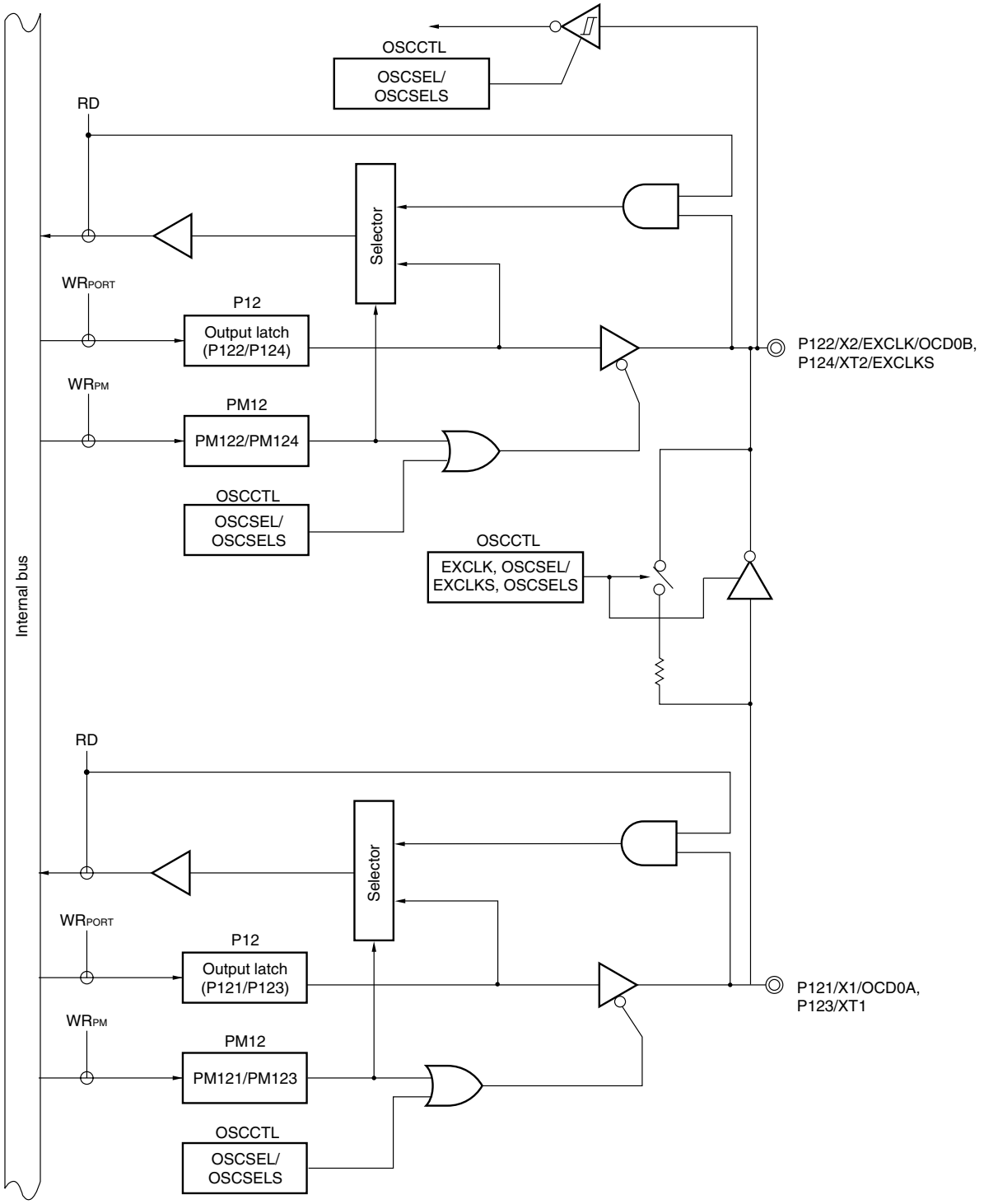

P12: Port register 12
PU12: Pull-up resistor option register 12
PM12: Port mode register 12
OSCCTL: Clock operation mode select register
RD: Read signal
WR××: Write signal

5.2.10 Port 13

	78K0/KB2	78K0/KC2	78K0/KD2	78K0/KE2		78K0/KF2
				Products whose flash memory is less than 32 KB	Products whose flash memory is at least 48 KB	
P130	–	√Note	√			

Note This is not mounted onto 38-pin and 44-pin products of the 78K0/KC2.

Remark √: Mounted, –: Not mounted

Port 13 is an output-only port.

Figure 5-24 shows a block diagram of port 13.

Figure 5-24. Block Diagram of P130

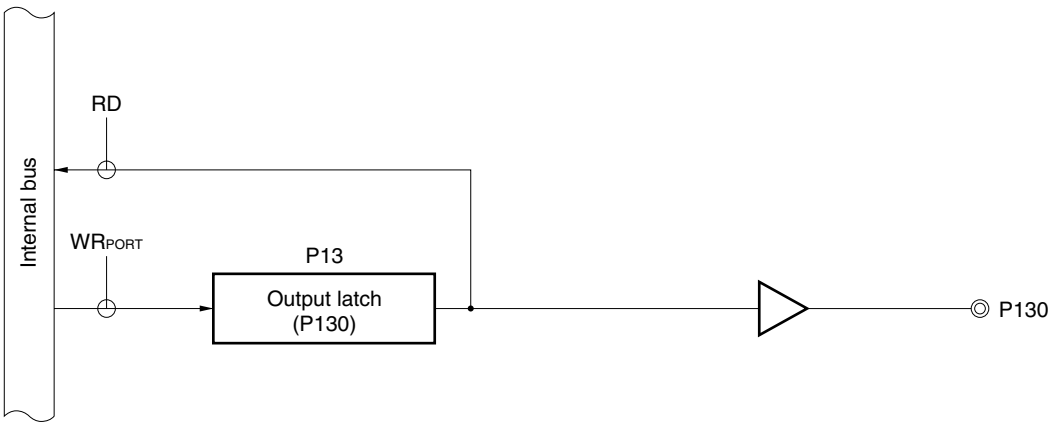

P13: Port register 13
RD: Read signal
WR××: Write signal

Remark When reset is effected, P130 outputs a low level. If P130 is set to output a high level before reset is effected, the output signal of P130 can be dummy-output as the CPU reset signal.

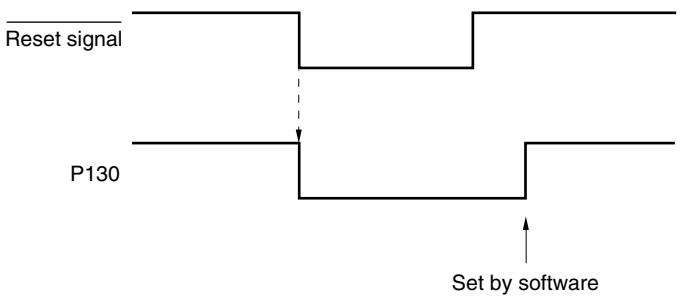

5.2.11 Port 14

	78K0/KB2	78K0/KC2	78K0/KD2	78K0/KE2		78K0/KF2
				Products whose flash memory is less than 32 KB	Products whose flash memory is at least 48 KB	
P140/PCL/INTP6	–	√Note 1	√	√		√
P141/BUZ/BUSY0/INTP7	–	–	–	P141/BUZ/INTP7Note 2		√
P142/$\overline{\text{SCKA0}}$	–	–	–	–		√
P143/SIA0	–	–	–	–		√
P144/SOA0	–	–	–	–		√
P145/STB0	–	–	–	–		√

Notes 1. This is not mounted onto 38-pin and 44-pin products of the 78K0/KC2.

2. The 78K0/KE2 products are not provided with the BUSY0 input function.

Remark √: Mounted, –: Not mounted

Port 14 is an I/O port with an output latch. Port 14 can be set to the input mode or output mode in 1-bit units using port mode register 14 (PM14). When the P140 to P145 pins are used as an input port, use of an on-chip pull-up resistor can be specified in 1-bit units by pull-up resistor option register 14 (PU14).

This port can also be used for external interrupt request input, buzzer output, clock output, serial interface data I/O, clock I/O, busy input, and strobe output.

Reset signal generation sets port 14 to input mode.

Figures 5-25 to 5-28 shows a block diagram of port 14.

Figure 5-25. Block Diagram of P140 and P141

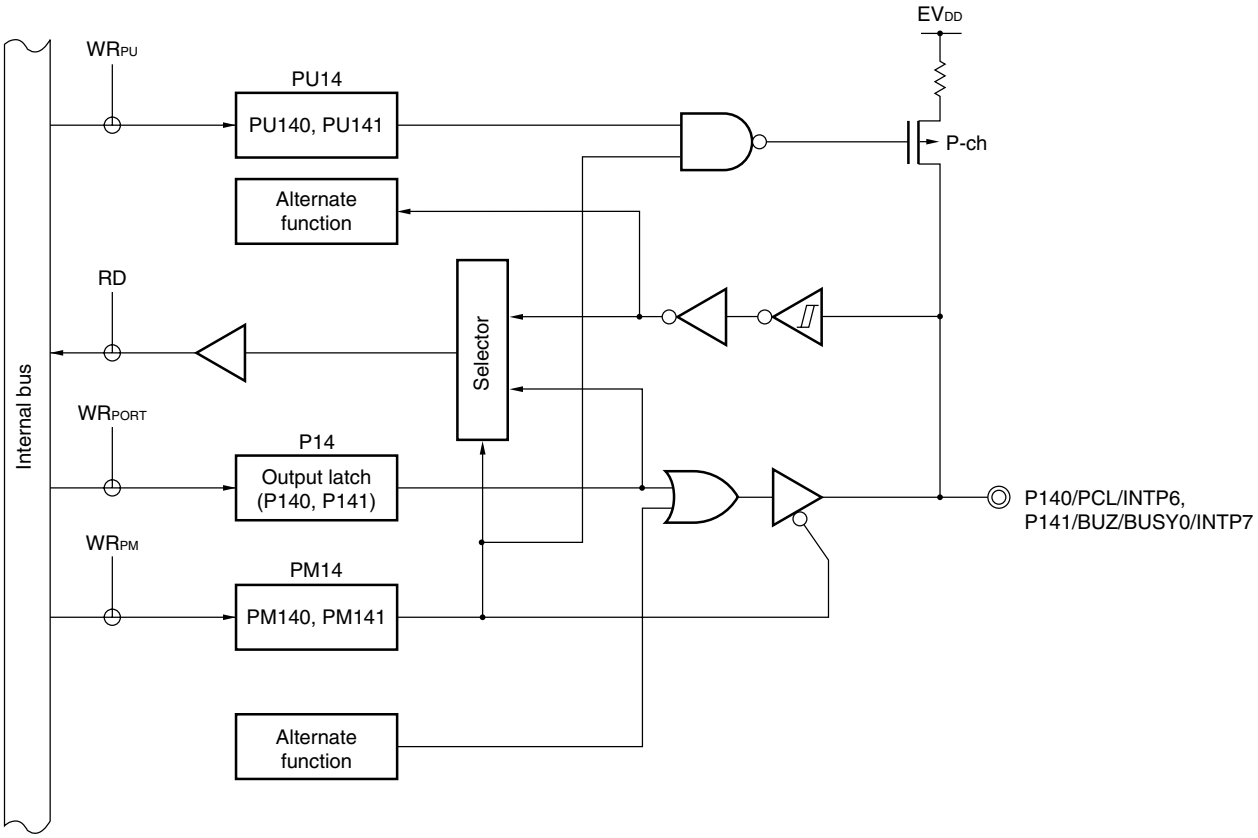

P14: Port register 14
PU14: Pull-up resistor option register 14
PM14: Port mode register 14
RD: Read signal
WR××: Write signal

Remark With products not provided with an EVDD or EVSS pin, replace EVDD with VDD, or replace EVSS with VSS.

Figure 5-26. Block Diagram of P142

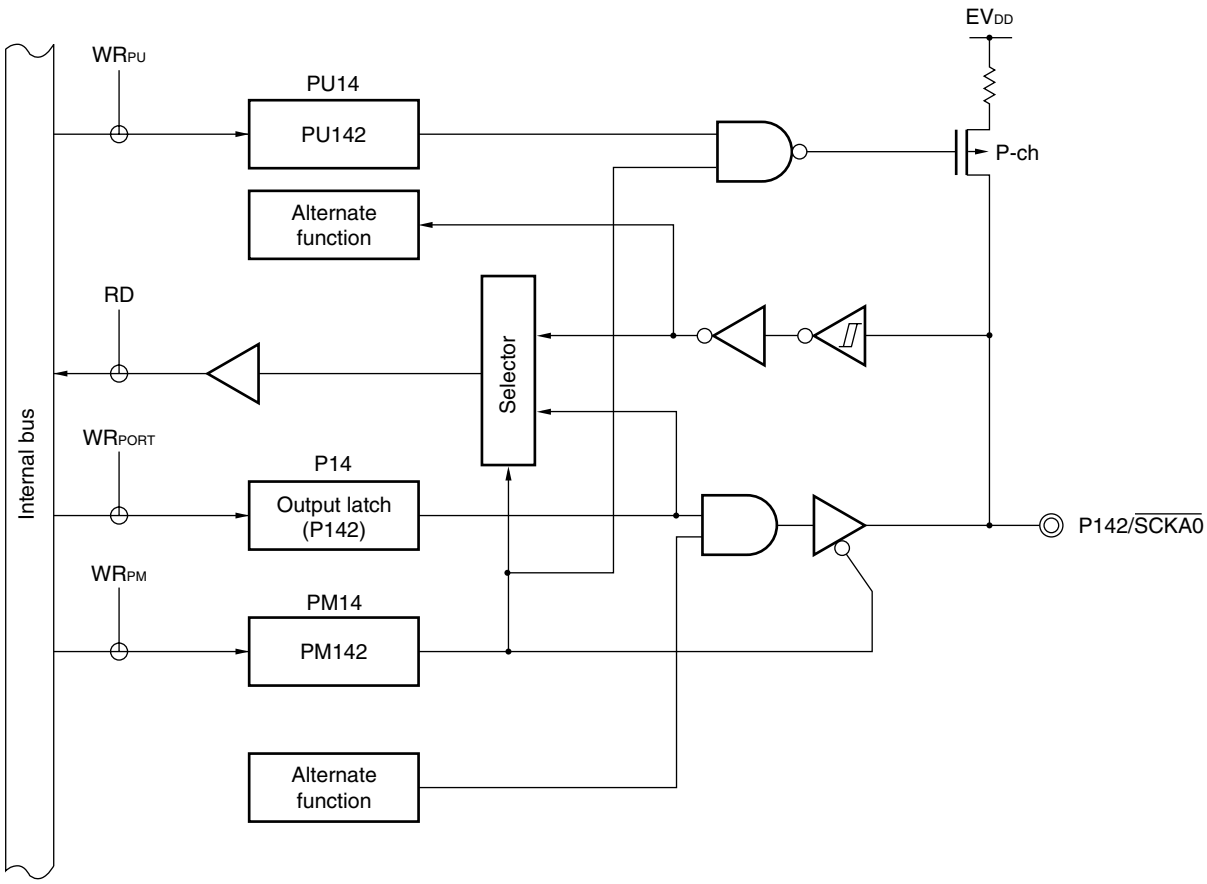

P14: Port register 14
PU14: Pull-up resistor option register 14
PM14: Port mode register 14
RD: Read signal
WR××: Write signal

Remark With products not provided with an EVDD or EVSS pin, replace EVDD with VDD, or replace EVSS with VSS.

Figure 5-27. Block Diagram of P143

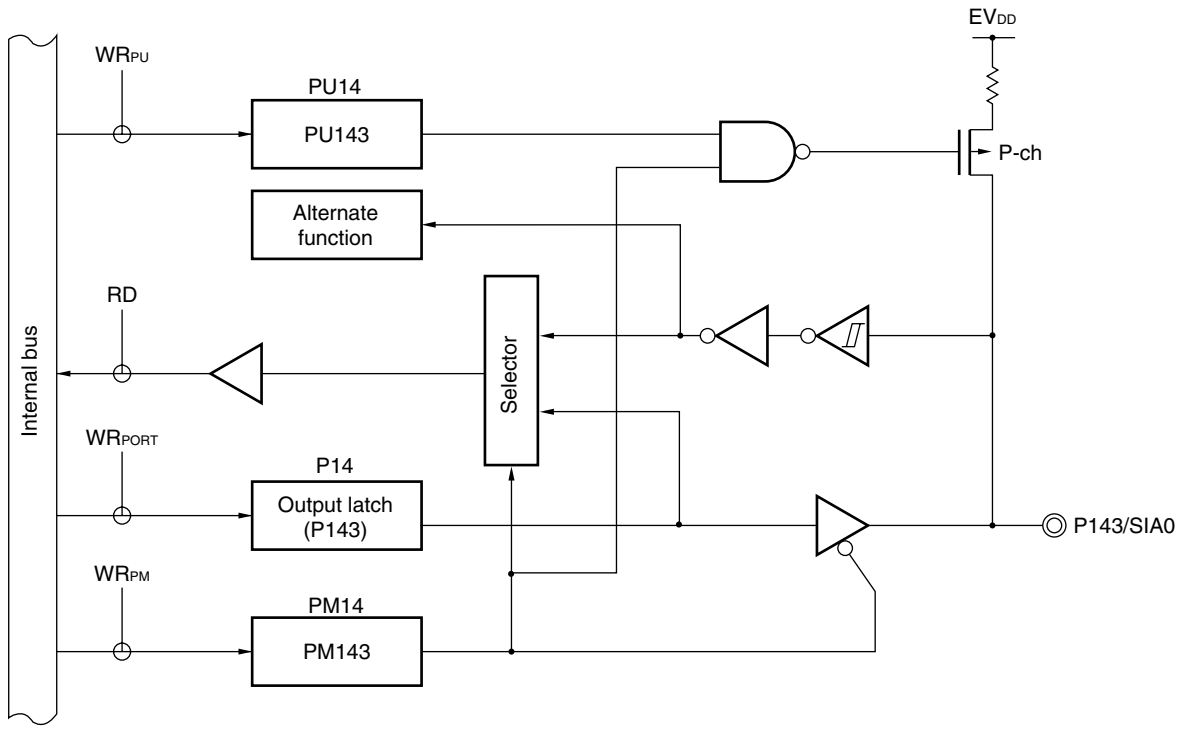

P14: Port register 14
PU14: Pull-up resistor option register 14
PM14: Port mode register 14
RD: Read signal
WR××: Write signal

Remark With products not provided with an EV_{DD} or EV_{SS} pin, replace EV_{DD} with V_{DD}, or replace EV_{SS} with V_{SS}.

Figure 5-28. Block Diagram of P144 and P145

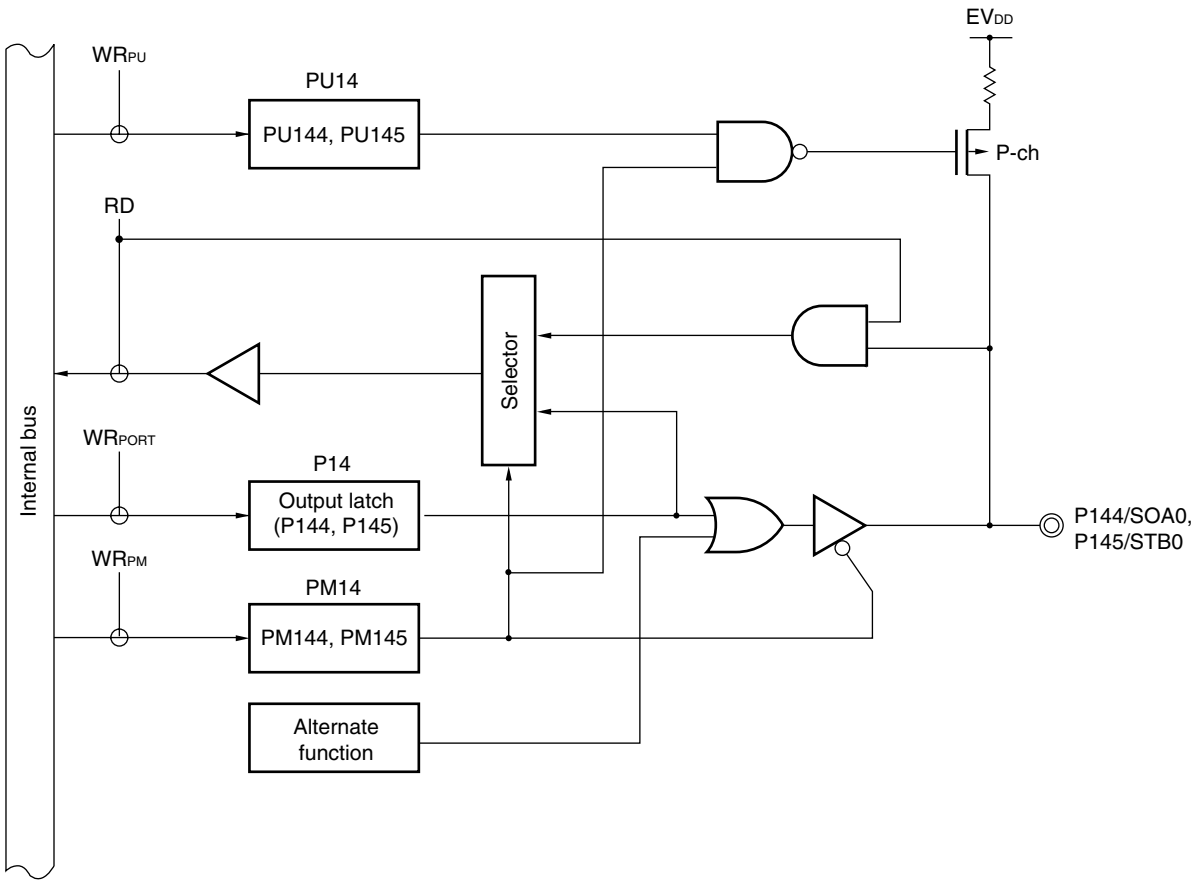

P14: Port register 14
PU14: Pull-up resistor option register 14
PM14: Port mode register 14
RD: Read signal
WR××: Write signal

Remark With products not provided with an EV_{DD} or EV_{SS} pin, replace EV_{DD} with V_{DD}, or replace EV_{SS} with V_{SS}.

5.3 Registers Controlling Port Function

Port functions are controlled by the following four types of registers.

- Port mode registers (PMxx)
- Port registers (Pxx)
- Pull-up resistor option registers (PUxx)
- A/D port configuration register (ADPC)

(1) Port mode registers (PMxx)

These registers specify input or output mode for the port in 1-bit units.

These registers can be set by a 1-bit or 8-bit memory manipulation instruction.

Reset signal generation sets these registers to FFH.

When port pins are used as alternate-function pins, set the port mode register by referencing **5.5 Settings of Port Mode Register and Output Latch When Using Alternate Function**.

Figure 5-29. Format of Port Mode Register (78K0/KB2)

Symbol	7	6	5	4	3	2	1	0	Address	After reset	R/W
PM0	1	1	1	1	1	1	PM01	PM00	FF20H	FFH	R/W
PM1	PM17	PM16	PM15	PM14	PM13	PM12	PM11	PM10	FF21H	FFH	R/W
PM2	1	1	1	1	PM23	PM22	PM21	PM20	FF22H	FFH	R/W
PM3	1	1	1	1	PM33	PM32	PM31	PM30	FF23H	FFH	R/W
PM6	1	1	1	1	1	1	PM61	PM60	FF26H	FFH	R/W
PM12	1	1	1	1	1	PM122	PM121	PM120	FF2CH	FFH	R/W

PMmn	Pmn pin I/O mode selection (m = 0 to 3, 6, 12; n = 0 to 7)
0	Output mode (output buffer on)
1	Input mode (output buffer off)

Caution Be sure to set bits 2 to 7 of PM0, bits 4 to 7 of PM2, bits 4 to 7 of PM3, bits 2 to 7 of PM6, bits 3 to 7 of PM12 to 1.

Figure 5-30. Format of Port Mode Register (78K0/KC2)

Symbol	7	6	5	4	3	2	1	0	Address	After reset	R/W
PM0	1	1	1	1	1	1	PM01	PM00	FF20H	FFH	R/W
PM1	PM17	PM16	PM15	PM14	PM13	PM12	PM11	PM10	FF21H	FFH	R/W
PM2	PM27	PM26	PM25	PM24	PM23	PM22	PM21	PM20	FF22H	FFH	R/W
PM3	1	1	1	1	PM33	PM32	PM31	PM30	FF23H	FFH	R/W
PM4	1	1	1	1	1	1	PM41	PM40	FF24H	FFH	R/W
PM6	1	1	1	1	PM63	PM62	PM61	PM60	FF26H	FFH	R/W
PM7	1	1	PM75[Note]	PM74[Note]	PM73	PM72	PM71	PM70	FF27H	FFH	R/W
PM12	1	1	1	PM124	PM123	PM122	PM121	PM120	FF2CH	FFH	R/W
PM14[Note]	1	1	1	1	1	1	1	PM140[Note]	FF2EH	FFH	R/W

PMmn	Pmn pin I/O mode selection (m = 0 to 4, 6, 7, 12, 14; n = 0 to 7)
0	Output mode (output buffer on)
1	Input mode (output buffer off)

Note 48-pin products only

Caution For the 38-pin products, be sure to set bits 2 to 7 of PM0, bits 6 and 7 of PM2, bits 4 to 7 of PM3, bits 2 to 7 of PM4, bits 4 to 7 of PM6, bits 4 to 7 of PM7, and bits 5 to 7 of PM12 to "1". Also, be sure to set bits 0 and 1 of PM4, and bits 2 and 3 of PM7 to "0".
For the 44-pin products, be sure to set bits 2 to 7 of PM0, bits 4 to 7 of PM3, bits 2 to 7 of PM4, bits 4 to 7 of PM6, bits 4 to 7 of PM7, and bits 5 to 7 of PM12 to "1".
For the 48-pin products, be sure to set bits 2 to 7 of PM0, bits 4 to 7 of PM3, bits 2 to 7 of PM4, bits 4 to 7 of PM6, bits 6 and 7 of PM7, bits 5 to 7 of PM12, and bits 1 to 7 of PM14 to "1".

Figure 5-31. Format of Port Mode Register (78K0/KD2)

Symbol	7	6	5	4	3	2	1	0	Address	After reset	R/W
PM0	1	1	1	1	PM03	PM02	PM01	PM00	FF20H	FFH	R/W
PM1	PM17	PM16	PM15	PM14	PM13	PM12	PM11	PM10	FF21H	FFH	R/W
PM2	PM27	PM26	PM25	PM24	PM23	PM22	PM21	PM20	FF22H	FFH	R/W
PM3	1	1	1	1	PM33	PM32	PM31	PM30	FF23H	FFH	R/W
PM4	1	1	1	1	1	1	PM41	PM40	FF24H	FFH	R/W
PM6	1	1	1	1	PM63	PM62	PM61	PM60	FF26H	FFH	R/W
PM7	PM77	PM76	PM75	PM74	PM73	PM72	PM71	PM70	FF27H	FFH	R/W
PM12	1	1	1	PM124	PM123	PM122	PM121	PM120	FF2CH	FFH	R/W
PM14	1	1	1	1	1	1	1	PM140	FF2EH	FFH	R/W

PMmn	Pmn pin I/O mode selection (m = 0 to 4, 6, 7, 12, 14; n = 0 to 7)
0	Output mode (output buffer on)
1	Input mode (output buffer off)

Caution Be sure to set bits 4 to 7 of PM0, bits 4 to 7 of PM3, bits 2 to 7 of PM4, bits 4 to 7 of PM6, bits 5 to 7 of PM12, and bits 1 to 7 of PM14 to 1.

Figure 5-32. Format of Port Mode Register (78K0/KE2)

Symbol	7	6	5	4	3	2	1	0	Address	After reset	R/W
PM0	1	PM06	PM05	PM04	PM03	PM02	PM01	PM00	FF20H	FFH	R/W
PM1	PM17	PM16	PM15	PM14	PM13	PM12	PM11	PM10	FF21H	FFH	R/W
PM2	PM27	PM26	PM25	PM24	PM23	PM22	PM21	PM20	FF22H	FFH	R/W
PM3	1	1	1	1	PM33	PM32	PM31	PM30	FF23H	FFH	R/W
PM4	1	1	1	1	PM43	PM42	PM41	PM40	FF24H	FFH	R/W
PM5	1	1	1	1	PM53	PM52	PM51	PM50	FF25H	FFH	R/W
PM6	1	1	1	1	PM63	PM62	PM61	PM60	FF26H	FFH	R/W
PM7	PM77	PM76	PM75	PM74	PM73	PM72	PM71	PM70	FF27H	FFH	R/W
PM12	1	1	1	PM124	PM123	PM122	PM121	PM120	FF2CH	FFH	R/W
PM14	1	1	1	1	1	1	PM141	PM140	FF2EH	FFH	R/W

PMmn	Pmn pin I/O mode selection (m = 0 to 7, 12, 14; n = 0 to 7)
0	Output mode (output buffer on)
1	Input mode (output buffer off)

Caution Be sure to set bit 7 of PM0, bits 4 to 7 of PM3, bits 4 to 7 of PM4, bits 4 to 7 of PM5, bits 4 to 7 of PM6, bits 5 to 7 of PM12, and bits 2 to 7 of PM14 to "1".

Figure 5-33. Format of Port Mode Register (78K0/KF2)

Symbol	7	6	5	4	3	2	1	0	Address	After reset	R/W
PM0	1	PM06	PM05	PM04	PM03	PM02	PM01	PM00	FF20H	FFH	R/W
PM1	PM17	PM16	PM15	PM14	PM13	PM12	PM11	PM10	FF21H	FFH	R/W
PM2	PM27	PM26	PM25	PM24	PM23	PM22	PM21	PM20	FF22H	FFH	R/W
PM3	1	1	1	1	PM33	PM32	PM31	PM30	FF23H	FFH	R/W
PM4	PM47	PM46	PM45	PM44	PM43	PM42	PM41	PM40	FF24H	FFH	R/W
PM5	PM57	PM56	PM55	PM54	PM53	PM52	PM51	PM50	FF25H	FFH	R/W
PM6	PM67	PM66	PM65	PM64	PM63	PM62	PM61	PM60	FF26H	FFH	R/W
PM7	PM77	PM76	PM75	PM74	PM73	PM72	PM71	PM70	FF27H	FFH	R/W
PM12	1	1	1	PM124	PM123	PM122	PM121	PM120	FF2CH	FFH	R/W
PM14	1	1	PM145	PM144	PM143	PM142	PM141	PM140	FF2EH	FFH	R/W

PMmn	Pmn pin I/O mode selection (m = 0 to 7, 12, 14; n = 0 to 7)
0	Output mode (output buffer on)
1	Input mode (output buffer off)

Caution Be sure to set bit 7 of PM0, bits 4 to 7 of PM3, bits 5 to 7 of PM12, and bits 6 and 7 of PM14 to "1".

(2) Port registers (Pxx)

These registers write the data that is output from the chip when data is output from a port.

If the data is read in the input mode, the pin level is read. If it is read in the output mode, the output latch value is read.

These registers can be set by a 1-bit or 8-bit memory manipulation instruction.

Reset signal generation clears these registers to 00H.

Figure 5-34. Format of Port Register (78K0/KB2)

Symbol	7	6	5	4	3	2	1	0	Address	After reset	R/W
P0	0	0	0	0	0	0	P01	P00	FF00H	00H (output latch)	R/W
P1	P17	P16	P15	P14	P13	P12	P11	P10	FF01H	00H (output latch)	R/W
P2	0	0	0	0	P23	P22	P21	P20	FF02H	00H (output latch)	R/W
P3	0	0	0	0	P33	P32	P31	P30	FF03H	00H (output latch)	R/W
P6	0	0	0	0	0	0	P61	P60	FF06H	00H (output latch)	R/W
P12	0	0	0	0	0	P122 Note	P121 Note	P120	FF0CH	00H (output latch)	R/W

Pmn	m = 0 to 3, 6, 12; n = 0 to 7	
	Output data control (in output mode)	Input data read (in input mode)
0	Output 0	Input low level
1	Output 1	Input high level

Note “0” is always read from the output latch of P121 and P122 if the pin is in the external clock input mode.

Figure 5-35. Format of Port Register (78K0/KC2)

Symbol	7	6	5	4	3	2	1	0	Address	After reset	R/W
P0	0	0	0	0	0	0	P01	P00	FF00H	00H (output latch)	R/W
P1	P17	P16	P15	P14	P13	P12	P11	P10	FF01H	00H (output latch)	R/W
P2	P27	P26	P25	P24	P23	P22	P21	P20	FF02H	00H (output latch)	R/W
P3	0	0	0	0	P33	P32	P31	P30	FF03H	00H (output latch)	R/W
P4	0	0	0	0	0	0	P41	P40	FF04H	00H (output latch)	R/W
P6	0	0	0	0	P63	P62	P61	P60	FF06H	00H (output latch)	R/W
P7	0	0	P75Note 1	P74Note 1	P73	P72	P71	P70	FF07H	00H (output latch)	R/W
P12	0	0	0	P124Note 2	P123Note 2	P122Note 2	P121Note 2	P120	FF0CH	00H (output latch)	R/W
P13Note 1	0	0	0	0	0	0	0	P130Note 1	FF0DH	00H (output latch)	R/W
P14Note 1	0	0	0	0	0	0	0	P140Note 1	FF0EH	00H (output latch)	R/W

Pmn	m = 0 to 4, 6, 7, 12 to 14; n = 0 to 7	
	Output data control (in output mode)	Input data read (in input mode)
0	Output 0	Input low level
1	Output 1	Input high level

Notes 1. 48-pin products only

2. “0” is always read from the output latch of P121 to P124 if the pin is in the external clock input mode.

Caution For the 38-pin products, be sure to set bits 6 and 7 of P2, bits 0 and 1 of P4, and bits 2 and 3 of P7 to “0”.

Figure 5-36. Format of Port Register (78K0/KD2)

Symbol	7	6	5	4	3	2	1	0	Address	After reset	R/W
P0	0	0	0	0	P03	P02	P01	P00	FF00H	00H (output latch)	R/W
P1	P17	P16	P15	P14	P13	P12	P11	P10	FF01H	00H (output latch)	R/W
P2	P27	P26	P25	P24	P23	P22	P21	P20	FF02H	00H (output latch)	R/W
P3	0	0	0	0	P33	P32	P31	P30	FF03H	00H (output latch)	R/W
P4	0	0	0	0	0	0	P41	P40	FF04H	00H (output latch)	R/W
P6	0	0	0	0	P63	P62	P61	P60	FF06H	00H (output latch)	R/W
P7	P77	P76	P75	P74	P73	P72	P71	P70	FF07H	00H (output latch)	R/W
P12	0	0	0	P124Note	P123Note	P122Note	P121Note	P120	FF0CH	00H (output latch)	R/W
P13	0	0	0	0	0	0	0	P130	FF0DH	00H (output latch)	R/W
P14	0	0	0	0	0	0	0	P140	FF0EH	00H (output latch)	R/W

Pmn	m = 0 to 4, 6, 7, 12 to 14; n = 0 to 7	
	Output data control (in output mode)	Input data read (in input mode)
0	Output 0	Input low level
1	Output 1	Input high level

Note “0” is always read from the output latch of P121 to P124 if the pin is in the external clock input mode.

Figure 5-37. Format of Port Register (78K0/KE2)

Symbol	7	6	5	4	3	2	1	0	Address	After reset	R/W
P0	0	P06	P05	P04	P03	P02	P01	P00	FF00H	00H (output latch)	R/W
P1	P17	P16	P15	P14	P13	P12	P11	P10	FF01H	00H (output latch)	R/W
P2	P27	P26	P25	P24	P23	P22	P21	P20	FF02H	00H (output latch)	R/W
P3	0	0	0	0	P33	P32	P31	P30	FF03H	00H (output latch)	R/W
P4	0	0	0	0	P43	P42	P41	P40	FF04H	00H (output latch)	R/W
P5	0	0	0	0	P53	P52	P51	P50	FF05H	00H (output latch)	R/W
P6	0	0	0	0	P63	P62	P61	P60	FF06H	00H (output latch)	R/W
P7	P77	P76	P75	P74	P73	P72	P71	P70	FF07H	00H (output latch)	R/W
P12	0	0	0	P124Note	P123Note	P122Note	P121Note	P120	FF0CH	00H (output latch)	R/W
P13	0	0	0	0	0	0	0	P130	FF0DH	00H (output latch)	R/W
P14	0	0	0	0	0	0	P141	P140	FF0EH	00H (output latch)	R/W

Pmn	m = 0 to 7, 12 to 14; n = 0 to 7	
	Output data control (in output mode)	Input data read (in input mode)
0	Output 0	Input low level
1	Output 1	Input high level

Note “0” is always read from the output latch of P121 to P124 if the pin is in the external clock input mode.

Figure 5-38. Format of Port Register (78K0/KF2)

Symbol	7	6	5	4	3	2	1	0	Address	After reset	R/W
P0	0	P06	P05	P04	P03	P02	P01	P00	FF00H	00H (output latch)	R/W
P1	P17	P16	P15	P14	P13	P12	P11	P10	FF01H	00H (output latch)	R/W
P2	P27	P26	P25	P24	P23	P22	P21	P20	FF02H	00H (output latch)	R/W
P3	0	0	0	0	P33	P32	P31	P30	FF03H	00H (output latch)	R/W
P4	P47	P46	P45	P44	P43	P42	P41	P40	FF04H	00H (output latch)	R/W
P5	P57	P56	P55	P54	P53	P52	P51	P50	FF05H	00H (output latch)	R/W
P6	P67	P66	P65	P64	P63	P62	P61	P60	FF06H	00H (output latch)	R/W
P7	P77	P76	P75	P74	P73	P72	P71	P70	FF07H	00H (output latch)	R/W
P12	0	0	0	P124Note	P123Note	P122Note	P121Note	P120	FF0CH	00H (output latch)	R/W
P13	0	0	0	0	0	0	0	P130	FF0DH	00H (output latch)	R/W
P14	0	0	P145	P144	P143	P142	P141	P140	FF0EH	00H (output latch)	R/W

Pmn	m = 0 to 7, 12 to 14; n = 0 to 7	
	Output data control (in output mode)	Input data read (in input mode)
0	Output 0	Input low level
1	Output 1	Input high level

Note “0” is always read from the output latch of P121 to P124 if the pin is in the external clock input mode.

(3) Pull-up resistor option registers (PUxx)

These registers specify whether the on-chip pull-up resistors are to be used or not. On-chip pull-up resistors can be used in 1-bit units only for the bits set to input mode of the pins to which the use of an on-chip pull-up resistor has been specified in these registers. On-chip pull-up resistors cannot be connected to bits set to output mode and bits used as alternate-function output pins, regardless of the settings of these registers.

These registers can be set by a 1-bit or 8-bit memory manipulation instruction.

Reset signal generation clears these registers to 00H.

Figure 5-39. Format of Pull-up Resistor Option Register (78K0/KB2)

Symbol	7	6	5	4	3	2	1	0	Address	After reset	R/W
PU0	0	0	0	0	0	0	PU01	PU00	FF30H	00H	R/W
PU1	PU17	PU16	PU15	PU14	PU13	PU12	PU11	PU10	FF31H	00H	R/W
PU3	0	0	0	0	PU33	PU32	PU31	PU30	FF33H	00H	R/W
PU12	0	0	0	0	0	0	0	PU120	FF3CH	00H	R/W

PUmn	Pmn pin on-chip pull-up resistor selection (m = 0, 1, 3, 12; n = 0 to 7)
0	On-chip pull-up resistor not connected
1	On-chip pull-up resistor connected

Figure 5-40. Format of Pull-up Resistor Option Register (78K0/KC2)

Symbol	7	6	5	4	3	2	1	0	Address	After reset	R/W
PU0	0	0	0	0	0	0	PU01	PU00	FF30H	00H	R/W
PU1	PU17	PU16	PU15	PU14	PU13	PU12	PU11	PU10	FF31H	00H	R/W
PU3	0	0	0	0	PU33	PU32	PU31	PU30	FF33H	00H	R/W
PU4	0	0	0	0	0	0	PU41	PU40	FF34H	00H	R/W
PU7	0	0	PU75[Note]	PU74[Note]	PU73	PU72	PU71	PU70	FF37H	00H	R/W
PU12	0	0	0	0	0	0	0	PU120	FF3CH	00H	R/W
PU14[Note]	0	0	0	0	0	0	0	PU140[Note]	FF3EH	00H	R/W

PUmn	Pmn pin on-chip pull-up resistor selection (m = 0, 1, 3, 4, 7, 12, 14; n = 0 to 7)
0	On-chip pull-up resistor not connected
1	On-chip pull-up resistor connected

Note 48-pin products only

Figure 5-41. Format of Pull-up Resistor Option Register (78K0/KD2)

Symbol	7	6	5	4	3	2	1	0	Address	After reset	R/W
PU0	0	0	0	0	PU03	PU02	PU01	PU00	FF30H	00H	R/W
PU1	PU17	PU16	PU15	PU14	PU13	PU12	PU11	PU10	FF31H	00H	R/W
PU3	0	0	0	0	PU33	PU32	PU31	PU30	FF33H	00H	R/W
PU4	0	0	0	0	0	0	PU41	PU40	FF34H	00H	R/W
PU7	PU77	PU76	PU75	PU74	PU73	PU72	PU71	PU70	FF37H	00H	R/W
PU12	0	0	0	0	0	0	0	PU120	FF3CH	00H	R/W
PU14	0	0	0	0	0	0	0	PU140	FF3EH	00H	R/W

PUmn	Pmn pin on-chip pull-up resistor selection (m = 0, 1, 3, 4, 7, 12, 14; n = 0 to 7)
0	On-chip pull-up resistor not connected
1	On-chip pull-up resistor connected

Figure 5-42. Format of Pull-up Resistor Option Register (78K0/KE2)

Symbol	7	6	5	4	3	2	1	0	Address	After reset	R/W
PU0	0	PU06	PU05	PU04	PU03	PU02	PU01	PU00	FF30H	00H	R/W
PU1	PU17	PU16	PU15	PU14	PU13	PU12	PU11	PU10	FF31H	00H	R/W
PU3	0	0	0	0	PU33	PU32	PU31	PU30	FF33H	00H	R/W
PU4	0	0	0	0	PU43	PU42	PU41	PU40	FF34H	00H	R/W
PU5	0	0	0	0	PU53	PU52	PU51	PU50	FF35H	00H	R/W
PU7	PU77	PU76	PU75	PU74	PU73	PU72	PU71	PU70	FF37H	00H	R/W
PU12	0	0	0	0	0	0	0	PU120	FF3CH	00H	R/W
PU14	0	0	0	0	0	0	PU141	PU140	FF3EH	00H	R/W

PUmn	Pmn pin on-chip pull-up resistor selection (m = 0, 1, 3 to 5, 7, 12, 14; n = 0 to 7)
0	On-chip pull-up resistor not connected
1	On-chip pull-up resistor connected

Figure 5-43. Format of Pull-up Resistor Option Register (78K0/KF2)

Symbol	7	6	5	4	3	2	1	0	Address	After reset	R/W
PU0	0	PU06	PU05	PU04	PU03	PU02	PU01	PU00	FF30H	00H	R/W
PU1	PU17	PU16	PU15	PU14	PU13	PU12	PU11	PU10	FF31H	00H	R/W
PU3	0	0	0	0	PU33	PU32	PU31	PU30	FF33H	00H	R/W
PU4	PU47	PU46	PU45	PU44	PU43	PU42	PU41	PU40	FF34H	00H	R/W
PU5	PU57	PU56	PU55	PU54	PU53	PU52	PU51	PU50	FF35H	00H	R/W
PU6	PU67	PU66	PU65	PU64	0	0	0	0	FF36H	00H	R/W
PU7	PU77	PU76	PU75	PU74	PU73	PU72	PU71	PU70	FF37H	00H	R/W
PU12	0	0	0	0	0	0	0	PU120	FF3CH	00H	R/W
PU14	0	0	PU145	PU144	PU143	PU142	PU141	PU140	FF3EH	00H	R/W

PUmn	Pmn pin on-chip pull-up resistor selection (m = 0, 1, 3 to 7, 12, 14; n = 0 to 7)
0	On-chip pull-up resistor not connected
1	On-chip pull-up resistor connected

(4) A/D port configuration register (ADPC)

This register switches the P20/ANI0 to P27/ANI7 pins to digital I/O of port or analog input of A/D converter.

ADPC can be set by a 1-bit or 8-bit memory manipulation instruction.

Reset signal generation clears this register to 00H.

Remark P20/ANI0 to P23/ANI3 pins: 78K0/KB2
P20/ANI0 to P25/ANI5 pins: 38-pin products of 78K0/KC2
P20/ANI0 to P27/ANI7 pins: Products other than above

Figure 5-44. Format of A/D Port Configuration Register (ADPC)

Address: FF2FH After reset: 00H R/W

Symbol	7	6	5	4	3	2	1	0
ADPC	0	0	0	0	ADPC3	ADPC2	ADPC1	ADPC0

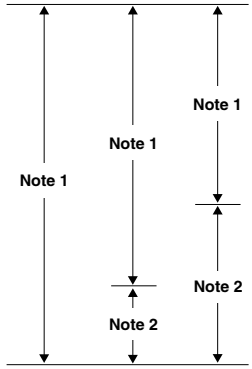

ADPC3	ADPC2	ADPC1	ADPC0	Digital I/O (D)/analog input (A) switching							
				P27/ ANI7	P26/ ANI6	P25/ ANI5	P24/ ANI4	P23/ ANI3	P22/ ANI2	P21/ ANI1	P20/ ANI0
0	0	0	0	A	A	A	A	A	A	A	A
0	0	0	1	A	A	A	A	A	A	A	D
0	0	1	0	A	A	A	A	A	A	D	D
0	0	1	1	A	A	A	A	A	D	D	D
0	1	0	0	A	A	A	A	D	D	D	D
0	1	0	1	A	A	A	D	D	D	D	D
0	1	1	0	A	A	D	D	D	D	D	D
0	1	1	1	A	D	D	D	D	D	D	D
1	0	0	0	D	D	D	D	D	D	D	D
Other than above				Setting prohibited							

Notes 1. Setting permitted

2. Setting prohibited

Cautions 1. Set the channel used for A/D conversion to the input mode by using port mode register 2 (PM2).

2. If data is written to ADPC, a wait cycle is generated. Do not write data to ADPC when the peripheral hardware clock is stopped. For details, see CHAPTER 36 CAUTIONS FOR WAIT.

5.4 Port Function Operations

Port operations differ depending on whether the input or output mode is set, as shown below.

5.4.1 Writing to I/O port

(1) Output mode

A value is written to the output latch by a transfer instruction, and the output latch contents are output from the pin.
Once data is written to the output latch, it is retained until data is written to the output latch again.
The data of the output latch is cleared when a reset signal is generated.

(2) Input mode

A value is written to the output latch by a transfer instruction, but since the output buffer is off, the pin status does not change.
Once data is written to the output latch, it is retained until data is written to the output latch again.
The data of the output latch is cleared when a reset signal is generated.

5.4.2 Reading from I/O port

(1) Output mode

The output latch contents are read by a transfer instruction. The output latch contents do not change.

(2) Input mode

The pin status is read by a transfer instruction. The output latch contents do not change.

5.4.3 Operations on I/O port

(1) Output mode

An operation is performed on the output latch contents, and the result is written to the output latch. The output latch contents are output from the pins.
Once data is written to the output latch, it is retained until data is written to the output latch again.
The data of the output latch is cleared when a reset signal is generated.

(2) Input mode

The pin level is read and an operation is performed on its contents. The result of the operation is written to the output latch, but since the output buffer is off, the pin status does not change.
The data of the output latch is cleared when a reset signal is generated.

5.5 Settings of Port Mode Register and Output Latch When Using Alternate Function

To use the alternate function of a port pin, set the port mode register and output latch as shown in Table 5-6.

Remark The port pins mounted depend on the product. See **Table 5-3. Port Functions**.

Table 5-6. Settings of Port Mode Register and Output Latch When Using Alternate Function (1/2)

Pin Name	Alternate Function		PM××	P××
	Function Name	I/O		
P00	TI000	Input	1	×
P01	TI010	Input	1	×
	TO00	Output	0	0
P02	SO11	Output	0	0
P03	SI11	Input	1	×
P04	$\overline{SCK11}$	Input	1	×
		Output	0	1
P05	$\overline{SSI11}$	Input	1	×
	TI001	Input	1	×
P06	TI011	Input	1	×
	TO01	Output	0	0
P10	$\overline{SCK10}$	Input	1	×
		Output	0	1
	TxD0	Output	0	1
P11	SI10	Input	1	×
	RxD0	Input	1	×
P12	SO10	Output	0	0
P13	TxD6	Output	0	1
P14	RxD6	Input	1	×
P15	TOH0	Output	0	0
P16	TOH1	Output	0	0
	INTP5	Input	1	×
P17	TI50	Input	1	×
	TO50	Output	0	0
P20 to P27[Note]	ANI0 to ANI7[Note]	Input	1	×

Note The function of the ANI0/P20 to ANI7/P27 pins can be selected by using the A/D port configuration register (ADPC), the analog input channel specification register (ADS), and PM2.

ADPC	PM2	ADS	ANI0/P20 to ANI7/P27 Pins
Analog input selection	Input mode	Selects ANI.	Analog input (to be converted)
		Does not select ANI.	Analog input (not to be converted)
	Output mode	Selects ANI.	Setting prohibited
		Does not select ANI.	
Digital I/O selection	Input mode	–	Digital input
	Output mode	–	Digital output

Remark ×: Don't care
PM××: Port mode register
P××: Port output latch

Table 5-6. Settings of Port Mode Register and Output Latch When Using Alternate Function (2/2)

Pin Name	Alternate Function		PM××	P××
	Function Name	I/O		
P30 to P32	INTP1 to INTP3	Input	1	×
P33	INTP4	Input	1	×
	TI51	Input	1	×
	TO51	Output	0	0
P60	SCL0	I/O	0	0
P61	SDA0	I/O	0	0
P62	EXSCL0	Input	1	×
P70 to P77	KR0 to KR7	Input	1	×
P120	INTP0	Input	1	×
	EXLVI	Input	1	×
P121	X1[Note]	–	×	×
P122	X2[Note]	–	×	×
	EXCLK[Note]	Input	×	×
P123	XT1[Note]	–	×	×
P124	XT2[Note]	–	×	×
	EXCLKS[Note]	Input	×	×
P140	PCL	Output	0	0
	INTP6	Input	1	×
P141	BUZ	Output	0	0
	INTP7	Input	1	×
	BUSY0	Input	1	×
P142	$\overline{\text{SCKA0}}$	Input	1	×
		Output	0	1
P143	SIA0	Input	1	×
P144	SOA0	Output	0	0
P145	STB0	Output	0	0

Note When using the P121 to P124 pins to connect a resonator for the main system clock (X1, X2) or subsystem clock (XT1, XT2), or to input an external clock for the main system clock (EXCLK) or subsystem clock (EXCLKS), the X1 oscillation mode, XT1 oscillation mode, or external clock input mode must be set by using the clock operation mode select register (OSCCTL) (for details, see **6.3 (1) Clock operation mode select register (OSCCTL)** and **(3) Setting of operation mode for subsystem clock pin**). The reset value of OSCCTL is 00H (all of the P121 to P124 are I/O port pins). At this time, setting of PM121 to PM124 and P121 to P124 is not necessary.

Remarks 1. ×: Don't care
PM××: Port mode register
P××: Port output latch

2. X1, X2, P31, and P32 of the product with an on-chip debug function (μPD78F05xxD and 78F05xxDA) can be used as on-chip debug mode setting pins (OCD0A, OCD0B, OCD1A, and OCD1B) when the on-chip debug function is used. For how to connect an on-chip debug emulator (QB-MINI2), see **CHAPTER 28 ON-CHIP DEBUG FUNCTION (μPD78F05xxD AND 78F05xxDA ONLY).**

5.6 Cautions on 1-Bit Manipulation Instruction for Port Register n (Pn)

When a 1-bit manipulation instruction is executed on a port that provides both input and output functions, the output latch value of an input port that is not subject to manipulation may be written in addition to the targeted bit.

Therefore, it is recommended to rewrite the output latch when switching a port from input mode to output mode.

<Example> When P10 is an output port, P11 to P17 are input ports (all pin statuses are high level), and the port latch value of port 1 is 00H, if the output of output port P10 is changed from low level to high level via a 1-bit manipulation instruction, the output latch value of port 1 is FFH.

Explanation: The targets of writing to and reading from the Pn register of a port whose PMnm bit is 1 are the output latch and pin status, respectively.

A 1-bit manipulation instruction is executed in the following order in the 78K0/Kx2 microcontrollers.

<1> The Pn register is read in 8-bit units.
<2> The targeted one bit is manipulated.
<3> The Pn register is written in 8-bit units.

In step <1>, the output latch value (0) of P10, which is an output port, is read, while the pin statuses of P11 to P17, which are input ports, are read. If the pin statuses of P11 to P17 are high level at this time, the read value is FEH.

The value is changed to FFH by the manipulation in <2>.

FFH is written to the output latch by the manipulation in <3>.

Figure 5-45. Bit Manipulation Instruction (P10)

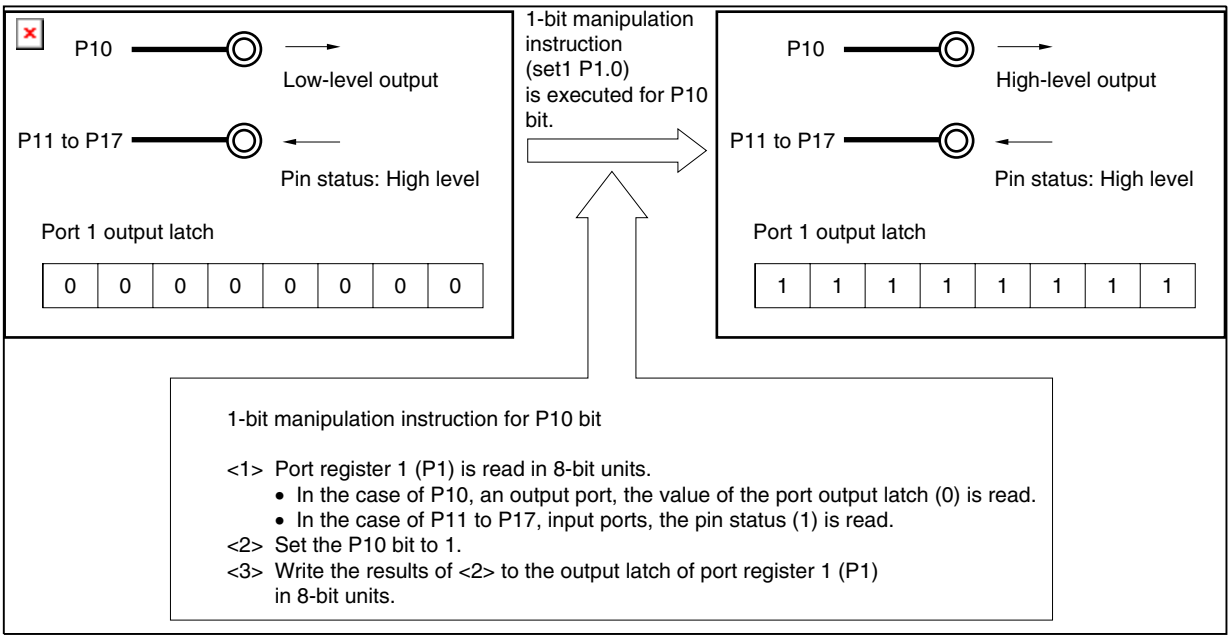

CHAPTER 6 CLOCK GENERATOR

6.1 Functions of Clock Generator

The clock generator generates the clock to be supplied to the CPU and peripheral hardware.
The following three kinds of system clocks and clock oscillators are selectable.

(1) Main system clock

<1> X1 oscillator

This circuit oscillates a clock of f_X = 1 to 20 MHz by connecting a resonator to X1 and X2.
Oscillation can be stopped by executing the STOP instruction or using the main OSC control register (MOC).

<2> Internal high-speed oscillator

This circuit oscillates a clock of f_{RH} = 8 MHz (TYP.). After a reset release, the CPU always starts operating with this internal high-speed oscillation clock. Oscillation can be stopped by executing the STOP instruction or using the internal oscillation mode register (RCM).

An external main system clock (f_{EXCLK} = 1 to 20 MHz) can also be supplied from the EXCLK/X2/P122 pin. An external main system clock input can be disabled by executing the STOP instruction or using RCM.
As the main system clock, a high-speed system clock (X1 clock or external main system clock) or internal high-speed oscillation clock can be selected by using the main clock mode register (MCM).

(2) Subsystem clock[Note]

- **Subsystem clock oscillator**

  This circuit oscillates at a frequency of f_{XT} = 32.768 kHz by connecting a 32.768 kHz resonator across XT1 and XT2. Oscillation can be stopped by using the processor clock control register (PCC) and clock operation mode select register (OSCCTL).

An external subsystem clock (f_{EXCLKS} = 32.768 kHz) can also be supplied from the EXCLKS/XT2/P124 pin. An external subsystem clock input can be disabled by setting PCC and OSCCTL.

Note The 78K0/KB2 is not provided with a subsystem clock.

Remark f_X: X1 clock oscillation frequency
f_{RH}: Internal high-speed oscillation clock frequency
f_{EXCLK}: External main system clock frequency
f_{XT}: XT1 clock oscillation frequency
f_{EXCLKS}: External subsystem clock frequency

(3) Internal low-speed oscillation clock (clock for watchdog timer)

- **Internal low-speed oscillator**

  This circuit oscillates a clock of f_{RL} = 240 kHz (TYP.). After a reset release, the internal low-speed oscillation clock always starts operating.

  Oscillation can be stopped by using the internal oscillation mode register (RCM) when "internal low-speed oscillator can be stopped by software" is set by option byte.

  The internal low-speed oscillation clock cannot be used as the CPU clock. The following hardware operates with the internal low-speed oscillation clock.

  - Watchdog timer
  - TMH1 (when f_{RL}, $f_{RL}/2^7$, or $f_{RL}/2^9$ is selected)

Remark f_{RL}: Internal low-speed oscillation clock frequency

6.2 Configuration of Clock Generator

The clock generator includes the following hardware.

Table 6-1. Configuration of Clock Generator

Item	Configuration
Control registers	Clock operation mode select register (OSCCTL) Processor clock control register (PCC) Internal oscillation mode register (RCM) Main OSC control register (MOC) Main clock mode register (MCM) Oscillation stabilization time counter status register (OSTC) Oscillation stabilization time select register (OSTS)
Oscillators	X1 oscillator XT1 oscillator[Note] Internal high-speed oscillator Internal low-speed oscillator

Note The 78K0/KB2 is not provided with an XT1 oscillator (subsystem clock).

Figure 6-1. Block Diagram of Clock Generator (78K0/KB2)

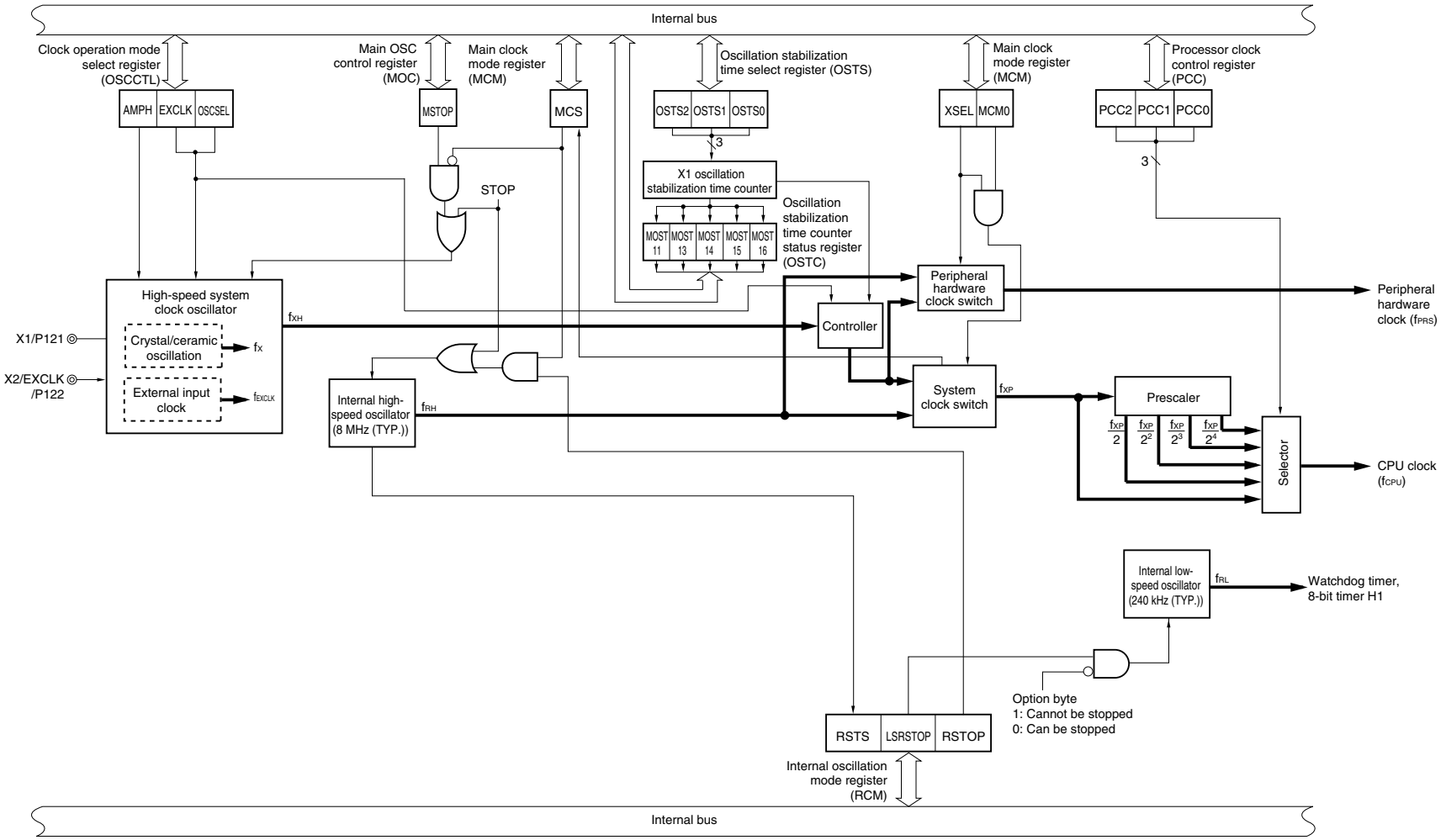

Figure 6-2. Block Diagram of Clock Generator (78K0/KC2, 78K0/KD2, 78K0/KE2, and 78K0/KF2)

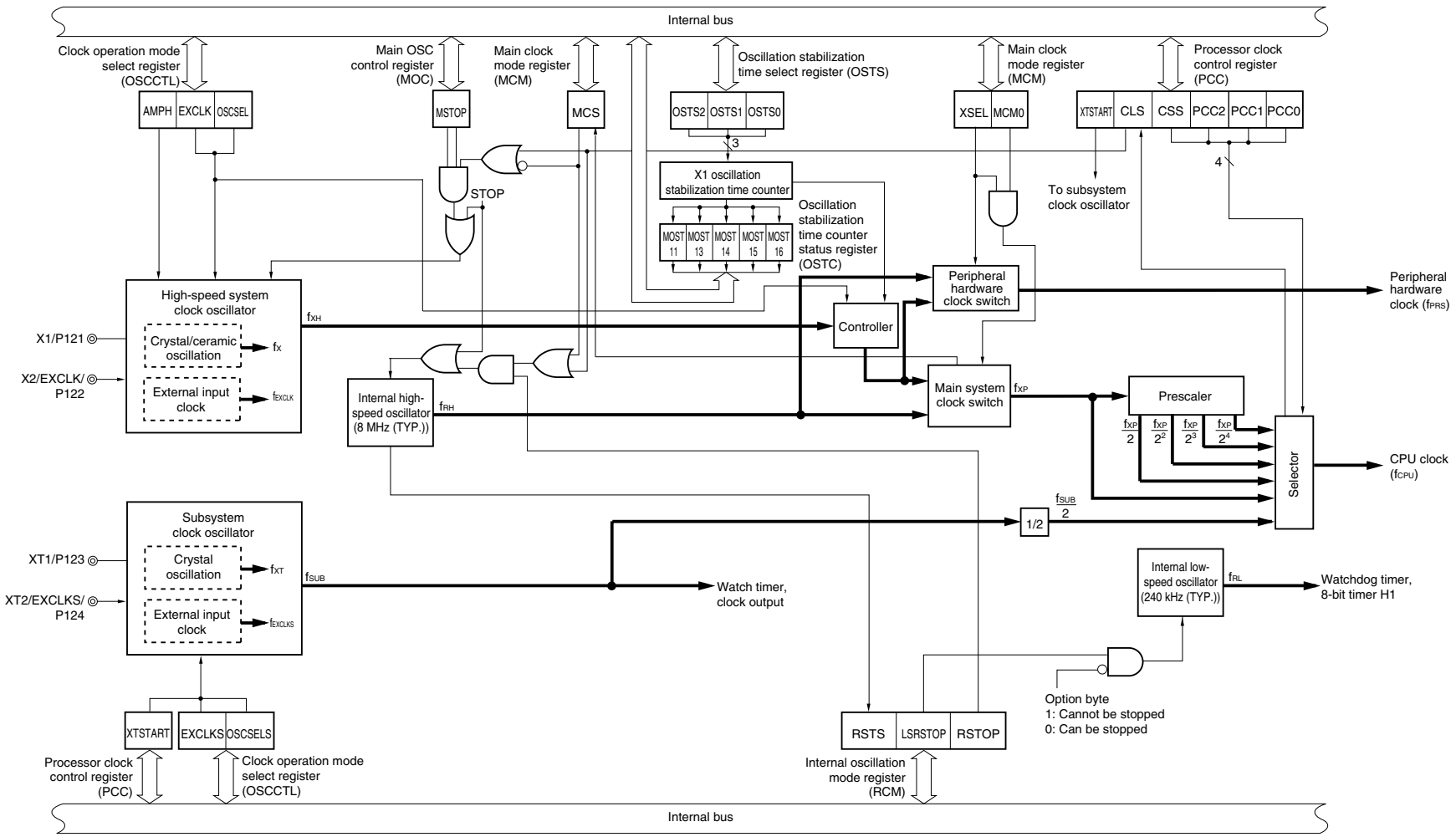

Remark f_X: X1 clock oscillation frequency
f_{RH}: Internal high-speed oscillation clock frequency
f_{EXCLK}: External main system clock frequency
f_{XH}: High-speed system clock frequency
f_{XP}: Main system clock frequency
f_{PRS}: Peripheral hardware clock frequency
f_{CPU}: CPU clock frequency
f_{XT}: XT1 clock oscillation frequency
f_{EXCLKS}: External subsystem clock frequency
f_{SUB}: Subsystem clock frequency
f_{RL}: Internal low-speed oscillation clock frequency

6.3 Registers Controlling Clock Generator

The following seven registers are used to control the clock generator.

- Clock operation mode select register (OSCCTL)
- Processor clock control register (PCC)
- Internal oscillation mode register (RCM)
- Main OSC control register (MOC)
- Main clock mode register (MCM)
- Oscillation stabilization time counter status register (OSTC)
- Oscillation stabilization time select register (OSTS)

(1) Clock operation mode select register (OSCCTL)

This register selects the operation modes of the high-speed system and subsystem clocks, and the gain of the on-chip oscillator.

OSCCTL can be set by a 1-bit or 8-bit memory manipulation instruction.

Reset signal generation clears this register to 00H.

Figure 6-3. Format of Clock Operation Mode Select Register (OSCCTL) (78K0/KB2)

Address: FF9FH After reset: 00H R/W

Symbol	<7>	<6>	5	4	3	2	1	<0>
OSCCTL	EXCLK	OSCSEL	0	0	0	0	0	AMPH

EXCLK	OSCSEL	High-speed system clock pin operation mode	P121/X1 pin	P122/X2/EXCLK pin
0	0	I/O port mode	I/O port	
0	1	X1 oscillation mode	Crystal/ceramic resonator connection	
1	0	I/O port mode	I/O port	
1	1	External clock input mode	I/O port	External clock input

AMPH	Operating frequency control
0	1 MHz ≤ f_{XH} ≤ 10 MHz
1	10 MHz < f_{XH} ≤ 20 MHz

Cautions 1. Be sure to set AMPH to 1 if the high-speed system clock oscillation frequency exceeds 10 MHz.

<R> **2. Set AMPH before setting the main clock mode register (MCM).**

3. Set AMPH before setting the peripheral functions after a reset release. The value of AMPH can be changed only once after a reset release. When the high-speed system clock (X1 oscillation) is selected as the CPU clock, supply of the CPU clock is stopped for 4.06 to 16.12 μs after AMPH is set to 1. When the high-speed system clock (external clock input) is selected as the CPU clock, supply of the CPU clock is stopped for the duration of 160 external clocks after AMPH is set to 1.

4. If the STOP instruction is executed when AMPH = 1, supply of the CPU clock is stopped for 4.06 to 16.12 μs after the STOP mode is released when the internal high-speed oscillation clock is selected as the CPU clock, or for the duration of 160 external clocks when the high-speed system clock (external clock input) is selected as the CPU clock. When the high-speed system clock (X1 oscillation) is selected as the CPU clock, the oscillation stabilization time is counted after the STOP mode is released.

5. To change the value of EXCLK and OSCSEL, be sure to confirm that bit 7 (MSTOP) of the main OSC control register (MOC) is 1 (the X1 oscillator stops or the external clock from the EXCLK pin is disabled).

6. Be sure to clear bits 1 to 5 to 0.

Remark f_{XH}: High-speed system clock oscillation frequency

Figure 6-4. Format of Clock Operation Mode Select Register (OSCCTL)
(78K0/KC2, 78K0/KD2, 78K0/KE2, and 78K0/KF2)

Address: FF9FH After reset: 00H R/W

Symbol	<7>	<6>	<5>	<4>	3	2	1	<0>
OSCCTL	EXCLK	OSCSEL	EXCLKS[Note]	OSCSELS[Note]	0	0	0	AMPH

EXCLK	OSCSEL	High-speed system clock pin operation mode	P121/X1 pin	P122/X2/EXCLK pin
0	0	I/O port mode	I/O port	
0	1	X1 oscillation mode	Crystal/ceramic resonator connection	
1	0	I/O port mode	I/O port	
1	1	External clock input mode	I/O port	External clock input

AMPH	Operating frequency control
0	1 MHz ≤ f_{XH} ≤ 10 MHz
1	10 MHz < f_{XH} ≤ 20 MHz

Note EXCLKS and OSCSELS are used in combination with XTSTART (bit 6 of the processor clock control register (PCC)). See **(3) Setting of operation mode for subsystem clock pin**.

Cautions 1. Be sure to set AMPH to 1 if the high-speed system clock oscillation frequency exceeds 10 MHz.

<R> **2. Set AMPH before setting the main clock mode register (MCM).**

3. Set AMPH before setting the peripheral functions after a reset release. The value of AMPH can be changed only once after a reset release. When the high-speed system clock (X1 oscillation) is selected as the CPU clock, supply of the CPU clock is stopped for 4.06 to 16.12 μs after AMPH is set to 1. When the high-speed system clock (external clock input) is selected as the CPU clock, supply of the CPU clock is stopped for the duration of 160 external clocks after AMPH is set to 1.

4. If the STOP instruction is executed when AMPH = 1, supply of the CPU clock is stopped for 4.06 to 16.12 μs after the STOP mode is released when the internal high-speed oscillation clock is selected as the CPU clock, or for the duration of 160 external clocks when the high-speed system clock (external clock input) is selected as the CPU clock. When the high-speed system clock (X1 oscillation) is selected as the CPU clock, the oscillation stabilization time is counted after the STOP mode is released.

5. To change the value of EXCLK and OSCSEL, be sure to confirm that bit 7 (MSTOP) of the main OSC control register (MOC) is 1 (the X1 oscillator stops or the external clock from the EXCLK pin is disabled).

6. Be sure to clear bits 1 to 3 to 0.

Remark f_{XH}: High-speed system clock oscillation frequency

(2) Processor clock control register (PCC)

This register is used to select the CPU clock, the division ratio, and operation mode for subsystem clock.

PCC is set by a 1-bit or 8-bit memory manipulation instruction.

Reset signal generation sets PCC to 01H.

Figure 6-5. Format of Processor Clock Control Register (PCC) (78K0/KB2)

Address: FFFBH After reset: 01H R/W

Symbol	7	6	5	4	3	2	1	0
PCC	0	0	0	0	0	PCC2	PCC1	PCC0

PCC2	PCC1	PCC0	CPU clock (f_{CPU}) selection
0	0	0	f_{XP}
0	0	1	$f_{XP}/2$ (default)
0	1	0	$f_{XP}/2^2$
0	1	1	$f_{XP}/2^3$
1	0	0	$f_{XP}/2^4$
Other than above			Setting prohibited

Cautions 1. Be sure to clear bits 3 to 7 to 0.

2. The peripheral hardware clock (f_{PRS}) is not divided when the division ratio of the PCC is set.

Remark f_{XP}: Main system clock oscillation frequency

Figure 6-6. Format of Processor Clock Control Register (PCC)
(78K0/KC2, 78K0/KD2, 78K0/KE2, and 78K0/KF2)

Address: FFFBH After reset: 01H R/W[Note 1]

Symbol	7	6	<5>	<4>	3	2	1	0
PCC	0	XTSTART[Note2]	CLS	CSS	0	PCC2	PCC1	PCC0

CLS	CPU clock status
0	Main system clock
1	Subsystem clock

CSS	PCC2	PCC1	PCC0	CPU clock (f_{CPU}) selection
0	0	0	0	f_{XP}
	0	0	1	f_{XP}/2 (default)
	0	1	0	$f_{XP}/2^2$
	0	1	1	$f_{XP}/2^3$
	1	0	0	$f_{XP}/2^4$
1	0	0	0	f_{SUB}/2
	0	0	1	
	0	1	0	
	0	1	1	
	1	0	0	
Other than above				Setting prohibited

Notes 1. Bit 5 is read-only.

2. XTSTART is used in combination with EXCLKS and OSCSELS (bits 5 and 4 of the clock operation mode select register (OSCCTL)). See **(3) Setting of operation mode for subsystem clock pin**.

Cautions 1. Be sure to clear bits 3 and 7 to "0".

2. The peripheral hardware clock (f_{PRS}) is not divided when the division ratio of the PCC is set.

Remark f_{XP}: Main system clock oscillation frequency
f_{SUB}: Subsystem clock oscillation frequency

The fastest instruction can be executed in 2 clocks of the CPU clock in the 78K0/Kx2 microcontrollers. Therefore, the relationship between the CPU clock (f_{CPU}) and the minimum instruction execution time is as shown in Table 6-2.

Table 6-2. Relationship Between CPU Clock and Minimum Instruction Execution Time

CPU Clock (f_{CPU})	Minimum Instruction Execution Time: $2/f_{CPU}$			
	Main System Clock			Subsystem Clock[Note 2]
	High-Speed System Clock[Note 1]		Internal High-Speed Oscillation Clock[Note 1]	
	At 10 MHz Operation	At 20 MHz Operation	At 8 MHz (TYP.) Operation	At 32.768 kHz Operation
f_{XP}	0.2 μs	0.1 μs	0.25 μs (TYP.)	–
$f_{XP}/2$	0.4 μs	0.2 μs	0.5 μs (TYP.)	–
$f_{XP}/2^2$	0.8 μs	0.4 μs	1.0 μs (TYP.)	–
$f_{XP}/2^3$	1.6 μs	0.8 μs	2.0 μs (TYP.)	–
$f_{XP}/2^4$	3.2 μs	1.6 μs	4.0 μs (TYP.)	–
$f_{SUB}/2$[Note 2]	–		–	122.1 μs

Notes 1. The main clock mode register (MCM) is used to set the main system clock supplied to CPU clock (high-speed system clock/internal high-speed oscillation clock) (see **Figure 6-9**).

2. The 78K0/KB2 is not provided with a subsystem clock.

(3) Setting of operation mode for subsystem clock pin

The operation mode for the subsystem clock pin[Note] can be set by using bit 6 (XTSTART) of the processor clock control register (PCC) and bits 5 and 4 (EXCLKS, OSCSELS) of the clock operation mode select register (OSCCTL) in combination.

Note The 78K0/KB2 is not provided with a subsystem clock.

Table 6-3. Setting of Operation Mode for Subsystem Clock Pin (78K0/KC2, 78K0/KD2, 78K0/KE2, 78K0/KF2)

PCC	OSCCTL		Subsystem Clock Pin Operation Mode	P123/XT1 Pin	P124/XT2/EXCLKS Pin
Bit 6	Bit 5	Bit 4			
XTSTART	EXCLKS	OSCSELS			
0	0	0	I/O port mode	I/O port	
0	0	1	XT1 oscillation mode	Crystal resonator connection	
0	1	0	I/O port mode	I/O port	
0	1	1	External clock input mode	I/O port	External clock input
1	×	×	XT1 oscillation mode	Crystal resonator connection	

Caution Confirm that bit 5 (CLS) of the processor clock control register (PCC) is 0 (CPU is operating with main system clock) when changing the current values of XTSTART, EXCLKS, and OSCSELS.

Remark ×: don't care

(4) Internal oscillation mode register (RCM)

This register sets the operation mode of internal oscillator.

RCM can be set by a 1-bit or 8-bit memory manipulation instruction.

Reset signal generation sets this register to 80H[Note 1].

Figure 6-7. Format of Internal Oscillation Mode Register (RCM)

Address: FFA0H After reset: 80H[Note 1] R/W[Note 2]

Symbol	<7>	6	5	4	3	2	<1>	<0>
RCM	RSTS	0	0	0	0	0	LSRSTOP	RSTOP

RSTS	Status of internal high-speed oscillator
0	Waiting for accuracy stabilization of internal high-speed oscillator
1	Stability operating of internal high-speed oscillator

LSRSTOP	Internal low-speed oscillator oscillating/stopped
0	Internal low-speed oscillator oscillating
1	Internal low-speed oscillator stopped

RSTOP	Internal high-speed oscillator oscillating/stopped
0	Internal high-speed oscillator oscillating
1	Internal high-speed oscillator stopped

Notes 1. The value of this register is 00H immediately after a reset release but automatically changes to 80H after internal high-speed oscillator has been stabilized.

2. Bit 7 is read-only.

Caution When setting RSTOP to 1, be sure to confirm that the CPU operates with a clock other than the internal high-speed oscillation clock. Specifically, set under either of the following conditions.

<1> 78K0/KB2

- **When MCS = 1 (when CPU operates with the high-speed system clock)**

<2> 78K0/KC2, 78K0/KD2, 78K0/KE2, and 78K0/KF2

- **When MCS = 1 (when CPU operates with the high-speed system clock)**
- **When CLS = 1 (when CPU operates with the subsystem clock)**

In addition, stop peripheral hardware that is operating on the internal high-speed oscillation clock before setting RSTOP to 1.

(5) Main OSC control register (MOC)

This register selects the operation mode of the high-speed system clock.

This register is used to stop the X1 oscillator or to disable an external clock input from the EXCLK pin when the CPU operates with a clock other than the high-speed system clock.

MOC can be set by a 1-bit or 8-bit memory manipulation instruction.

Reset signal generation sets this register to 80H.

Figure 6-8. Format of Main OSC Control Register (MOC)

Address: FFA2H After reset: 80H R/W

Symbol	<7>	6	5	4	3	2	1	0
MOC	MSTOP	0	0	0	0	0	0	0

MSTOP	Control of high-speed system clock operation	
	X1 oscillation mode	External clock input mode
0	X1 oscillator operating	External clock from EXCLK pin is enabled
1	X1 oscillator stopped	External clock from EXCLK pin is disabled

Cautions 1. When setting MSTOP to 1, be sure to confirm that the CPU operates with a clock other than the high-speed system clock. Specifically, set under either of the following conditions.

<1> 78K0/KB2

- **When MCS = 0 (when CPU operates with the internal high-speed oscillation clock)**

<2> 78K0/KC2, 78K0/KD2, 78K0/KE2, and 78K0/KF2

- **When MCS = 0 (when CPU operates with the internal high-speed oscillation clock)**
- **When CLS = 1 (when CPU operates with the subsystem clock)**

In addition, stop peripheral hardware that is operating on the high-speed system clock before setting MSTOP to 1.

2. Do not clear MSTOP to 0 while bit 6 (OSCSEL) of the clock operation mode select register (OSCCTL) is 0 (I/O port mode).

3. The peripheral hardware cannot operate when the peripheral hardware clock is stopped. To resume the operation of the peripheral hardware after the peripheral hardware clock has been stopped, initialize the peripheral hardware.

(6) Main clock mode register (MCM)

This register selects the main system clock supplied to CPU clock and clock supplied to peripheral hardware clock.

MCM can be set by a 1-bit or 8-bit memory manipulation instruction.

Reset signal generation clears this register to 00H.

Figure 6-9. Format of Main Clock Mode Register (MCM)

Address: FFA1H After reset: 00H R/W[Note]

Symbol	7	6	5	4	3	<2>	<1>	<0>
MCM	0	0	0	0	0	XSEL	MCS	MCM0

XSEL	MCM0	Selection of clock supplied to main system clock and peripheral hardware	
		Main system clock (f_{XP})	Peripheral hardware clock (f_{PRS})
0	0	Internal high-speed oscillation clock (f_{RH})	Internal high-speed oscillation clock (f_{RH})
0	1		
1	0		High-speed system clock (f_{XH})
1	1	High-speed system clock (f_{XH})	

MCS	Main system clock status
0	Operates with internal high-speed oscillation clock
1	Operates with high-speed system clock

Note Bit 1 is read-only.

Cautions 1. XSEL can be changed only once after a reset release.

2. Do not rewrite MCM0 when the CPU clock operates with the subsystem clock.

3. A clock other than f_{PRS} is supplied to the following peripheral functions regardless of the setting of XSEL and MCM0.

- **Watchdog timer (operates with internal low-speed oscillation clock)**
- **When "f_{RL}", "$f_{RL}/2^7$", or "$f_{RL}/2^9$" is selected as the count clock for 8-bit timer H1 (operates with internal low-speed oscillation clock)**
- **Peripheral hardware selects the external clock as the clock source (Except when the external count clock of TM0n (n = 0, 1) is selected (TI00n pin valid edge))**

(7) Oscillation stabilization time counter status register (OSTC)

This is the register that indicates the count status of the X1 clock oscillation stabilization time counter. When X1 clock oscillation starts with the internal high-speed oscillation clock or subsystem clock used as the CPU clock, the X1 clock oscillation stabilization time can be checked.

OSTC can be read by a 1-bit or 8-bit memory manipulation instruction.

When reset is released (reset by $\overline{\text{RESET}}$ input, POC, LVI, and WDT), the STOP instruction and MSTOP (bit 7 of MOC register) = 1 clear OSTC to 00H.

Figure 6-10. Format of Oscillation Stabilization Time Counter Status Register (OSTC)

Address: FFA3H After reset: 00H R

Symbol	7	6	5	4	3	2	1	0
OSTC	0	0	0	MOST11	MOST13	MOST14	MOST15	MOST16

MOST11	MOST13	MOST14	MOST15	MOST16	Oscillation stabilization time status		
						f_X = 10 MHz	f_X = 20 MHz
1	0	0	0	0	$2^{11}/f_X$ min.	204.8 μs min.	102.4 μs min.
1	1	0	0	0	$2^{13}/f_X$ min.	819.2 μs min.	409.6 μs min.
1	1	1	0	0	$2^{14}/f_X$ min.	1.64 ms min.	819.2 μs min.
1	1	1	1	0	$2^{15}/f_X$ min.	3.27 ms min.	1.64 ms min.
1	1	1	1	1	$2^{16}/f_X$ min.	6.55 ms min.	3.27 ms min.

Cautions 1. After the above time has elapsed, the bits are set to 1 in order from MOST11 and remain 1.

2. The oscillation stabilization time counter counts up to the oscillation stabilization time set by OSTS. If the STOP mode is entered and then released while the internal high-speed oscillation clock is being used as the CPU clock, set the oscillation stabilization time as follows.

- **Desired OSTC oscillation stabilization time ≤ Oscillation stabilization time set by OSTS**

Note, therefore, that only the status up to the oscillation stabilization time set by OSTS is set to OSTC after STOP mode is released.

3. The X1 clock oscillation stabilization wait time does not include the time until clock oscillation starts ("a" below).

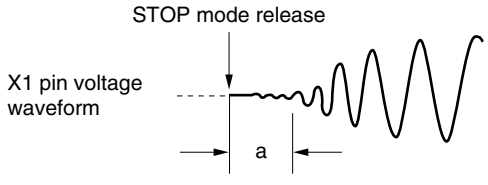

Remark f_X: X1 clock oscillation frequency

(8) Oscillation stabilization time select register (OSTS)

This register is used to select the X1 clock oscillation stabilization wait time when the STOP mode is released.

When the X1 clock is selected as the CPU clock, the operation waits for the time set using OSTS after the STOP mode is released.

When the internal high-speed oscillation clock is selected as the CPU clock, confirm with OSTC that the desired oscillation stabilization time has elapsed after the STOP mode is released. The oscillation stabilization time can be checked up to the time set using OSTC.

OSTS can be set by an 8-bit memory manipulation instruction.

Reset signal generation sets OSTS to 05H.

Figure 6-11. Format of Oscillation Stabilization Time Select Register (OSTS)

Address: FFA4H After reset: 05H R/W

Symbol	7	6	5	4	3	2	1	0
OSTS	0	0	0	0	0	OSTS2	OSTS1	OSTS0

OSTS2	OSTS1	OSTS0	Oscillation stabilization time selection		
				fx = 10 MHz	fx = 20 MHz
0	0	1	2^{11}/fx	204.8 μs	102.4 μs
0	1	0	2^{13}/fx	819.2 μs	409.6 μs
0	1	1	2^{14}/fx	1.64 ms	819.2 μs
1	0	0	2^{15}/fx	3.27 ms	1.64 ms
1	0	1	2^{16}/fx	6.55 ms	3.27 ms
Other than above			Setting prohibited		

Cautions 1. To set the STOP mode when the X1 clock is used as the CPU clock, set OSTS before executing the STOP instruction.

2. Do not change the value of the OSTS register during the X1 clock oscillation stabilization time.

3. The oscillation stabilization time counter counts up to the oscillation stabilization time set by OSTS. If the STOP mode is entered and then released while the internal high-speed oscillation clock is being used as the CPU clock, set the oscillation stabilization time as follows.

- **Desired OSTC oscillation stabilization time ≤ Oscillation stabilization time set by OSTS**

Note, therefore, that only the status up to the oscillation stabilization time set by OSTS is set to OSTC after STOP mode is released.

4. The X1 clock oscillation stabilization wait time does not include the time until clock oscillation starts ("a" below).

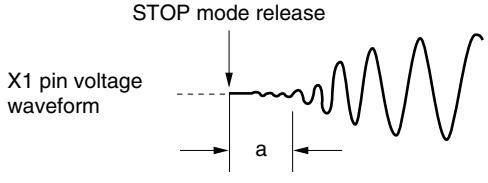

Remark fx: X1 clock oscillation frequency

6.4 System Clock Oscillator

6.4.1 X1 oscillator

The X1 oscillator oscillates with a crystal resonator or ceramic resonator (1 to 20 MHz) connected to the X1 and X2 pins.

An external clock can also be input. In this case, input the clock signal to the EXCLK pin.

Figure 6-12 shows an example of the external circuit of the X1 oscillator.

Figure 6-12. Example of External Circuit of X1 Oscillator

(a) Crystal or ceramic oscillation

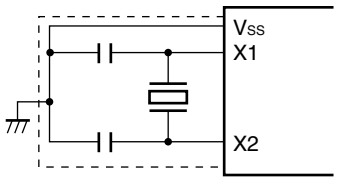

(b) External clock

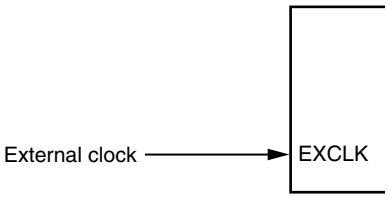

Cautions are listed on the next page.

6.4.2 XT1 oscillator

The XT1 oscillator[Note] oscillates with a crystal resonator (standard: 32.768 kHz) connected to the XT1 and XT2 pins.

An external clock can also be input. In this case, input the clock signal to the EXCLKS pin.

Figure 6-13 shows an example of the external circuit of the XT1 oscillator.

Note The 78K0/KB2 is not provided with an XT1 oscillator.

Figure 6-13. Example of External Circuit of XT1 Oscillator

(a) Crystal oscillation

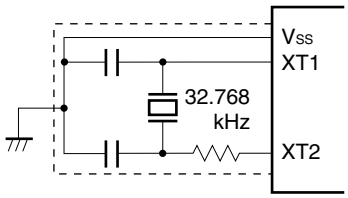

(b) External clock

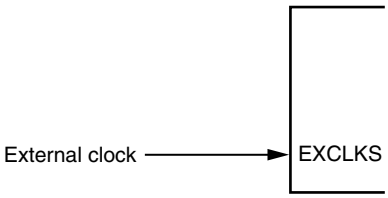

Cautions are listed on the next page.

Caution 1. When using the X1 oscillator and XT1 oscillator, wire as follows in the area enclosed by the broken lines in the Figures 6-12 and 6-13 to avoid an adverse effect from wiring capacitance.

- **Keep the wiring length as short as possible.**
- **Do not cross the wiring with the other signal lines. Do not route the wiring near a signal line through which a high fluctuating current flows.**
- **Always make the ground point of the oscillator capacitor the same potential as V_{SS}. Do not ground the capacitor to a ground pattern through which a high current flows.**
- **Do not fetch signals from the oscillator.**

Note that the XT1 oscillator is designed as a low-amplitude circuit for reducing power consumption.

Figure 6-14 shows examples of incorrect resonator connection.

Figure 6-14. Examples of Incorrect Resonator Connection (1/2)

(a) Too long wiring **(b) Crossed signal line**

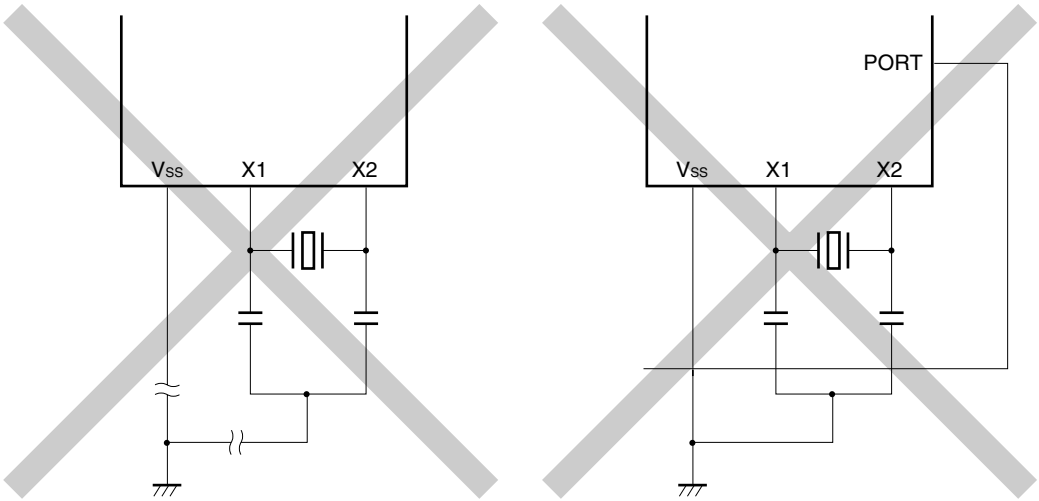

Remark When using the subsystem clock, replace X1 and X2 with XT1 and XT2, respectively. Also, insert resistors in series on the XT2 side.

Figure 6-14. Examples of Incorrect Resonator Connection (2/2)

(c) Wiring near high alternating current

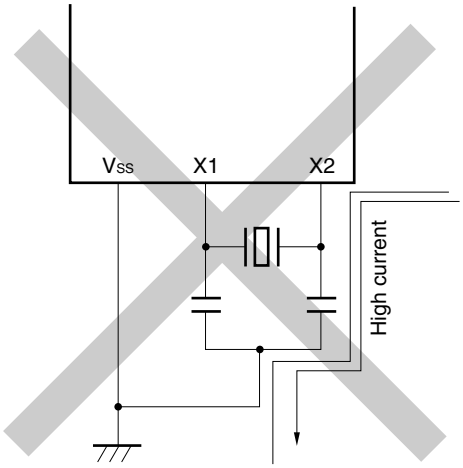

(d) Current flowing through ground line of oscillator (potential at points A, B, and C fluctuates)

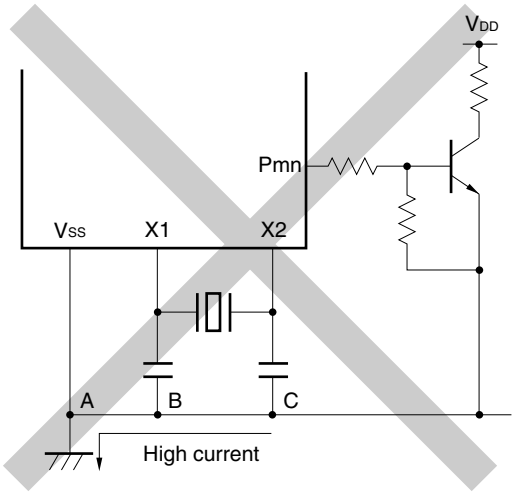

(e) Signals are fetched

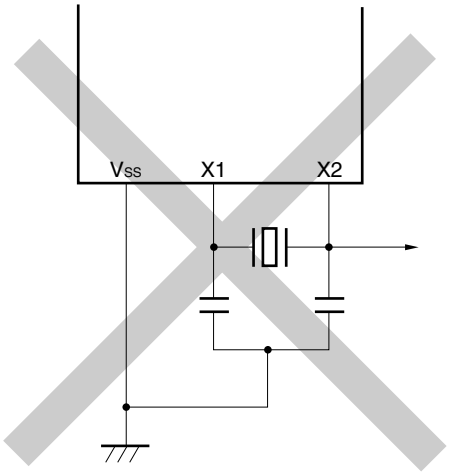

Remark When using the subsystem clock, replace X1 and X2 with XT1 and XT2, respectively. Also, insert resistors in series on the XT2 side.

Caution 2. When X2 and XT1 are wired in parallel, the crosstalk noise of X2 may increase with XT1, resulting in malfunctioning.

6.4.3 When subsystem clock is not used

If it is not necessary to use the subsystem clock[Note] for low power consumption operations, or if not using the subsystem clock as an I/O port, set the XT1 and XT2 pins to I/O mode (OSCSELS = 0) and connect them as follows.

Note The 78K0/KB2 is not provided with a subsystem clock.

Input (PM123/PM124 = 1): Independently connect to V_{DD} or V_{SS} via a resistor.
Output (PM123/PM124 = 0): Leave open.

Remark OSCSELS: Bit 4 of clock operation mode select register (OSCCTL)
PM123, PM124: Bits 3 and 4 of port mode register 12 (PM12)

6.4.4 Internal high-speed oscillator

The internal high-speed oscillator is incorporated in the 78K0/Kx2 microcontrollers. Oscillation can be controlled by the internal oscillation mode register (RCM).

After a reset release, the internal high-speed oscillator automatically starts oscillation (8 MHz (TYP.)).

6.4.5 Internal low-speed oscillator

The internal low-speed oscillator is incorporated in the 78K0/Kx2 microcontrollers.

The internal low-speed oscillation clock is only used as the watchdog timer and the clock of 8-bit timer H1. The internal low-speed oscillation clock cannot be used as the CPU clock.

“Can be stopped by software” or “Cannot be stopped” can be selected by the option byte. When “Can be stopped by software” is set, oscillation can be controlled by the internal oscillation mode register (RCM).

After a reset release, the internal low-speed oscillator automatically starts oscillation, and the watchdog timer is driven (240 kHz (TYP.)) if the watchdog timer operation is enabled using the option byte.

6.4.6 Prescaler

The prescaler generates the CPU clock by dividing the main system clock when the main system clock is selected as the clock to be supplied to the CPU.

6.5 Clock Generator Operation

The clock generator generates the following clocks and controls the operation modes of the CPU, such as standby mode (see **Figure 6-1** and **6-2**).

- Main system clock f_{XP}
  - High-speed system clock f_{XH}
    X1 clock f_X
    External main system clock f_{EXCLK}
  - Internal high-speed oscillation clock f_{RH}
- Subsystem clock f_{SUB} Note
  - XT1 clock f_{XT}
  - External subsystem clock f_{EXCLKS}
- Internal low-speed oscillation clock f_{RL}
- CPU clock f_{CPU}
- Peripheral hardware clock f_{PRS}

Note The 78K0/KB2 is not provided with a subsystem clock.

The CPU starts operation when the internal high-speed oscillator starts outputting after a reset release in the 78K0/Kx2 microcontrollers, thus enabling the following.

(1) Enhancement of security function

When the X1 clock is set as the CPU clock by the default setting, the device cannot operate if the X1 clock is damaged or badly connected and therefore does not operate after reset is released. However, the start clock of the CPU is the internal high-speed oscillation clock, so the device can be started by the internal high-speed oscillation clock after a reset release. Consequently, the system can be safely shut down by performing a minimum operation, such as acknowledging a reset source by software or performing safety processing when there is a malfunction.

(2) Improvement of performance

Because the CPU can be started without waiting for the X1 clock oscillation stabilization time, the total performance can be improved.

When the power supply voltage is turned on, the clock generator operation is shown in Figure 6-15.

Figure 6-15. Clock Generator Operation When Power Supply Voltage Is Turned On (When 1.59 V POC Mode Is Set (Option Byte: POCMODE = 0))

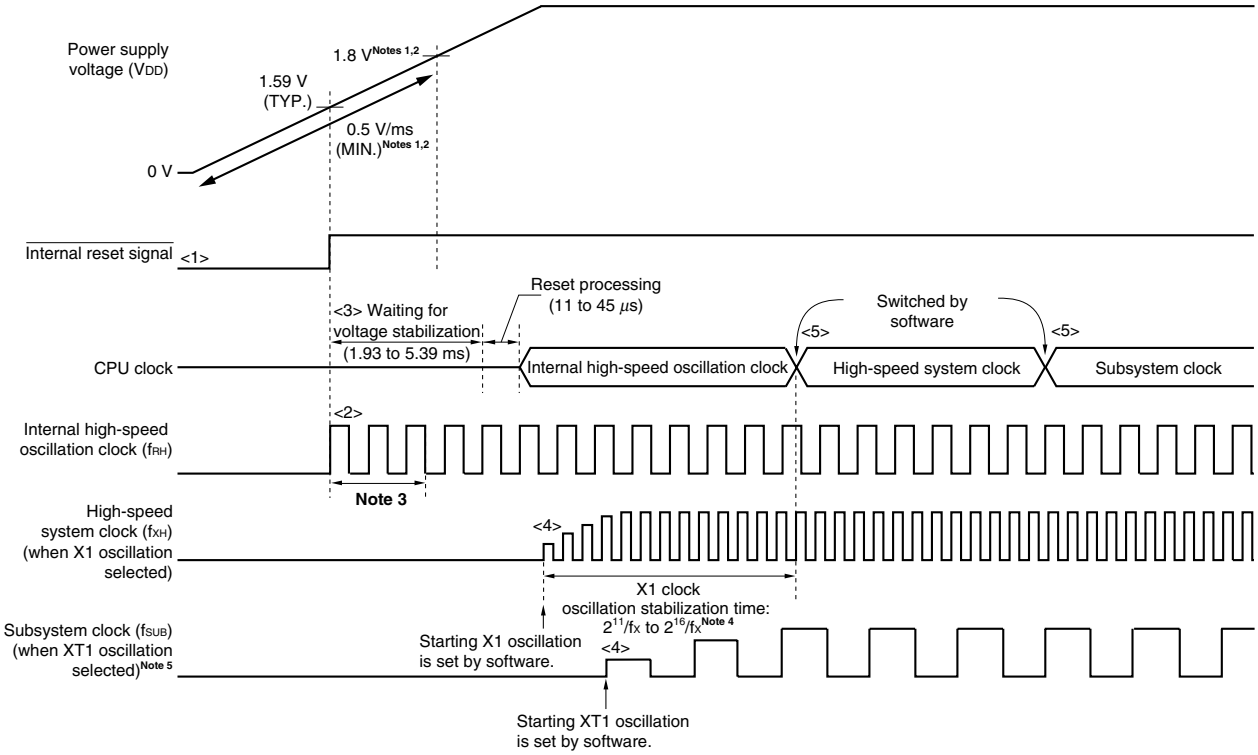

<1> When the power is turned on, an internal reset signal is generated by the power-on-clear (POC) circuit.

<2> When the power supply voltage exceeds 1.59 V (TYP.), the reset is released and the internal high-speed oscillator automatically starts oscillation.

<3> When the power supply voltage rises with a slope of 0.5 V/ms (MIN.), the CPU starts operation on the internal high-speed oscillation clock after the reset is released and after the stabilization times for the voltage of the power supply and regulator have elapsed, and then reset processing is performed.

<4> Set the start of oscillation of the X1 or XT1 clock via software (see **(1)** in **6.6.1 Example of controlling high-speed system clock** and **(1)** in **6.6.3 Example of controlling subsystem clock)**.

<5> When switching the CPU clock to the X1 or XT1 clock, wait for the clock oscillation to stabilize, and then set switching via software (see **(3)** in **6.6.1 Example of controlling high-speed system clock** and **(3)** in **6.6.3 Example of controlling subsystem clock**).

Notes 1. With standard and (A) grade products, if the voltage rises with a slope of less than 0.5 V/ms (MIN.) from power application until the voltage reaches 1.8 V, input a low level to the $\overline{\text{RESET}}$ pin from power application until the voltage reaches 1.8 V, or set the 2.7 V/1.59 V POC mode by using the option byte (POCMODE = 1) (see **Figure 6-16**). When a low level has been input to the $\overline{\text{RESET}}$ pin until the voltage reaches 1.8 V, the CPU operates with the same timing as <2> and thereafter in Figure 6-15, after the reset has been released by the $\overline{\text{RESET}}$ pin.

2. With (A2) grade products, if the voltage rises with a slope of less than 0.75 V/ms (MIN.) from power application until the voltage reaches 2.7 V, input a low level to the $\overline{\text{RESET}}$ pin from power application until the voltage reaches 2.7 V. When a low level has been input to the $\overline{\text{RESET}}$ pin until the voltage reaches 2.7 V, the CPU operates with the same timing as <2> and thereafter in Figure 6-15, after the reset has been released by the $\overline{\text{RESET}}$ pin.

3. The internal voltage stabilization time includes the oscillation accuracy stabilization time of the internal high-speed oscillation clock.

Notes 4. When releasing a reset (above figure) or releasing STOP mode while the CPU is operating on the internal high-speed oscillation clock, confirm the oscillation stabilization time for the X1 clock using the oscillation stabilization time counter status register (OSTC). If the CPU operates on the high-speed system clock (X1 oscillation), set the oscillation stabilization time when releasing STOP mode using the oscillation stabilization time select register (OSTS).

5. The 78K0/KB2 is not provided with a subsystem clock.

Caution It is not necessary to wait for the oscillation stabilization time when an external clock input from the EXCLK and EXCLKS pins is used.

Remark While the microcontroller is operating, a clock that is not used as the CPU clock can be stopped via software settings. The internal high-speed oscillation clock and high-speed system clock can be stopped by executing the STOP instruction (see **(4)** in **6.6.1 Example of controlling high-speed system clock**, **(3)** in **6.6.2 Example of controlling internal high-speed oscillation clock**, and **(4)** in **6.6.3 Example of controlling subsystem clock**).

Figure 6-16. Clock Generator Operation When Power Supply Voltage Is Turned On (When 2.7 V/1.59 V POC Mode Is Set (Option Byte: POCMODE = 1))

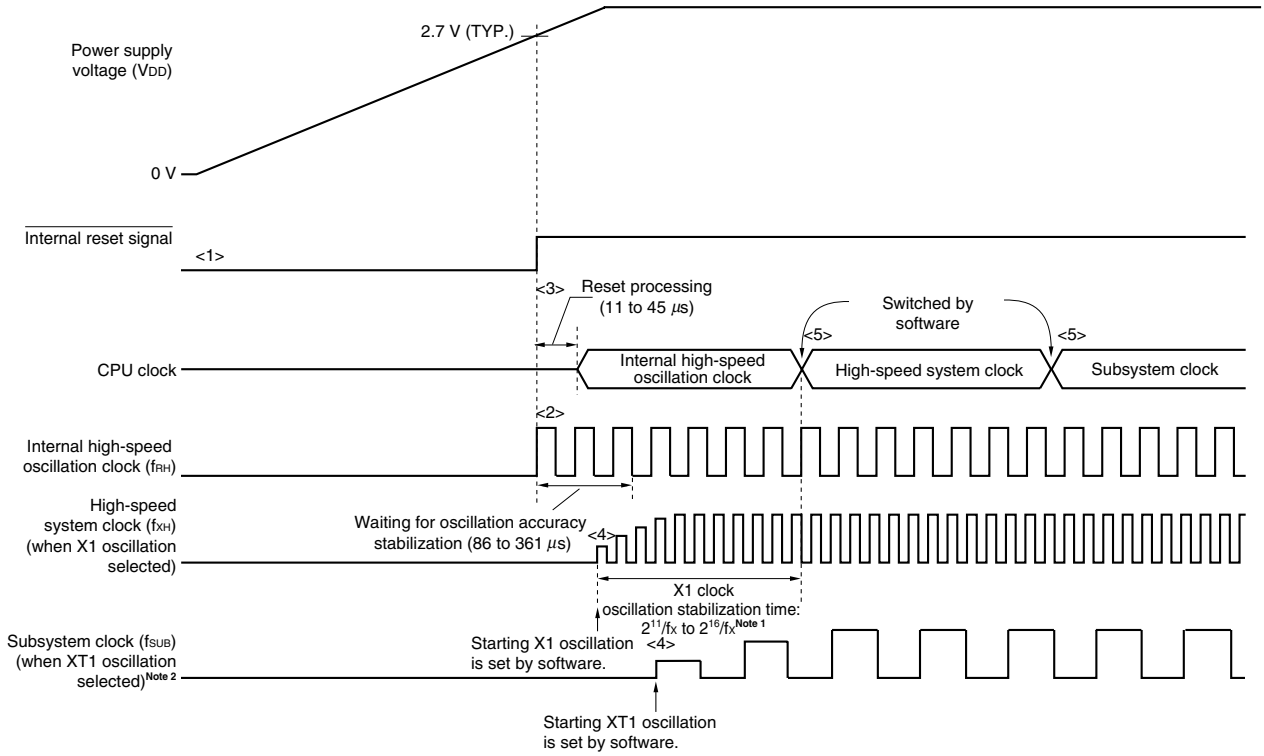

<1> When the power is turned on, an internal reset signal is generated by the power-on-clear (POC) circuit.

<2> When the power supply voltage exceeds 2.7 V (TYP.), the reset is released and the internal high-speed oscillator automatically starts oscillation.

<3> After the reset is released and reset processing is performed, the CPU starts operation on the internal high-speed oscillation clock.

<4> Set the start of oscillation of the X1 or XT1 clock via software (see **(1)** in **6.6.1 Example of controlling high-speed system clock** and **(1)** in **6.6.3 Example of controlling subsystem clock**).

<5> When switching the CPU clock to the X1 or XT1 clock, wait for the clock oscillation to stabilize, and then set switching via software (see **(3)** in **6.6.1 Example of controlling high-speed system clock** and **(3)** in **6.6.3 Example of controlling subsystem clock**).

Notes 1. When releasing a reset (above figure) or releasing STOP mode while the CPU is operating on the internal high-speed oscillation clock, confirm the oscillation stabilization time for the X1 clock using the oscillation stabilization time counter status register (OSTC). If the CPU operates on the high-speed system clock (X1 oscillation), set the oscillation stabilization time when releasing STOP mode using the oscillation stabilization time select register (OSTS).

2. The 78K0/KB2 is not provided with a subsystem clock.

Cautions 1. A voltage oscillation stabilization time of 1.93 to 5.39 ms is required after the supply voltage reaches 1.59 V (TYP.). If the supply voltage rises from 1.59 V (TYP.) to 2.7 V (TYP.) within 1.93 ms, the power supply oscillation stabilization time of 0 to 5.39 ms is automatically generated before reset processing.

2. It is not necessary to wait for the oscillation stabilization time when an external clock input from the EXCLK and EXCLKS pins is used.

Remark While the microcontroller is operating, a clock that is not used as the CPU clock can be stopped via software settings. The internal high-speed oscillation clock and high-speed system clock can be stopped by executing the STOP instruction (see **(4)** in **6.6.1 Example of controlling high-speed system clock**, **(3)** in **6.6.2 Example of controlling internal high-speed oscillation clock**, and **(4)** in **6.6.3 Example of controlling subsystem clock**).

6.6 Controlling Clock

6.6.1 Example of controlling high-speed system clock

The following two types of high-speed system clocks are available.

- X1 clock: Crystal/ceramic resonator is connected across the X1 and X2 pins.
- External main system clock: External clock is input to the EXCLK pin.

When the high-speed system clock is not used, the X1/P121 and X2/EXCLK/P122 pins can be used as I/O port pins.

Caution The X1/P121 and X2/EXCLK/P122 pins are in the I/O port mode after a reset release.

The following describes examples of setting procedures for the following cases.

(1) When oscillating X1 clock
(2) When using external main system clock
(3) When using high-speed system clock as CPU clock and peripheral hardware clock
(4) When stopping high-speed system clock

(1) Example of setting procedure when oscillating the X1 clock

<1> Setting frequency (OSCCTL register)
Using AMPH, set the gain of the on-chip oscillator according to the frequency to be used.

AMPH[Note]	Operating Frequency Control
0	1 MHz ≤ f_{XH} ≤ 10 MHz
1	10 MHz < f_{XH} ≤ 20 MHz

Note Set AMPH before setting the peripheral functions after a reset release. The value of AMPH can be changed only once after a reset release. When AMPH is set to 1, the clock supply to the CPU is stopped for 4.06 to 16.12 μs.

Remark f_{XH}: High-speed system clock oscillation frequency

<2> Setting P121/X1 and P122/X2/EXCLK pins and selecting X1 clock or external clock (OSCCTL register)
When EXCLK is cleared to 0 and OSCSEL is set to 1, the mode is switched from port mode to X1 oscillation mode.

EXCLK	OSCSEL	Operation Mode of High-Speed System Clock Pin	P121/X1 Pin	P122/X2/EXCLK Pin
0	1	X1 oscillation mode	Crystal/ceramic resonator connection	

<3> Controlling oscillation of X1 clock (MOC register)
If MSTOP is cleared to 0, the X1 oscillator starts oscillating.

<4> Waiting for the stabilization of the oscillation of X1 clock
Check the OSTC register and wait for the necessary time.
During the wait time, other software processing can be executed with the internal high-speed oscillation clock.

Cautions 1. Do not change the value of EXCLK and OSCSEL while the X1 clock is operating.
2. Set the X1 clock after the supply voltage has reached the operable voltage of the clock to be used (see CHAPTER 30 ELECTRICAL SPECIFICATIONS (STANDARD PRODUCTS) to CHAPTER 33 ELECTRICAL SPECIFICATIONS ((A2) GRADE PRODUCTS: T_A = –40 to +125°C)).

(2) Example of setting procedure when using the external main system clock

<1> Setting frequency (OSCCTL register)
Using AMPH, set the frequency to be used.

AMPH[Note]	Operating Frequency Control
0	1 MHz ≤ f_{XH} ≤ 10 MHz
1	10 MHz < f_{XH} ≤ 20 MHz

Note Set AMPH before setting the peripheral functions after a reset release. The value of AMPH can be changed only once after a reset release. The clock supply to the CPU is stopped for the duration of 160 external clocks after AMPH is set to 1.

Remark f_{XH}: High-speed system clock oscillation frequency

<2> Setting P121/X1 and P122/X2/EXCLK pins and selecting operation mode (OSCCTL register)
When EXCLK and OSCSEL are set to 1, the mode is switched from port mode to external clock input mode.

EXCLK	OSCSEL	Operation Mode of High-Speed System Clock Pin	P121/X1 Pin	P122/X2/EXCLK Pin
1	1	External clock input mode	I/O port	External clock input

<3> Controlling external main system clock input (MOC register)
When MSTOP is cleared to 0, the input of the external main system clock is enabled.

Cautions 1. Do not change the value of EXCLK and OSCSEL while the external main system clock is operating.
2. Set the X1 clock after the supply voltage has reached the operable voltage of the clock to be used (see CHAPTER 30 ELECTRICAL SPECIFICATIONS (STANDARD PRODUCTS) to CHAPTER 33 ELECTRICAL SPECIFICATIONS ((A2) GRADE PRODUCTS: T_A = –40 to +125°C)).

(3) Example of setting procedure when using high-speed system clock as CPU clock and peripheral hardware clock

<1> Setting high-speed system clock oscillation[Note]
(See **6.6.1 (1) Example of setting procedure when oscillating the X1 clock** and **(2) Example of setting procedure when using the external main system clock.**)

Note The setting of <1> is not necessary when high-speed system clock is already operating.

<2> Setting the high-speed system clock as the main system clock (MCM register)

When XSEL and MCM0 are set to 1, the high-speed system clock is supplied as the main system clock and peripheral hardware clock.

XSEL	MCM0	Selection of Main System Clock and Clock Supplied to Peripheral Hardware	
		Main System Clock (f_{XP})	Peripheral Hardware Clock (f_{PRS})
1	1	High-speed system clock (f_{XH})	High-speed system clock (f_{XH})

Caution If the high-speed system clock is selected as the main system clock, a clock other than the high-speed system clock cannot be set as the peripheral hardware clock.

<3> Setting the main system clock as the CPU clock and selecting the division ratio (PCC register)

When CSS is cleared to 0, the main system clock is supplied to the CPU. To select the CPU clock division ratio, use PCC0, PCC1, and PCC2.

CSS	PCC2	PCC1	PCC0	CPU Clock (f_{CPU}) Selection
0	0	0	0	f_{XP}
	0	0	1	f_{XP}/2 (default)
	0	1	0	$f_{XP}/2^2$
	0	1	1	$f_{XP}/2^3$
	1	0	0	$f_{XP}/2^4$
	Other than above			Setting prohibited

(4) Example of setting procedure when stopping the high-speed system clock

The high-speed system clock can be stopped in the following two ways.

- Executing the STOP instruction and stopping the X1 oscillation (disabling clock input if the external clock is used)
- Setting MSTOP to 1 and stopping the X1 oscillation (disabling clock input if the external clock is used)

(a) To execute a STOP instruction

<1> Setting to stop peripheral hardware

Stop peripheral hardware that cannot be used in the STOP mode (for peripheral hardware that cannot be used in STOP mode, see **CHAPTER 22 STANDBY FUNCTION**).

<2> Setting the X1 clock oscillation stabilization time after standby release

When the CPU is operating on the X1 clock, set the value of the OSTS register before the STOP instruction is executed.

<3> Executing the STOP instruction

When the STOP instruction is executed, the system is placed in the STOP mode and X1 oscillation is stopped (the input of the external clock is disabled).

(b) To stop X1 oscillation (disabling external clock input) by setting MSTOP to 1

<1> Confirming the CPU clock status (PCC and MCM registers)

Confirm with CLS and MCS that the CPU is operating on a clock other than the high-speed system clock. When CLS = 0 and MCS = 1, the high-speed system clock is supplied to the CPU, so change the CPU clock to a clock other than the high-speed system clock.

- 78K0/KB2

MCS	CPU Clock Status
0	Internal high-speed oscillation clock
1	High-speed system clock

- 78K0/KC2, 78K0/KD2, 78K0/KE2, and 78K0/KF2

CLS	MCS	CPU Clock Status
0	0	Internal high-speed oscillation clock
0	1	High-speed system clock
1	×	Subsystem clock

<2> Stopping the high-speed system clock (MOC register)

When MSTOP is set to 1, X1 oscillation is stopped (the input of the external clock is disabled).

Caution Be sure to confirm that MCS = 0 or CLS = 1 when setting MSTOP to 1. In addition, stop peripheral hardware that is operating on the high-speed system clock.

6.6.2 Example of controlling internal high-speed oscillation clock

The following describes examples of clock setting procedures for the following cases.

(1) When restarting oscillation of the internal high-speed oscillation clock
(2) When using internal high-speed oscillation clock as CPU clock, and internal high-speed oscillation clock or high-speed system clock as peripheral hardware clock
(3) When stopping the internal high-speed oscillation clock

(1) Example of setting procedure when restarting oscillation of the internal high-speed oscillation clock[Note 1]

<1> Setting restart of oscillation of the internal high-speed oscillation clock (RCM register)
When RSTOP is cleared to 0, the internal high-speed oscillation clock starts operating.

<2> Waiting for the oscillation accuracy stabilization time of internal high-speed oscillation clock (RCM register)
Wait until RSTS is set to 1[Note 2].

Notes 1. After a reset release, the internal high-speed oscillator automatically starts oscillating and the internal high-speed oscillation clock is selected as the CPU clock.

2. This wait time is not necessary if high accuracy is not necessary for the CPU clock and peripheral hardware clock.

(2) Example of setting procedure when using internal high-speed oscillation clock as CPU clock, and internal high-speed oscillation clock or high-speed system clock as peripheral hardware clock

<1> • Restarting oscillation of the internal high-speed oscillation clock[Note]
(See **6.6.2 (1) Example of setting procedure when restarting oscillation of the internal high-speed oscillation clock**).

• Oscillating the high-speed system clock[Note]
(This setting is required when using the high-speed system clock as the peripheral hardware clock. See **6.6.1 (1) Example of setting procedure when oscillating the X1 clock** and **(2) Example of setting procedure when using the external main system clock.**)

Note The setting of <1> is not necessary when the internal high-speed oscillation clock or high-speed system clock is already operating.

<2> Selecting the clock supplied as the main system clock and peripheral hardware clock (MCM register)
Set the main system clock and peripheral hardware clock using XSEL and MCM0.

XSEL	MCM0	Selection of Main System Clock and Clock Supplied to Peripheral Hardware	
		Main System Clock (f_{XP})	Peripheral Hardware Clock (f_{PRS})
0	0	Internal high-speed oscillation clock (f_{RH})	Internal high-speed oscillation clock (f_{RH})
0	1		
1	0		High-speed system clock (f_{XH})

<3> Selecting the CPU clock division ratio (PCC register)
When CSS is cleared to 0, the main system clock is supplied to the CPU. To select the CPU clock division ratio, use PCC0, PCC1, and PCC2.

CSS	PCC2	PCC1	PCC0	CPU Clock (f_{CPU}) Selection
0	0	0	0	f_{XP}
	0	0	1	$f_{XP}/2$ (default)
	0	1	0	$f_{XP}/2^2$
	0	1	1	$f_{XP}/2^3$
	1	0	0	$f_{XP}/2^4$
	Other than above			Setting prohibited

(3) Example of setting procedure when stopping the internal high-speed oscillation clock

The internal high-speed oscillation clock can be stopped in the following two ways.

- Executing the STOP instruction to set the STOP mode
- Setting RSTOP to 1 and stopping the internal high-speed oscillation clock

(a) To execute a STOP instruction

<1> Setting of peripheral hardware

Stop peripheral hardware that cannot be used in the STOP mode (for peripheral hardware that cannot be used in STOP mode, see **CHAPTER 22 STANDBY FUNCTION**).

<2> Setting the X1 clock oscillation stabilization time after standby release

When the CPU is operating on the X1 clock, set the value of the OSTS register before the STOP instruction is executed. To operate the CPU immediately after the STOP mode has been released, set MCM0 to 0, switch the CPU clock to the internal high-speed oscillation clock, and check that RSTS is 1.

<3> Executing the STOP instruction

When the STOP instruction is executed, the system is placed in the STOP mode and internal high-speed oscillation clock is stopped.

(b) To stop internal high-speed oscillation clock by setting RSTOP to 1

<1> Confirming the CPU clock status (PCC and MCM registers)

Confirm with CLS and MCS that the CPU is operating on a clock other than the internal high-speed oscillation clock.

When CLS = 0 and MCS = 0, the internal high-speed oscillation clock is supplied to the CPU, so change the CPU clock to a clock other than the internal high-speed oscillation clock.

- 78K0/KB2

MCS	CPU Clock Status
0	Internal high-speed oscillation clock
1	High-speed system clock

- 78K0/KC2, 78K0/KD2, 78K0/KE2, and 78K0/KF2

CLS	MCS	CPU Clock Status
0	0	Internal high-speed oscillation clock
0	1	High-speed system clock
1	×	Subsystem clock

<2> Stopping the internal high-speed oscillation clock (RCM register)

When RSTOP is set to 1, internal high-speed oscillation clock is stopped.

Caution Be sure to confirm that MCS = 1 or CLS = 1 when setting RSTOP to 1. In addition, stop peripheral hardware that is operating on the internal high-speed oscillation clock.

6.6.3 Example of controlling subsystem clock

The following two types of subsystem clocks[Note] are available.

- XT1 clock: Crystal/ceramic resonator is connected across the XT1 and XT2 pins.
- External subsystem clock: External clock is input to the EXCLKS pin.

When the subsystem clock is not used, the XT1/P123 and XT2/EXCLKS/P124 pins can be used as I/O port pins.

Note The 78K0/KB2 is not provided with a subsystem clock.

Cautions 1. The XT1/P123 and XT2/EXCLKS/P124 pins are in the I/O port mode after a reset release.

2. Do not start the peripheral hardware operation with the external clock from peripheral hardware pins when the internal high-speed oscillation clock and high-speed system clock are stopped while the CPU operates with the subsystem clock, or when in the STOP mode.

The following describes examples of setting procedures for the following cases.

(1) When oscillating XT1 clock
(2) When using external subsystem clock
(3) When using subsystem clock as CPU clock
(4) When stopping subsystem clock

(1) Example of setting procedure when oscillating the XT1 clock

<1> Setting XT1 and XT2 pins and selecting operation mode (PCC and OSCCTL registers)
When XTSTART, EXCLKS, and OSCSELS are set as any of the following, the mode is switched from port mode to XT1 oscillation mode.

XTSTART	EXCLKS	OSCSELS	Operation Mode of Subsystem Clock Pin	P123/XT1 Pin	P124/XT2/ EXCLKS Pin
0	0	1	XT1 oscillation mode	Crystal/ceramic resonator connection	
1	×	×			

Remark ×: don't care

<2> Waiting for the stabilization of the subsystem clock oscillation
Wait for the oscillation stabilization time of the subsystem clock by software, using a timer function.

Caution Do not change the value of XTSTART, EXCLKS, and OSCSELS while the subsystem clock is operating.

(2) Example of setting procedure when using the external subsystem clock

<1> Setting XT1 and XT2 pins, selecting XT1 clock/external clock and controlling oscillation (PCC and OSCCTL registers)
When XTSTART is cleared to 0 and EXCLKS and OSCSELS are set to 1, the mode is switched from port mode to external clock input mode. In this case, input the external clock to the EXCLKS/XT2/P124 pins.

XTSTART	EXCLKS	OSCSELS	Operation Mode of Subsystem Clock Pin	P123/XT1 Pin	P124/XT2/ EXCLKS Pin
0	1	1	External clock input mode	I/O port	External clock input

Caution Do not change the value of XTSTART, EXCLKS, and OSCSELS while the subsystem clock is operating.

(3) Example of setting procedure when using the subsystem clock as the CPU clock

<1> Setting subsystem clock oscillation[Note]

(See **6.6.3 (1) Example of setting procedure when oscillating the XT1 clock** and **(2) Example of setting procedure when using the external subsystem clock**.)

Note The setting of <1> is not necessary when while the subsystem clock is operating.

<2> Switching the CPU clock (PCC register)

When CSS is set to 1, the subsystem clock is supplied to the CPU.

CSS	PCC2	PCC1	PCC0	CPU Clock (f_{CPU}) Selection
1	0	0	0	f_{SUB}/2
	0	0	1	
	0	1	0	
	0	1	1	
	1	0	0	
	Other than above			Setting prohibited

(4) Example of setting procedure when stopping the subsystem clock

<1> Confirming the CPU clock status (PCC and MCM registers)

Confirm with CLS and MCS that the CPU is operating on a clock other than the subsystem clock.

When CLS = 1, the subsystem clock is supplied to the CPU, so change the CPU clock to a clock other than the subsystem clock.

CLS	MCS	CPU Clock Status
0	0	Internal high-speed oscillation clock
0	1	High-speed system clock
1	×	Subsystem clock

<2> Stopping the subsystem clock (OSCCTL register)

When OSCSELS is cleared to 0, XT1 oscillation is stopped (the input of the external clock is disabled).

Cautions 1. Be sure to confirm that CLS = 0 when clearing OSCSELS to 0. In addition, stop the watch timer if it is operating on the subsystem clock.

2. The subsystem clock oscillation cannot be stopped using the STOP instruction.

6.6.4 Example of controlling internal low-speed oscillation clock

The internal low-speed oscillation clock cannot be used as the CPU clock.

Only the following peripheral hardware can operate with this clock.

- Watchdog timer
- 8-bit timer H1 (if f_{RL} is selected as the count clock)

In addition, the following operation modes can be selected by the option byte.

- Internal low-speed oscillator cannot be stopped
- Internal low-speed oscillator can be stopped by software

The internal low-speed oscillator automatically starts oscillation after a reset release, and the watchdog timer is driven (240 kHz (TYP.)) if the watchdog timer operation has been enabled by the option byte.

(1) Example of setting procedure when stopping the internal low-speed oscillation clock

<1> Setting LSRSTOP to 1 (RCM register)

When LSRSTOP is set to 1, the internal low-speed oscillation clock is stopped.

(2) Example of setting procedure when restarting oscillation of the internal low-speed oscillation clock

<1> Clearing LSRSTOP to 0 (RCM register)

When LSRSTOP is cleared to 0, the internal low-speed oscillation clock is restarted.

Caution If "Internal low-speed oscillator cannot be stopped" is selected by the option byte, oscillation of the internal low-speed oscillation clock cannot be controlled.

6.6.5 Clocks supplied to CPU and peripheral hardware

The following table shows the relation among the clocks supplied to the CPU and peripheral hardware, and setting of registers.

Table 6-4. Clocks Supplied to CPU and Peripheral Hardware, and Register Setting (78K0/KB2)

Supplied Clock		XSEL	MCM0	EXCLK
Clock Supplied to CPU	Clock Supplied to Peripheral Hardware			
Internal high-speed oscillation clock		0	×	×
Internal high-speed oscillation clock	X1 clock	1	0	0
	External main system clock	1	0	1
X1 clock		1	1	0
External main system clock		1	1	1

Remarks 1. The 78K0/KB2 is not provided with a subsystem clock.

2. XSEL: Bit 2 of the main clock mode register (MCM)
MCM0: Bit 0 of MCM
EXCLK: Bit 7 of the clock operation mode select register (OSCCTL)
×: don't care

Table 6-5. Clocks Supplied to CPU and Peripheral Hardware, and Register Setting (78K0/KC2, 78K0/KD2, 78K0/KE2, and 78K0/KF2)

Supplied Clock		XSEL	CSS	MCM0	EXCLK
Clock Supplied to CPU	Clock Supplied to Peripheral Hardware				
Internal high-speed oscillation clock		0	0	×	×
Internal high-speed oscillation clock	X1 clock	1	0	0	0
	External main system clock	1	0	0	1
X1 clock		1	0	1	0
External main system clock		1	0	1	1
Subsystem clock	Internal high-speed oscillation clock	0	1	×	×
	X1 clock	1	1	0	0
		1	1	1	0
	External main system clock	1	1	0	1
		1	1	1	1

Remark XSEL: Bit 2 of the main clock mode register (MCM)
CSS: Bit 4 of the processor clock control register (PCC)
MCM0: Bit 0 of MCM
EXCLK: Bit 7 of the clock operation mode select register (OSCCTL)
×: don't care

6.6.6 CPU clock status transition diagram

Figure 6-17 and 6-18 shows the CPU clock status transition diagram of this product.

Figure 6-17. CPU Clock Status Transition Diagram
(When 1.59 V POC Mode Is Set (Option Byte: POCMODE = 0), 78K0/KB2)

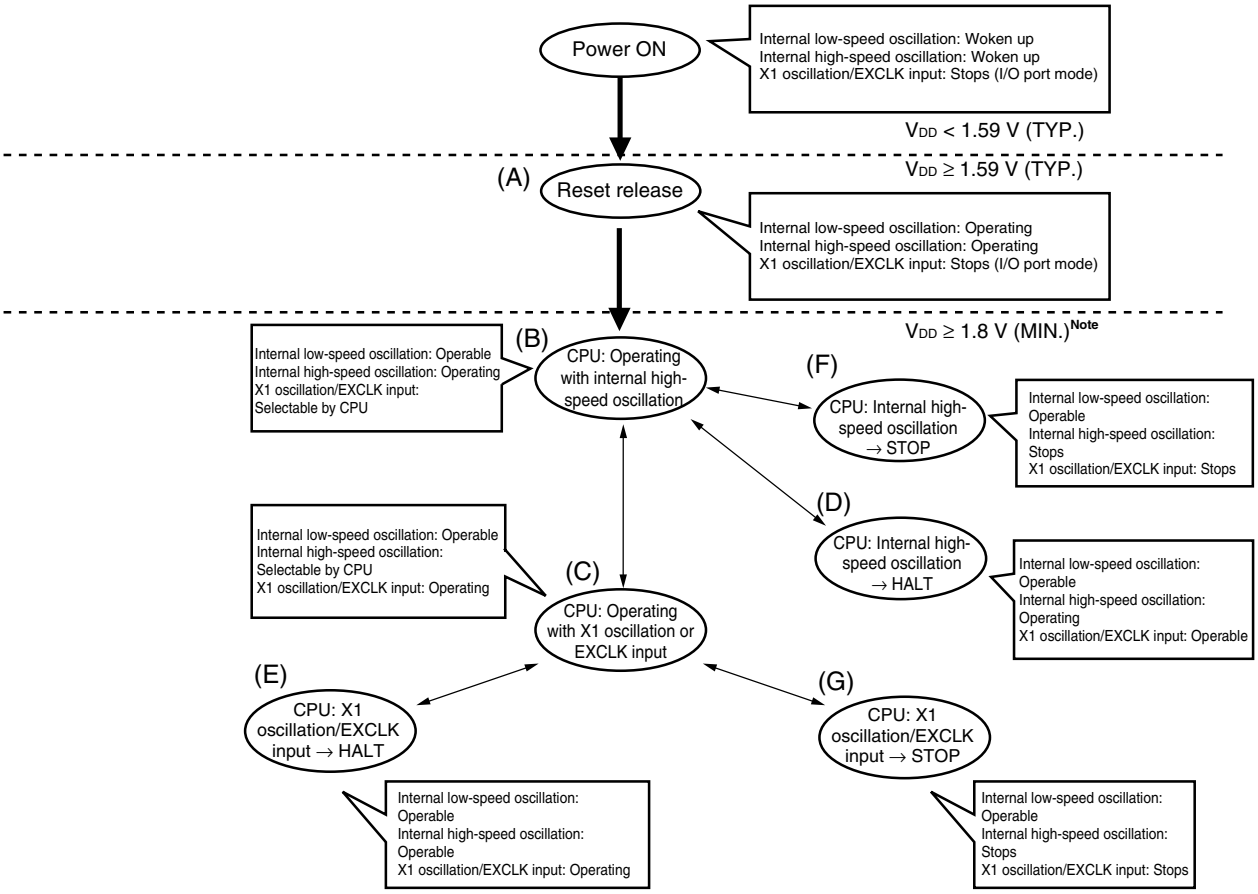

Note Standard and (A) grade products: 1.8 V,
(A2) grade products: 2.7 V

Remark In the 2.7 V/1.59 V POC mode (option byte: POCMODE = 1), the CPU clock status changes to (A) in the above figure when the supply voltage exceeds 2.7 V (TYP.), and to (B) after reset processing (11 to 45 μs).

Figure 6-18. CPU Clock Status Transition Diagram
(When 1.59 V POC Mode Is Set (Option Byte: POCMODE = 0),
78K0/KC2, 78K0/KD2, 78K0/KE2, and 78K0/KF2)

<R>

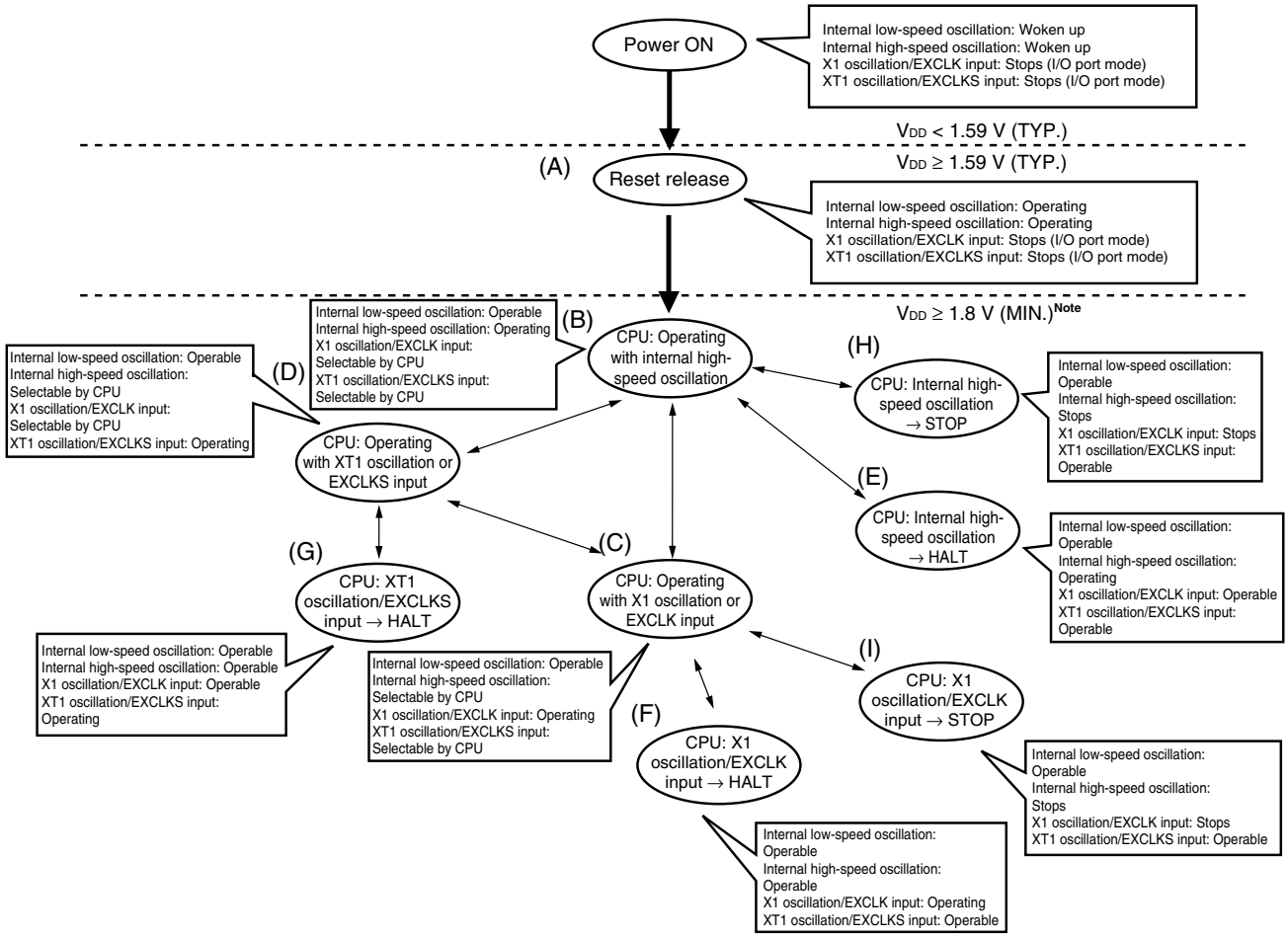

Note Standard and (A) grade products: 1.8 V,
(A2) grade products: 2.7 V

Remark In the 2.7 V/1.59 V POC mode (option byte: POCMODE = 1), the CPU clock status changes to (A) in the above figure when the supply voltage exceeds 2.7 V (TYP.), and to (B) after reset processing (11 to 45 μs).

Table 6-6 shows transition of the CPU clock and examples of setting the SFR registers.

Table 6-6. CPU Clock Transition and SFR Register Setting Examples (1/5)

(1) CPU operating with internal high-speed oscillation clock (B) after reset release (A)

Status Transition	SFR Register Setting
(A) → (B)	SFR registers do not have to be set (default status after reset release).

(2) CPU operating with high-speed system clock (C) after reset release (A)

(The CPU operates with the internal high-speed oscillation clock immediately after a reset release (B).)

(Setting sequence of SFR registers) →

Setting Flag of SFR Register / Status Transition	AMPH	EXCLK	OSCSEL	MSTOP	OSTC Register	XSEL	MCM0
(A) → (B) → (C) (X1 clock: 1 MHz ≤ f_{XH} ≤ 10 MHz)	0	0	1	0	Must be checked	1	1
(A) → (B) → (C) (external main clock: 1 MHz ≤ f_{XH} ≤ 10 MHz)	0	1	1	0	Must not be checked	1	1
(A) → (B) → (C) (X1 clock: 10 MHz < f_{XH} ≤ 20 MHz)	1	0	1	0	Must be checked	1	1
(A) → (B) → (C) (external main clock: 10 MHz < f_{XH} ≤ 20 MHz)	1	1	1	0	Must not be checked	1	1

Caution Set the X1 clock after the supply voltage has reached the operable voltage of the clock to be used (see CHAPTER 30 ELECTRICAL SPECIFICATIONS (STANDARD PRODUCTS) to CHAPTER 33 ELECTRICAL SPECIFICATIONS ((A2) GRADE PRODUCTS: T_A = –40 to +125°C)).

(3) CPU operating with subsystem clock (D) after reset release (A)[Note]

(The CPU operates with the internal high-speed oscillation clock immediately after a reset release (B).)

Note The 78K0/KB2 is not provided with a subsystem clock.

(Setting sequence of SFR registers) →

Setting Flag of SFR Register / Status Transition	XTSTART	EXCLKS	OSCSELS	Waiting for Oscillation Stabilization	CSS
(A) → (B) → (D) (XT1 clock)	0	0	1	Necessary	1
	1	×	×		
(A) → (B) → (D) (external subsystem clock)	0	1	1	Unnecessary	1

Remarks 1. (A) to (I) in Table 6-6 correspond to (A) to (I) in Figure 6-17 and 6-18.

2. EXCLK, OSCSEL, EXCLKS, OSCSELS, AMPH: Bits 7 to 4 and 0 of the clock operation mode select register (OSCCTL)
MSTOP: Bit 7 of the main OSC control register (MOC)
XSEL, MCM0: Bits 2 and 0 of the main clock mode register (MCM)
XTSTART, CSS: Bits 6 and 4 of the processor clock control register (PCC)
×: Don't care

Table 6-6. CPU Clock Transition and SFR Register Setting Examples (2/5)

(4) CPU clock changing from internal high-speed oscillation clock (B) to high-speed system clock (C)

(Setting sequence of SFR registers) →

Setting Flag of SFR Register / Status Transition	AMPH[Note]	EXCLK	OSCSEL	MSTOP	OSTC Register	XSEL[Note]	MCM0
(B) → (C) (X1 clock: 1 MHz ≤ f_{XH} ≤ 10 MHz)	0	0	1	0	Must be checked	1	1
(B) → (C) (external main clock: 1 MHz ≤ f_{XH} ≤ 10 MHz)	0	1	1	0	Must not be checked	1	1
(B) → (C) (X1 clock: 10 MHz < f_{XH} ≤ 20 MHz)	1	0	1	0	Must be checked	1	1
(B) → (C) (external main clock: 10 MHz < f_{XH} ≤ 20 MHz)	1	1	1	0	Must not be checked	1	1

Unnecessary if these registers are already set

Unnecessary if the CPU is operating with the high-speed system clock

Note The value of this flag can be changed only once after a reset release. This setting is not necessary if it has already been set.

Caution Set the X1 clock after the supply voltage has reached the operable voltage of the clock to be used (see CHAPTER 30 ELECTRICAL SPECIFICATIONS (STANDARD PRODUCTS) to CHAPTER 33 ELECTRICAL SPECIFICATIONS ((A2) GRADE PRODUCTS: T_A = –40 to +125°C)).

(5) CPU clock changing from internal high-speed oscillation clock (B) to subsystem clock (D)[Note]

Note The 78K0/KB2 is not provided with a subsystem clock.

(Setting sequence of SFR registers) →

Setting Flag of SFR Register / Status Transition	XTSTART	EXCLKS	OSCSELS	Waiting for Oscillation Stabilization	CSS
(B) → (D) (XT1 clock)	0	0	1	Necessary	1
	1	×	×		
(B) → (D) (external subsystem clock)	0	1	1	Unnecessary	1

Unnecessary if the CPU is operating with the subsystem clock

Remarks 1. (A) to (I) in Table 6-6 correspond to (A) to (I) in Figure 6-17 and 6-18.

2. EXCLK, OSCSEL, EXCLKS, OSCSELS, AMPH: Bits 7 to 4 and 0 of the clock operation mode select register (OSCCTL)
MSTOP: Bit 7 of the main OSC control register (MOC)
XSEL, MCM0: Bits 2 and 0 of the main clock mode register (MCM)
XTSTART, CSS: Bits 6 and 4 of the processor clock control register (PCC)
×: Don't care

Table 6-6. CPU Clock Transition and SFR Register Setting Examples (3/5)

(6) CPU clock changing from high-speed system clock (C) to internal high-speed oscillation clock (B)

(Setting sequence of SFR registers) →

Setting Flag of SFR Register / Status Transition	RSTOP	RSTS	MCM0
(C) → (B)	0	Confirm this flag is 1.	0

Unnecessary if the CPU is operating with the internal high-speed oscillation clock

(7) CPU clock changing from high-speed system clock (C) to subsystem clock (D)[Note]

Note The 78K0/KB2 is not provided with a subsystem clock.

(Setting sequence of SFR registers) →

Setting Flag of SFR Register / Status Transition	XTSTART	EXCLKS	OSCSELS	Waiting for Oscillation Stabilization	CSS
(C) → (D) (XT1 clock)	0	0	1	Necessary	1
	1	×	×		
(C) → (D) (external subsystem clock)	0	1	1	Unnecessary	1

Unnecessary if the CPU is operating with the subsystem clock

(8) CPU clock changing from subsystem clock (D) to internal high-speed oscillation clock (B)

Note The 78K0/KB2 is not provided with a subsystem clock.

(Setting sequence of SFR registers) →

Setting Flag of SFR Register / Status Transition	RSTOP	RSTS	MCM0	CSS
(D) → (B)	0	Confirm this flag is 1.	0	0

Unnecessary if the CPU is operating with the internal high-speed oscillation clock

↑ Unnecessary if XSEL is 0

Remarks 1. (A) to (I) in Table 6-6 correspond to (A) to (I) in Figure 6-17 and 6-18.

2. MCM0: Bit 0 of the main clock mode register (MCM)
EXCLKS, OSCSELS: Bits 5 and 4 of the clock operation mode select register (OSCCTL)
RSTS, RSTOP: Bits 7 and 0 of the internal oscillation mode register (RCM)
XTSTART, CSS: Bits 6 and 4 of the processor clock control register (PCC)
×: Don't care

Table 6-6. CPU Clock Transition and SFR Register Setting Examples (4/5)

(9) CPU clock changing from subsystem clock (D) to high-speed system clock (C)[Note]

Note The 78K0/KB2 is not provided with a subsystem clock.

(Setting sequence of SFR registers) →

Setting Flag of SFR Register / Status Transition	AMPH[Note]	EXCLK	OSCSEL	MSTOP	OSTC Register	XSEL[Note]	MCM0	CSS
(D) → (C) (X1 clock: 1 MHz ≤ f_{XH} ≤ 10 MHz)	0	0	1	0	Must be checked	1	1	0
(D) → (C) (external main clock: 1 MHz ≤ f_{XH} ≤ 10 MHz	0	1	1	0	Must not be checked	1	1	0
(D) → (C) (X1 clock: 10 MHz < f_{XH} ≤ 20 MHz)	1	0	1	0	Must be checked	1	1	0
(D) → (C) (external main clock: 10 MHz < f_{XH} ≤ 20 MHz)	1	1	1	0	Must not be checked	1	1	0

Unnecessary if these registers are already set

Unnecessary if the CPU is operating with the high-speed system clock

Unnecessary if this register is already set

Note The value of this flag can be changed only once after a reset release. This setting is not necessary if it has already been set.

Caution Set the X1 clock after the supply voltage has reached the operable voltage of the clock to be used (see CHAPTER 30 ELECTRICAL SPECIFICATIONS (STANDARD PRODUCTS) to CHAPTER 33 ELECTRICAL SPECIFICATIONS ((A2) GRADE PRODUCTS: T_A = –40 to +125°C)).

(10) • HALT mode (E) set while CPU is operating with internal high-speed oscillation clock (B)
• HALT mode (F) set while CPU is operating with high-speed system clock (C)
• HALT mode (G) set while CPU is operating with subsystem clock (D)[Note]

Status Transition	Setting
(B) → (E) (C) → (F) (D) → (G)[Note]	Executing HALT instruction

Note The 78K0/KB2 is not provided with a subsystem clock.

Remarks 1. (A) to (I) in Table 6-6 correspond to (A) to (I) in Figure 6-17 and 6-18.

2. EXCLK, OSCSEL, AMPH: Bits 7, 6, and 0 of the clock operation mode select register (OSCCTL)
MSTOP: Bit 7 of the main OSC control register (MOC)
XSEL, MCM0: Bits 2 and 0 of the main clock mode register (MCM)
CSS: Bit 4 of the processor clock control register (PCC)

Table 6-6. CPU Clock Transition and SFR Register Setting Examples (5/5)

(11) • STOP mode (H) set while CPU is operating with internal high-speed oscillation clock (B)
• STOP mode (I) set while CPU is operating with high-speed system clock (C)

(Setting sequence) ——————————————————————————→

Status Transition	Setting	
(B) → (H) (C) → (I)	Stopping peripheral functions that cannot operate in STOP mode	Executing STOP instruction

Remarks 1. (A) to (I) in Table 6-6 correspond to (A) to (I) in Figure 6-17 and 6-18.

2. EXCLK, OSCSEL, AMPH: Bits 7, 6 and 0 of the clock operation mode select register (OSCCTL)
MSTOP: Bit 7 of the main OSC control register (MOC)
XSEL, MCM0: Bits 2 and 0 of the main clock mode register (MCM)
CSS: Bit 4 of the processor clock control register (PCC)

6.6.7 Condition before changing CPU clock and processing after changing CPU clock

Condition before changing the CPU clock and processing after changing the CPU clock are shown below.

Table 6-7. Changing CPU Clock

	CPU Clock		Condition Before Change	Processing After Change
	Before Change	After Change		
KB2, KC2, KD2, KE2, KF2	Internal high-speed oscillation clock	X1 clock	Stabilization of X1 oscillation • MSTOP = 0, OSCSEL = 1, EXCLK = 0 • After elapse of oscillation stabilization time	• Internal high-speed oscillator can be stopped (RSTOP = 1). • Clock supply to CPU is stopped for 4.06 to 16.12 μs after AMPH has been set to 1.
		External main system clock	Enabling input of external clock from EXCLK pin • MSTOP = 0, OSCSEL = 1, EXCLK = 1	• Internal high-speed oscillator can be stopped (RSTOP = 1). • Clock supply to CPU is stopped for the duration of 160 external clocks from the EXCLK pin after AMPH has been set to 1.
	X1 clock	Internal high-speed oscillation clock	Oscillation of internal high-speed oscillator • RSTOP = 0	X1 oscillation can be stopped (MSTOP = 1).
	External main system clock			External main system clock input can be disabled (MSTOP = 1).
KC2, KD2, KE2, KF2 (other than KB2)	Internal high-speed oscillation clock	XT1 clock	Stabilization of XT1 oscillation • XTSTART = 0, EXCLKS = 0, OSCSELS = 1, or XTSTART = 1 • After elapse of oscillation stabilization time	Operating current can be reduced by stopping internal high-speed oscillator (RSTOP = 1).
	X1 clock			X1 oscillation can be stopped (MSTOP = 1).
	External main system clock			External main system clock input can be disabled (MSTOP = 1).
	Internal high-speed oscillation clock	External subsystem clock	Enabling input of external clock from EXCLKS pin • XTSTART = 0, EXCLKS = 1, OSCSELS = 1	Operating current can be reduced by stopping internal high-speed oscillator (RSTOP = 1).
	X1 clock			X1 oscillation can be stopped (MSTOP = 1).
	External main system clock			External main system clock input can be disabled (MSTOP = 1).
	XT1 clock, external subsystem clock	Internal high-speed oscillation clock	Oscillation of internal high-speed oscillator and selection of internal high-speed oscillation clock as main system clock • RSTOP = 0, MCS = 0	XT1 oscillation can be stopped or external subsystem clock input can be disabled (OSCSELS = 0).
		X1 clock	Stabilization of X1 oscillation and selection of high-speed system clock as main system clock • MSTOP = 0, OSCSEL = 1, EXCLK = 0 • After elapse of oscillation stabilization time • MCS = 1	• XT1 oscillation can be stopped or external subsystem clock input can be disabled (OSCSELS = 0). • Clock supply to CPU is stopped for 4.06 to 16.12 μs after AMPH has been set to 1.
		External main system clock	Enabling input of external clock from EXCLK pin and selection of high-speed system clock as main system clock • MSTOP = 0, OSCSEL = 1, EXCLK = 1 • MCS = 1	• XT1 oscillation can be stopped or external subsystem clock input can be disabled (OSCSELS = 0). • Clock supply to CPU is stopped for the duration of 160 external clocks from the EXCLK pin after AMPH has been set to 1.

Remark The 78K0/KB2 is not provided with a subsystem clock.

6.6.8 Time required for switchover of CPU clock and main system clock

By setting bits 0 to 2 (PCC0 to PCC2) and bit 4 (CSS) of the processor clock control register (PCC), the CPU clock can be switched (between the main system clock and the subsystem clock) and the division ratio of the main system clock can be changed.

The actual switchover operation is not performed immediately after rewriting to PCC; operation continues on the pre-switchover clock for several clocks (see **Table 6-8** and **6-9**).

Whether the CPU is operating on the main system clock or the subsystem clock[Note] can be ascertained using bit 5 (CLS) of the PCC register.

Note The 78K0/KB2 is not provided with a subsystem clock.

Table 6-8. Time Required for Switchover of CPU Clock and Main System Clock Cycle Division Factor (78K0/KB2)

Set Value Before Switchover			Set Value After Switchover														
PCC2	PCC1	PCC0	PCC2	PCC1	PCC0	PCC2	PCC1	PCC0	PCC2	PCC1	PCC0	PCC2	PCC1	PCC0	PCC2	PCC1	PCC0
			0	0	0	0	0	1	0	1	0	0	1	1	1	0	0
0	0	0				16 clocks			16 clocks			16 clocks			16 clocks		
0	0	1	8 clocks						8 clocks			8 clocks			8 clocks		
0	1	0	4 clocks			4 clocks						4 clocks			4 clocks		
0	1	1	2 clocks			2 clocks			2 clocks						2 clocks		
1	0	0	1 clock			1 clock			1 clock			1 clock					

Remark The number of clocks listed in Table 6-8 is the number of CPU clocks before switchover.

Table 6-9. Time Required for Switchover of CPU Clock and Main System Clock Cycle Division Factor (78K0/KC2, 78K0/KD2, 78K0/KE2, and 78K0/KF2)

Set Value Before Switchover				Set Value After Switchover																							
CSS	PCC2	PCC1	PCC0	CSS	PCC2	PCC1	PCC0	CSS	PCC2	PCC1	PCC0	CSS	PCC2	PCC1	PCC0	CSS	PCC2	PCC1	PCC0	CSS	PCC2	PCC1	PCC0	CSS	PCC2	PCC1	PCC0
				0	0	0	0	0	0	0	1	0	0	1	0	0	0	1	1	0	1	0	0	1	×	×	×
0	0	0	0					16 clocks				16 clocks				16 clocks				16 clocks				$2f_{XP}/f_{SUB}$ clocks			
	0	0	1	8 clocks								8 clocks				8 clocks				8 clocks				f_{XP}/f_{SUB} clocks			
	0	1	0	4 clocks				4 clocks								4 clocks				4 clocks				$f_{XP}/2f_{SUB}$ clocks			
	0	1	1	2 clocks				2 clocks				2 clocks								2 clocks				$f_{XP}/4f_{SUB}$ clocks			
	1	0	0	1 clock				1 clock				1 clock				1 clock								$f_{XP}/8f_{SUB}$ clocks			
1	×	×	×	2 clocks				2 clocks				2 clocks				2 clocks				2 clocks							

Caution Selection of the main system clock cycle division factor (PCC0 to PCC2) and switchover from the main system clock to the subsystem clock (changing CSS from 0 to 1) should not be set simultaneously.

Simultaneous setting is possible, however, for selection of the main system clock cycle division factor (PCC0 to PCC2) and switchover from the subsystem clock to the main system clock (changing CSS from 1 to 0).

Remark 1. The number of clocks listed in Table 6-9 is the number of CPU clocks before switchover.

Remark 2. When switching the CPU clock from the main system clock to the subsystem clock, calculate the number of clocks by rounding up to the next clock and discarding the decimal portion, as shown below.

Example When switching CPU clock from $f_{XP}/2$ to $f_{SUB}/2$ (@ oscillation with f_{XP} = 10 MHz, f_{SUB} = 32.768 kHz)

f_{XP}/f_{SUB} = 10000/32.768 ≅ 305.1 → 306 clocks

By setting bit 0 (MCM0) of the main clock mode register (MCM), the main system clock can be switched (between the internal high-speed oscillation clock and the high-speed system clock).

The actual switchover operation is not performed immediately after rewriting to MCM0; operation continues on the pre-switchover clock for several clocks (see **Table 6-10**).

Whether the CPU is operating on the internal high-speed oscillation clock or the high-speed system clock can be ascertained using bit 1 (MCS) of MCM.

Table 6-10. Maximum Time Required for Main System Clock Switchover

Set Value Before Switchover	Set Value After Switchover	
MCM0	MCM0	
	0	1
0		1 + $2f_{RH}/f_{XH}$ clock
1	1 + $2f_{XH}/f_{RH}$ clock	

Cautions 1. When switching the internal high-speed oscillation clock to the high-speed system clock, bit 2 (XSEL) of MCM must be set to 1 in advance. The value of XSEL can be changed only once after a reset release.

2. Do not rewrite MCM0 when the CPU clock operates with the subsystem clock.

Remarks 1. The number of clocks listed in Table 6-10 is the number of main system clocks before switchover.

2. Calculate the number of clocks in Table 6-10 by removing the decimal portion.

Example When switching the main system clock from the internal high-speed oscillation clock to the high-speed system clock (@ oscillation with f_{RH} = 8 MHz, f_{XH} = 10 MHz)

1 + $2f_{RH}/f_{XH}$ = 1 + 2 × 8/10 = 1 + 2 × 0.8 = 1 + 1.6 = 2.6 → 2 clocks

6.6.9 Conditions before clock oscillation is stopped

The following lists the register flag settings for stopping the clock oscillation (disabling external clock input) and conditions before the clock oscillation is stopped.

Table 6-11. Conditions Before the Clock Oscillation Is Stopped and Flag Settings (78K0/KB2)

Clock[Note]	Conditions Before Clock Oscillation Is Stopped (External Clock Input Disabled)	Flag Settings of SFR Register
Internal high-speed oscillation clock	MCS = 1 (The CPU is operating on the high-speed system clock)	RSTOP = 1
X1 clock	MCS = 0 (The CPU is operating on the internal high-speed oscillation clock)	MSTOP = 1
External main system clock		

Note The 78K0/KB2 is not provided with a subsystem clock.

Table 6-12. Conditions Before the Clock Oscillation Is Stopped and Flag Settings (78K0/KC2, 78K0/KD2, 78K0/KE2, and 78K0/KF2)

Clock	Conditions Before Clock Oscillation Is Stopped (External Clock Input Disabled)	Flag Settings of SFR Register
Internal high-speed oscillation clock	MCS = 1 or CLS = 1 (The CPU is operating on a clock other than the internal high-speed oscillation clock)	RSTOP = 1
X1 clock	MCS = 0 or CLS = 1 (The CPU is operating on a clock other than the high-speed system clock)	MSTOP = 1
External main system clock		
XT1 clock	CLS = 0 (The CPU is operating on a clock other than the subsystem clock)	OSCSELS = 0
External subsystem clock		

6.6.10 Peripheral hardware and source clocks

The following lists peripheral hardware and source clocks incorporated in the 78K0/Kx2 microcontrollers.

Remark The peripheral hardware depends on the product. See **1.7 Block Diagram** and **1.8 Outline of Functions**.

Table 6-13. Peripheral Hardware and Source Clocks

Peripheral Hardware \ Source Clock		Peripheral Hardware Clock (f_{PRS})	Subsystem Clock (f_{SUB})[Note 1]	Internal Low-Speed Oscillation Clock (f_{RL})	TM50 Output	External Clock from Peripheral Hardware Pins
16-bit timer/ event counter	00	Y	N	N	N	Y (TI000 pin)[Note 2]
	01	Y	N	N	N	Y (TI001 pin)[Note 2]
8-bit timer/ event counter	50	Y	N	N	N	Y (TI50 pin)[Note 2]
	51	Y	N	N	N	Y (TI51 pin)[Note 2]
8-Bit timer	H0	Y	N	N	Y	N
	H1	Y	N	Y	N	N
Watch timer		Y	Y	N	N	N
Watchdog timer		N	N	Y	N	N
Buzzer output		Y	N	N	N	N
Clock output		Y	Y	N	N	N
A/D converter		Y	N	N	N	N
Serial interface	UART0	Y	N	N	Y	N
	UART6	Y	N	N	Y	N
	CSI10	Y	N	N	N	Y ($\overline{SCK10}$ pin)[Note 2]
	CSI11	Y	N	N	N	Y ($\overline{SCK11}$ pin)[Note 2]
	CSIA0	Y	N	N	N	Y ($\overline{SCKA0}$ pin)[Note 2]
	IIC0	Y	N	N	N	Y (EXSCL0, SCL0 pin)[Note 2]

Notes 1. The 78K0/KB2 is not provided with a subsystem clock.

2. Do not start the peripheral hardware operation with the external clock from peripheral hardware pins when the internal high-speed oscillation clock and high-speed system clock are stopped while the CPU operates with the subsystem clock, or when in the STOP mode.

Remark Y: Can be selected, N: Cannot be selected

CHAPTER 7 16-BIT TIMER/EVENT COUNTERS 00 AND 01

	78K0/KB2	78K0/KC2	78K0/KD2	78K0/KE2		78K0/KF2
				Products whose flash memory is less than 32 KB	Products whose flash memory is at least 48 KB	
16-bit timer/event counters 00	√					
16-bit timer/event counters 00	–				√	

Remark √: Mounted, –: Not mounted

7.1 Functions of 16-Bit Timer/Event Counters 00 and 01

16-bit timer/event counters 00 and 01 have the following functions.

(1) Interval timer

16-bit timer/event counters 00 and 01 generate an interrupt request at the preset time interval.

(2) Square-wave output

16-bit timer/event counters 00 and 01 can output a square wave with any selected frequency.

(3) External event counter

16-bit timer/event counters 00 and 01 can measure the number of pulses of an externally input signal.

(4) One-shot pulse output

16-bit timer event counters 00 and 01 can output a one-shot pulse whose output pulse width can be set freely.

(5) PPG output

16-bit timer/event counters 00 and 01 can output a rectangular wave whose frequency and output pulse width can be set freely.

(6) Pulse width measurement

16-bit timer/event counters 00 and 01 can measure the pulse width of an externally input signal.

7.2 Configuration of 16-Bit Timer/Event Counters 00 and 01

16-bit timer/event counters 00 and 01 include the following hardware.

Table 7-1. Configuration of 16-Bit Timer/Event Counters 00 and 01

Item	Configuration
Time/counter	16-bit timer counter 0n (TM0n)
Register	16-bit timer capture/compare registers 00n, 01n (CR00n, CR01n)
Timer input	TI00n, TI01n pins
Timer output	TO0n pin, output controller
Control registers	16-bit timer mode control register 0n (TMC0n) 16-bit timer capture/compare control register 0n (CRC0n) 16-bit timer output control register 0n (TOC0n) Prescaler mode register 0n (PRM0n) Port mode register 0 (PM0) Port register 0 (P0)

Remark n = 0: 78K0/KE2 products whose flash memory is less than 32 KB, and 78K0/KB2, 78K0/KC2, 78K0/KD2 products

n = 0, 1: 78K0/KE2 products whose flash memory is at least 48 KB, and 78K0/KF2 products

Figures 7-1 and 7-2 show the block diagrams.

Figure 7-1. Block Diagram of 16-Bit Timer/Event Counter 00

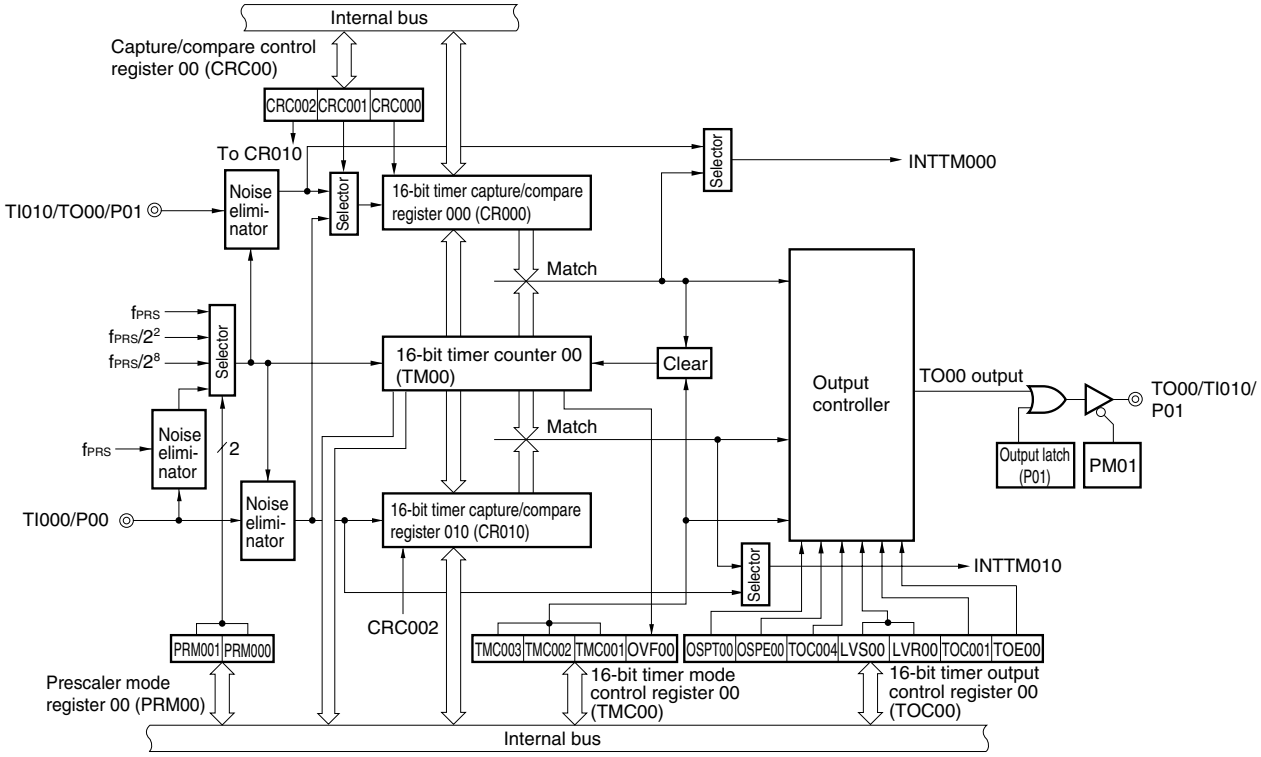

(Cautions 1 to 3 are listed on the next page.)

Figure 7-2. Block Diagram of 16-Bit Timer/Event Counter 01

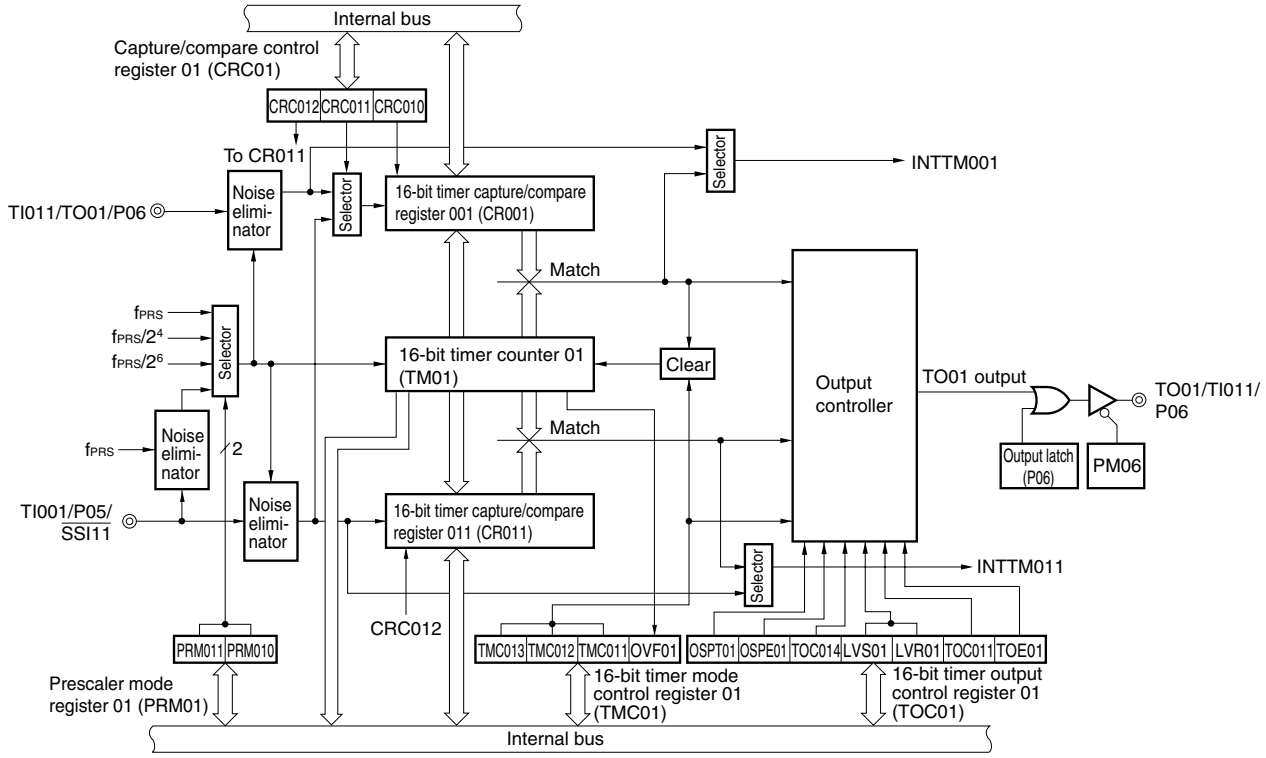

Cautions 1. The valid edge of TI010 and timer output (TO00) cannot be used for the P01 pin at the same time, and the valid edge of TI011 and timer output (TO01) cannot be used for the P06 pin at the same time. Select either of the functions.

2. If clearing of bits 3 and 2 (TMC0n3 and TMC0n2) of 16-bit timer mode control register 0n (TMC0n) to 00 and input of the capture trigger conflict, then the captured data is undefined.

3. To change the mode from the capture mode to the comparison mode, first clear the TMC0n3 and TMC0n2 bits to 00, and then change the setting.

A value that has been once captured remains stored in CR00n unless the device is reset. If the mode has been changed to the comparison mode, be sure to set a comparison value.

(1) 16-bit timer counter 0n (TM0n)

TM0n is a 16-bit read-only register that counts count pulses.

The counter is incremented in synchronization with the rising edge of the count clock.

Remark n = 0: 78K0/KE2 products whose flash memory is less than 32 KB, and 78K0/KB2, 78K0/KC2, 78K0/KD2 products

n = 0, 1: 78K0/KE2 products whose flash memory is at least 48 KB, and 78K0/KF2 products

Figure 7-3. Format of 16-Bit Timer Counter 0n (TM0n)

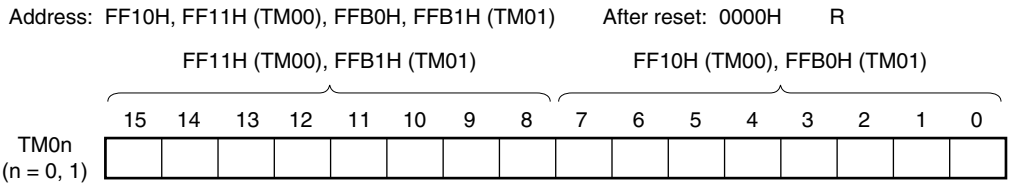

The count value of TM0n can be read by reading TM0n when the value of bits 3 and 2 (TMC0n3 and TMC0n2) of 16-bit timer mode control register 0n (TMC0n) is other than 00. The value of TM0n is 0000H if it is read when TMC0n3 and TMC0n2 = 00.

The count value is reset to 0000H in the following cases.

- At reset signal generation
- If TMC0n3 and TMC0n2 are cleared to 00
- If the valid edge of the TI00n pin is input in the mode in which the clear & start occurs when inputting the valid edge to the TI00n pin
- If TM0n and CR00n match in the mode in which the clear & start occurs when TM0n and CR00n match
- OSPT0n is set to 1 in one-shot pulse output mode or the valid edge is input to the TI00n pin

Caution Even if TM0n is read, the value is not captured by CR01n.

(2) 16-bit timer capture/compare register 00n (CR00n), 16-bit timer capture/compare register 01n (CR01n)

CR00n and CR01n are 16-bit registers that are used with a capture function or comparison function selected by using CRC0n.

Change the value of CR00n while the timer is stopped (TMC0n3 and TMC0n2 = 00).

The value of CR01n can be changed during operation if the value has been set in a specific way. For details, see **7.5.1 Rewriting CR01n during TM0n operation**.

These registers can be read or written in 16-bit units.

Reset signal generation clears these registers to 0000H.

Remark n = 0: 78K0/KE2 products whose flash memory is less than 32 KB, and 78K0/KB2, 78K0/KC2, 78K0/KD2 products

n = 0, 1: 78K0/KE2 products whose flash memory is at least 48 KB, and 78K0/KF2 products

Figure 7-4. Format of 16-Bit Timer Capture/Compare Register 00n (CR00n)

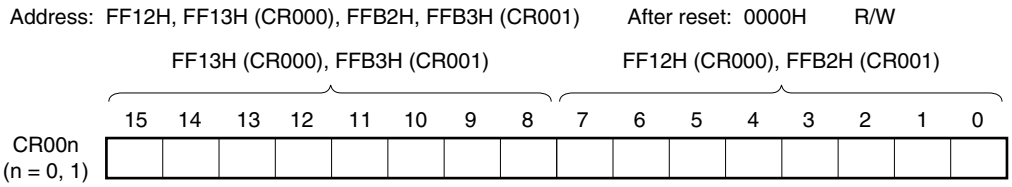

(i) When CR00n is used as a compare register

The value set in CR00n is constantly compared with the TM0n count value, and an interrupt request signal (INTTM00n) is generated if they match. The value is held until CR00n is rewritten.

Caution CR00n does not perform the capture operation when it is set in the comparison mode, even if a capture trigger is input to it.

(ii) When CR00n is used as a capture register

The count value of TM0n is captured to CR00n when a capture trigger is input.

As the capture trigger, an edge of a phase reverse to that of the TI00n pin or the valid edge of the TI01n pin can be selected by using CRC0n or PRM0n.

Figure 7-5. Format of 16-Bit Timer Capture/Compare Register 01n (CR01n)

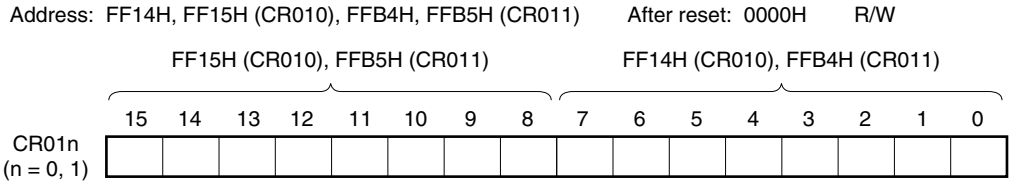

(i) When CR01n is used as a compare register

The value set in CR01n is constantly compared with the TM0n count value, and an interrupt request signal (INTTM01n) is generated if they match.

Caution CR01n does not perform the capture operation when it is set in the comparison mode, even if a capture trigger is input to it.

(ii) When CR01n is used as a capture register

The count value of TM0n is captured to CR01n when a capture trigger is input.

It is possible to select the valid edge of the TI00n pin as the capture trigger. The TI00n pin valid edge is set by PRM0n.

Remark n = 0: 78K0/KE2 products whose flash memory is less than 32 KB, and 78K0/KB2, 78K0/KC2, 78K0/KD2 products

n = 0, 1: 78K0/KE2 products whose flash memory is at least 48 KB, and 78K0/KF2 products

(iii) Setting range when CR00n or CR01n is used as a compare register

When CR00n or CR01n is used as a compare register, set it as shown below.

Operation	CR00n Register Setting Range	CR01n Register Setting Range
Operation as interval timer	0000H < N ≤ FFFFH	0000H[Note] ≤ M ≤ FFFFH Normally, this setting is not used. Mask the match interrupt signal (INTTM01n).
Operation as square-wave output		
Operation as external event counter		
Operation in the clear & start mode entered by TI00n pin valid edge input	0000H[Note] ≤ N ≤ FFFFH	0000H[Note] ≤ M ≤ FFFFH
Operation as free-running timer		
Operation as PPG output	M < N ≤ FFFFH	0000H[Note] ≤ M < N
Operation as one-shot pulse output	0000H[Note] ≤ N ≤ FFFFH (N ≠ M)	0000H[Note] ≤ M ≤ FFFFH (M ≠ N)

Note When 0000H is set, a match interrupt immediately after the timer operation does not occur and timer output is not changed, and the first match timing is as follows. A match interrupt occurs at the timing when the timer counter (TM0n register) is changed from 0000H to 0001H.

- When the timer counter is cleared due to overflow
- When the timer counter is cleared due to TI00n pin valid edge (when clear & start mode is entered by TI00n pin valid edge input)
- When the timer counter is cleared due to compare match (when clear & start mode is entered by match between TM0n and CR00n (CR00n = other than 0000H, CR01n = 0000H))

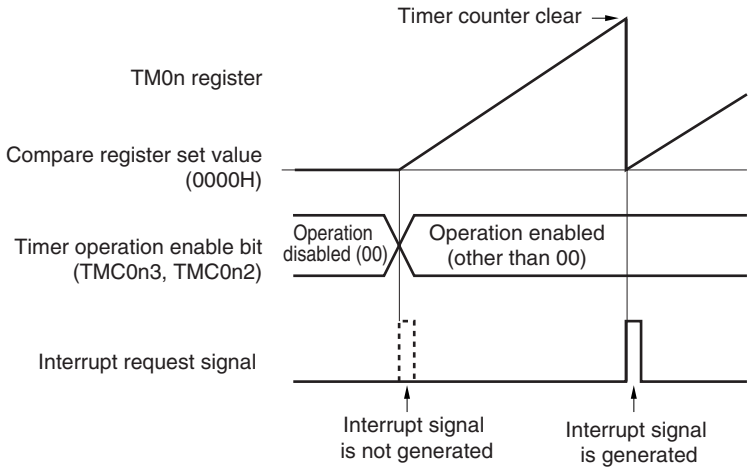

Remarks 1. N: CR00n register set value, M: CR01n register set value

2. For details of TMC0n3 and TMC0n2, see **7.3 (1) 16-bit timer mode control register 0n (TMC0n)**.

3. n = 0: 78K0/KE2 products whose flash memory is less than 32 KB, and 78K0/KB2, 78K0/KC2, 78K0/KD2 products

n = 0, 1: 78K0/KE2 products whose flash memory is at least 48 KB, and 78K0/KF2 products

Table 7-2. Capture Operation of CR00n and CR01n

External Input Signal / Capture Operation	TI00n Pin Input		TI01n Pin Input	
Capture operation of CR00n	CRC0n1 = 1 TI00n pin input (reverse phase)	Set values of ES0n1 and ES0n0 Position of edge to be captured	CRC0n1 bit = 0 TI01n pin input	Set values of ES1n1 and ES1n0 Position of edge to be captured
		01: Rising		01: Rising
		00: Falling		00: Falling
		11: Both edges (cannot be captured)		11: Both edges
	Interrupt signal	INTTM00n signal is not generated even if value is captured.	Interrupt signal	INTTM00n signal is generated each time value is captured.
Capture operation of CR01n	TI00n pin input[Note]	Set values of ES0n1 and ES0n0 Position of edge to be captured		
		01: Rising		
		00: Falling		
		11: Both edges		
	Interrupt signal	INTTM01n signal is generated each time value is captured.		

Note The capture operation of CR01n is not affected by the setting of the CRC0n1 bit.

Caution To capture the count value of the TM0n register to the CR00n register by using the phase reverse to that input to the TI00n pin, the interrupt request signal (INTTM00n) is not generated after the value has been captured. If the valid edge is detected on the TI01n pin during this operation, the capture operation is not performed but the INTTM00n signal is generated as an external interrupt signal. To not use the external interrupt, mask the INTTM00n signal.

Remarks 1. CRC0n1: See **7.3 (2) Capture/compare control register 0n (CRC0n)**.
ES1n1, ES1n0, ES0n1, ES0n0: See **7.3 (4) Prescaler mode register 0n (PRM0n)**.

2. n = 0: 78K0/KE2 products whose flash memory is less than 32 KB, and 78K0/KB2, 78K0/KC2, 78K0/KD2 products
n = 0, 1: 78K0/KE2 products whose flash memory is at least 48 KB, and 78K0/KF2 products

7.3 Registers Controlling 16-Bit Timer/Event Counters 00 and 01

Registers used to control 16-bit timer/event counters 00 and 01 are shown below.

- 16-bit timer mode control register 0n (TMC0n)
- Capture/compare control register 0n (CRC0n)
- 16-bit timer output control register 0n (TOC0n)
- Prescaler mode register 0n (PRM0n)
- Port mode register 0 (PM0)
- Port register 0 (P0)

(1) 16-bit timer mode control register 0n (TMC0n)

TMC0n is an 8-bit register that sets the 16-bit timer/event counter 0n operation mode, TM0n clear mode, and output timing, and detects an overflow.

Rewriting TMC0n is prohibited during operation (when TMC0n3 and TMC0n2 = other than 00). However, it can be changed when TMC0n3 and TMC0n2 are cleared to 00 (stopping operation) and when OVF0n is cleared to 0.

TMC0n can be set by a 1-bit or 8-bit memory manipulation instruction.

Reset signal generation clears TMC0n to 00H.

Caution 16-bit timer/event counter 0n starts operation at the moment TMC0n2 and TMC0n3 are set to values other than 00 (operation stop mode), respectively. Set TMC0n2 and TMC0n3 to 00 to stop the operation.

Remark n = 0: 78K0/KE2 products whose flash memory is less than 32 KB, and 78K0/KB2, 78K0/KC2, 78K0/KD2 products

n = 0, 1: 78K0/KE2 products whose flash memory is at least 48 KB, and 78K0/KF2 products

Figure 7-6. Format of 16-Bit Timer Mode Control Register 00 (TMC00)

Address: FFBAH After reset: 00H R/W

Symbol	7	6	5	4	3	2	1	<0>
TMC00	0	0	0	0	TMC003	TMC002	TMC001	OVF00

TMC003	TMC002	Operation enable of 16-bit timer/event counter 00
0	0	Disables 16-bit timer/event counter 00 operation. Stops supplying operating clock. Clears 16-bit timer counter 00 (TM00).
0	1	Free-running timer mode
1	0	Clear & start mode entered by TI000 pin valid edge input[Note]
1	1	Clear & start mode entered upon a match between TM00 and CR000

TMC001	Condition to reverse timer output (TO00)
0	• Match between TM00 and CR000 or match between TM00 and CR010
1	• Match between TM00 and CR000 or match between TM00 and CR010 • Trigger input of TI000 pin valid edge

OVF00	TM00 overflow flag
Clear (0)	Clears OVF00 to 0 or TMC003 and TMC002 = 00
Set (1)	Overflow occurs.
OVF00 is set to 1 when the value of TM00 changes from FFFFH to 0000H in all the operation modes (free-running timer mode, clear & start mode entered by TI000 pin valid edge input, and clear & start mode entered upon a match between TM00 and CR000). It can also be set to 1 by writing 1 to OVF00.	

Note The TI000 pin valid edge is set by bits 5 and 4 (ES001, ES000) of prescaler mode register 00 (PRM00).

Figure 7-7. Format of 16-Bit Timer Mode Control Register 01 (TMC01)

Address: FFB6H After reset: 00H R/W

Symbol	7	6	5	4	3	2	1	<0>
TMC01	0	0	0	0	TMC013	TMC012	TMC011	OVF01

TMC013	TMC012	Operation enable of 16-bit timer/event counter 01
0	0	Disables 16-bit timer/event counter 01 operation. Stops supplying operating clock. Clears 16-bit timer counter 01 (TM01).
0	1	Free-running timer mode
1	0	Clear & start mode entered by TI001 pin valid edge input[Note]
1	1	Clear & start mode entered upon a match between TM01 and CR001

TMC011	Condition to reverse timer output (TO01)
0	• Match between TM01 and CR001 or match between TM01 and CR011
1	• Match between TM01 and CR001 or match between TM01 and CR011 • Trigger input of TI001 pin valid edge

OVF01	TM01 overflow flag
Clear (0)	Clears OVF01 to 0 or TMC013 and TMC012 = 00
Set (1)	Overflow occurs.
OVF01 is set to 1 when the value of TM01 changes from FFFFH to 0000H in all the operation modes (free-running timer mode, clear & start mode entered by TI001 pin valid edge input, and clear & start mode entered upon a match between TM01 and CR001). It can also be set to 1 by writing 1 to OVF01.	

Note The TI001 pin valid edge is set by bits 5 and 4 (ES011, ES010) of prescaler mode register 01 (PRM01).

(2) Capture/compare control register 0n (CRC0n)

CRC0n is the register that controls the operation of CR00n and CR01n.

Changing the value of CRC0n is prohibited during operation (when TMC0n3 and TMC0n2 = other than 00).

CRC0n can be set by a 1-bit or 8-bit memory manipulation instruction.

Reset signal generation clears CRC0n to 00H.

Figure 7-8. Format of Capture/Compare Control Register 00 (CRC00)

Address: FFBCH After reset: 00H R/W

Symbol	7	6	5	4	3	2	1	0
CRC00	0	0	0	0	0	CRC002	CRC001	CRC000

CRC002	CR010 operating mode selection
0	Operates as compare register
1	Operates as capture register

CRC001	CR000 capture trigger selection
0	Captures on valid edge of TI010 pin
1	Captures on valid edge of TI000 pin by reverse phase[Note]
The valid edge of the TI010 and TI000 pin is set by PRM00. If ES001 and ES000 are set to 11 (both edges) when CRC001 is 1, the valid edge of the TI000 pin cannot be detected.	

CRC000	CR000 operating mode selection
0	Operates as compare register
1	Operates as capture register
If TMC003 and TMC002 are set to 11 (clear & start mode entered upon a match between TM00 and CR000), be sure to set CRC000 to 0.	

Note When the valid edge is detected from the TI010 pin, the capture operation is not performed but the INTTM000 signal is generated as an external interrupt signal.

Caution To ensure that the capture operation is performed properly, the capture trigger requires a pulse two cycles longer than the count clock selected by prescaler mode register 00 (PRM00).

Remark n = 0: 78K0/KE2 products whose flash memory is less than 32 KB, and 78K0/KB2, 78K0/KC2, 78K0/KD2 products

n = 0, 1: 78K0/KE2 products whose flash memory is at least 48 KB, and 78K0/KF2 products

Figure 7-9. Example of CR01n Capture Operation (When Rising Edge Is Specified)

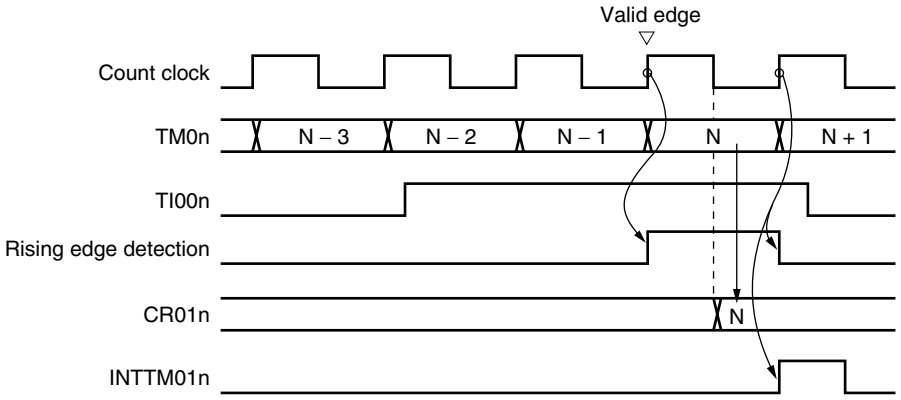

Figure 7-10. Format of Capture/Compare Control Register 01 (CRC01)

Address: FFB8H After reset: 00H R/W

Symbol	7	6	5	4	3	2	1	0
CRC01	0	0	0	0	0	CRC012	CRC011	CRC010

CRC012	CR011 operating mode selection
0	Operates as compare register
1	Operates as capture register

CRC011	CR001 capture trigger selection
0	Captures on valid edge of TI011 pin
1	Captures on valid edge of TI001 pin by reverse phase[Note]
The valid edge of the TI011 and TI001 pin is set by PRM01. If ES011 and ES010 are set to 11 (both edges) when CRC011 is 1, the valid edge of the TI001 pin cannot be detected.	

CRC010	CR001 operating mode selection
0	Operates as compare register
1	Operates as capture register
If TMC013 and TMC012 are set to 11 (clear & start mode entered upon a match between TM01 and CR001), be sure to set CRC010 to 0.	

Note When the valid edge is detected from the TI011 pin, the capture operation is not performed but the INTTM001 signal is generated as an external interrupt signal.

Caution To ensure that the capture operation is performed properly, the capture trigger requires a pulse two cycles longer than the count clock selected by prescaler mode register 01 (PRM01) (see Figure 7-9 Example of CR01n Capture Operation (When Rising Edge Is Specified)).

Remark n = 0: 78K0/KE2 products whose flash memory is less than 32 KB, and 78K0/KB2, 78K0/KC2, 78K0/KD2 products

n = 0, 1: 78K0/KE2 products whose flash memory is at least 48 KB, and 78K0/KF2 products

(3) 16-bit timer output control register 0n (TOC0n)

TOC0n is an 8-bit register that controls the TO0n output.

TOC0n can be rewritten while only OSPT0n is operating (when TMC0n3 and TMC0n2 = other than 00). Rewriting the other bits is prohibited during operation.

However, TOC0n4 can be rewritten during timer operation as a means to rewrite CR01n (see **7.5.1 Rewriting CR01n during TM0n operation**).

TOC0n can be set by a 1-bit or 8-bit memory manipulation instruction.

Reset signal generation clears TOC0n to 00H.

Caution Be sure to set TOC0n using the following procedure.

<1> Set TOC0n4 and TOC0n1 to 1.

<2> Set only TOE0n to 1.

<3> Set either of LVS0n or LVR0n to 1.

Remark n = 0: 78K0/KE2 products whose flash memory is less than 32 KB, and 78K0/KB2, 78K0/KC2, 78K0/KD2 products

n = 0, 1: 78K0/KE2 products whose flash memory is at least 48 KB, and 78K0/KF2 products

Figure 7-11. Format of 16-Bit Timer Output Control Register 00 (TOC00)

Address: FFBDH After reset: 00H R/W

Symbol	7	<6>	<5>	4	<3>	<2>	1	<0>
TOC00	0	OSPT00	OSPE00	TOC004	LVS00	LVR00	TOC001	TOE00

OSPT00	One-shot pulse output trigger via software
0	–
1	One-shot pulse output
The value of this bit is always “0” when it is read. Do not set this bit to 1 in a mode other than the one-shot pulse output mode. If it is set to 1, TM00 is cleared and started.	

OSPE00	One-shot pulse output operation control
0	Successive pulse output
1	One-shot pulse output
One-shot pulse output operates correctly in the free-running timer mode or clear & start mode entered by TI000 pin valid edge input. The one-shot pulse cannot be output in the clear & start mode entered upon a match between TM00 and CR000.	

TOC004	TO00 output control on match between CR010 and TM00
0	Disables inversion operation
1	Enables inversion operation
The interrupt signal (INTTM010) is generated even when TOC004 = 0.	

LVS00	LVR00	Setting of TO00 output status
0	0	No change
0	1	Initial value of TO00 output is low level (TO00 output is cleared to 0).
1	0	Initial value of TO00 output is high level (TO00 output is set to 1).
1	1	Setting prohibited

- LVS00 and LVR00 can be used to set the initial value of the TO00 output level. If the initial value does not have to be set, leave LVS00 and LVR00 as 00.
- Be sure to set LVS00 and LVR00 when TOE00 = 1.
  LVS00, LVR00, and TOE00 being simultaneously set to 1 is prohibited.
- LVS00 and LVR00 are trigger bits. By setting these bits to 1, the initial value of the TO00 output level can be set. Even if these bits are cleared to 0, TO00 output is not affected.
- The values of LVS00 and LVR00 are always 0 when they are read.
- For how to set LVS00 and LVR00, see **7.5.2 Setting LVS0n and LVR0n**.
- The actual TO00/TI010/P01 pin output is determined depending on PM01 and P01, besides TO00 output.

TOC001	TO00 output control on match between CR000 and TM00
0	Disables inversion operation
1	Enables inversion operation
The interrupt signal (INTTM000) is generated even when TOC001 = 0.	

TOE00	TO00 output control
0	Disables output (TO00 output fixed to low level)
1	Enables output

Figure 7-12. Format of 16-Bit Timer Output Control Register 01 (TOC01)

Address: FFB9H After reset: 00H R/W

Symbol	7	<6>	<5>	4	<3>	<2>	1	<0>
TOC01	0	OSPT01	OSPE01	TOC014	LVS01	LVR01	TOC011	TOE01

OSPT01	One-shot pulse output trigger via software
0	–
1	One-shot pulse output
The value of this bit is always 0 when it is read. Do not set this bit to 1 in a mode other than the one-shot pulse output mode. If it is set to 1, TM01 is cleared and started.	

OSPE01	One-shot pulse output operation control
0	Successive pulse output
1	One-shot pulse output
One-shot pulse output operates correctly in the free-running timer mode or clear & start mode entered by TI001 pin valid edge input. The one-shot pulse cannot be output in the clear & start mode entered upon a match between TM01 and CR001.	

TOC014	TO01 output control on match between CR011 and TM01
0	Disables inversion operation
1	Enables inversion operation
The interrupt signal (INTTM011) is generated even when TOC014 = 0.	

LVS01	LVR01	Setting of TO01 output status
0	0	No change
0	1	Initial value of TO01 output is low level (TO01 output is cleared to 0).
1	0	Initial value of TO01 output is high level (TO01 output is set to 1).
1	1	Setting prohibited

- LVS01 and LVR01 can be used to set the initial value of the TO01 output level. If the initial value does not have to be set, leave LVS01 and LVR01 as 00.
- Be sure to set LVS01 and LVR01 when TOE01 = 1.
  LVS01, LVR01, and TOE01 being simultaneously set to 1 is prohibited.
- LVS01 and LVR01 are trigger bits. By setting these bits to 1, the initial value of the TO01 output level can be set. Even if these bits are cleared to 0, TO01 output is not affected.
- The values of LVS01 and LVR01 are always 0 when they are read.
- For how to set LVS01 and LVR01, see **7.5.2 Setting LVS0n and LVR0n**.
- The actual TO01/TI011/P06 pin output is determined depending on PM06 and P06, besides TO01 output.

TOC011	TO01 output control on match between CR001 and TM01
0	Disables inversion operation
1	Enables inversion operation
The interrupt signal (INTTM001) is generated even when TOC011 = 0.	

TOE01	TO01 output control
0	Disables output (TO01 output is fixed to low level)
1	Enables output

(4) Prescaler mode register 0n (PRM0n)

PRM0n is the register that sets the TM0n count clock and TI00n and TI01n pin input valid edges.

Rewriting PRM0n is prohibited during operation (when TMC0n3 and TMC0n2 = other than 00).

PRM0n can be set by a 1-bit or 8-bit memory manipulation instruction.

Reset signal generation clears PRM0n to 00H.

Cautions 1. Do not apply the following setting when setting the PRM0n1 and PRM0n0 bits to 11 (to specify the valid edge of the TI00n pin as a count clock).

- **Clear & start mode entered by the TI00n pin valid edge**
- **Setting the TI00n pin as a capture trigger**

2. If the operation of the 16-bit timer/event counter 0n is enabled when the TI00n or TI01n pin is at high level and when the valid edge of the TI00n or TI01n pin is specified to be the rising edge or both edges, the high level of the TI00n or TI01n pin is detected as a rising edge. Note this when the TI00n or TI01n pin is pulled up. However, the rising edge is not detected when the timer operation has been once stopped and then is enabled again.

3. The valid edge of TI010 and timer output (TO00) cannot be used for the P01 pin at the same time, and the valid edge of TI011 and timer output (TO01) cannot be used for the P06 pin at the same time. Select either of the functions.

Remark n = 0: 78K0/KE2 products whose flash memory is less than 32 KB, and 78K0/KB2, 78K0/KC2, 78K0/KD2 products

n = 0, 1: 78K0/KE2 products whose flash memory is at least 48 KB, and 78K0/KF2 products

Figure 7-13. Format of Prescaler Mode Register 00 (PRM00)

Address: FFBBH After reset: 00H R/W

Symbol	7	6	5	4	3	2	1	0
PRM00	ES101	ES100	ES001	ES000	0	0	PRM001	PRM000

ES101	ES100	TI010 pin valid edge selection
0	0	Falling edge
0	1	Rising edge
1	0	Setting prohibited
1	1	Both falling and rising edges

ES001	ES000	TI000 pin valid edge selection
0	0	Falling edge
0	1	Rising edge
1	0	Setting prohibited
1	1	Both falling and rising edges

PRM001	PRM000	Count clock selection[Note 1]				
			f_{PRS} = 2 MHz	f_{PRS} = 5 MHz	f_{PRS} = 10 MHz	f_{PRS} = 20 MHz
0	0	f_{PRS}[Note 2]	2 MHz	5 MHz	10 MHz	20 MHz[Note 3]
0	1	$f_{PRS}/2^2$	500 kHz	1.25 MHz	2.5 MHz	5 MHz
1	0	$f_{PRS}/2^8$	7.81 kHz	19.53 kHz	39.06 kHz	78.12 kHz
1	1	TI000 valid edge[Notes 4, 5]				

Notes 1. The frequency that can be used for the peripheral hardware clock (f_{PRS}) differs depending on the power supply voltage and product specifications.

Supply Voltage	Conventional-specification Products (μPD78F05xx and 78F05xxD)	Expanded-specification Products (μPD78F05xxA and 78F05xxDA)
4.0 V ≤ V_{DD} ≤ 5.5 V	f_{PRS} ≤ 20 MHz	f_{PRS} ≤ 20 MHz
2.7 V ≤ V_{DD} < 4.0 V	f_{PRS} ≤ 10 MHz	
1.8 V ≤ V_{DD} < 2.7 V (Standard products and (A) grade products only)	f_{PRS} ≤ 5 MHz	f_{PRS} ≤ 5 MHz

(The values shown in the table above are those when f_{PRS} = f_{XH} (XSEL = 1).)

2. If the peripheral hardware clock (f_{PRS}) operates on the internal high-speed oscillation clock (f_{RH}) (XSEL = 0), when 1.8 V ≤ V_{DD} < 2.7 V, the setting of PRM001 = PRM000 = 0 (count clock: f_{PRS}) is prohibited.

3. This is settable only if 4.0 V ≤ V_{DD} ≤ 5.5 V.

4. The external clock from the TI000 pin requires a pulse longer than twice the cycle of the peripheral hardware clock (f_{PRS}).

5. Do not start timer operation with the external clock from the TI000 pin when the internal high-speed oscillation clock and high-speed system clock are stopped while the CPU operates with the subsystem clock, or when in the STOP mode.

Remark f_{PRS}: Peripheral hardware clock frequency

Figure 7-14. Format of Prescaler Mode Register 01 (PRM01)

Address: FFB7H After reset: 00H R/W

Symbol	7	6	5	4	3	2	1	0
PRM01	ES111	ES110	ES011	ES010	0	0	PRM011	PRM010

ES111	ES110	TI011 pin valid edge selection
0	0	Falling edge
0	1	Rising edge
1	0	Setting prohibited
1	1	Both falling and rising edges

ES011	ES010	TI001 pin valid edge selection
0	0	Falling edge
0	1	Rising edge
1	0	Setting prohibited
1	1	Both falling and rising edges

PRM011	PRM010	Count clock selection[Note 1]				
			f_{PRS} = 2 MHz	f_{PRS} = 5 MHz	f_{PRS} = 10 MHz	f_{PRS} = 20 MHz
0	0	f_{PRS}[Note 2]	2 MHz	5 MHz	10 MHz	20 MHz[Note 3]
0	1	$f_{PRS}/2^4$	125 kHz	312.5 kHz	625 kHz	1.25 MHz
1	0	$f_{PRS}/2^6$	31.25 kHz	78.125 kHz	156.25 kHz	312.5 kHz
1	1	TI001 valid edge[Notes 4, 5]				

Notes 1. The frequency that can be used for the peripheral hardware clock (f_{PRS}) differs depending on the power supply voltage and product specifications.

Supply Voltage	Conventional-specification Products (μPD78F05xx and 78F05xxD)	Expanded-specification Products (μPD78F05xxA and 78F05xxDA)
4.0 V ≤ V_{DD} ≤ 5.5 V	f_{PRS} ≤ 20 MHz	f_{PRS} ≤ 20 MHz
2.7 V ≤ V_{DD} < 4.0 V	f_{PRS} ≤ 10 MHz	
1.8 V ≤ V_{DD} < 2.7 V (Standard products and (A) grade products only)	f_{PRS} ≤ 5 MHz	f_{PRS} ≤ 5 MHz

(The values shown in the table above are those when $f_{PRS} = f_{XH}$ (XSEL = 1).)

2. If the peripheral hardware clock (f_{PRS}) operates on the internal high-speed oscillation clock (f_{RH}) (XSEL = 0), when 1.8 V ≤ V_{DD} < 2.7 V, the setting of PRM011 = PRM010 = 0 (count clock: f_{PRS}) is prohibited.

3. This is settable only if 4.0 V ≤ V_{DD} ≤ 5.5 V.

4. The external clock from the TI001 pin requires a pulse longer than twice the cycle of the peripheral hardware clock (f_{PRS}).

5. Do not start timer operation with the external clock from the TI001 pin when the internal high-speed oscillation clock and high-speed system clock are stopped while the CPU operates with the subsystem clock, or when in the STOP mode.

Remark f_{PRS}: Peripheral hardware clock frequency

(5) Port mode register 0 (PM0)

This register sets port 0 input/output in 1-bit units.

When using the P01/TO00/TI010 and P06/TO01/TI011 pins for timer output, set PM01 and PM06 and the output latches of P01 and P06 to 0.

When using the P00/TI000, P01/TO00/TI010, P05/TI001/$\overline{\text{SSI11}}$, and P06/TO01/TI011 pins for timer input, set PM00, PM01, PM05, and PM06 to 1. At this time, the output latches of P00, P01, P05, and P06 may be 0 or 1.

PM0 can be set by a 1-bit or 8-bit memory manipulation instruction.

Reset signal generation sets PM0 to FFH.

Figure 7-15. Format of Port Mode Register 0 (PM0)

Address: FF20H After reset: FFH R/W

Symbol	7	6	5	4	3	2	1	0
PM0	1	PM06	PM05	PM04	PM03	PM02	PM01	PM00

PM0n	P0n pin I/O mode selection (n = 0 to 6)
0	Output mode (output buffer on)
1	Input mode (output buffer off)

Remark The figure shown above presents the format of port mode register 0 of 78K0/KF2 products. For the format of port mode register 0 of other products, see **(1) Port mode registers (PMxx)** in **5.3 Registers Controlling Port Function**.

7.4 Operation of 16-Bit Timer/Event Counters 00 and 01

7.4.1 Interval timer operation

If bits 3 and 2 (TMC0n3 and TMC0n2) of the 16-bit timer mode control register (TMC0n) are set to 11 (clear & start mode entered upon a match between TM0n and CR00n), the count operation is started in synchronization with the count clock.

When the value of TM0n later matches the value of CR00n, TM0n is cleared to 0000H and a match interrupt signal (INTTM00n) is generated. This INTTM00n signal enables TM0n to operate as an interval timer.

Remarks 1. For the setting of I/O pins, see **7.3 (5) Port mode register 0 (PM0)**.

2. For how to enable the INTTM00n interrupt, see **CHAPTER 20 INTERRUPT FUNCTIONS**.

Figure 7-16. Block Diagram of Interval Timer Operation

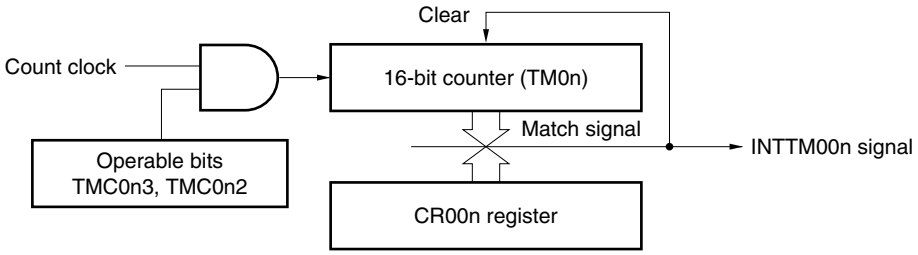

Figure 7-17. Basic Timing Example of Interval Timer Operation

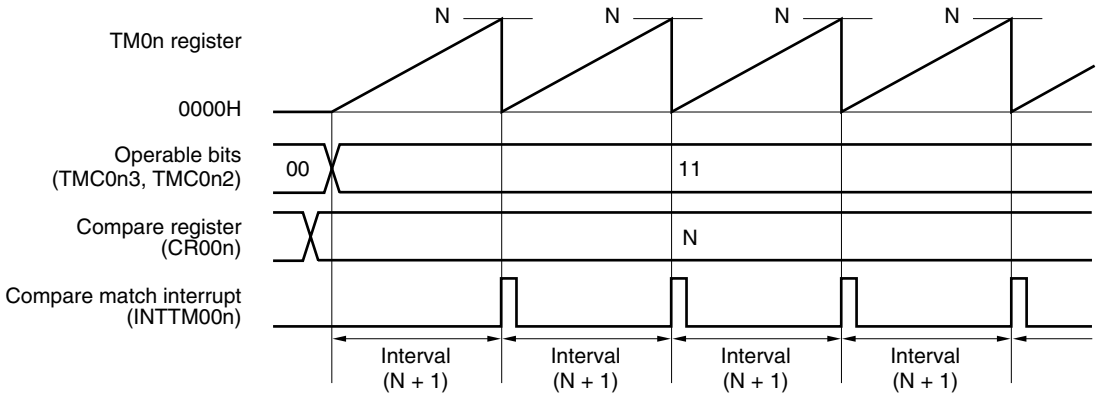

Remark n = 0: 78K0/KE2 products whose flash memory is less than 32 KB, and 78K0/KB2, 78K0/KC2, 78K0/KD2 products

n = 0, 1: 78K0/KE2 products whose flash memory is at least 48 KB, and 78K0/KF2 products

Figure 7-18. Example of Register Settings for Interval Timer Operation

(a) 16-bit timer mode control register 0n (TMC0n)

				TMC0n3	TMC0n2	TMC0n1	OVF0n
0	0	0	0	1	1	0	0

Clears and starts on match between TM0n and CR00n.

(b) Capture/compare control register 0n (CRC0n)

					CRC0n2	CRC0n1	CRC0n0
0	0	0	0	0	0	0	0

CR00n used as compare register

(c) 16-bit timer output control register 0n (TOC0n)

	OSPT0n	OSPE0n	TOC0n4	LVS0n	LVR0n	TOC0n1	TOE0n
0	0	0	0	0	0	0	0

(d) Prescaler mode register 0n (PRM0n)

ES1n1	ES1n0	ES0n1	ES0n0	3	2	PRM0n1	PRM0n0
0	0	0	0	0	0	0/1	0/1

Selects count clock

(e) 16-bit timer counter 0n (TM0n)

By reading TM0n, the count value can be read.

(f) 16-bit capture/compare register 00n (CR00n)

If M is set to CR00n, the interval time is as follows.

- Interval time = (M + 1) × Count clock cycle

Setting CR00n to 0000H is prohibited.

(g) 16-bit capture/compare register 01n (CR01n)

Usually, CR01n is not used for the interval timer function. However, a compare match interrupt (INTTM01n) is generated when the set value of CR01n matches the value of TM0n.

Therefore, mask the interrupt request by using the interrupt mask flag (TMMK01n).

Remark n = 0: 78K0/KE2 products whose flash memory is less than 32 KB, and 78K0/KB2, 78K0/KC2, 78K0/KD2 products

n = 0, 1: 78K0/KE2 products whose flash memory is at least 48 KB, and 78K0/KF2 products

Figure 7-19. Example of Software Processing for Interval Timer Function

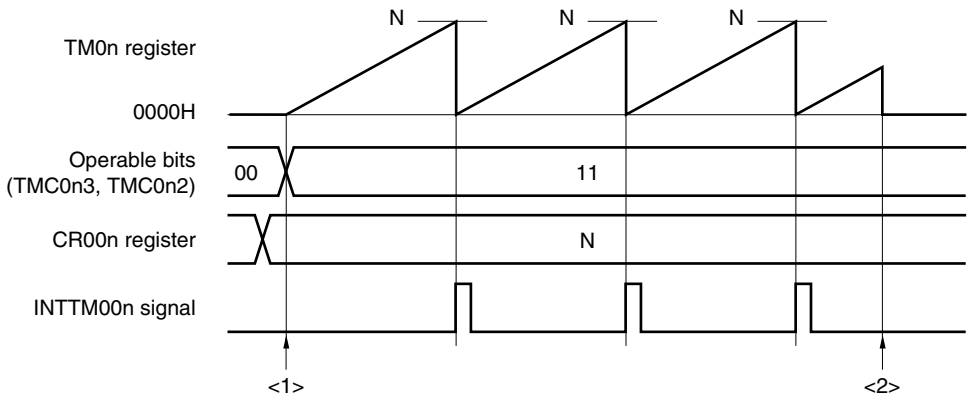

<1> Count operation start flow

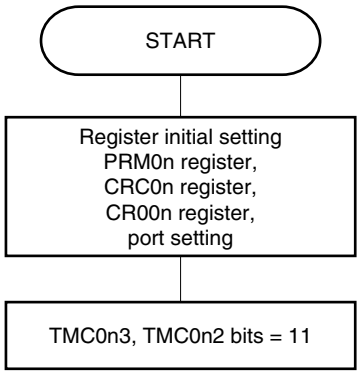

Initial setting of these registers is performed before setting the TMC0n3 and TMC0n2 bits to 11.

Starts count operation

<2> Count operation stop flow

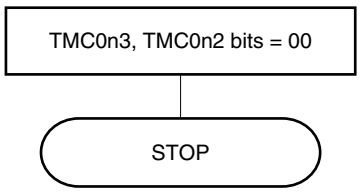

The counter is initialized and counting is stopped by clearing the TMC0n3 and TMC0n2 bits to 00.

Remark n = 0: 78K0/KE2 products whose flash memory is less than 32 KB, and 78K0/KB2, 78K0/KC2, 78K0/KD2 products

n = 0, 1: 78K0/KE2 products whose flash memory is at least 48 KB, and 78K0/KF2 products

7.4.2 Square-wave output operation

When 16-bit timer/event counter 0n operates as an interval timer (see **7.4.1**), a square wave can be output from the TO0n pin by setting the 16-bit timer output control register 0n (TOC0n) to 03H.

When TMC0n3 and TMC0n2 are set to 11 (count clear & start mode entered upon a match between TM0n and CR00n), the counting operation is started in synchronization with the count clock.

When the value of TM0n later matches the value of CR00n, TM0n is cleared to 0000H, an interrupt signal (INTTM00n) is generated, and TO0n output is inverted. This TO0n output that is inverted at fixed intervals enables TO0n to output a square wave.

Remarks 1. For the setting of I/O pins, see **7.3 (5) Port mode register 0 (PM0)**.

2. For how to enable the INTTM00n signal interrupt, see **CHAPTER 20 INTERRUPT FUNCTIONS**.

Figure 7-20. Block Diagram of Square-Wave Output Operation

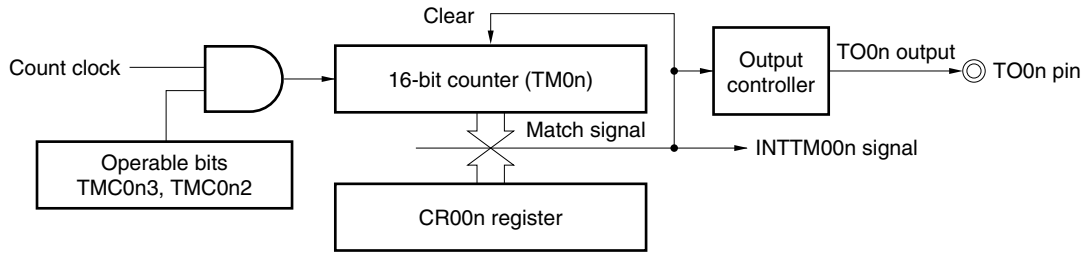

Figure 7-21. Basic Timing Example of Square-Wave Output Operation

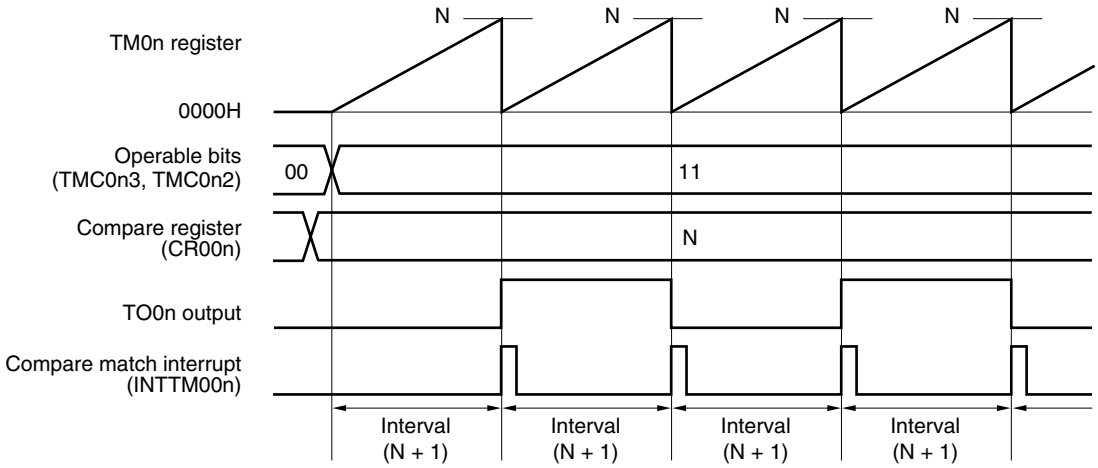

Remark n = 0: 78K0/KE2 products whose flash memory is less than 32 KB, and 78K0/KB2, 78K0/KC2, 78K0/KD2 products

n = 0, 1: 78K0/KE2 products whose flash memory is at least 48 KB, and 78K0/KF2 products

Figure 7-22. Example of Register Settings for Square-Wave Output Operation

(a) 16-bit timer mode control register 0n (TMC0n)

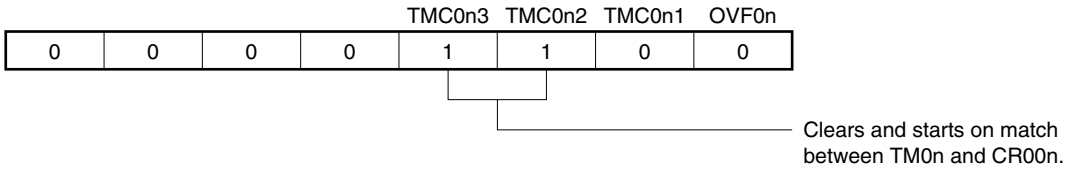

(b) Capture/compare control register 0n (CRC0n)

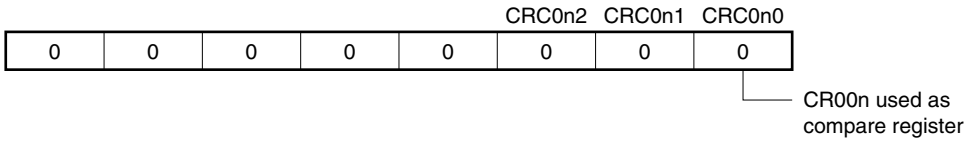

(c) 16-bit timer output control register 0n (TOC0n)

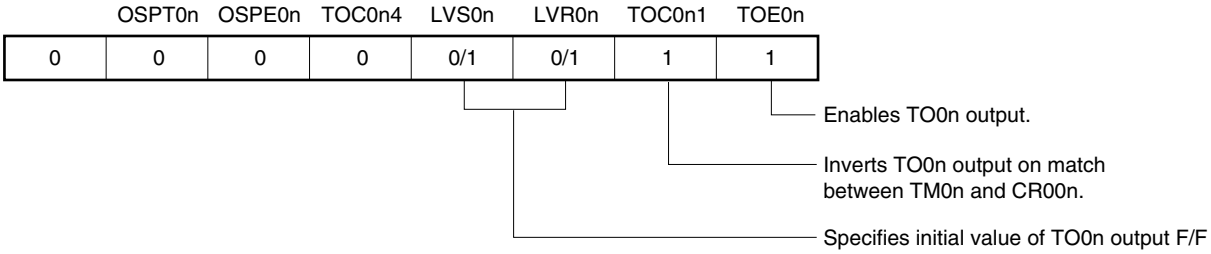

(d) Prescaler mode register 0n (PRM0n)

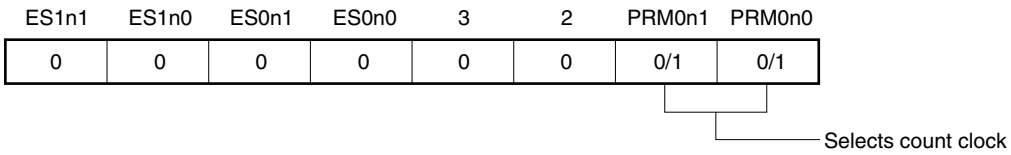

(e) 16-bit timer counter 0n (TM0n)

By reading TM0n, the count value can be read.

(f) 16-bit capture/compare register 00n (CR00n)

If M is set to CR00n, the interval time is as follows.

- Square wave frequency = 1 / [2 × (M + 1) × Count clock cycle]

Setting CR00n to 0000H is prohibited.

(g) 16-bit capture/compare register 01n (CR01n)

Usually, CR01n is not used for the square-wave output function. However, a compare match interrupt (INTTM01n) is generated when the set value of CR01n matches the value of TM0n.

Therefore, mask the interrupt request by using the interrupt mask flag (TMMK01n).

Remark n = 0: 78K0/KE2 products whose flash memory is less than 32 KB, and 78K0/KB2, 78K0/KC2, 78K0/KD2 products

n = 0, 1: 78K0/KE2 products whose flash memory is at least 48 KB, and 78K0/KF2 products

Figure 7-23. Example of Software Processing for Square-Wave Output Function

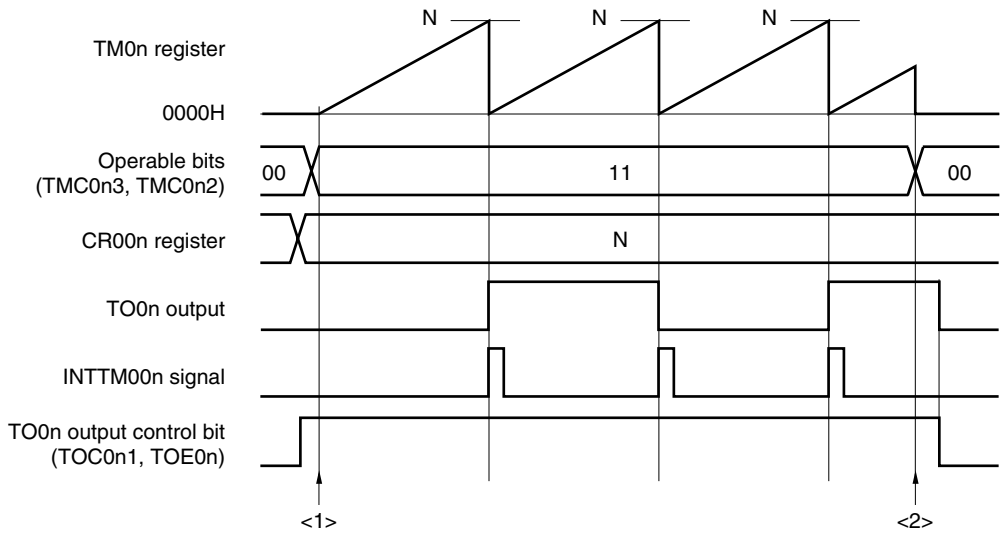

<1> Count operation start flow

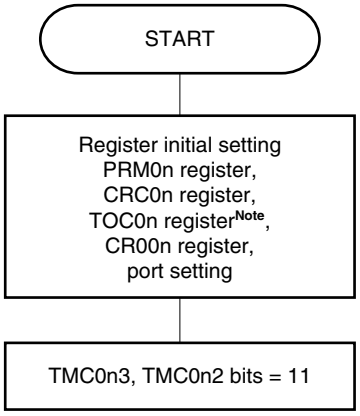

Initial setting of these registers is performed before setting the TMC0n3 and TMC0n2 bits to 11.

Starts count operation

<2> Count operation stop flow

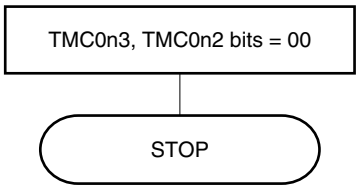

The counter is initialized and counting is stopped by clearing the TMC0n3 and TMC0n2 bits to 00.

Note Care must be exercised when setting TOC0n. For details, see **7.3 (3) 16-bit timer output control register 0n (TOC0n)**.

Remark n = 0: 78K0/KE2 products whose flash memory is less than 32 KB, and 78K0/KB2, 78K0/KC2, 78K0/KD2 products

n = 0, 1: 78K0/KE2 products whose flash memory is at least 48 KB, and 78K0/KF2 products

7.4.3 External event counter operation

When bits 1 and 0 (PRM0n1 and PRM0n0) of the prescaler mode register 0n (PRM0n) are set to 11 (for counting up with the valid edge of the TI00n pin) and bits 3 and 2 (TMC0n3 and TMC0n2) of 16-bit timer mode control register 0n (TMC0n) are set to 11, the valid edge of an external event input is counted, and a match interrupt signal indicating matching between TM0n and CR00n (INTTM00n) is generated.

To input the external event, the TI00n pin is used. Therefore, the timer/event counter cannot be used as an external event counter in the clear & start mode entered by the TI00n pin valid edge input (when TMC0n3 and TMC0n2 = 10).

The INTTM00n signal is generated with the following timing.

- Timing of generation of INTTM00n signal (second time or later)
  = Number of times of detection of valid edge of external event × (Set value of CR00n + 1)

However, the first match interrupt immediately after the timer/event counter has started operating is generated with the following timing.

- Timing of generation of INTTM00n signal (first time only)
  = Number of times of detection of valid edge of external event input × (Set value of CR00n + 2)

To detect the valid edge, the signal input to the TI00n pin is sampled during the clock cycle of f_{PRS}. The valid edge is not detected until it is detected two times in a row. Therefore, a noise with a short pulse width can be eliminated.

Remarks 1. For the setting of I/O pins, see **7.3 (5) Port mode register 0 (PM0)**.

2. For how to enable the INTTM00n signal interrupt, see **CHAPTER 20 INTERRUPT FUNCTIONS**.

Figure 7-24. Block Diagram of External Event Counter Operation

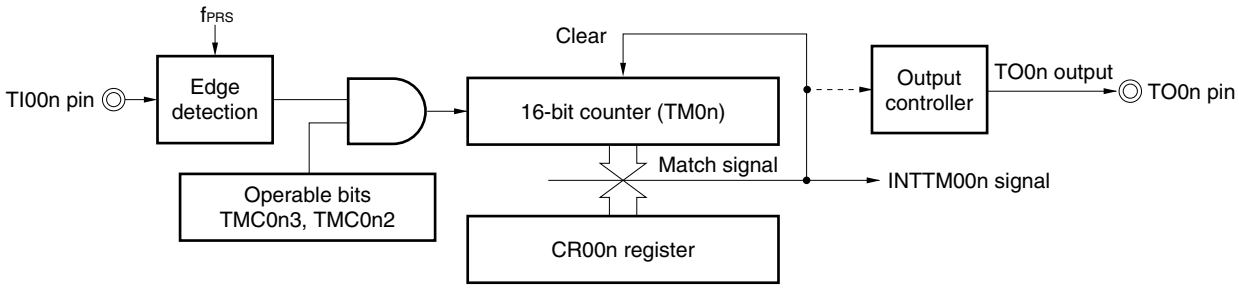

Remark n = 0: 78K0/KE2 products whose flash memory is less than 32 KB, and 78K0/KB2, 78K0/KC2, 78K0/KD2 products

n = 0, 1: 78K0/KE2 products whose flash memory is at least 48 KB, and 78K0/KF2 products

Figure 7-25. Example of Register Settings in External Event Counter Mode (1/2)

(a) 16-bit timer mode control register 0n (TMC0n)

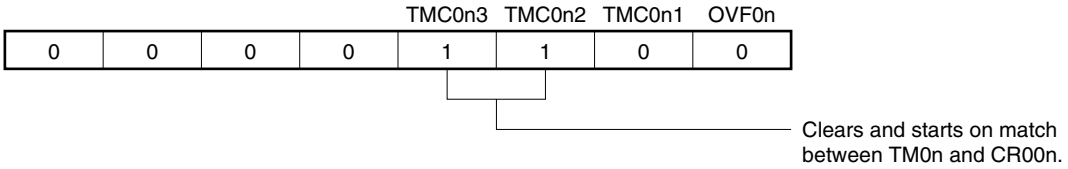

(b) Capture/compare control register 0n (CRC0n)

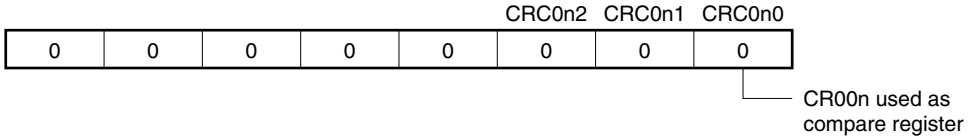

(c) 16-bit timer output control register 0n (TOC0n)

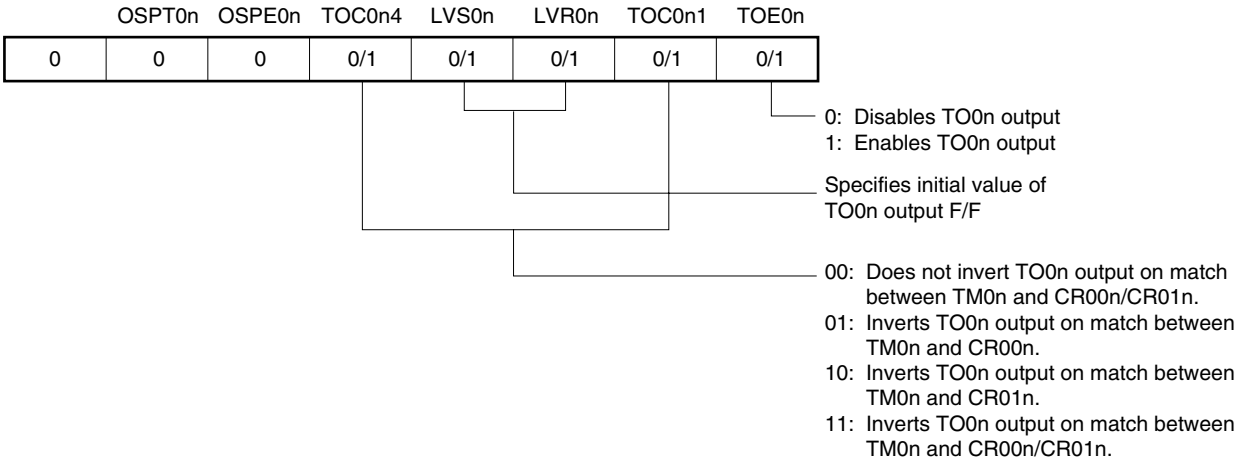

(d) Prescaler mode register 0n (PRM0n)

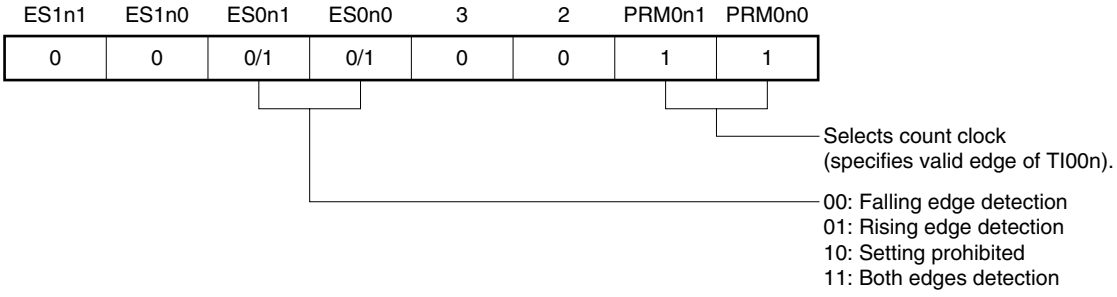

Remark n = 0: 78K0/KE2 products whose flash memory is less than 32 KB, and 78K0/KB2, 78K0/KC2, 78K0/KD2 products

n = 0, 1: 78K0/KE2 products whose flash memory is at least 48 KB, and 78K0/KF2 products

Figure 7-25. Example of Register Settings in External Event Counter Mode (2/2)

(e) 16-bit timer counter 0n (TM0n)

By reading TM0n, the count value can be read.

(f) 16-bit capture/compare register 00n (CR00n)

If M is set to CR00n, the interrupt signal (INTTM00n) is generated when the number of external events reaches (M + 1).

Setting CR00n to 0000H is prohibited.

(g) 16-bit capture/compare register 01n (CR01n)

Usually, CR01n is not used in the external event counter mode. However, a compare match interrupt (INTTM01n) is generated when the set value of CR01n matches the value of TM0n.

Therefore, mask the interrupt request by using the interrupt mask flag (TMMK01n).

Remark n = 0: 78K0/KE2 products whose flash memory is less than 32 KB, and 78K0/KB2, 78K0/KC2, 78K0/KD2 products

n = 0, 1: 78K0/KE2 products whose flash memory is at least 48 KB, and 78K0/KF2 products

Figure 7-26. Example of Software Processing in External Event Counter Mode

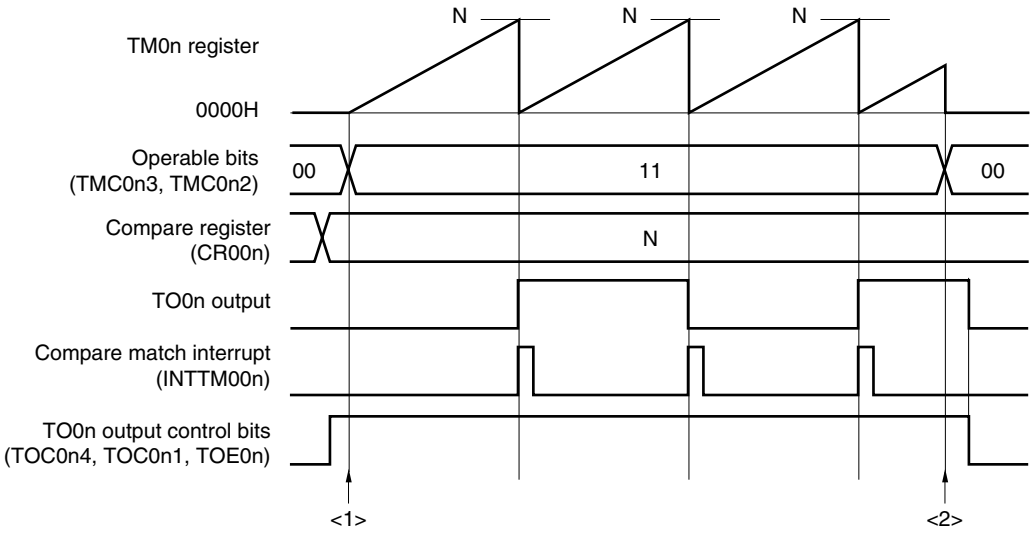

<1> Count operation start flow

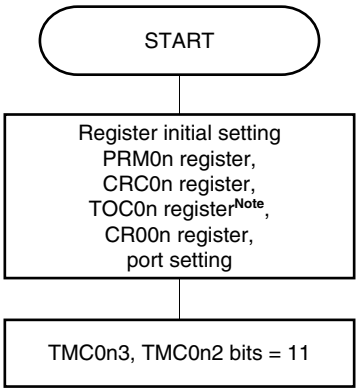

Initial setting of these registers is performed before setting the TMC0n3 and TMC0n2 bits to 11.

Starts count operation

<2> Count operation stop flow

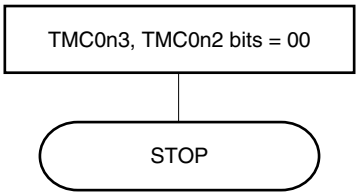

The counter is initialized and counting is stopped by clearing the TMC0n3 and TMC0n2 bits to 00.

Note Care must be exercised when setting TOC0n. For details, see **7.3 (3) 16-bit timer output control register 0n (TOC0n)**.

Remark n = 0: 78K0/KE2 products whose flash memory is less than 32 KB, and 78K0/KB2, 78K0/KC2, 78K0/KD2 products

n = 0, 1: 78K0/KE2 products whose flash memory is at least 48 KB, and 78K0/KF2 products

7.4.4 Operation in clear & start mode entered by TI00n pin valid edge input

When bits 3 and 2 (TMC0n3 and TMC0n2) of 16-bit timer mode control register 0n (TMC0n) are set to 10 (clear & start mode entered by the TI00n pin valid edge input) and the count clock (set by PRM0n) is supplied to the timer/event counter, TM0n starts counting up. When the valid edge of the TI00n pin is detected during the counting operation, TM0n is cleared to 0000H and starts counting up again. If the valid edge of the TI00n pin is not detected, TM0n overflows and continues counting.

The valid edge of the TI00n pin is a cause to clear TM0n. Starting the counter is not controlled immediately after the start of the operation.

CR00n and CR01n are used as compare registers and capture registers.

(a) When CR00n and CR01n are used as compare registers

Signals INTTM00n and INTTM01n are generated when the value of TM0n matches the value of CR00n and CR01n.

(b) When CR00n and CR01n are used as capture registers

The count value of TM0n is captured to CR00n and the INTTM00n signal is generated when the valid edge is input to the TI01n pin (or when the phase reverse to that of the valid edge is input to the TI00n pin).

When the valid edge is input to the TI00n pin, the count value of TM0n is captured to CR01n and the INTTM01n signal is generated. As soon as the count value has been captured, the counter is cleared to 0000H.

<R> **Caution Do not set the count clock as the valid edge of the TI00n pin (PRM0n1 and PRM0n0 = 11). When PRM0n1 and PRM0n0 = 11, TM0n may be cleared.**

Remarks 1. For the setting of the I/O pins, see **7.3 (5) Port mode register 0 (PM0)**.

2. For how to enable the INTTM00n signal interrupt, see **CHAPTER 20 INTERRUPT FUNCTIONS**.

(1) Operation in clear & start mode entered by TI00n pin valid edge input (CR00n: compare register, CR01n: compare register)

Figure 7-27. Block Diagram of Clear & Start Mode Entered by TI00n Pin Valid Edge Input (CR00n: Compare Register, CR01n: Compare Register)

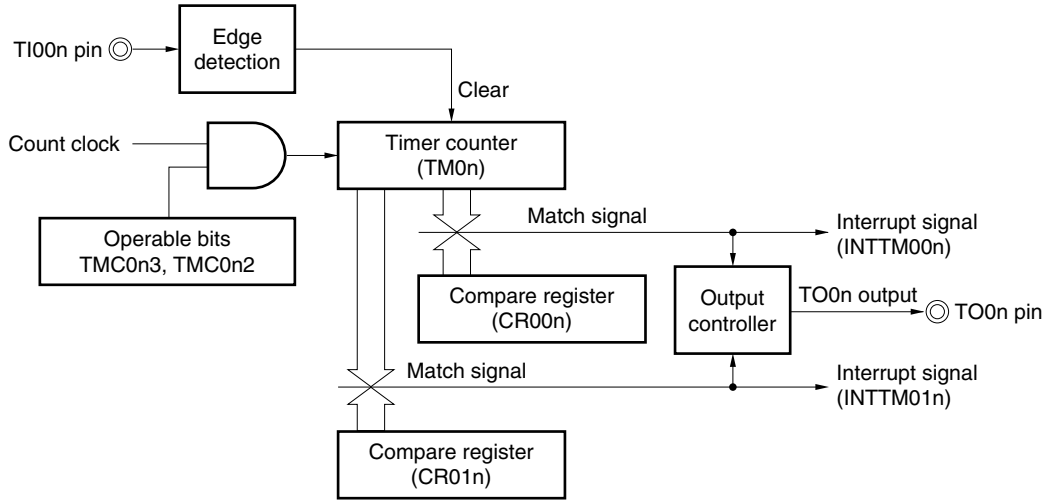

Remark n = 0: 78K0/KE2 products whose flash memory is less than 32 KB, and 78K0/KB2, 78K0/KC2, 78K0/KD2 products

n = 0, 1: 78K0/KE2 products whose flash memory is at least 48 KB, and 78K0/KF2 products

Figure 7-28. Timing Example of Clear & Start Mode Entered by TI00n Pin Valid Edge Input (CR00n: Compare Register, CR01n: Compare Register)

(a) TOC0n = 13H, PRM0n = 10H, CRC0n, = 00H, TMC0n = 08H

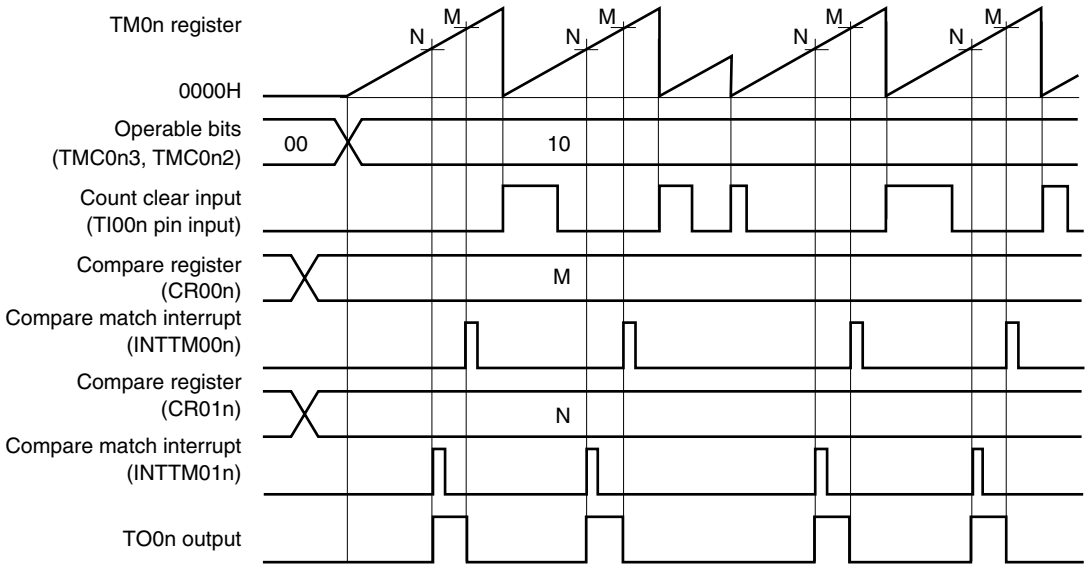

(b) TOC0n = 13H, PRM0n = 10H, CRC0n, = 00H, TMC0n = 0AH

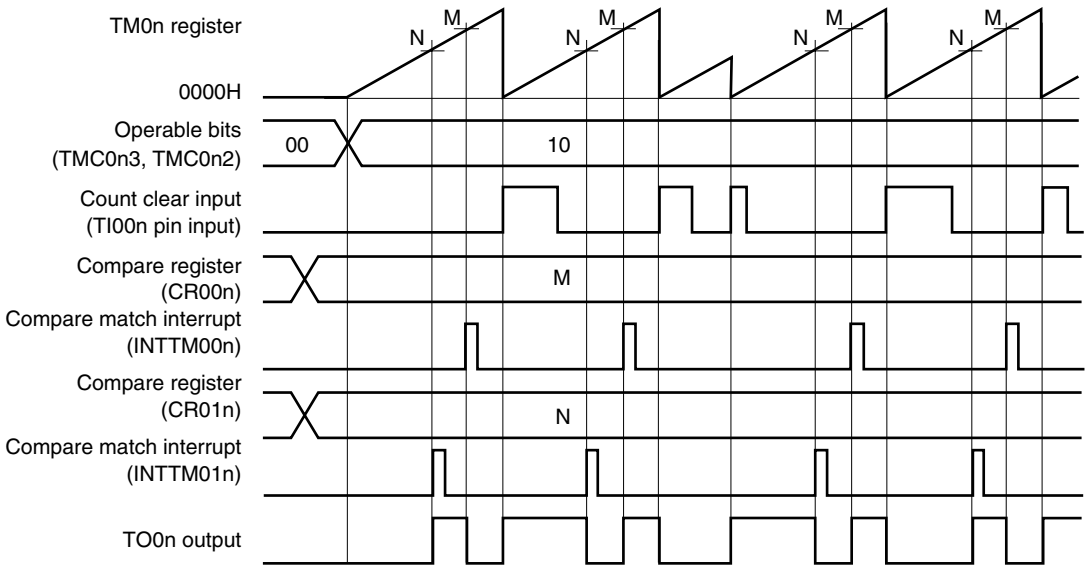

(a) and (b) differ as follows depending on the setting of bit 1 (TMC0n1) of the 16-bit timer mode control register 0n (TMC0n).

(a) The TO0n output level is inverted when TM0n matches a compare register.

(b) The TO0n output level is inverted when TM0n matches a compare register or when the valid edge of the TI00n pin is detected.

Remark n = 0: 78K0/KE2 products whose flash memory is less than 32 KB, and 78K0/KB2, 78K0/KC2, 78K0/KD2 products

n = 0, 1: 78K0/KE2 products whose flash memory is at least 48 KB, and 78K0/KF2 products

(2) Operation in clear & start mode entered by TI00n pin valid edge input
(CR00n: compare register, CR01n: capture register)

Figure 7-29. Block Diagram of Clear & Start Mode Entered by TI00n Pin Valid Edge Input (CR00n: Compare Register, CR01n: Capture Register)

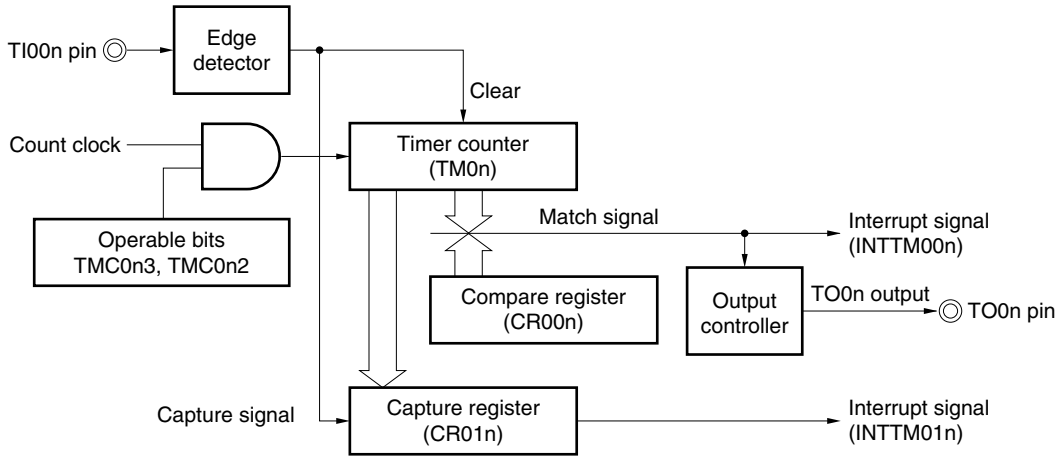

Figure 7-30. Timing Example of Clear & Start Mode Entered by TI00n Pin Valid Edge Input (CR00n: Compare Register, CR01n: Capture Register) (1/2)

(a) TOC0n = 13H, PRM0n = 10H, CRC0n, = 04H, TMC0n = 08H, CR00n = 0001H

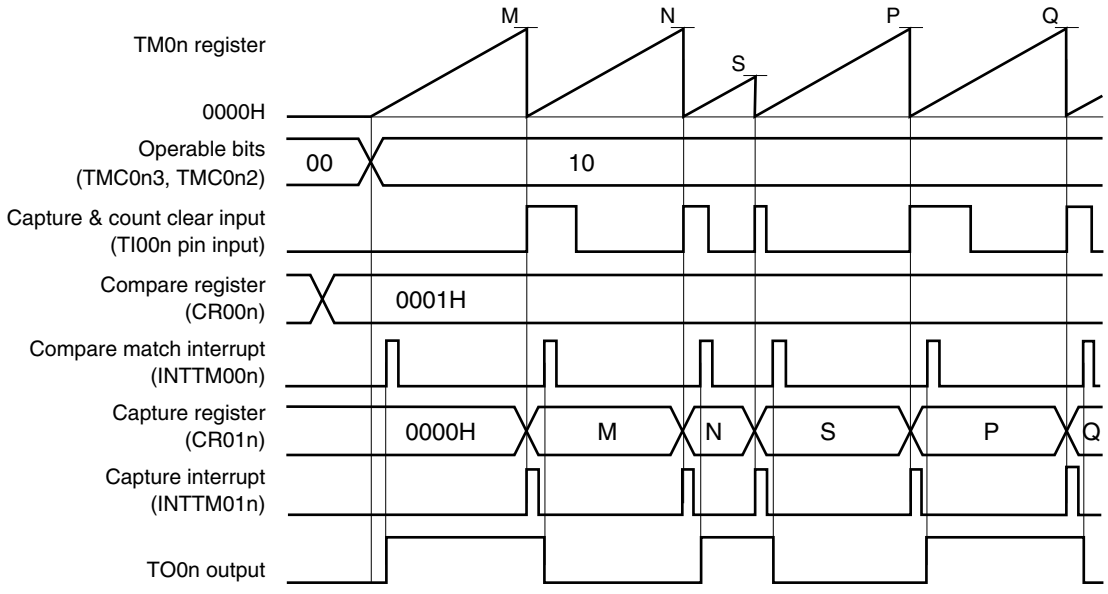

This is an application example where the TO0n output level is inverted when the count value has been captured & cleared.

The count value is captured to CR01n and TM0n is cleared (to 0000H) when the valid edge of the TI00n pin is detected. When the count value of TM0n is 0001H, a compare match interrupt signal (INTTM00n) is generated, and the TO0n output level is inverted.

Remark n = 0: 78K0/KE2 products whose flash memory is less than 32 KB, and 78K0/KB2, 78K0/KC2, 78K0/KD2 products

n = 0, 1: 78K0/KE2 products whose flash memory is at least 48 KB, and 78K0/KF2 products

Figure 7-30. Timing Example of Clear & Start Mode Entered by TI00n Pin Valid Edge Input (CR00n: Compare Register, CR01n: Capture Register) (2/2)

(b) TOC0n = 13H, PRM0n = 10H, CRC0n, = 04H, TMC0n = 0AH, CR00n = 0003H

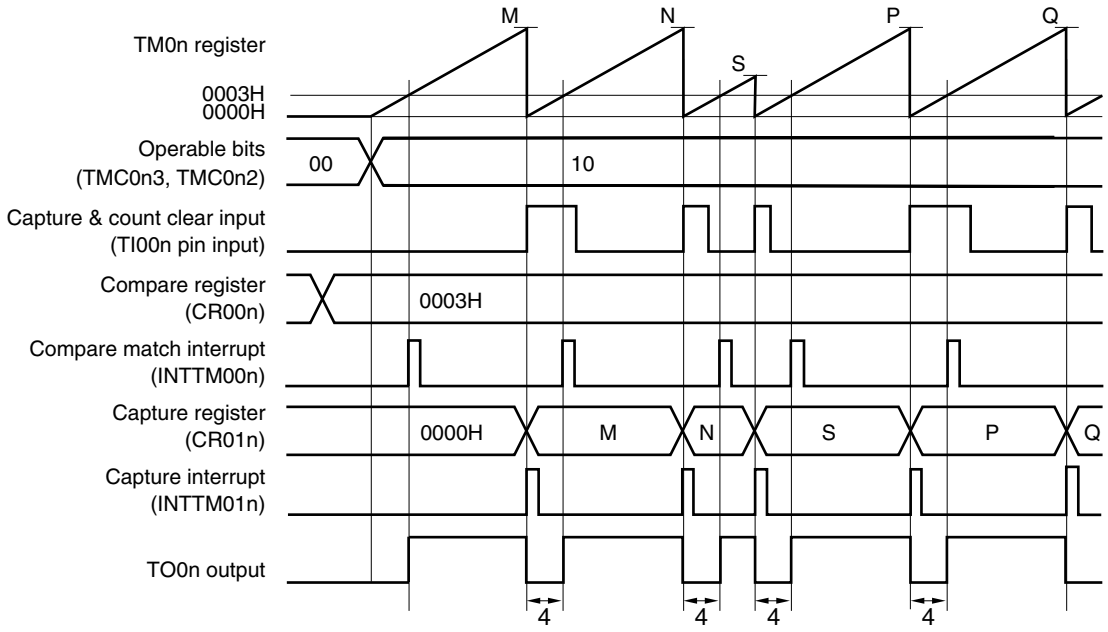

This is an application example where the width set to CR00n (4 clocks in this example) is to be output from the TO0n pin when the count value has been captured & cleared.

The count value is captured to CR01n, a capture interrupt signal (INTTM01n) is generated, TM0n is cleared (to 0000H), and the TO0n output level is inverted when the valid edge of the TI00n pin is detected. When the count value of TM0n is 0003H (four clocks have been counted), a compare match interrupt signal (INTTM00n) is generated and the TO0n output level is inverted.

Remark n = 0: 78K0/KE2 products whose flash memory is less than 32 KB, and 78K0/KB2, 78K0/KC2, 78K0/KD2 products

n = 0, 1: 78K0/KE2 products whose flash memory is at least 48 KB, and 78K0/KF2 products

(3) Operation in clear & start mode by entered TI00n pin valid edge input (CR00n: capture register, CR01n: compare register)

Figure 7-31. Block Diagram of Clear & Start Mode Entered by TI00n Pin Valid Edge Input (CR00n: Capture Register, CR01n: Compare Register)

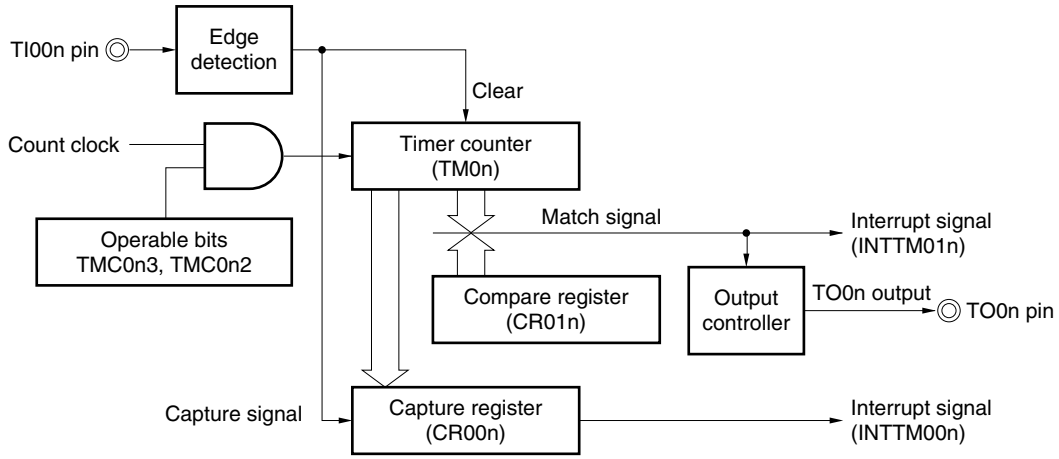

Remark n = 0: 78K0/KE2 products whose flash memory is less than 32 KB, and 78K0/KB2, 78K0/KC2, 78K0/KD2 products

n = 0, 1: 78K0/KE2 products whose flash memory is at least 48 KB, and 78K0/KF2 products

Figure 7-32. Timing Example of Clear & Start Mode Entered by TI00n Pin Valid Edge Input (CR00n: Capture Register, CR01n: Compare Register) (1/2)

(a) TOC0n = 13H, PRM0n = 10H, CRC0n, = 03H, TMC0n = 08H, CR01n = 0001H

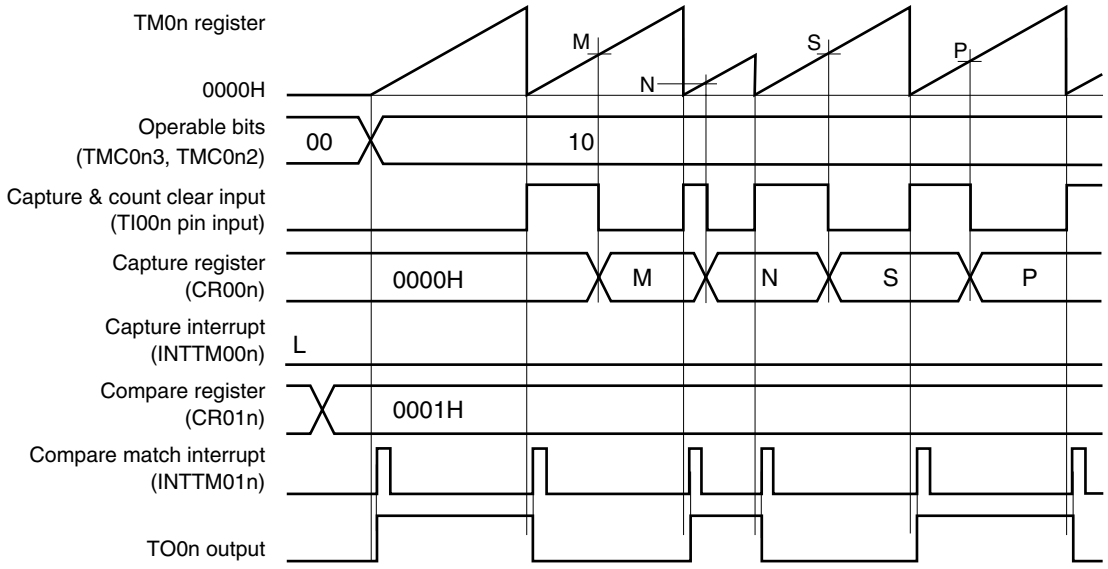

This is an application example where the TO0n output level is to be inverted when the count value has been captured & cleared.

TM0n is cleared at the rising edge detection of the TI00n pin and it is captured to CR00n at the falling edge detection of the TI00n pin.

When bit 1 (CRC0n1) of capture/compare control register 0n (CRC0n) is set to 1, the count value of TM0n is captured to CR00n in the phase reverse to that of the signal input to the TI00n pin, but the capture interrupt signal (INTTM00n) is not generated. However, the INTTM00n signal is generated when the valid edge of the TI01n pin is detected. Mask the INTTM00n signal when it is not used.

Remark n = 0: 78K0/KE2 products whose flash memory is less than 32 KB, and 78K0/KB2, 78K0/KC2, 78K0/KD2 products

n = 0, 1: 78K0/KE2 products whose flash memory is at least 48 KB, and 78K0/KF2 products

Figure 7-32. Timing Example of Clear & Start Mode Entered by TI00n Pin Valid Edge Input (CR00n: Capture Register, CR01n: Compare Register) (2/2)

(b) TOC0n = 13H, PRM0n = 10H, CRC0n, = 03H, TMC0n = 0AH, CR01n = 0003H

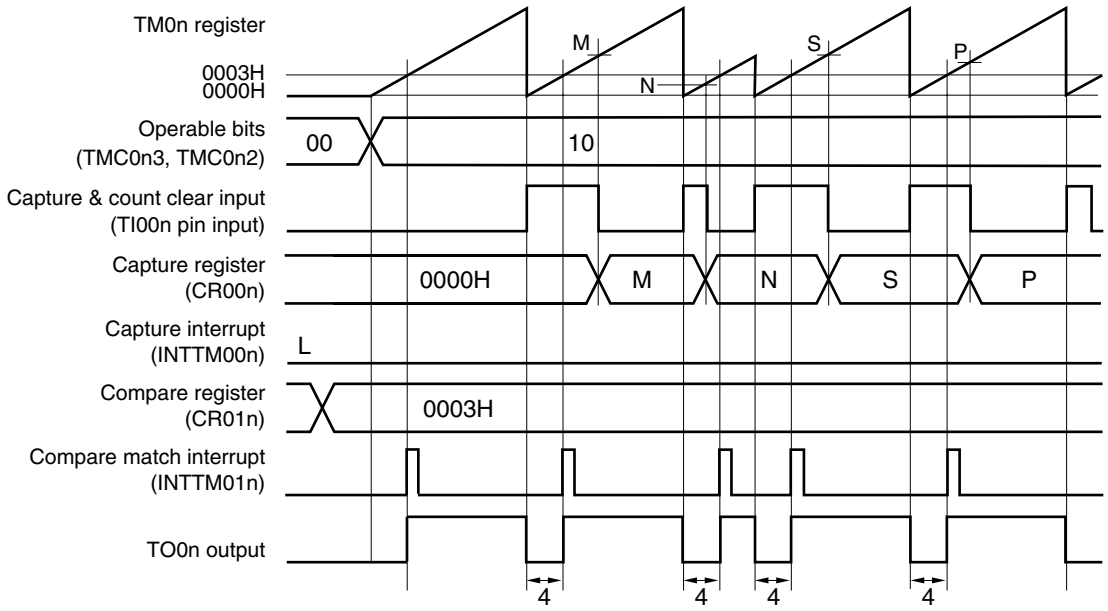

This is an application example where the width set to CR01n (4 clocks in this example) is to be output from the TO0n pin when the count value has been captured & cleared.

TM0n is cleared (to 0000H) at the rising edge detection of the TI00n pin and captured to CR00n at the falling edge detection of the TI00n pin. The TO0n output level is inverted when TM0n is cleared (to 0000H) because the rising edge of the TI00n pin has been detected or when the value of TM0n matches that of a compare register (CR01n).

When bit 1 (CRC0n1) of capture/compare control register 0n (CRC0n) is 1, the count value of TM0n is captured to CR00n in the phase reverse to that of the input signal of the TI00n pin, but the capture interrupt signal (INTTM00n) is not generated. However, the INTTM00n interrupt is generated when the valid edge of the TI01n pin is detected. Mask the INTTM00n signal when it is not used.

Remark n = 0: 78K0/KE2 products whose flash memory is less than 32 KB, and 78K0/KB2, 78K0/KC2, 78K0/KD2 products

n = 0, 1: 78K0/KE2 products whose flash memory is at least 48 KB, and 78K0/KF2 products

(4) Operation in clear & start mode entered by TI00n pin valid edge input (CR00n: capture register, CR01n: capture register)

Figure 7-33. Block Diagram of Clear & Start Mode Entered by TI00n Pin Valid Edge Input (CR00n: Capture Register, CR01n: Capture Register)

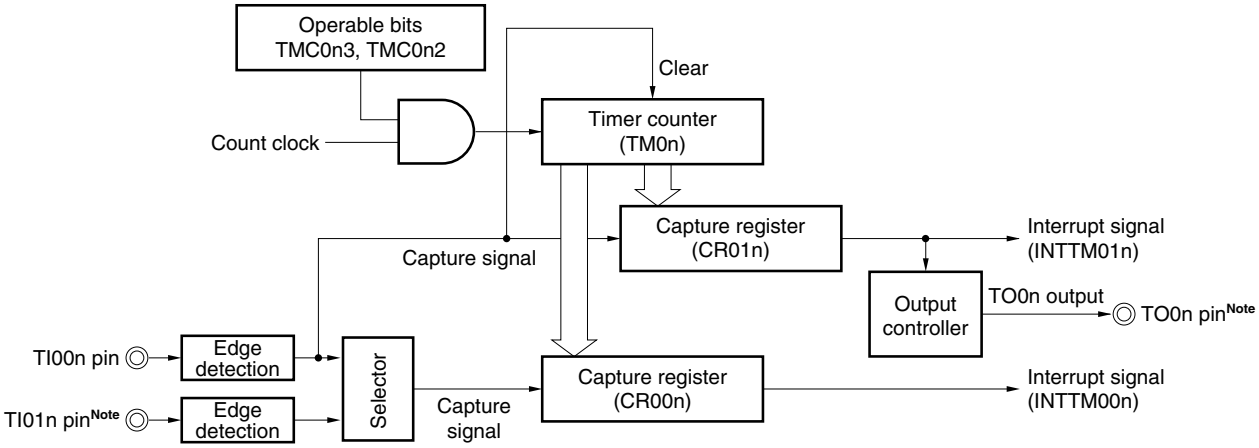

Note The timer output (TO0n) cannot be used when detecting the valid edge of the TI01n pin is used.

Figure 7-34. Timing Example of Clear & Start Mode Entered by TI00n Pin Valid Edge Input (CR00n: Capture Register, CR01n: Capture Register) (1/3)

(a) TOC0n = 13H, PRM0n = 30H, CRC0n = 05H, TMC0n = 0AH

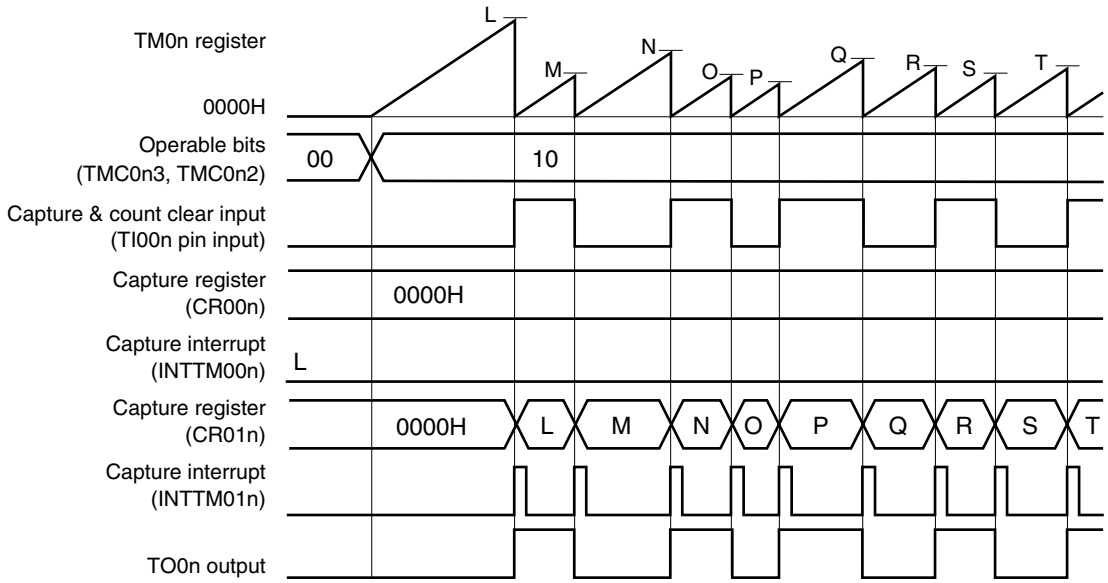

This is an application example where the count value is captured to CR01n, TM0n is cleared, and the TO0n output is inverted when the rising or falling edge of the TI00n pin is detected.

When the edge of the TI01n pin is detected, an interrupt signal (INTTM00n) is generated. Mask the INTTM00n signal when it is not used.

Remark n = 0: 78K0/KE2 products whose flash memory is less than 32 KB, and 78K0/KB2, 78K0/KC2, 78K0/KD2 products

n = 0, 1: 78K0/KE2 products whose flash memory is at least 48 KB, and 78K0/KF2 products

Figure 7-34. Timing Example of Clear & Start Mode Entered by TI00n Pin Valid Edge Input (CR00n: Capture Register, CR01n: Capture Register) (2/3)

(b) TOC0n = 13H, PRM0n = C0H, CRC0n = 05H, TMC0n = 0AH

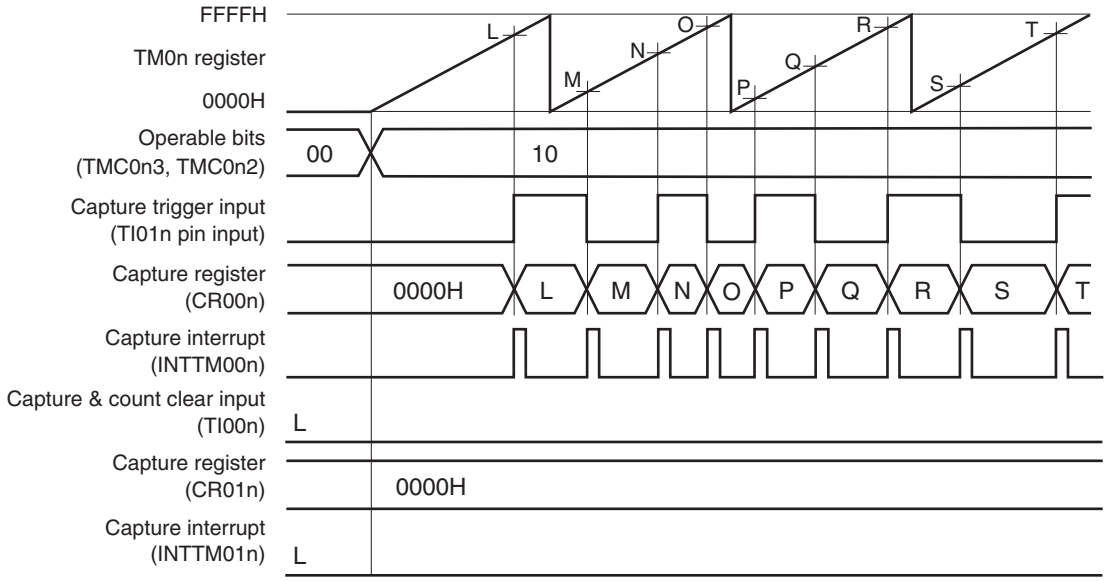

This is a timing example where an edge is not input to the TI00n pin, in an application where the count value is captured to CR00n when the rising or falling edge of the TI01n pin is detected.

Remark n = 0: 78K0/KE2 products whose flash memory is less than 32 KB, and 78K0/KB2, 78K0/KC2, 78K0/KD2 products

n = 0, 1: 78K0/KE2 products whose flash memory is at least 48 KB, and 78K0/KF2 products

Figure 7-34. Timing Example of Clear & Start Mode Entered by TI00n Pin Valid Edge Input (CR00n: Capture Register, CR01n: Capture Register) (3/3)

(c) TOC0n = 13H, PRM0n = 00H, CRC0n = 07H, TMC0n = 0AH

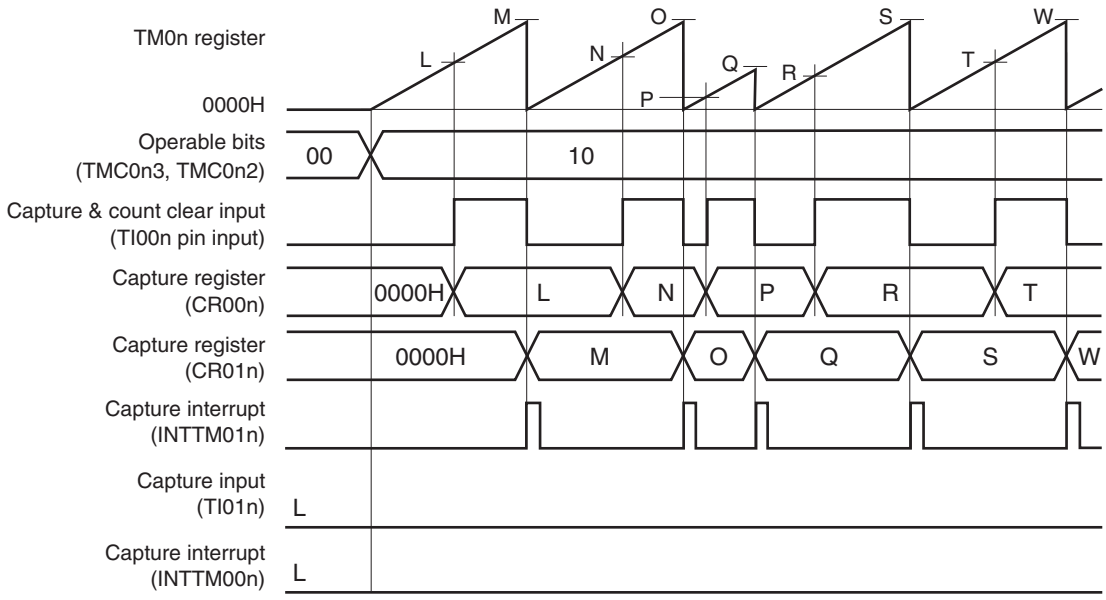

This is an application example where the pulse width of the signal input to the TI00n pin is measured.
By setting CRC0n, the count value can be captured to CR00n in the phase reverse to the falling edge of the TI00n pin (i.e., rising edge) and to CR01n at the falling edge of the TI00n pin.
The high- and low-level widths of the input pulse can be calculated by the following expressions.

- High-level width = [CR01n value] – [CR00n value] × [Count clock cycle]
- Low-level width = [CR00n value] × [Count clock cycle]

If the reverse phase of the TI00n pin is selected as a trigger to capture the count value to CR00n, the INTTM00n signal is not generated. Read the values of CR00n and CR01n to measure the pulse width immediately after the INTTM01n signal is generated.
However, if the valid edge specified by bits 6 and 5 (ES1n1 and ES1n0) of prescaler mode register 0n (PRM0n) is input to the TI01n pin, the count value is not captured but the INTTM00n signal is generated. To measure the pulse width of the TI00n pin, mask the INTTM00n signal when it is not used.

Remark n = 0: 78K0/KE2 products whose flash memory is less than 32 KB, and 78K0/KB2, 78K0/KC2, 78K0/KD2 products
n = 0, 1: 78K0/KE2 products whose flash memory is at least 48 KB, and 78K0/KF2 products

Figure 7-35. Example of Register Settings in Clear & Start Mode Entered by TI00n Pin Valid Edge Input (1/2)

(a) 16-bit timer mode control register 0n (TMC0n)

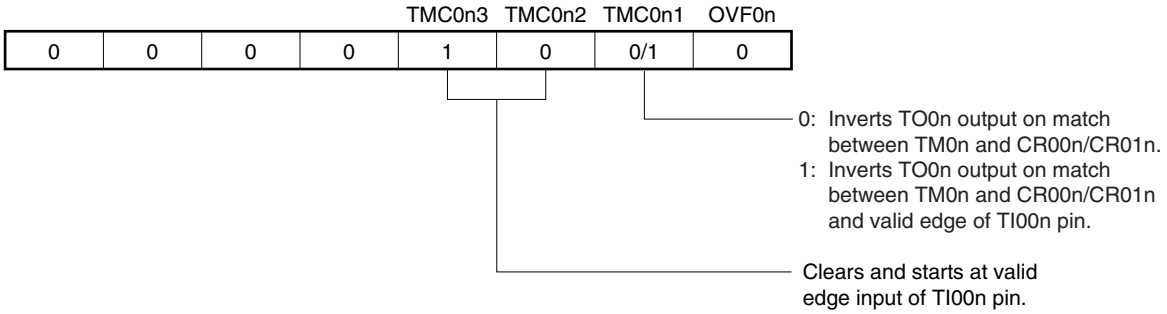

(b) Capture/compare control register 0n (CRC0n)

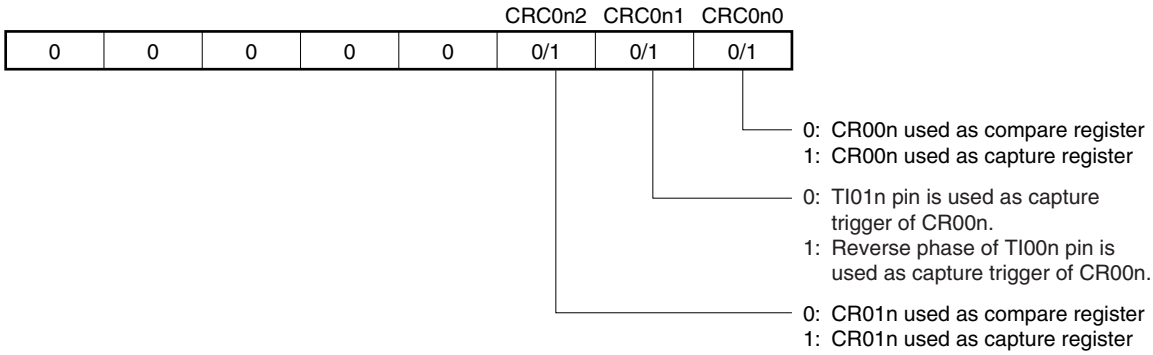

(c) 16-bit timer output control register 0n (TOC0n)

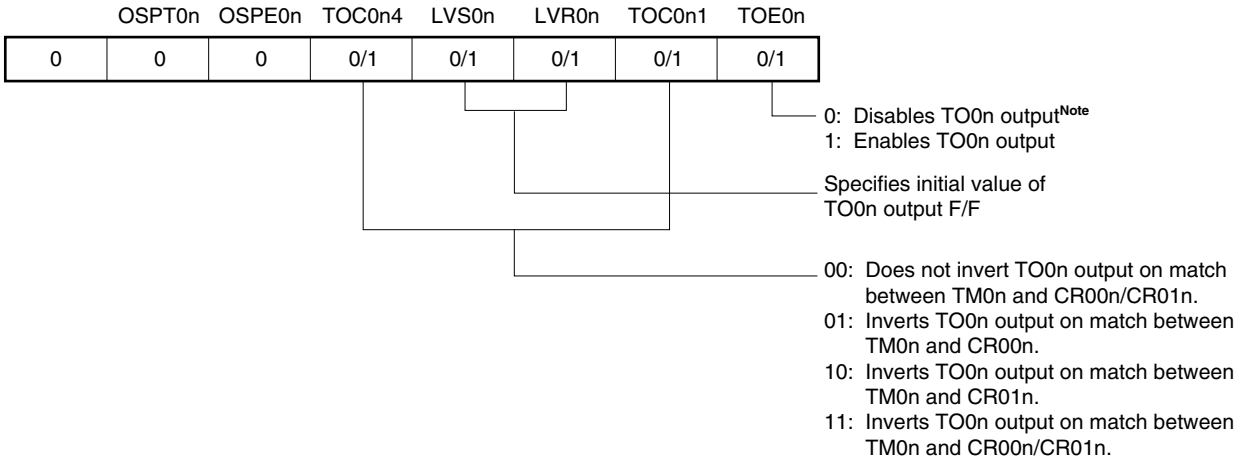

Note The timer output (TO0n) cannot be used when detecting the valid edge of the TI01n pin is used.

Remark n = 0: 78K0/KE2 products whose flash memory is less than 32 KB, and 78K0/KB2, 78K0/KC2, 78K0/KD2 products

n = 0, 1: 78K0/KE2 products whose flash memory is at least 48 KB, and 78K0/KF2 products

Figure 7-35. Example of Register Settings in Clear & Start Mode Entered by TI00n Pin Valid Edge Input (2/2)

(d) Prescaler mode register 0n (PRM0n)

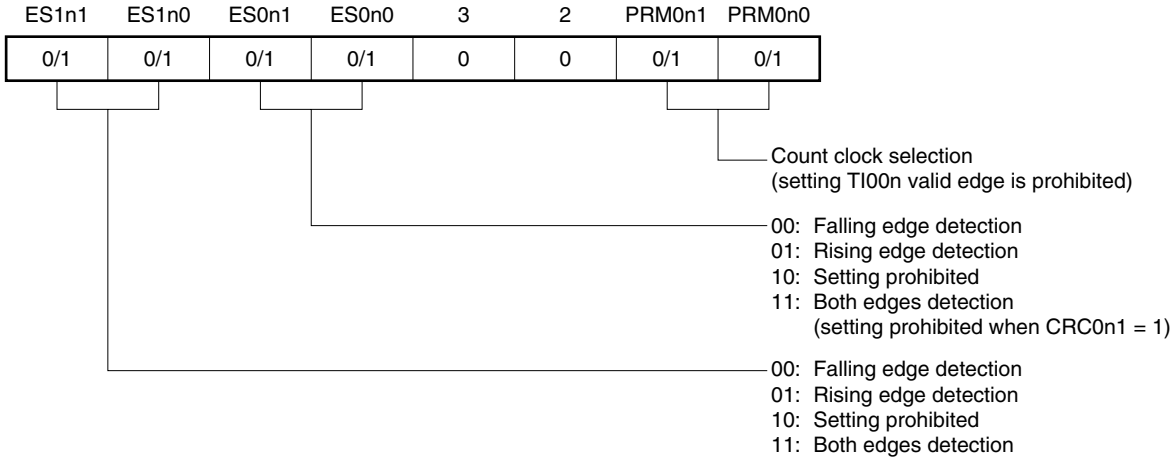

(e) 16-bit timer counter 0n (TM0n)

By reading TM0n, the count value can be read.

(f) 16-bit capture/compare register 00n (CR00n)

When this register is used as a compare register and when its value matches the count value of TM0n, an interrupt signal (INTTM00n) is generated. The count value of TM0n is not cleared.

To use this register as a capture register, select either the TI00n or TI01n pin[Note] input as a capture trigger. When the valid edge of the capture trigger is detected, the count value of TM0n is stored in CR00n.

Note The timer output (TO0n) cannot be used when detection of the valid edge of the TI01n pin is used.

(g) 16-bit capture/compare register 01n (CR01n)

When this register is used as a compare register and when its value matches the count value of TM0n, an interrupt signal (INTTM01n) is generated. The count value of TM0n is not cleared.

When this register is used as a capture register, the TI00n pin input is used as a capture trigger. When the valid edge of the capture trigger is detected, the count value of TM0n is stored in CR01n.

Remark n = 0: 78K0/KE2 products whose flash memory is less than 32 KB, and 78K0/KB2, 78K0/KC2, 78K0/KD2 products

n = 0, 1: 78K0/KE2 products whose flash memory is at least 48 KB, and 78K0/KF2 products

Figure 7-36. Example of Software Processing in Clear & Start Mode Entered by TI00n Pin Valid Edge Input

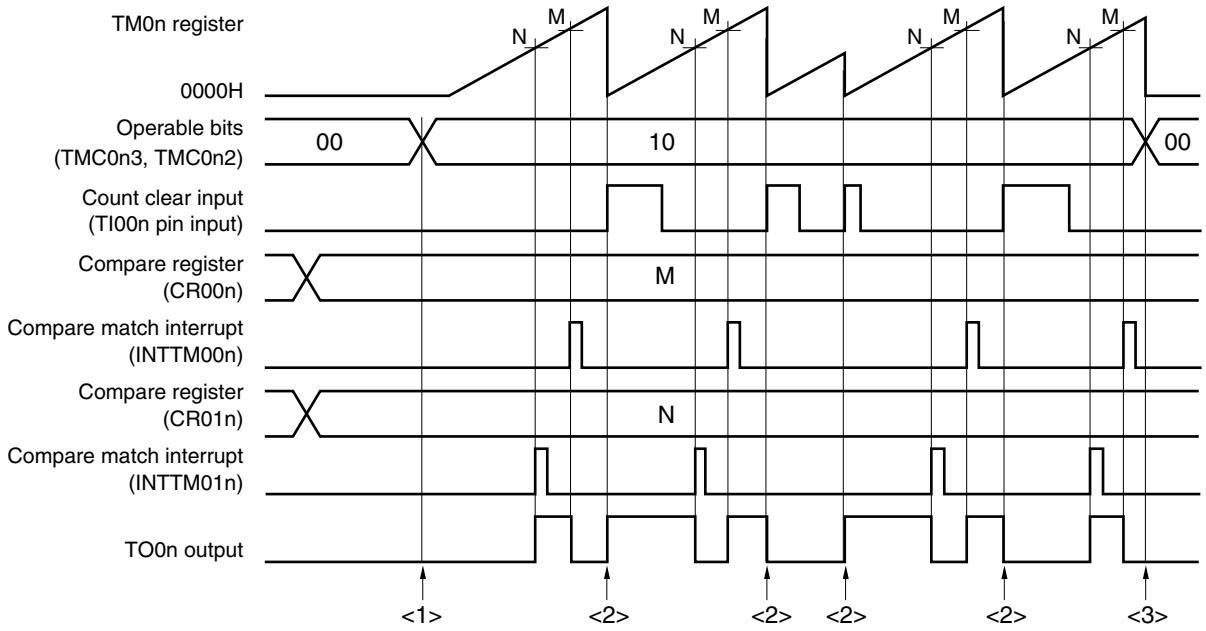

<1> Count operation start flow

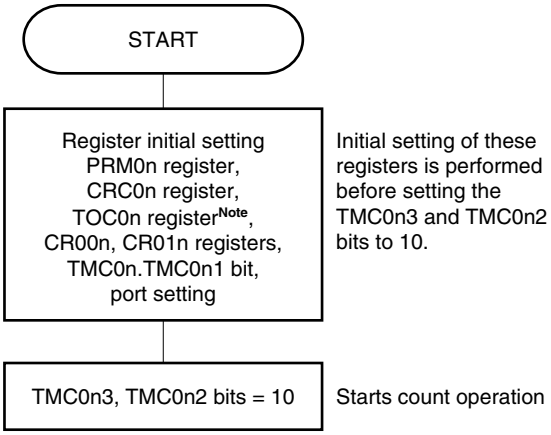

<3> Count operation stop flow

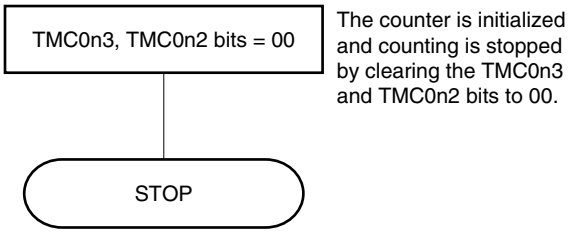

<2> TM0n register clear & start flow

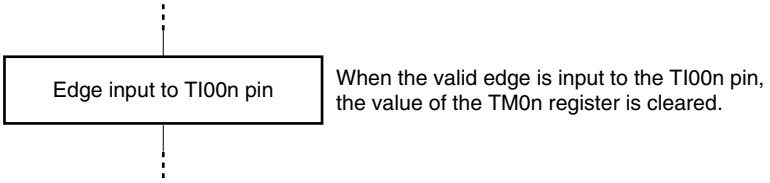

Note Care must be exercised when setting TOC0n. For details, see **7.3 (3) 16-bit timer output control register 0n (TOC0n)**.

Remark n = 0: 78K0/KE2 products whose flash memory is less than 32 KB, and 78K0/KB2, 78K0/KC2, 78K0/KD2 products

n = 0, 1: 78K0/KE2 products whose flash memory is at least 48 KB, and 78K0/KF2 products

7.4.5 Free-running timer operation

When bits 3 and 2 (TMC0n3 and TMC0n2) of 16-bit timer mode control register 0n (TMC0n) are set to 01 (free-running timer mode), 16-bit timer/event counter 0n continues counting up in synchronization with the count clock. When it has counted up to FFFFH, the overflow flag (OVF0n) is set to 1 at the next clock, and TM0n is cleared (to 0000H) and continues counting. Clear OVF0n to 0 by executing the CLR instruction via software.

The following three types of free-running timer operations are available.

- Both CR00n and CR01n are used as compare registers.
- One of CR00n or CR01n is used as a compare register and the other is used as a capture register.
- Both CR00n and CR01n are used as capture registers.

Remarks 1. For the setting of the I/O pins, see **7.3 (5) Port mode register 0 (PM0)**.

2. For how to enable the INTTM00n signal interrupt, see **CHAPTER 20 INTERRUPT FUNCTIONS**.

(1) Free-running timer mode operation

(CR00n: compare register, CR01n: compare register)

Figure 7-37. Block Diagram of Free-Running Timer Mode
(CR00n: Compare Register, CR01n: Compare Register)

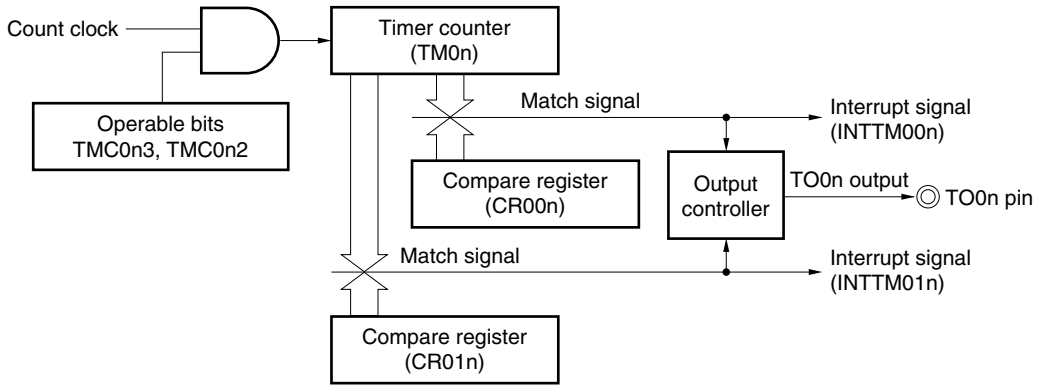

Remark n = 0: 78K0/KE2 products whose flash memory is less than 32 KB, and 78K0/KB2, 78K0/KC2, 78K0/KD2 products

n = 0, 1: 78K0/KE2 products whose flash memory is at least 48 KB, and 78K0/KF2 products

Figure 7-38. Timing Example of Free-Running Timer Mode
(CR00n: Compare Register, CR01n: Compare Register)

• TOC0n = 13H, PRM0n = 00H, CRC0n = 00H, TMC0n = 04H

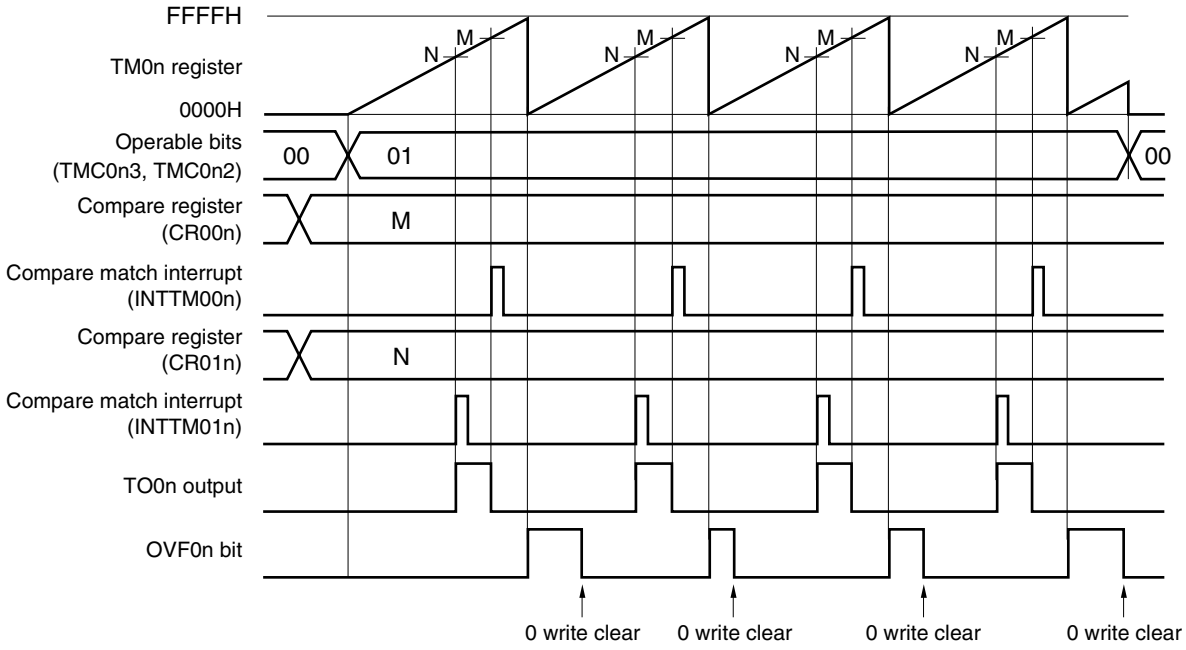

This is an application example where two compare registers are used in the free-running timer mode.
The TO0n output level is reversed each time the count value of TM0n matches the set value of CR00n or CR01n. When the count value matches the register value, the INTTM00n or INTTM01n signal is generated.

(2) Free-running timer mode operation
(CR00n: compare register, CR01n: capture register)

Figure 7-39. Block Diagram of Free-Running Timer Mode
(CR00n: Compare Register, CR01n: Capture Register)

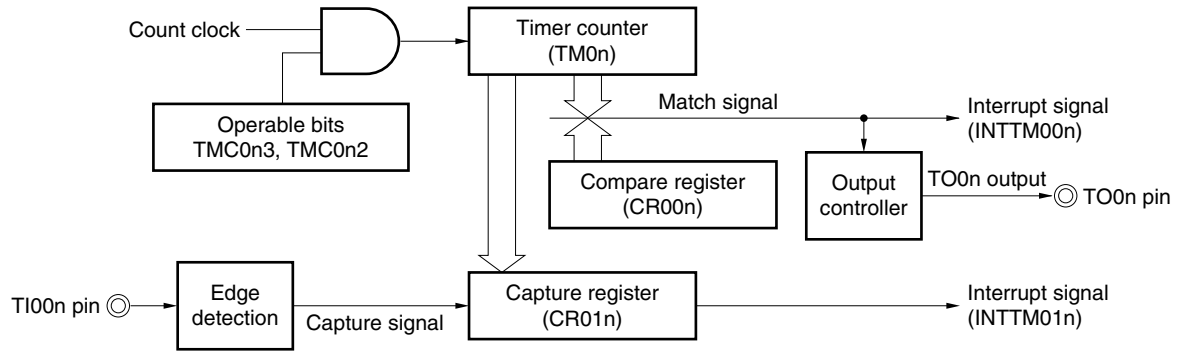

Remark n = 0: 78K0/KE2 products whose flash memory is less than 32 KB, and 78K0/KB2, 78K0/KC2, 78K0/KD2 products
n = 0, 1: 78K0/KE2 products whose flash memory is at least 48 KB, and 78K0/KF2 products

Figure 7-40. Timing Example of Free-Running Timer Mode
(CR00n: Compare Register, CR01n: Capture Register)

• TOC0n = 13H, PRM0n = 10H, CRC0n = 04H, TMC0n = 04H

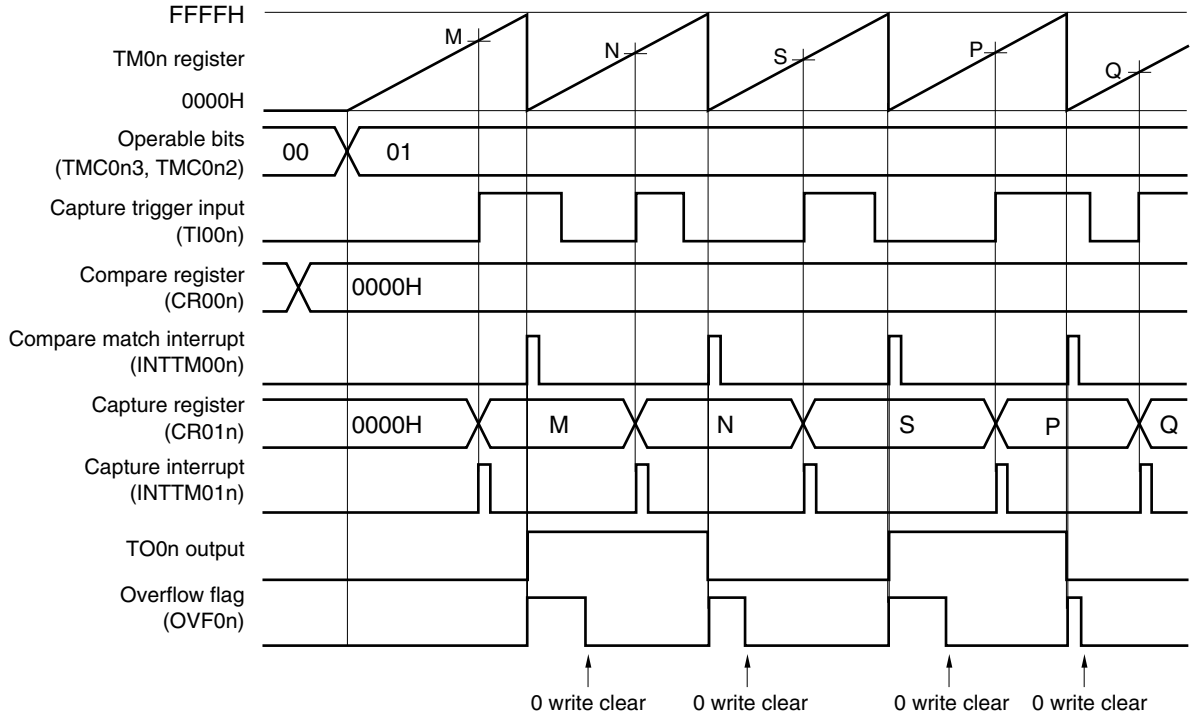

This is an application example where a compare register and a capture register are used at the same time in the free-running timer mode.

In this example, the INTTM00n signal is generated and the TO0n output level is reversed each time the count value of TM0n matches the set value of CR00n (compare register). In addition, the INTTM01n signal is generated and the count value of TM0n is captured to CR01n each time the valid edge of the TI00n pin is detected.

Remark n = 0: 78K0/KE2 products whose flash memory is less than 32 KB, and 78K0/KB2, 78K0/KC2, 78K0/KD2 products

n = 0, 1: 78K0/KE2 products whose flash memory is at least 48 KB, and 78K0/KF2 products

(3) Free-running timer mode operation

(CR00n: capture register, CR01n: capture register)

Figure 7-41. Block Diagram of Free-Running Timer Mode
(CR00n: Capture Register, CR01n: Capture Register)

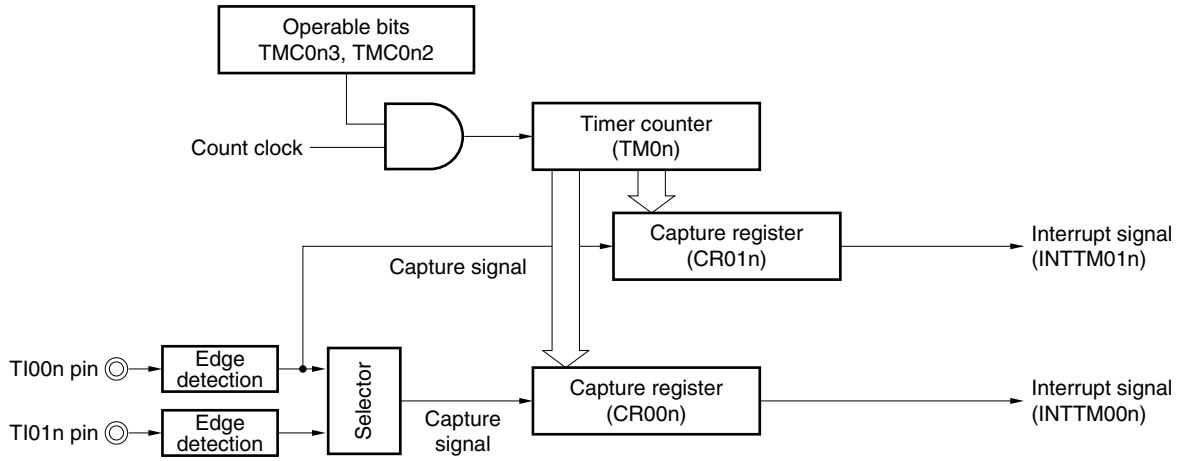

Remarks 1. If both CR00n and CR01n are used as capture registers in the free-running timer mode, the TO0n output level is not inverted.

However, it can be inverted each time the valid edge of the TI00n pin is detected if bit 1 (TMC0n1) of 16-bit timer mode control register 0n (TMC0n) is set to 1.

2. n = 0: 78K0/KE2 products whose flash memory is less than 32 KB, and 78K0/KB2, 78K0/KC2, 78K0/KD2 products

n = 0, 1: 78K0/KE2 products whose flash memory is at least 48 KB, and 78K0/KF2 products

Figure 7-42. Timing Example of Free-Running Timer Mode (CR00n: Capture Register, CR01n: Capture Register) (1/2)

(a) TOC0n = 13H, PRM0n = 50H, CRC0n = 05H, TMC0n = 04H

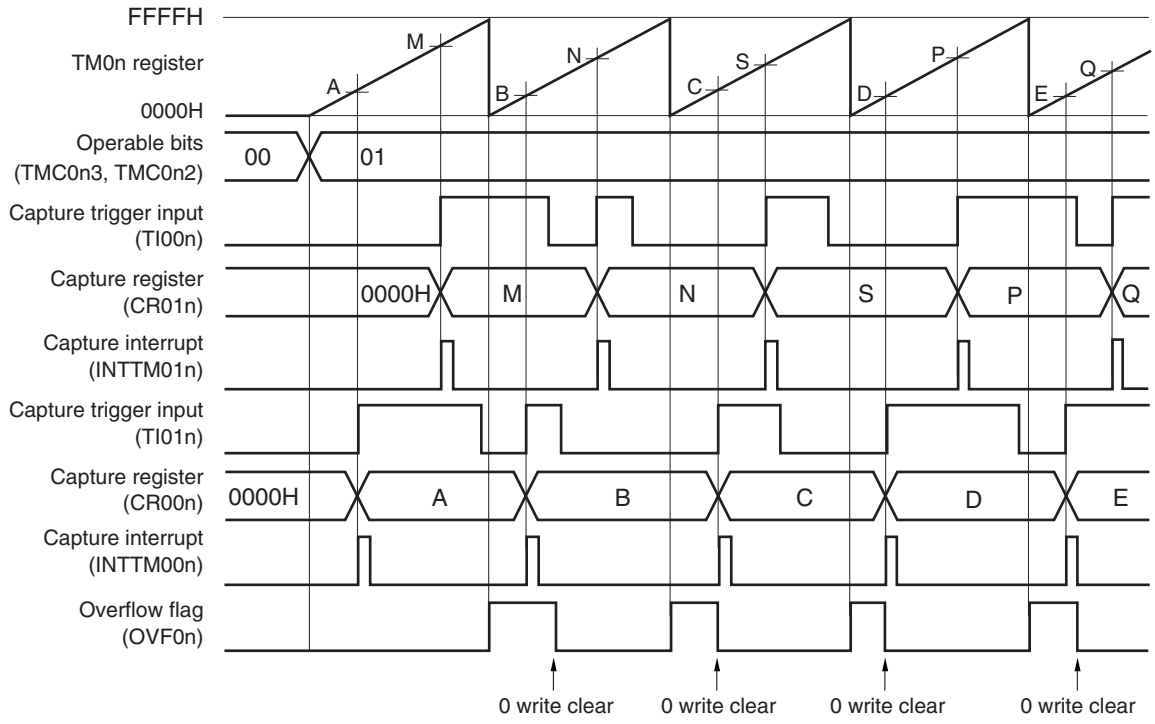

This is an application example where the count values that have been captured at the valid edges of separate capture trigger signals are stored in separate capture registers in the free-running timer mode.
The count value is captured to CR01n when the valid edge of the TI00n pin input is detected and to CR00n when the valid edge of the TI01n pin input is detected.

Remark n = 0: 78K0/KE2 products whose flash memory is less than 32 KB, and 78K0/KB2, 78K0/KC2, 78K0/KD2 products
n = 0, 1: 78K0/KE2 products whose flash memory is at least 48 KB, and 78K0/KF2 products

Figure 7-42. Timing Example of Free-Running Timer Mode (CR00n: Capture Register, CR01n: Capture Register) (2/2)

(b) TOC0n = 13H, PRM0n = C0H, CRC0n = 05H, TMC0n = 04H

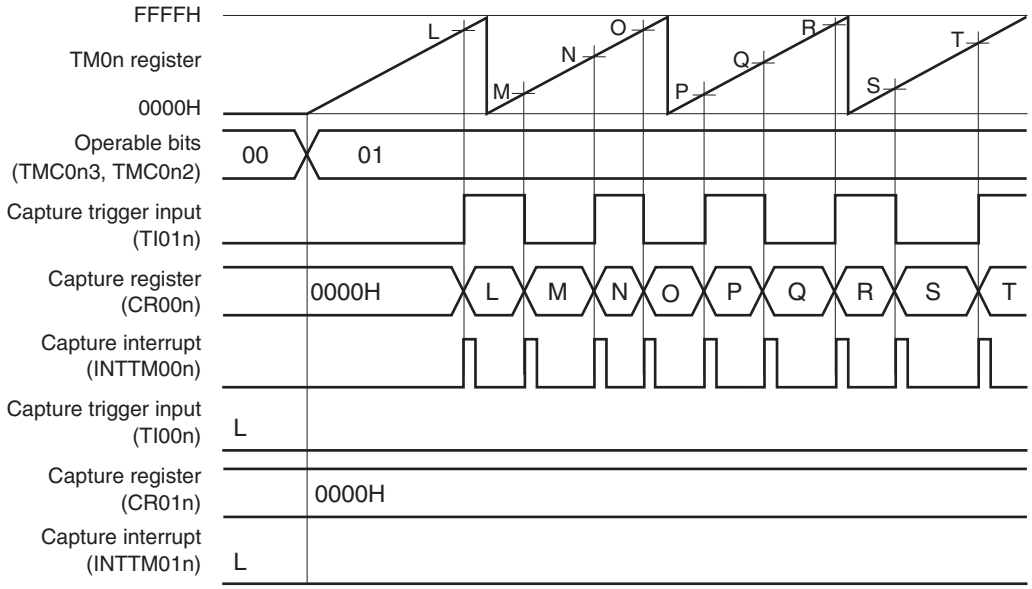

This is an application example where both the edges of the TI01n pin are detected and the count value is captured to CR00n in the free-running timer mode.

When both CR00n and CR01n are used as capture registers and when the valid edge of only the TI01n pin is to be detected, the count value cannot be captured to CR01n.

Remark n = 0: 78K0/KE2 products whose flash memory is less than 32 KB, and 78K0/KB2, 78K0/KC2, 78K0/KD2 products

n = 0, 1: 78K0/KE2 products whose flash memory is at least 48 KB, and 78K0/KF2 products

Figure 7-43. Example of Register Settings in Free-Running Timer Mode (1/2)

(a) 16-bit timer mode control register 0n (TMC0n)

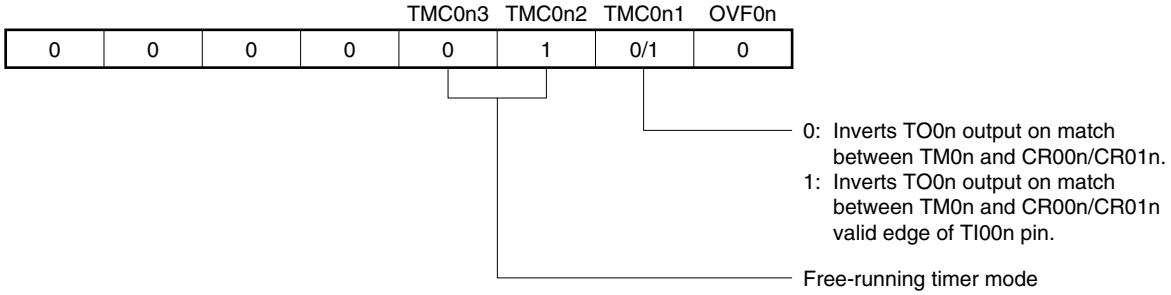

(b) Capture/compare control register 0n (CRC0n)

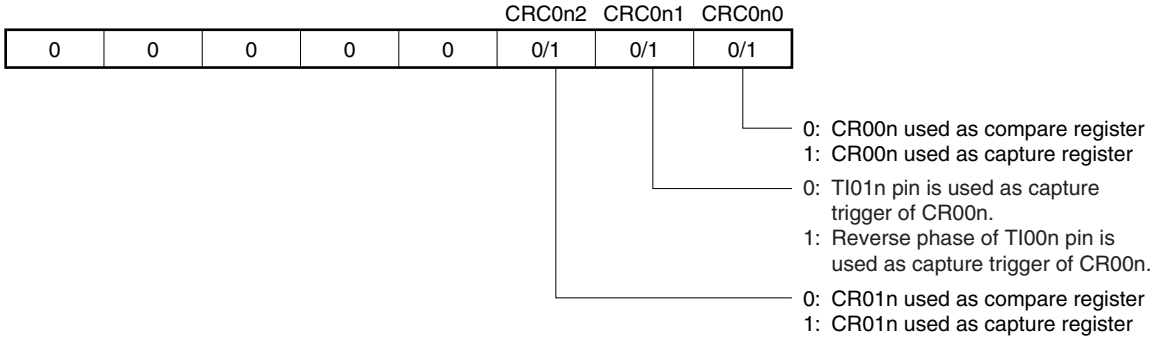

(c) 16-bit timer output control register 0n (TOC0n)

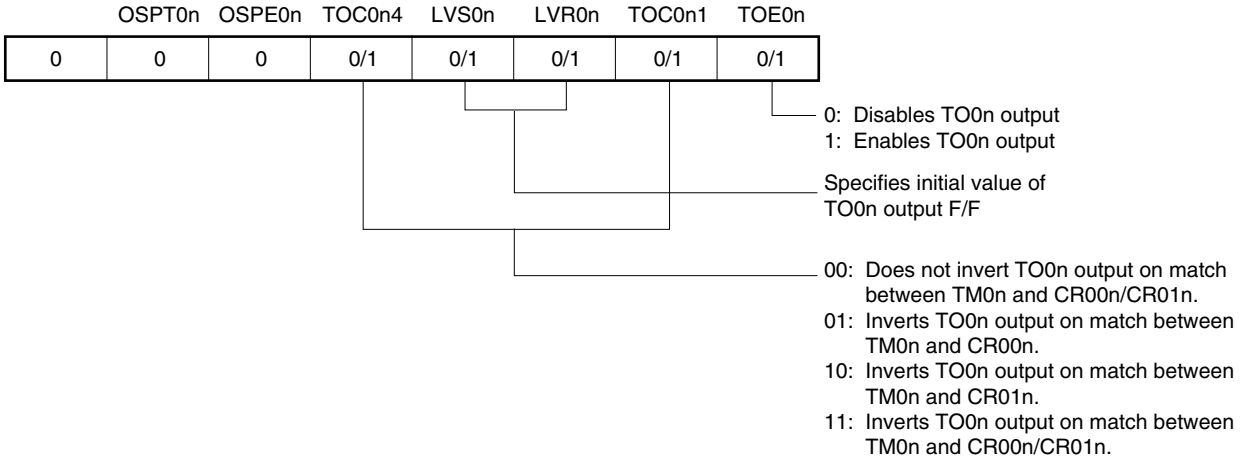

Remark n = 0: 78K0/KE2 products whose flash memory is less than 32 KB, and 78K0/KB2, 78K0/KC2, 78K0/KD2 products

n = 0, 1: 78K0/KE2 products whose flash memory is at least 48 KB, and 78K0/KF2 products

Figure 7-43. Example of Register Settings in Free-Running Timer Mode (2/2)

(d) Prescaler mode register 0n (PRM0n)

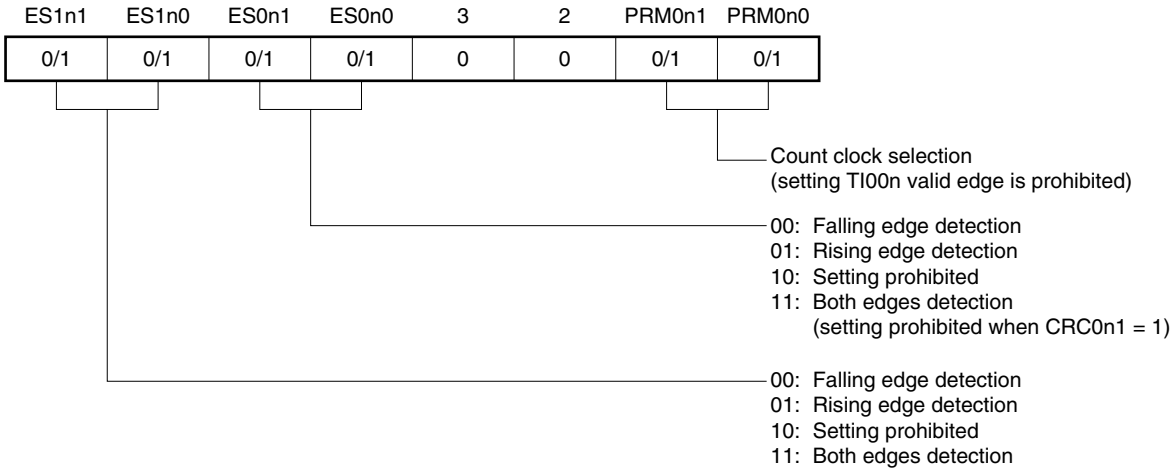

(e) 16-bit timer counter 0n (TM0n)

By reading TM0n, the count value can be read.

(f) 16-bit capture/compare register 00n (CR00n)

When this register is used as a compare register and when its value matches the count value of TM0n, an interrupt signal (INTTM00n) is generated. The count value of TM0n is not cleared.

To use this register as a capture register, select either the TI00n or TI01n pin input as a capture trigger. When the valid edge of the capture trigger is detected, the count value of TM0n is stored in CR00n.

(g) 16-bit capture/compare register 01n (CR01n)

When this register is used as a compare register and when its value matches the count value of TM0n, an interrupt signal (INTTM01n) is generated. The count value of TM0n is not cleared.

When this register is used as a capture register, the TI00n pin input is used as a capture trigger. When the valid edge of the capture trigger is detected, the count value of TM0n is stored in CR01n.

Remark n = 0: 78K0/KE2 products whose flash memory is less than 32 KB, and 78K0/KB2, 78K0/KC2, 78K0/KD2 products

n = 0, 1: 78K0/KE2 products whose flash memory is at least 48 KB, and 78K0/KF2 products

Figure 7-44. Example of Software Processing in Free-Running Timer Mode

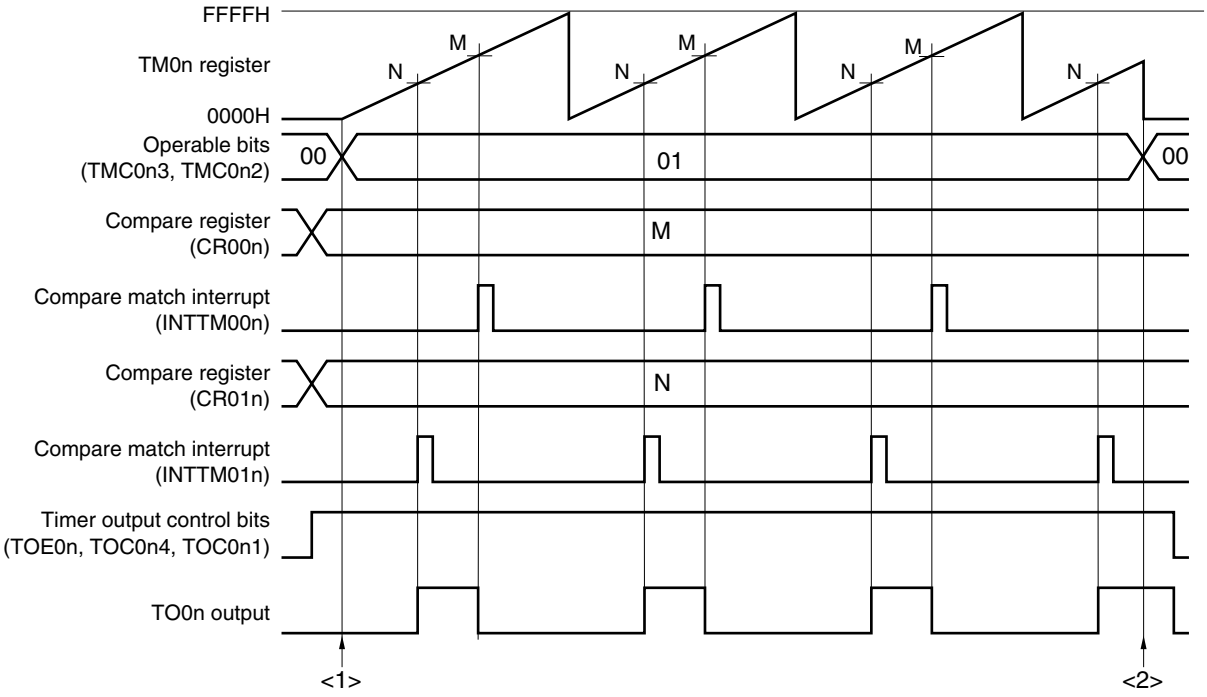

<1> Count operation start flow

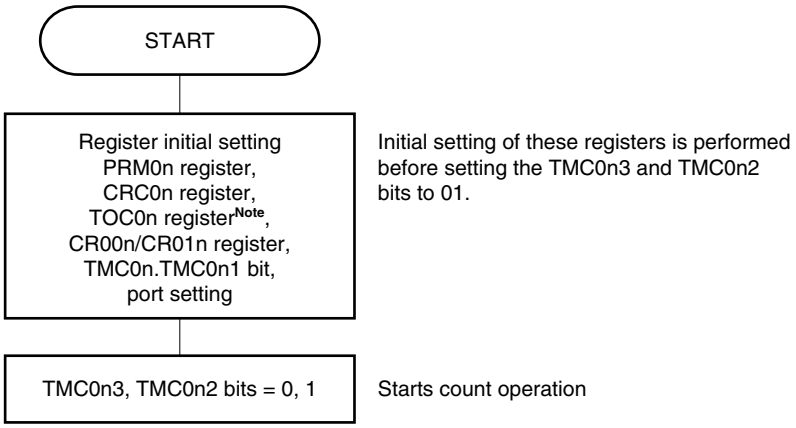

<2> Count operation stop flow

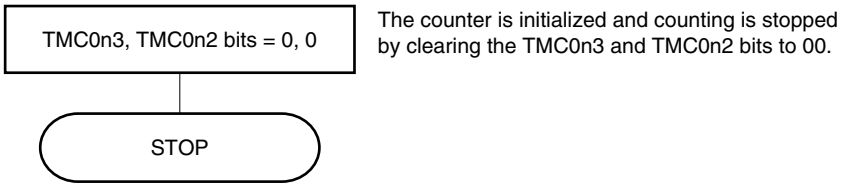

Note Care must be exercised when setting TOC0n. For details, see **7.3 (3) 16-bit timer output control register 0n (TOC0n)**.

Remark n = 0: 78K0/KE2 products whose flash memory is less than 32 KB, and 78K0/KB2, 78K0/KC2, 78K0/KD2 products

n = 0, 1: 78K0/KE2 products whose flash memory is at least 48 KB, and 78K0/KF2 products

7.4.6 PPG output operation

A square wave having a pulse width set in advance by CR01n is output from the TO0n pin as a PPG (Programmable Pulse Generator) signal during a cycle set by CR00n when bits 3 and 2 (TMC0n3 and TMC0n2) of 16-bit timer mode control register 0n (TMC0n) are set to 11 (clear & start upon a match between TM0n and CR00n).

The pulse cycle and duty factor of the pulse generated as the PPG output are as follows.

- Pulse cycle = (Set value of CR00n + 1) × Count clock cycle
- Duty = (Set value of CR01n + 1) / (Set value of CR00n + 1)

Caution To change the duty factor (value of CR01n) during operation, see 7.5.1 Rewriting CR01n during TM0n operation.

Remarks 1. For the setting of I/O pins, see **7.3 (5) Port mode register 0 (PM0)**.

2. For how to enable the INTTM00n signal interrupt, see **CHAPTER 20 INTERRUPT FUNCTIONS**.

Figure 7-45. Block Diagram of PPG Output Operation

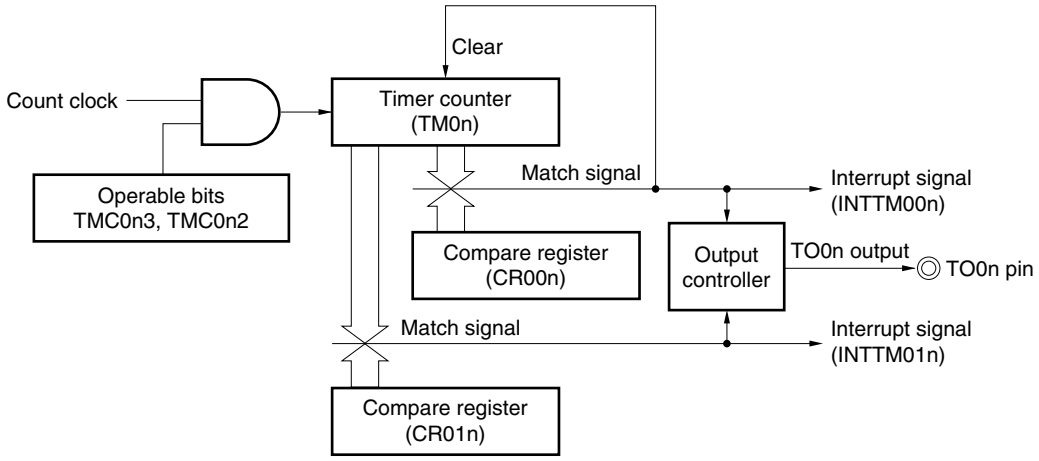

Remark n = 0: 78K0/KE2 products whose flash memory is less than 32 KB, and 78K0/KB2, 78K0/KC2, 78K0/KD2 products

n = 0, 1: 78K0/KE2 products whose flash memory is at least 48 KB, and 78K0/KF2 products

Figure 7-46. Example of Register Settings for PPG Output Operation (1/2)

(a) 16-bit timer mode control register 0n (TMC0n)

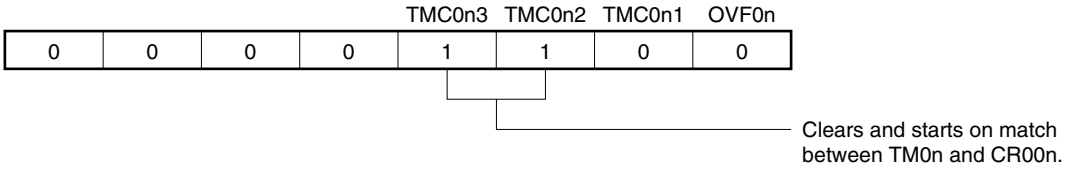

(b) Capture/compare control register 0n (CRC0n)

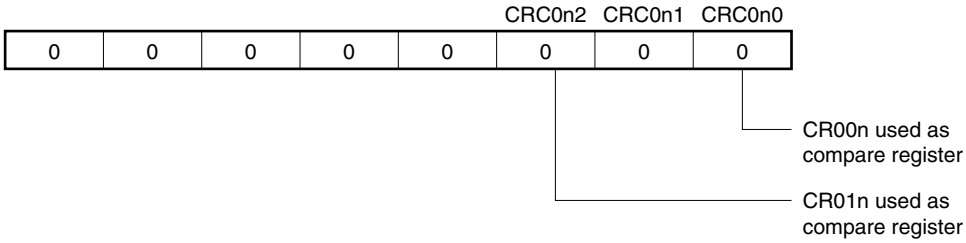

(c) 16-bit timer output control register 0n (TOC0n)

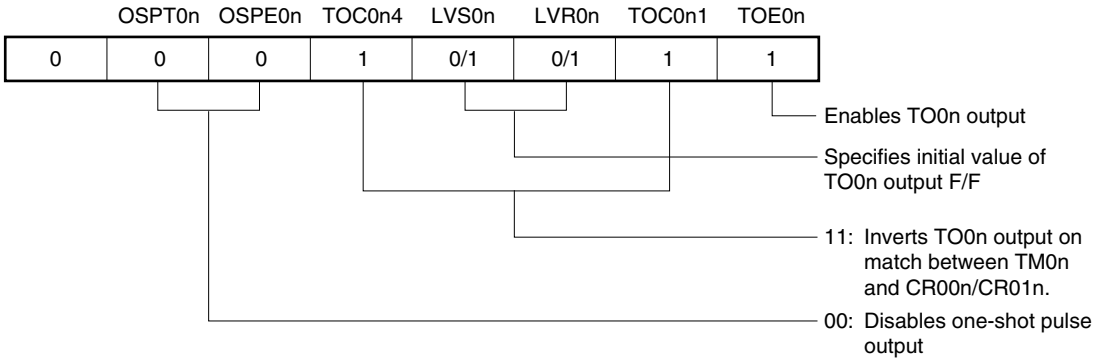

(d) Prescaler mode register 0n (PRM0n)

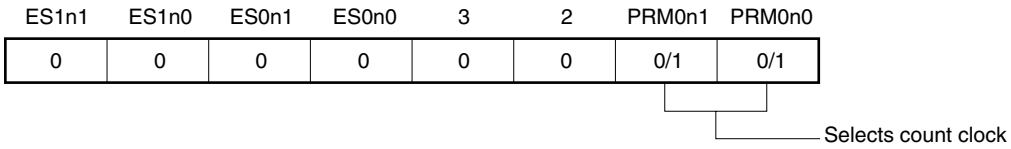

Remark n = 0: 78K0/KE2 products whose flash memory is less than 32 KB, and 78K0/KB2, 78K0/KC2, 78K0/KD2 products

n = 0, 1: 78K0/KE2 products whose flash memory is at least 48 KB, and 78K0/KF2 products

Figure 7-46. Example of Register Settings for PPG Output Operation (2/2)

(e) 16-bit timer counter 0n (TM0n)

By reading TM0n, the count value can be read.

(f) 16-bit capture/compare register 00n (CR00n)

An interrupt signal (INTTM00n) is generated when the value of this register matches the count value of TM0n. The count value of TM0n is cleared.

(g) 16-bit capture/compare register 01n (CR01n)

An interrupt signal (INTTM01n) is generated when the value of this register matches the count value of TM0n. The count value of TM0n is not cleared.

Caution Set values to CR00n and CR01n such that the condition 0000H ≤ CR01n < CR00n ≤ FFFFH is satisfied.

Remark n = 0: 78K0/KE2 products whose flash memory is less than 32 KB, and 78K0/KB2, 78K0/KC2, 78K0/KD2 products

n = 0, 1: 78K0/KE2 products whose flash memory is at least 48 KB, and 78K0/KF2 products

Figure 7-47. Example of Software Processing for PPG Output Operation

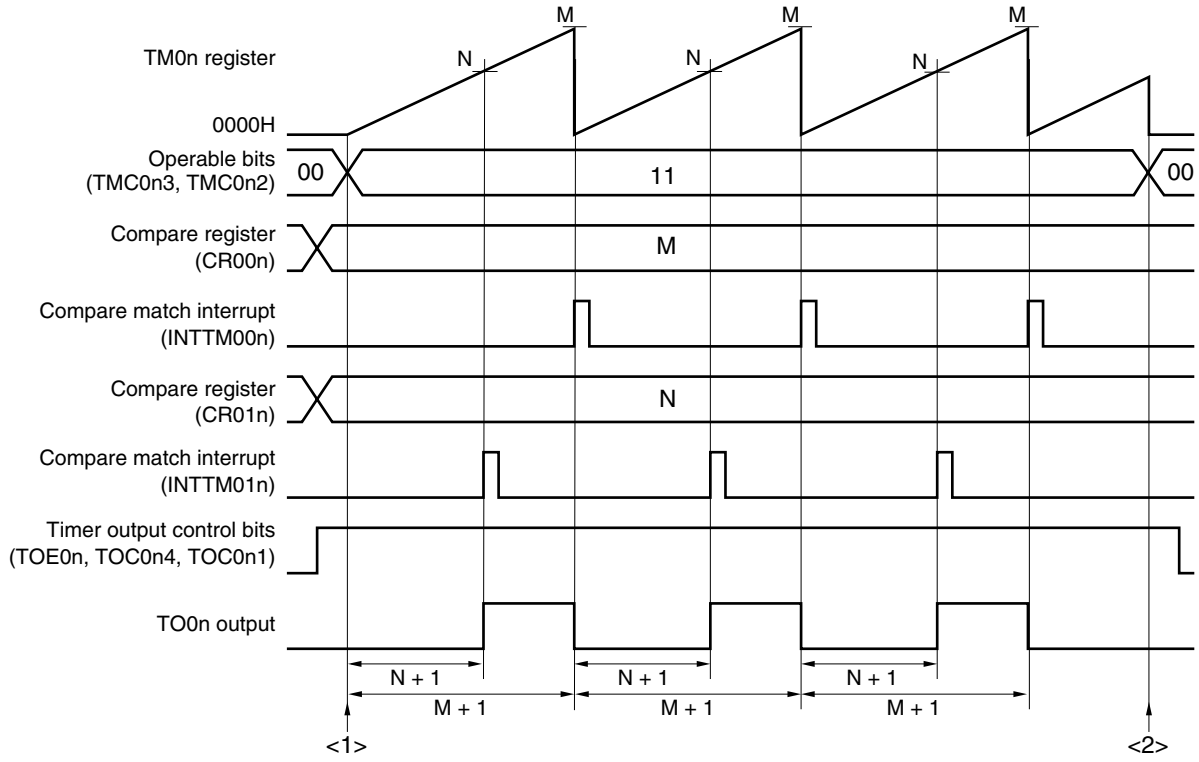

<1> Count operation start flow

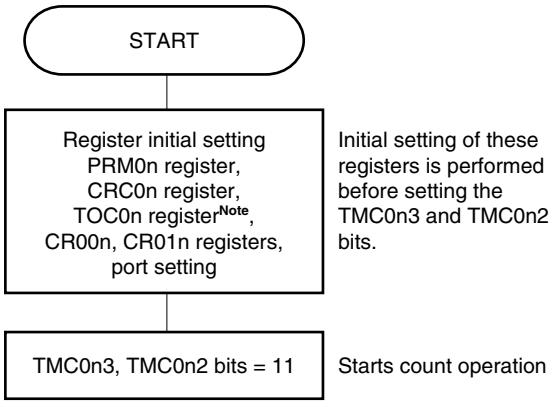

<2> Count operation stop flow

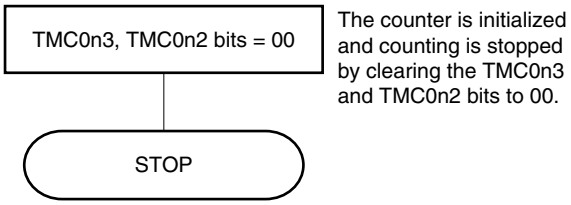

Note Care must be exercised when setting TOC0n. For details, see **7.3 (3) 16-bit timer output control register 0n (TOC0n)**.

Remarks 1. PPG pulse cycle = (M + 1) × Count clock cycle
PPG duty = (N + 1)/(M + 1)

2. n = 0: 78K0/KE2 products whose flash memory is less than 32 KB, and 78K0/KB2, 78K0/KC2, 78K0/KD2 products
n = 0, 1: 78K0/KE2 products whose flash memory is at least 48 KB, and 78K0/KF2 products

7.4.7 One-shot pulse output operation

A one-shot pulse can be output by setting bits 3 and 2 (TMC0n3 and TMC0n2) of the 16-bit timer mode control register 0n (TMC0n) to 01 (free-running timer mode) or to 10 (clear & start mode entered by the TI00n pin valid edge) and setting bit 5 (OSPE0n) of 16-bit timer output control register 0n (TOC0n) to 1.

When bit 6 (OSPT0n) of TOC0n is set to 1 or when the valid edge is input to the TI00n pin during timer operation, clearing & starting of TM0n is triggered, and a pulse of the difference between the values of CR00n and CR01n is output only once from the TO0n pin.

Cautions 1. Do not input the trigger again (setting OSPT0n to 1 or detecting the valid edge of the TI00n pin) while the one-shot pulse is output. To output the one-shot pulse again, generate the trigger after the current one-shot pulse output has completed.

2. To use only the setting of OSPT0n to 1 as the trigger of one-shot pulse output, do not change the level of the TI00n pin or its alternate function port pin. Otherwise, the pulse will be unexpectedly output.

Remarks 1. For the setting of the I/O pins, see **7.3 (5) Port mode register 0 (PM0)**.

2. For how to enable the INTTM00n signal interrupt, see **CHAPTER 20 INTERRUPT FUNCTIONS**.

Figure 7-48. Block Diagram of One-Shot Pulse Output Operation

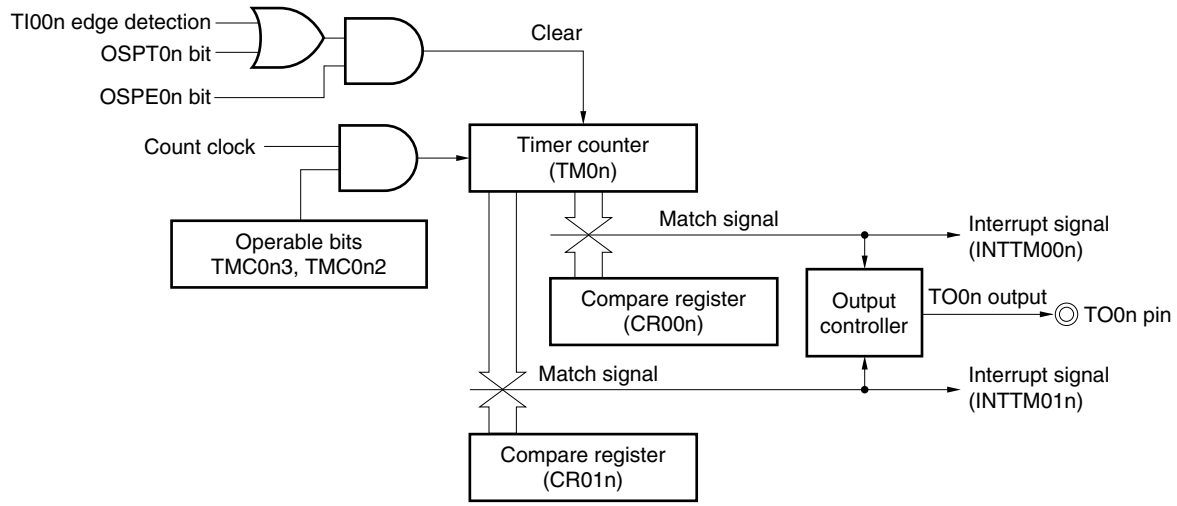

Remark n = 0: 78K0/KE2 products whose flash memory is less than 32 KB, and 78K0/KB2, 78K0/KC2, 78K0/KD2 products

n = 0, 1: 78K0/KE2 products whose flash memory is at least 48 KB, and 78K0/KF2 products

Figure 7-49. Example of Register Settings for One-Shot Pulse Output Operation (1/2)

(a) 16-bit timer mode control register 0n (TMC0n)

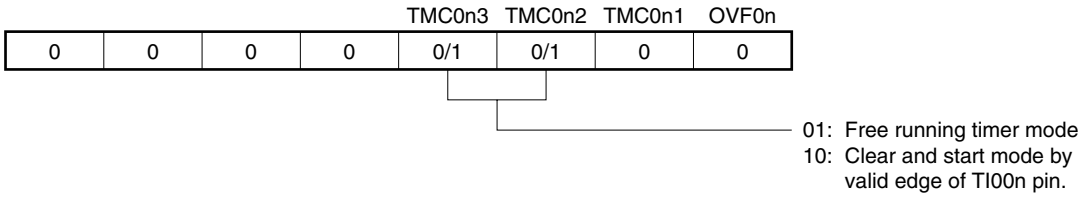

(b) Capture/compare control register 0n (CRC0n)

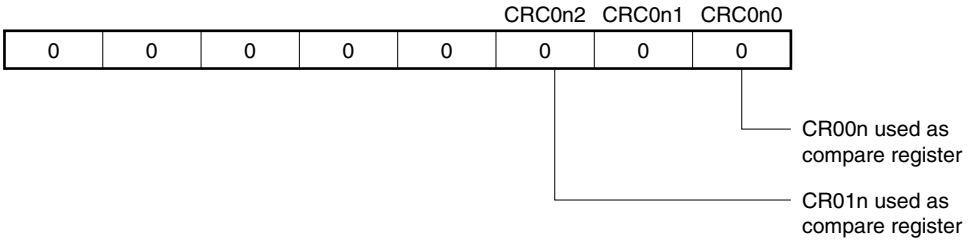

(c) 16-bit timer output control register 0n (TOC0n)

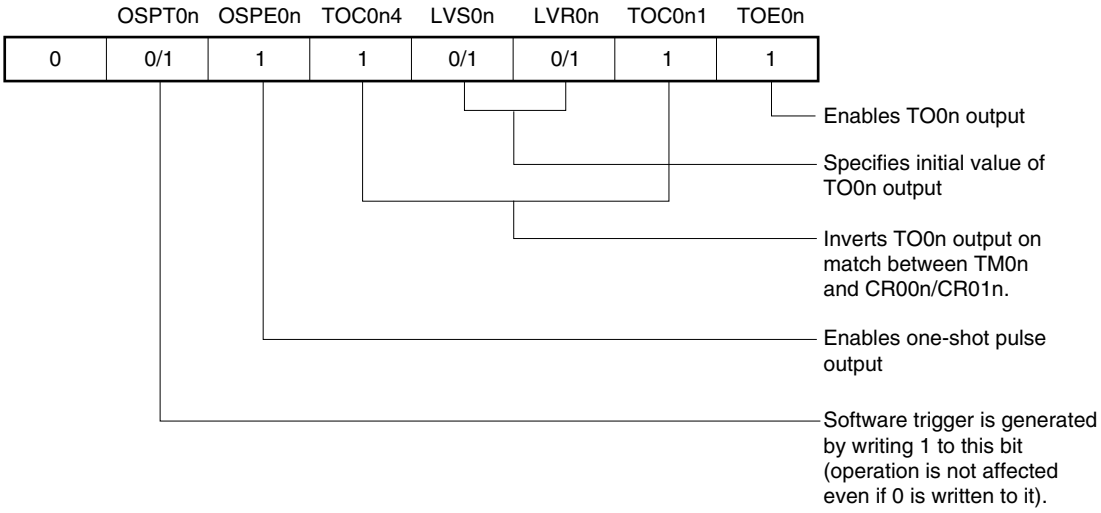

(d) Prescaler mode register 0n (PRM0n)

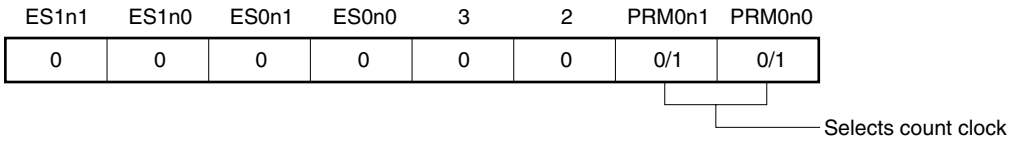

Remark n = 0: 78K0/KE2 products whose flash memory is less than 32 KB, and 78K0/KB2, 78K0/KC2, 78K0/KD2 products

n = 0, 1: 78K0/KE2 products whose flash memory is at least 48 KB, and 78K0/KF2 products

Figure 7-49. Example of Register Settings for One-Shot Pulse Output Operation (2/2)

(e) 16-bit timer counter 0n (TM0n)

By reading TM0n, the count value can be read.

(f) 16-bit capture/compare register 00n (CR00n)

This register is used as a compare register when a one-shot pulse is output. When the value of TM0n matches that of CR00n, an interrupt signal (INTTM00n) is generated and the TO0n output level is inverted.

(g) 16-bit capture/compare register 01n (CR01n)

This register is used as a compare register when a one-shot pulse is output. When the value of TM0n matches that of CR01n, an interrupt signal (INTTM01n) is generated and the TO0n output level is inverted.

Caution Do not set the same value to CR00n and CR01n.

Remark n = 0: 78K0/KE2 products whose flash memory is less than 32 KB, and 78K0/KB2, 78K0/KC2, 78K0/KD2 products

n = 0, 1: 78K0/KE2 products whose flash memory is at least 48 KB, and 78K0/KF2 products

Figure 7-50. Example of Software Processing for One-Shot Pulse Output Operation (1/2)

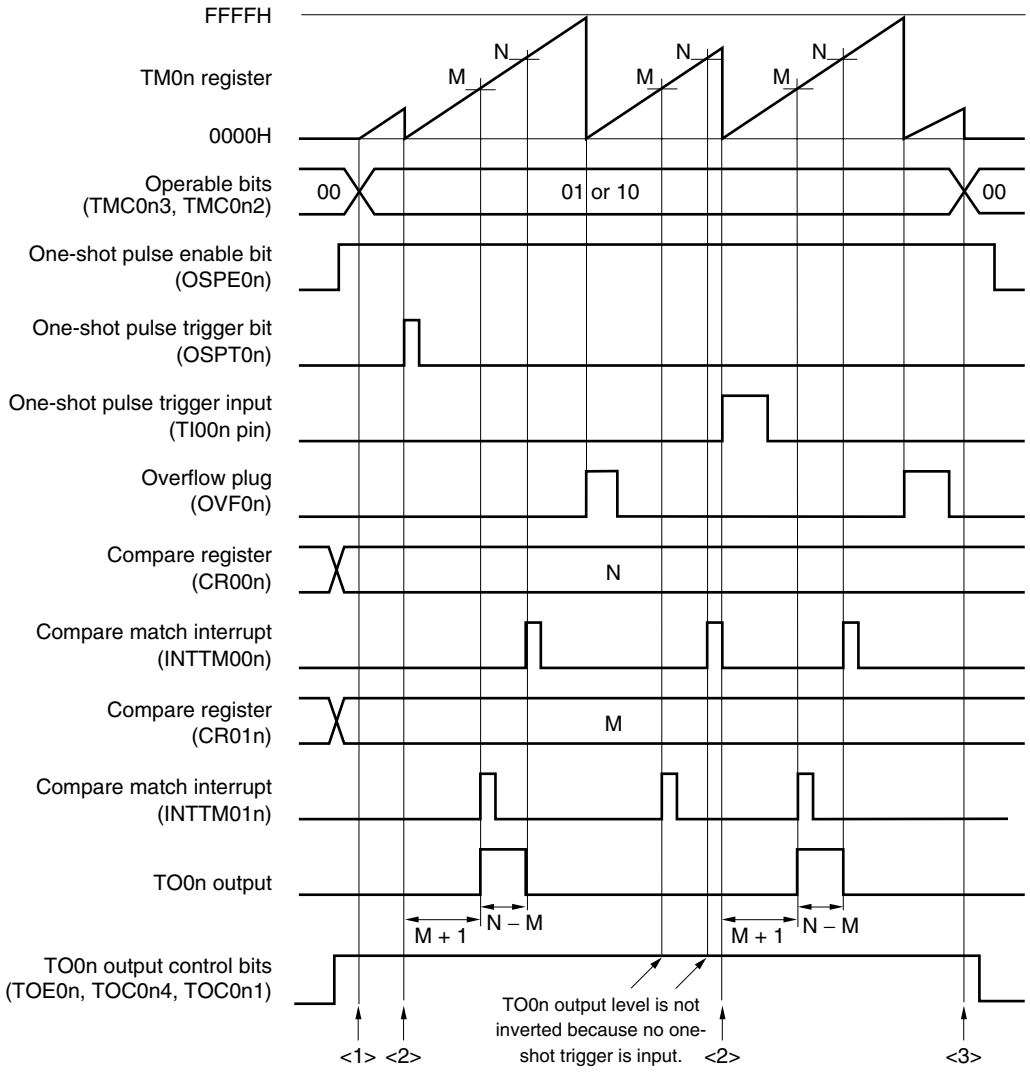

- Time from when the one-shot pulse trigger is input until the one-shot pulse is output
  = (M + 1) × Count clock cycle
- One-shot pulse output active level width
  = (N − M) × Count clock cycle

Remark n = 0: 78K0/KE2 products whose flash memory is less than 32 KB, and 78K0/KB2, 78K0/KC2,] 78K0/KD2 products

n = 0, 1: 78K0/KE2 products whose flash memory is at least 48 KB, and 78K0/KF2 products

Figure 7-50. Example of Software Processing for One-Shot Pulse Output Operation (2/2)

<1> Count operation start flow

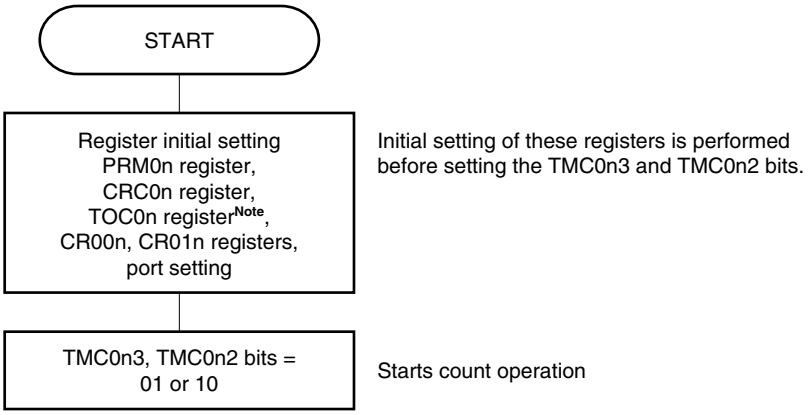

<2> One-shot trigger input flow

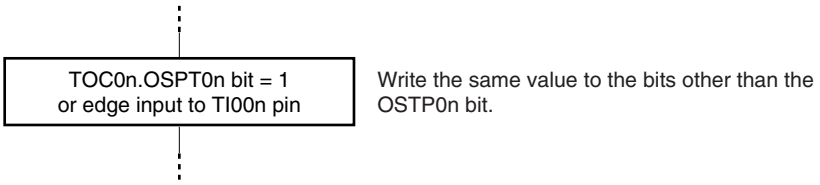

<3> Count operation stop flow

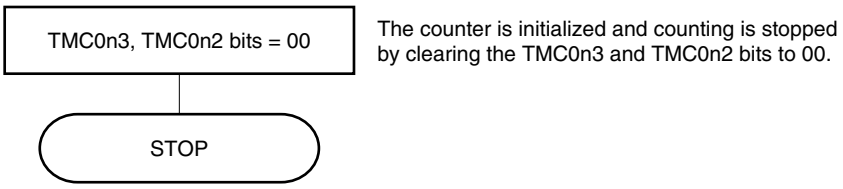

Note Care must be exercised when setting TOC0n. For details, see **7.3 (3) 16-bit timer output control register 0n (TOC0n)**.

Remark n = 0: 78K0/KE2 products whose flash memory is less than 32 KB, and 78K0/KB2, 78K0/KC2, 78K0/KD2 products

n = 0, 1: 78K0/KE2 products whose flash memory is at least 48 KB, and 78K0/KF2 products

7.4.8 Pulse width measurement operation

TM0n can be used to measure the pulse width of the signal input to the TI00n and TI01n pins.

Measurement can be accomplished by operating the 16-bit timer/event counter 0n in the free-running timer mode or by restarting the timer in synchronization with the signal input to the TI00n pin.

When an interrupt is generated, read the value of the valid capture register and measure the pulse width. Check bit 0 (OVF0n) of 16-bit timer mode control register 0n (TMC0n). If it is set (to 1), clear it to 0 by software.

Figure 7-51. Block Diagram of Pulse Width Measurement (Free-Running Timer Mode)

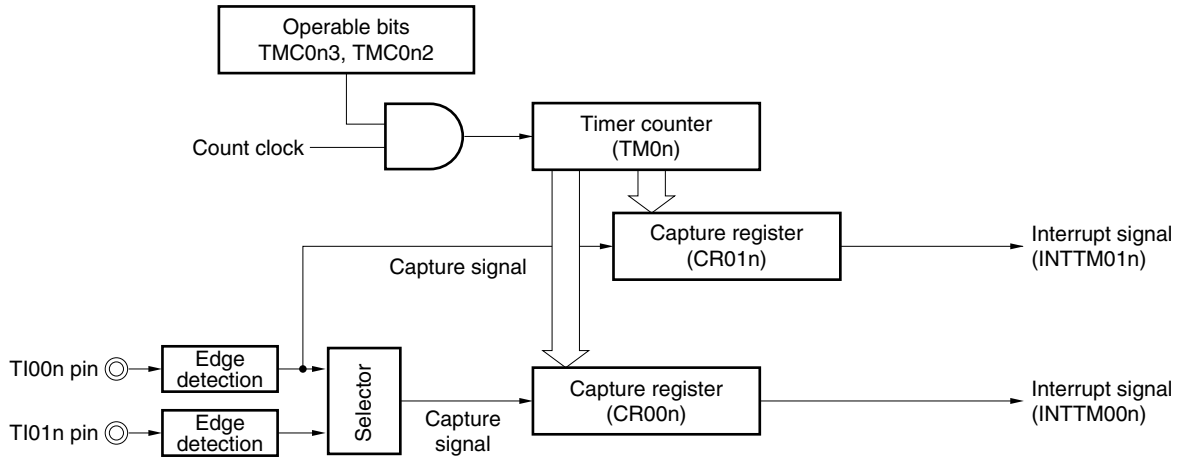

Figure 7-52. Block Diagram of Pulse Width Measurement
(Clear & Start Mode Entered by TI00n Pin Valid Edge Input)

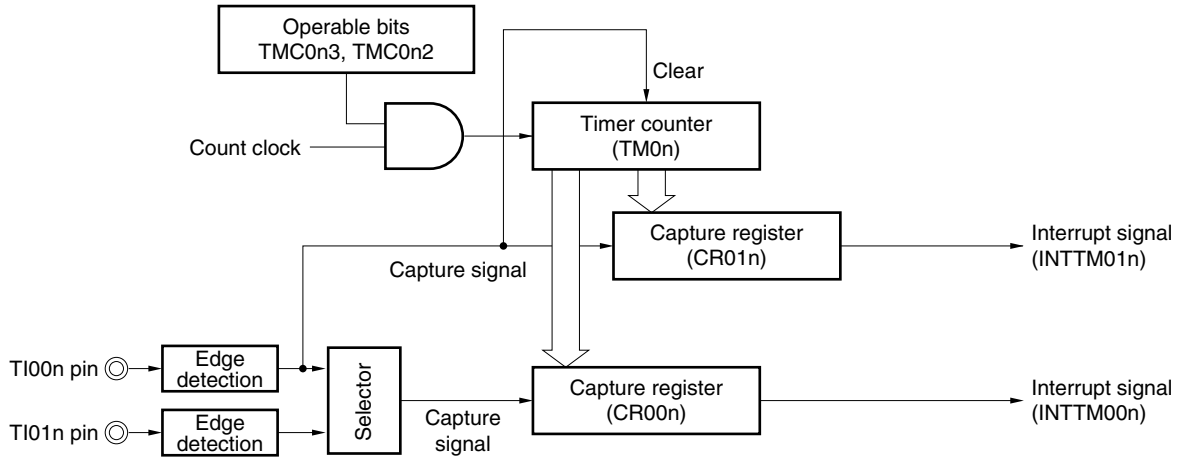

Remark n = 0: 78K0/KE2 products whose flash memory is less than 32 KB, and 78K0/KB2, 78K0/KC2, 78K0/KD2 products

n = 0, 1: 78K0/KE2 products whose flash memory is at least 48 KB, and 78K0/KF2 products

A pulse width can be measured in the following three ways.

- Measuring the pulse width by using two input signals of the TI00n and TI01n pins (free-running timer mode)
- Measuring the pulse width by using one input signal of the TI00n pin (free-running timer mode)
- Measuring the pulse width by using one input signal of the TI00n pin (clear & start mode entered by the TI00n pin valid edge input)

Remarks 1. For the setting of the I/O pins, see **7.3 (5) Port mode register 0 (PM0)**.

2. For how to enable the INTTM00n signal interrupt, see **CHAPTER 20 INTERRUPT FUNCTIONS**.

(1) Measuring the pulse width by using two input signals of the TI00n and TI01n pins (free-running timer mode)

Set the free-running timer mode (TMC0n3 and TMC0n2 = 01). When the valid edge of the TI00n pin is detected, the count value of TM0n is captured to CR01n. When the valid edge of the TI01n pin is detected, the count value of TM0n is captured to CR00n. Specify detection of both the edges of the TI00n and TI01n pins.

By this measurement method, the previous count value is subtracted from the count value captured by the edge of each input signal. Therefore, save the previously captured value to a separate register in advance.

If an overflow occurs, the value becomes negative if the previously captured value is simply subtracted from the current captured value and, therefore, a borrow occurs (bit 0 (CY) of the program status word (PSW) is set to 1). If this happens, ignore CY and take the calculated value as the pulse width. In addition, clear bit 0 (OVF0n) of 16-bit timer mode control register 0n (TMC0n) to 0.

Figure 7-53. Timing Example of Pulse Width Measurement (1)

• TMC0n = 04H, PRM0n = F0H, CRC0n = 05H

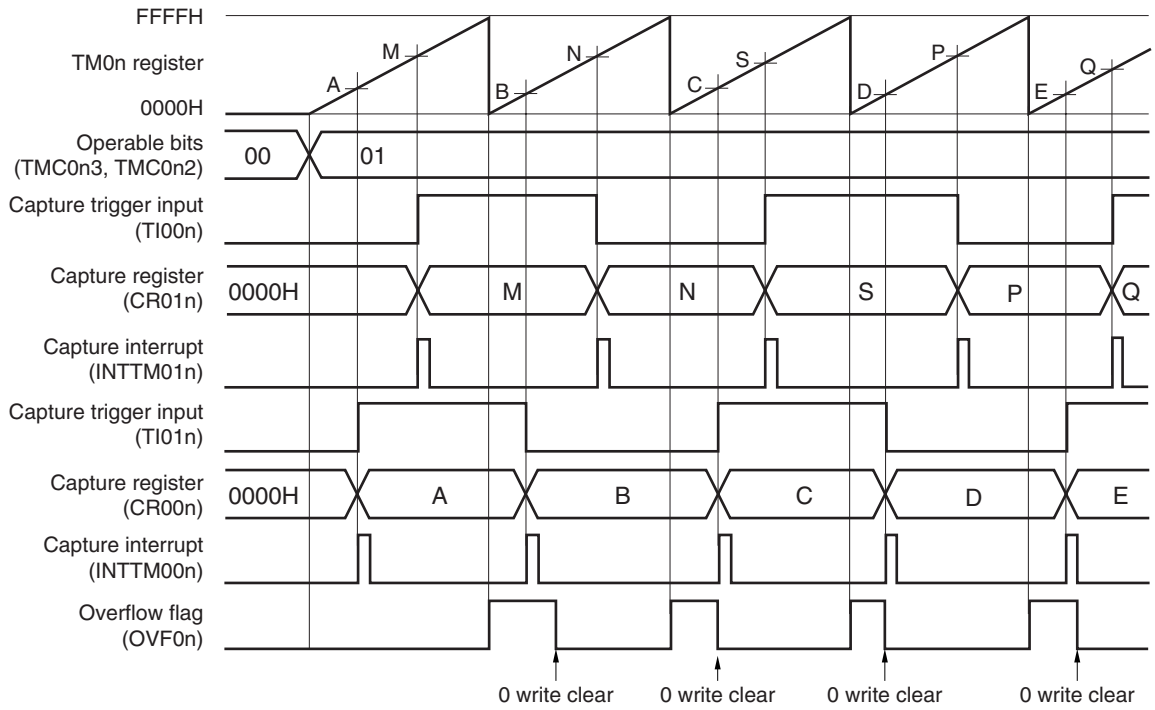

Remark n = 0: 78K0/KE2 products whose flash memory is less than 32 KB, and 78K0/KB2, 78K0/KC2, 78K0/KD2 products

n = 0, 1: 78K0/KE2 products whose flash memory is at least 48 KB, and 78K0/KF2 products

(2) Measuring the pulse width by using one input signal of the TI00n pin (free-running timer mode)

Set the free-running timer mode (TMC0n3 and TMC0n2 = 01). The count value of TM0n is captured to CR00n in the phase reverse to the valid edge detected on the TI00n pin. When the valid edge of the TI00n pin is detected, the count value of TM0n is captured to CR01n.

By this measurement method, values are stored in separate capture registers when a width from one edge to another is measured. Therefore, the capture values do not have to be saved. By subtracting the value of one capture register from that of another, a high-level width, low-level width, and cycle are calculated.

If an overflow occurs, the value becomes negative if one captured value is simply subtracted from another and, therefore, a borrow occurs (bit 0 (CY) of the program status word (PSW) is set to 1). If this happens, ignore CY and take the calculated value as the pulse width. In addition, clear bit 0 (OVF0n) of 16-bit timer mode control register 0n (TMC0n) to 0.

Figure 7-54. Timing Example of Pulse Width Measurement (2)

• TMC0n = 04H, PRM0n = 10H, CRC0n = 07H

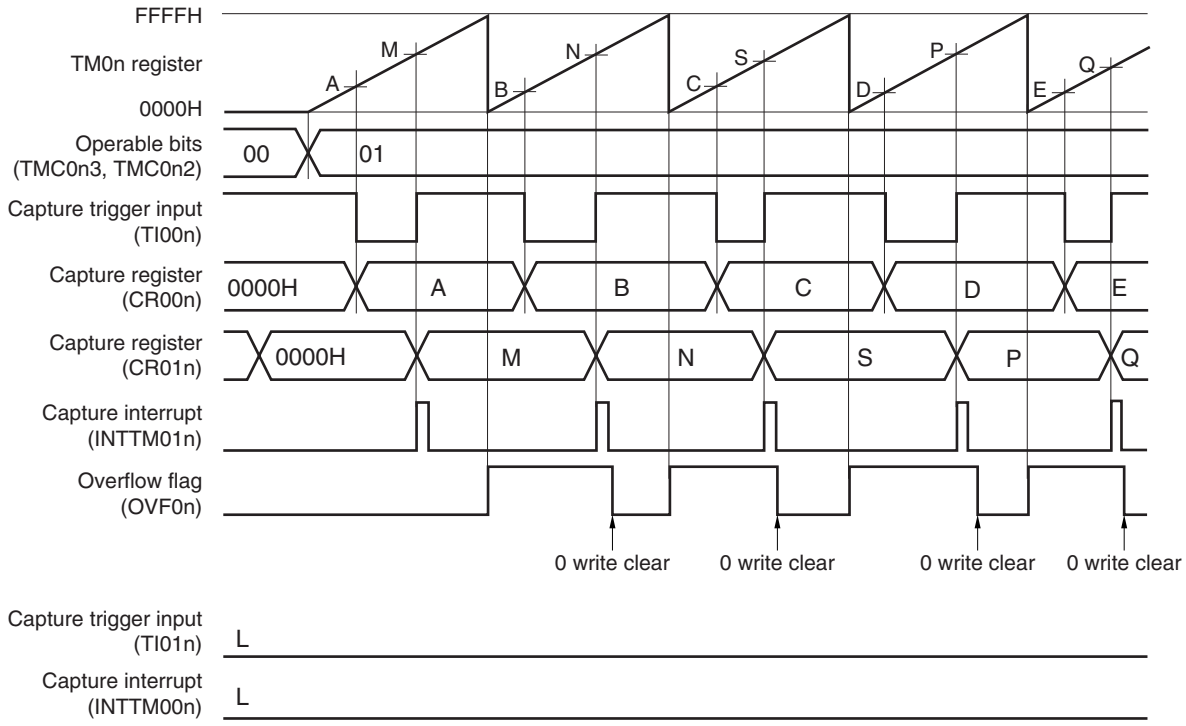

Remark n = 0: 78K0/KE2 products whose flash memory is less than 32 KB, and 78K0/KB2, 78K0/KC2, 78K0/KD2 products

n = 0, 1: 78K0/KE2 products whose flash memory is at least 48 KB, and 78K0/KF2 products

(3) Measuring the pulse width by using one input signal of the TI00n pin (clear & start mode entered by the TI00n pin valid edge input)

Set the clear & start mode entered by the TI00n pin valid edge (TMC0n3 and TMC0n2 = 10). The count value of TM0n is captured to CR00n in the phase reverse to the valid edge of the TI00n pin, and the count value of TM0n is captured to CR01n and TM0n is cleared (0000H) when the valid edge of the TI00n pin is detected. Therefore, a cycle is stored in CR01n if TM0n does not overflow.

If an overflow occurs, take the value that results from adding 10000H to the value stored in CR01n as a cycle. Clear bit 0 (OVF0n) of 16-bit timer mode control register 0n (TMC0n) to 0.

Figure 7-55. Timing Example of Pulse Width Measurement (3)

• TMC0n = 08H, PRM0n = 10H, CRC0n = 07H

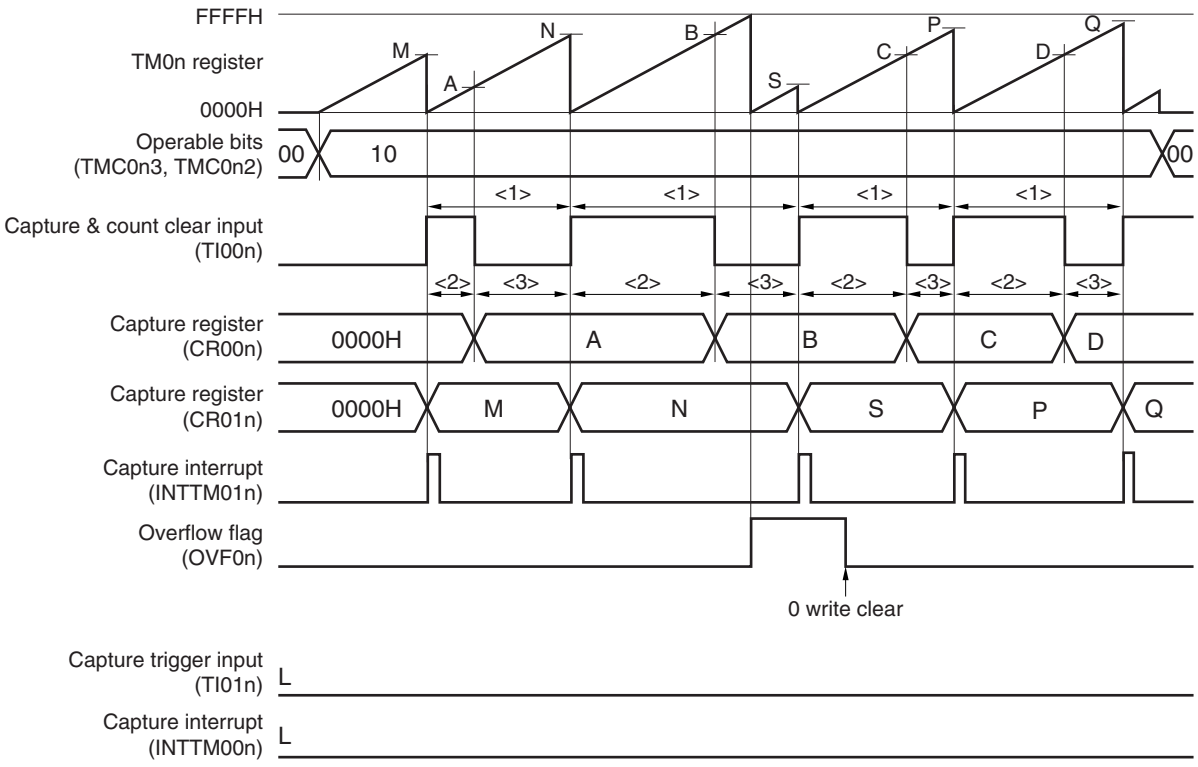

<1> Pulse cycle = (10000H × Number of times OVF0n bit is set to 1 + Captured value of CR01n) × Count clock cycle

<2> High-level pulse width = (10000H × Number of times OVF0n bit is set to 1 + Captured value of CR00n) × Count clock cycle

<3> Low-level pulse width = (Pulse cycle − High-level pulse width)

Remark n = 0: 78K0/KE2 products whose flash memory is less than 32 KB, and 78K0/KB2, 78K0/KC2, 78K0/KD2 products

n = 0, 1: 78K0/KE2 products whose flash memory is at least 48 KB, and 78K0/KF2 products

Figure 7-56. Example of Register Settings for Pulse Width Measurement (1/2)

(a) 16-bit timer mode control register 0n (TMC0n)

				TMC0n3	TMC0n2	TMC0n1	OVF0n
0	0	0	0	0/1	0/1	0	0

01: Free running timer mode
10: Clear and start mode entered by valid edge of TI00n pin.

(b) Capture/compare control register 0n (CRC0n)

					CRC0n2	CRC0n1	CRC0n0
0	0	0	0	0	1	0/1	1

1: CR00n used as capture register

0: TI01n pin is used as capture trigger of CR00n.
1: Reverse phase of TI00n pin is used as capture trigger of CR00n.

1: CR01n used as capture register

(c) 16-bit timer output control register 0n (TOC0n)

	OSPT0n	OSPE0n	TOC0n4	LVS0n	LVR0n	TOC0n1	TOE0n
0	0	0	0	0	0	0	0

(d) Prescaler mode register 0n (PRM0n)

ES1n1	ES1n0	ES0n1	ES0n0	3	2	PRM0n1	PRM0n0
0/1	0/1	0/1	0/1	0	0	0/1	0/1

Selects count clock
(setting valid edge of TI00n is prohibited)

00: Falling edge detection
01: Rising edge detection
10: Setting prohibited
11: Both edges detection
(setting when CRC0n1 = 1 is prohibited)

00: Falling edge detection
01: Rising edge detection
10: Setting prohibited
11: Both edges detection

Remark n = 0: 78K0/KE2 products whose flash memory is less than 32 KB, and 78K0/KB2, 78K0/KC2, 78K0/KD2 products

n = 0, 1: 78K0/KE2 products whose flash memory is at least 48 KB, and 78K0/KF2 products

Figure 7-56. Example of Register Settings for Pulse Width Measurement (2/2)

(e) 16-bit timer counter 0n (TM0n)

By reading TM0n, the count value can be read.

(f) 16-bit capture/compare register 00n (CR00n)

This register is used as a capture register. Either the TI00n or TI01n pin is selected as a capture trigger. When a specified edge of the capture trigger is detected, the count value of TM0n is stored in CR00n.

(g) 16-bit capture/compare register 01n (CR01n)

This register is used as a capture register. The signal input to the TI00n pin is used as a capture trigger. When the capture trigger is detected, the count value of TM0n is stored in CR01n.

Remark n = 0: 78K0/KE2 products whose flash memory is less than 32 KB, and 78K0/KB2, 78K0/KC2, 78K0/KD2 products

n = 0, 1: 78K0/KE2 products whose flash memory is at least 48 KB, and 78K0/KF2 products

Figure 7-57. Example of Software Processing for Pulse Width Measurement (1/2)

(a) Example of free-running timer mode

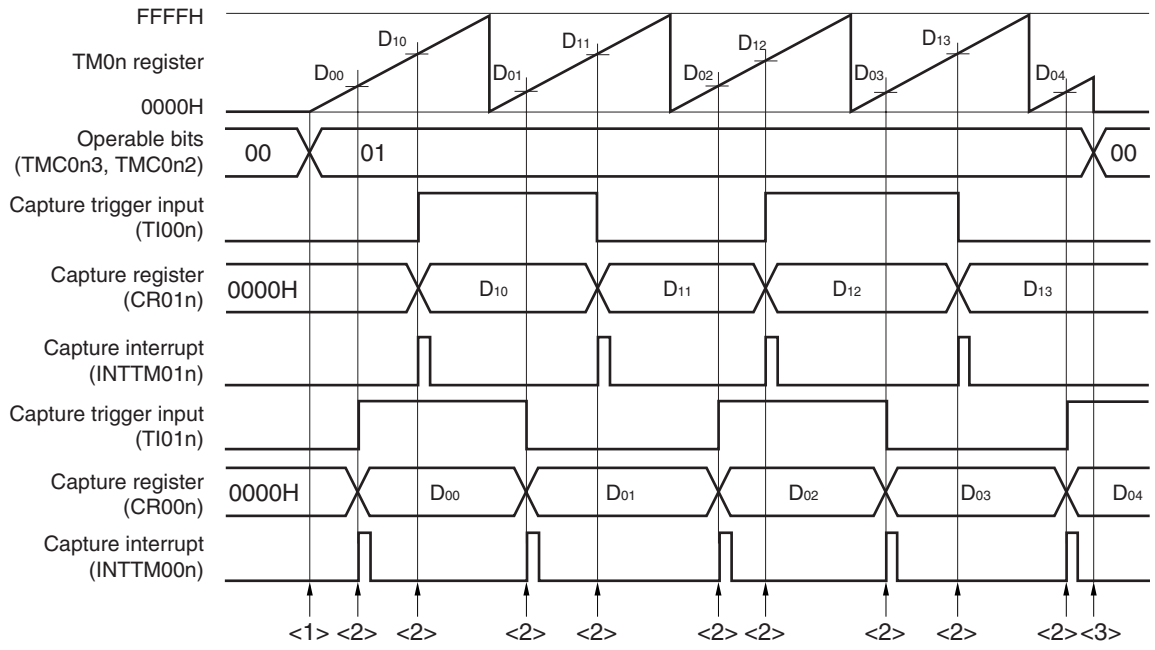

(b) Example of clear & start mode entered by TI00n pin valid edge

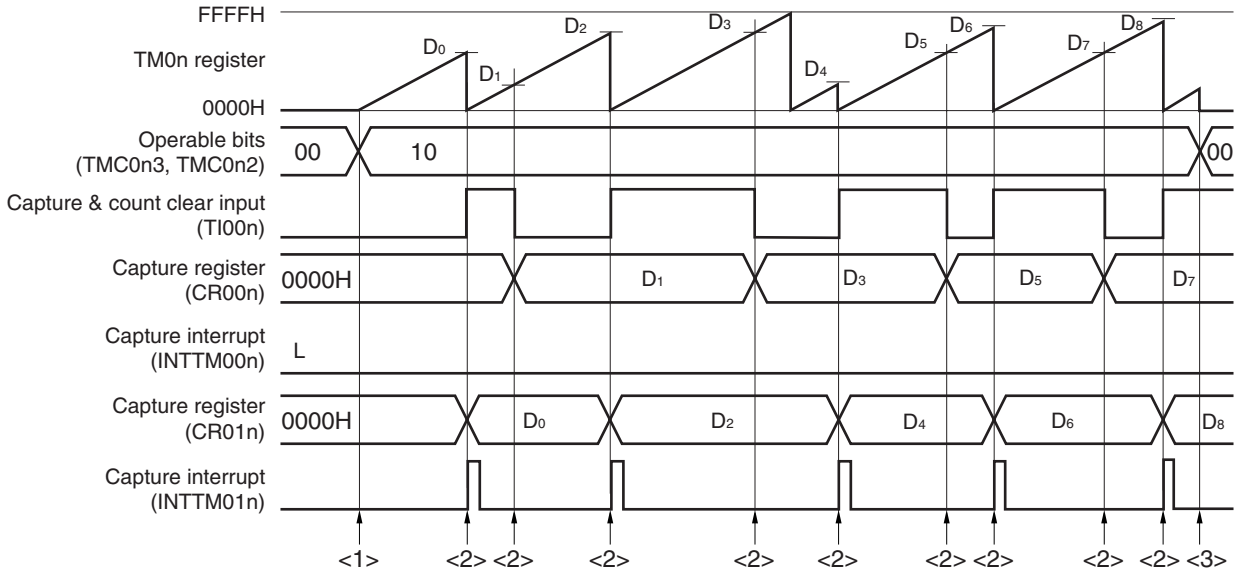

Remark n = 0: 78K0/KE2 products whose flash memory is less than 32 KB, and 78K0/KB2, 78K0/KC2, 78K0/KD2 products

n = 0, 1: 78K0/KE2 products whose flash memory is at least 48 KB, and 78K0/KF2 products

Figure 7-57. Example of Software Processing for Pulse Width Measurement (2/2)

<1> Count operation start flow

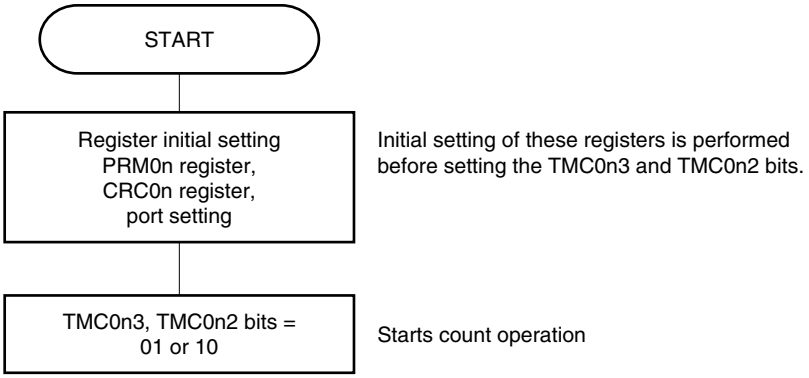

<2> Capture trigger input flow

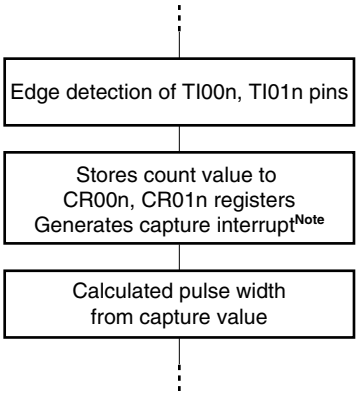

<3> Count operation stop flow

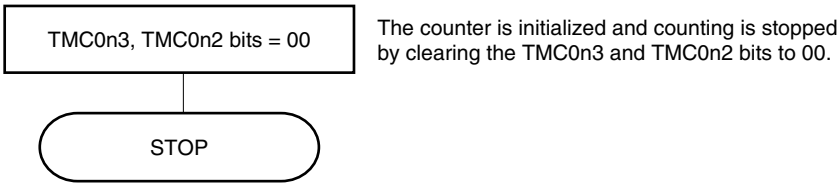

Note The capture interrupt signal (INTTM00n) is not generated when the reverse-phase edge of the TI00n pin input is selected to the valid edge of CR00n.

Remark n = 0: 78K0/KE2 products whose flash memory is less than 32 KB, and 78K0/KB2, 78K0/KC2, 78K0/KD2 products

n = 0, 1: 78K0/KE2 products whose flash memory is at least 48 KB, and 78K0/KF2 products

7.5 Special Use of TM0n

7.5.1 Rewriting CR01n during TM0n operation

In principle, rewriting CR00n and CR01n of the 78K0/Kx2 microcontrollers when they are used as compare registers is prohibited while TM0n is operating (TMC0n3 and TMC0n2 = other than 00).

However, the value of CR01n can be changed, even while TM0n is operating, using the following procedure if CR01n is used for PPG output and the duty factor is changed. (When changing the value of CR01n to a smaller value than the current one, rewrite it immediately after its value matches the value of TM0n. When changing the value of CR01n to a larger value than the current one, rewrite it immediately after the values of CR00n and TM0n match. If the value of CR01n is rewritten immediately before a match between CR01n and TM0n, or between CR00n and TM0n, an unexpected operation may be performed.).

Procedure for changing value of CR01n

<1> Disable interrupt INTTM01n (TMMK01n = 1).
<2> Disable reversal of the timer output when the value of TM0n matches that of CR01n (TOC0n4 = 0).
<3> Change the value of CR01n.
<4> Wait for one cycle of the count clock of TM0n.
<5> Enable reversal of the timer output when the value of TM0n matches that of CR01n (TOC0n4 = 1).
<6> Clear the interrupt flag of INTTM01n (TMIF01n = 0) to 0.
<7> Enable interrupt INTTM01n (TMMK01n = 0).

Remark For TMIF01n and TMMK01n, see **CHAPTER 20 INTERRUPT FUNCTIONS**.

7.5.2 Setting LVS0n and LVR0n

(1) Usage of LVS0n and LVR0n

LVS0n and LVR0n are used to set the default value of the TO0n output and to invert the timer output without enabling the timer operation (TMC0n3 and TMC0n2 = 00). Clear LVS0n and LVR0n to 00 (default value: low-level output) when software control is unnecessary.

LVS0n	LVR0n	Timer Output Status
0	0	Not changed (low-level output)
0	1	Cleared (low-level output)
1	0	Set (high-level output)
1	1	Setting prohibited

Remark n = 0: 78K0/KE2 products whose flash memory is less than 32 KB, and 78K0/KB2, 78K0/KC2, 78K0/KD2 products
n = 0, 1: 78K0/KE2 products whose flash memory is at least 48 KB, and 78K0/KF2 products

(2) Setting LVS0n and LVR0n

Set LVS0n and LVR0n using the following procedure.

Figure 7-58. Example of Flow for Setting LVS0n and LVR0n Bits

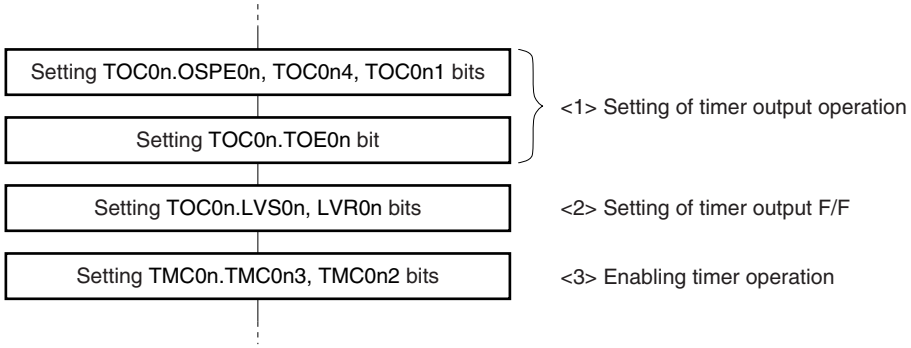

Caution Be sure to set LVS0n and LVR0n following steps <1>, <2>, and <3> above.
Step <2> can be performed after <1> and before <3>.

Figure 7-59. Timing Example of LVR0n and LVS0n

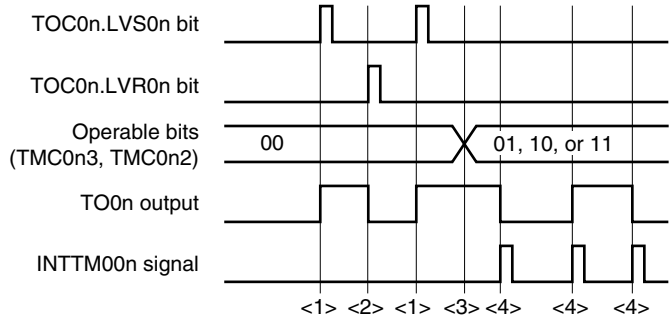

<1> The TO0n output goes high when LVS0n and LVR0n = 10.

<2> The TO0n output goes low when LVS0n and LVR0n = 01 (the pin output remains unchanged from the high level even if LVS0n and LVR0n are cleared to 00).

<3> The timer starts operating when TMC0n3 and TMC0n2 are set to 01, 10, or 11. Because LVS0n and LVR0n were set to 10 before the operation was started, the TO0n output starts from the high level. After the timer starts operating, setting LVS0n and LVR0n is prohibited until TMC0n3 and TMC0n2 = 00 (disabling the timer operation).

<4> The TO0n output level is inverted each time an interrupt signal (INTTM00n) is generated.

Remark n = 0: 78K0/KE2 products whose flash memory is less than 32 KB, and 78K0/KB2, 78K0/KC2, 78K0/KD2 products

n = 0, 1: 78K0/KE2 products whose flash memory is at least 48 KB, and 78K0/KF2 products

7.6 Cautions for 16-Bit Timer/Event Counters 00 and 01

(1) Restrictions for each channel of 16-bit timer/event counter 0n

Table 7-3 shows the restrictions for each channel.

Table 7-3. Restrictions for Each Channel of 16-Bit Timer/Event Counter 0n

Operation	Restriction
As interval timer	–
As square-wave output	
As external event counter	
As clear & start mode entered by TI00n pin valid edge input	Using timer output (TO0n) is prohibited when detection of the valid edge of the TI01n pin is used. (TOC0n = 00H)
As free-running timer	–
As PPG output	0000H ≤ CP01n < CR00n ≤ FFFFH
As one-shot pulse output	Setting the same value to CR00n and CP01n is prohibited.
As pulse width measurement	Using timer output (TO0n) is prohibited (TOC0n = 00H)

(2) Timer start errors

An error of up to one clock may occur in the time required for a match signal to be generated after timer start. This is because counting TM0n is started asynchronously to the count pulse.

Figure 7-60. Start Timing of TM0n Count

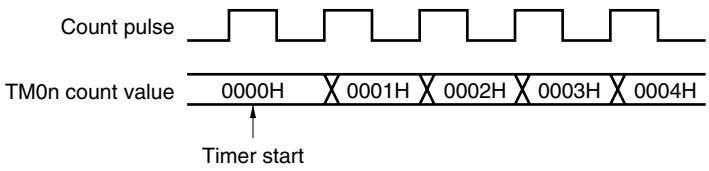

(3) Setting of CR00n and CR01n (clear & start mode entered upon a match between TM0n and CR00n)

Set a value other than 0000H to CR00n and CR01n (TM0n cannot count one pulse when it is used as an external event counter).

Remark n = 0: 78K0/KE2 products whose flash memory is less than 32 KB, and 78K0/KB2, 78K0/KC2, 78K0/KD2 products

n = 0, 1: 78K0/KE2 products whose flash memory is at least 48 KB, and 78K0/KF2 products

(4) Timing of holding data by capture register

(a) When the valid edge is input to the TI00n/TI01n pin and the reverse phase of the TI00n pin is detected while CR00n/CR01n is read, CR01n performs a capture operation but the read value of CR00n/CR01n is not guaranteed. At this time, an interrupt signal (INTTM00n/INTTM01n) is generated when the valid edge of the TI00n/TI01n pin is detected (the interrupt signal is not generated when the reverse-phase edge of the TI00n pin is detected).

When the count value is captured because the valid edge of the TI00n/TI01n pin was detected, read the value of CR00n/CR01n after INTTM00n/INTTM01n is generated.

Figure 7-61. Timing of Holding Data by Capture Register

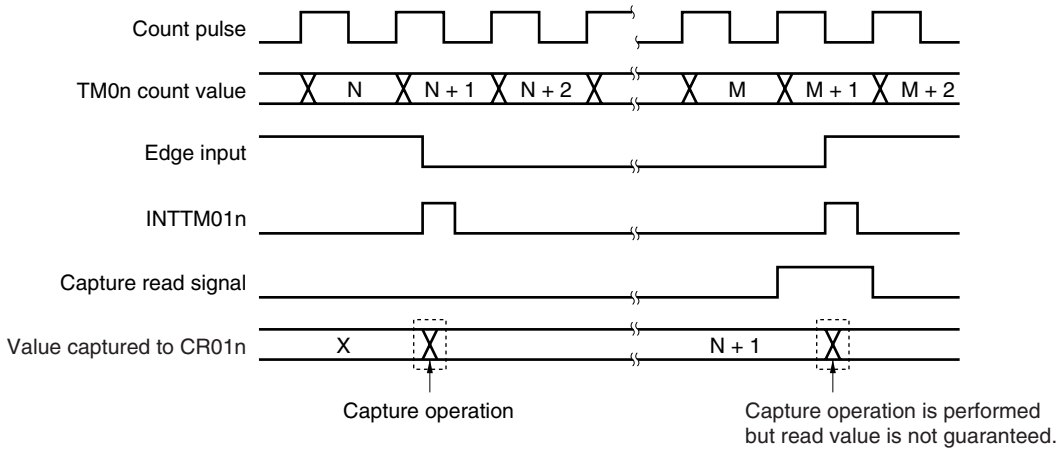

(b) The values of CR00n and CR01n are not guaranteed after 16-bit timer/event counter 0n stops.

(5) Setting valid edge

Set the valid edge of the TI00n pin while the timer operation is stopped (TMC0n3 and TMC0n2 = 00). Set the valid edge by using ES0n0 and ES0n1.

(6) Re-triggering one-shot pulse

Make sure that the trigger is not generated while an active level is being output in the one-shot pulse output mode. Be sure to input the next trigger after the current active level is output.

Remark n = 0: 78K0/KE2 products whose flash memory is less than 32 KB, and 78K0/KB2, 78K0/KC2, 78K0/KD2 products

n = 0, 1: 78K0/KE2 products whose flash memory is at least 48 KB, and 78K0/KF2 products

(7) Operation of OVF0n flag

(a) Setting OVF0n flag (1)

The OVF0n flag is set to 1 in the following case, as well as when TM0n overflows.

Select the clear & start mode entered upon a match between TM0n and CR00n.

↓

Set CR00n to FFFFH.

↓

When TM0n matches CR00n and TM0n is cleared from FFFFH to 0000H

Figure 7-62. Operation Timing of OVF0n Flag

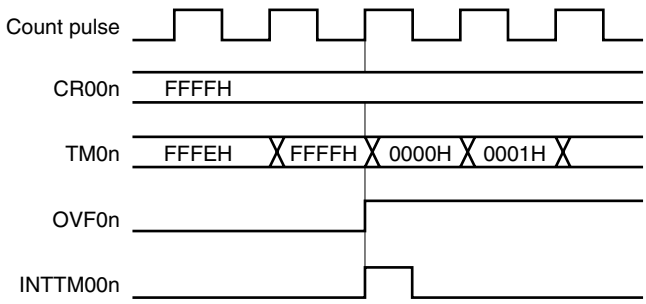

(b) Clearing OVF0n flag

Even if the OVF0n flag is cleared to 0 after TM0n overflows and before the next count clock is counted (before the value of TM0n becomes 0001H), it is set to 1 again and clearing is invalid.

(8) One-shot pulse output

One-shot pulse output operates correctly in the free-running timer mode or the clear & start mode entered by the TI00n pin valid edge. The one-shot pulse cannot be output in the clear & start mode entered upon a match between TM0n and CR00n.

Remark n = 0: 78K0/KE2 products whose flash memory is less than 32 KB, and 78K0/KB2, 78K0/KC2, 78K0/KD2 products

n = 0, 1: 78K0/KE2 products whose flash memory is at least 48 KB, and 78K0/KF2 products

(9) Capture operation

(a) When valid edge of TI00n is specified as count clock

When the valid edge of TI00n is specified as the count clock, the capture register for which TI00n is specified as a trigger does not operate correctly.

(b) Pulse width to accurately capture value by signals input to TI01n and TI00n pins

To accurately capture the count value, the pulse input to the TI00n and TI01n pins as a capture trigger must be wider than two count clocks selected by PRM0n (see **Figure 7-9**).

(c) Generation of interrupt signal

The capture operation is performed at the falling edge of the count clock but the interrupt signals (INTTM00n and INTTM01n) are generated at the rising edge of the next count clock (see **Figure 7-9**).

(d) Note when CRC0n1 (bit 1 of capture/compare control register 0n (CRC0n)) is set to 1

When the count value of the TM0n register is captured to the CR00n register in the phase reverse to the signal input to the TI00n pin, the interrupt signal (INTTM00n) is not generated after the count value is captured. If the valid edge is detected on the TI01n pin during this operation, the capture operation is not performed but the INTTM00n signal is generated as an external interrupt signal. Mask the INTTM00n signal when the external interrupt is not used.

(10) Edge detection

(a) Specifying valid edge after reset

If the operation of the 16-bit timer/event counter 0n is enabled after reset and while the TI00n or TI01n pin is at high level and when the rising edge or both the edges are specified as the valid edge of the TI00n or TI01n pin, then the high level of the TI00n or TI01n pin is detected as the rising edge. Note this when the TI00n or TI01n pin is pulled up. However, the rising edge is not detected when the operation is once stopped and then enabled again.

(b) Sampling clock for eliminating noise

The sampling clock for eliminating noise differs depending on whether the valid edge of TI00n is used as the count clock or capture trigger. In the former case, the sampling clock is fixed to f_{PRS}. In the latter, the count clock selected by PRM0n is used for sampling.

When the signal input to the TI00n pin is sampled and the valid level is detected two times in a row, the valid edge is detected. Therefore, noise having a short pulse width can be eliminated (see **Figure 7-9**).

(11) Timer operation

The signal input to the TI00n/TI01n pin is not acknowledged while the timer is stopped, regardless of the operation mode of the CPU.

Remarks 1. f_{PRS}: Peripheral hardware clock frequency

2. n = 0: 78K0/KE2 products whose flash memory is less than 32 KB, and 78K0/KB2, 78K0/KC2, 78K0/KD2 products

n = 0, 1: 78K0/KE2 products whose flash memory is at least 48 KB, and 78K0/KF2 products

(12) Reading of 16-bit timer counter 0n (TM0n)

TM0n can be read without stopping the actual counter, because the count values captured to the buffer are fixed when it is read. The buffer, however, may not be updated when it is read immediately before the counter counts up, because the buffer is updated at the timing the counter counts up.

Figure 7-63. 16-bit Timer Counter 0n (TM0n) Read Timing

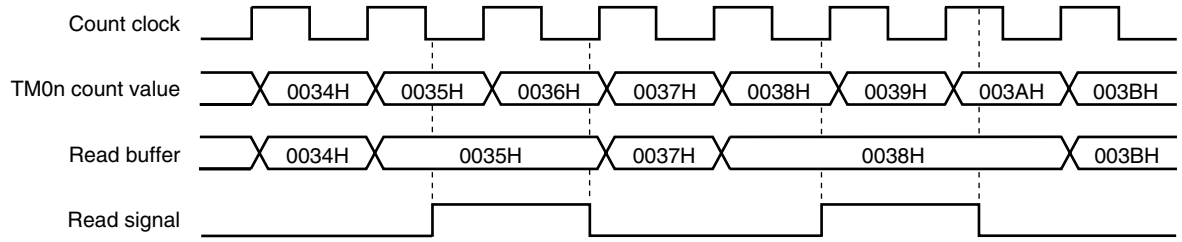

Remark n = 0: 78K0/KE2 products whose flash memory is less than 32 KB, and 78K0/KB2, 78K0/KC2, 78K0/KD2 products

n = 0, 1: 78K0/KE2 products whose flash memory is at least 48 KB, and 78K0/KF2 products

CHAPTER 8 8-BIT TIMER/EVENT COUNTERS 50 AND 51

8.1 Functions of 8-Bit Timer/Event Counters 50 and 51

8-bit timer/event counters 50 and 51 are mounted onto all 78K0/Kx2 microcontroller products.
8-bit timer/event counters 50 and 51 have the following functions.

- Interval timer
- External event counter
- Square-wave output
- PWM output

8.2 Configuration of 8-Bit Timer/Event Counters 50 and 51

8-bit timer/event counters 50 and 51 include the following hardware.

Table 8-1. Configuration of 8-Bit Timer/Event Counters 50 and 51

Item	Configuration
Timer register	8-bit timer counter 5n (TM5n)
Register	8-bit timer compare register 5n (CR5n)
Timer input	TI5n
Timer output	TO5n
Control registers	Timer clock selection register 5n (TCL5n) 8-bit timer mode control register 5n (TMC5n) Port mode register 1 (PM1) or port mode register 3 (PM3) Port register 1 (P1) or port register 3 (P3)

Figures 8-1 and 8-2 show the block diagrams of 8-bit timer/event counters 50 and 51.

Figure 8-1. Block Diagram of 8-Bit Timer/Event Counter 50

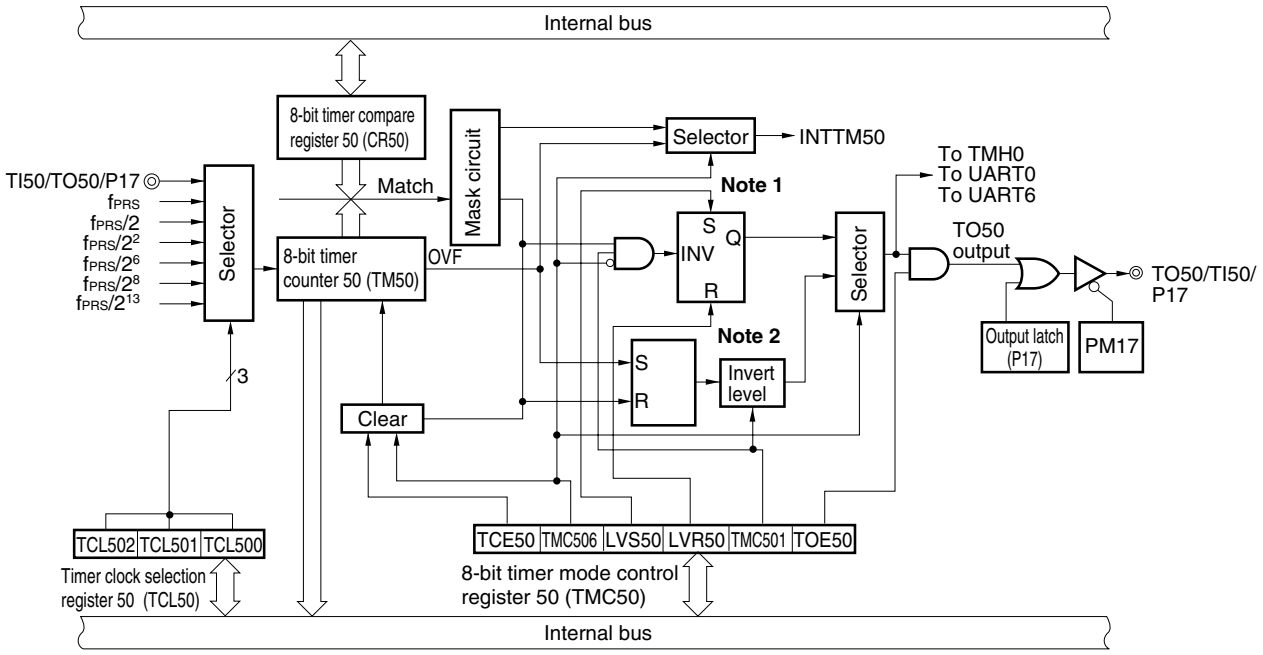

Figure 8-2. Block Diagram of 8-Bit Timer/Event Counter 51

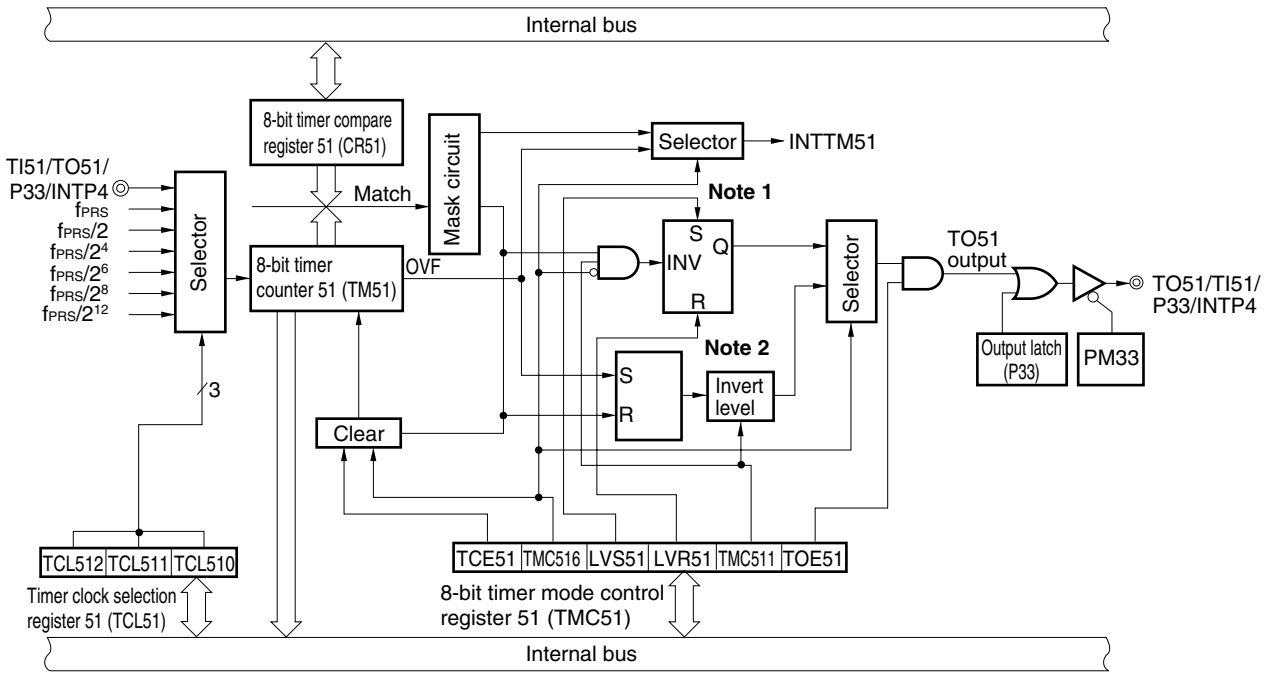

Notes 1. Timer output F/F

2. PWM output F/F

(1) 8-bit timer counter 5n (TM5n)

TM5n is an 8-bit register that counts the count pulses and is read-only.

The counter is incremented in synchronization with the rising edge of the count clock.

Figure 8-3. Format of 8-Bit Timer Counter 5n (TM5n)

Address: FF16H (TM50), FF1FH (TM51) After reset: 00H R

Symbol	7	6	5	4	3	2	1	0
TM5n (n = 0, 1)								

In the following situations, the count value is cleared to 00H.

<1> Reset signal generation

<2> When TCE5n is cleared

<3> When TM5n and CR5n match in the mode in which clear & start occurs upon a match of the TM5n and CR5n.

(2) 8-bit timer compare register 5n (CR5n)

CR5n can be read and written by an 8-bit memory manipulation instruction.

Except in PWM mode, the value set in CR5n is constantly compared with the 8-bit timer counter 5n (TM5n) count value, and an interrupt request (INTTM5n) is generated if they match.

In the PWM mode, TO5n output becomes inactive when the values of TM5n and CR5n match, but no interrupt is generated.

The value of CR5n can be set within 00H to FFH.

Reset signal generation clears CR5n to 00H.

Figure 8-4. Format of 8-Bit Timer Compare Register 5n (CR5n)

Address: FF17H (CR50), FF41H (CR51) After reset: 00H R/W

Symbol	7	6	5	4	3	2	1	0
CR5n (n = 0, 1)								

Cautions 1. In the mode in which clear & start occurs on a match of TM5n and CR5n (TMC5n6 = 0), do not write other values to CR5n during operation.

2. In PWM mode, make the CR5n rewrite period 3 count clocks of the count clock (clock selected by TCL5n) or more.

Remark n = 0, 1

8.3 Registers Controlling 8-Bit Timer/Event Counters 50 and 51

The following four registers are used to control 8-bit timer/event counters 50 and 51.

- Timer clock selection register 5n (TCL5n)
- 8-bit timer mode control register 5n (TMC5n)
- Port mode register 1 (PM1) or port mode register 3 (PM3)
- Port register 1 (P1) or port register 3 (P3)

(1) Timer clock selection register 5n (TCL5n)

This register sets the count clock of 8-bit timer/event counter 5n and the valid edge of the TI5n pin input.

TCL5n can be set by a 1-bit or 8-bit memory manipulation instruction.

Reset signal generation clears TCL5n to 00H.

Remark n = 0, 1

Figure 8-5. Format of Timer Clock Selection Register 50 (TCL50)

Address: FF6AH After reset: 00H R/W

Symbol	7	6	5	4	3	2	1	0
TCL50	0	0	0	0	0	TCL502	TCL501	TCL500

TCL502	TCL501	TCL500	Count clock selection[Note 1]				
				f_{PRS} = 2 MHz	f_{PRS} = 5 MHz	f_{PRS} = 10 MHz	f_{PRS} = 20 MHz
0	0	0	TI50 pin falling edge[Note 2]				
0	0	1	TI50 pin rising edge[Note 2]				
0	1	0	f_{PRS}[Note 3]	2 MHz	5 MHz	10 MHz	20 MHz[Note 4]
0	1	1	$f_{PRS}/2$	1 MHz	2.5 MHz	5 MHz	10 MHz
1	0	0	$f_{PRS}/2^2$	500 kHz	1.25 MHz	2.5 MHz	5 MHz
1	0	1	$f_{PRS}/2^6$	31.25 kHz	78.13 kHz	156.25 kHz	312.5 kHz
1	1	0	$f_{PRS}/2^8$	7.81 kHz	19.53 kHz	39.06 kHz	78.13 kHz
1	1	1	$f_{PRS}/2^{13}$	0.24 kHz	0.61 kHz	1.22 kHz	2.44 kHz

Notes 1. The frequency that can be used for the peripheral hardware clock (f_{PRS}) differs depending on the power supply voltage and product specifications.

Supply Voltage	Conventional-specification Products (μPD78F05xx and 78F05xxD)	Expanded-specification Products (μPD78F05xxA and 78F05xxDA)
4.0 V ≤ V_{DD} ≤ 5.5 V	f_{PRS} ≤ 20 MHz	f_{PRS} ≤ 20 MHz
2.7 V ≤ V_{DD} < 4.0 V	f_{PRS} ≤ 10 MHz	
1.8 V ≤ V_{DD} < 2.7 V (Standard products and (A) grade products only)	f_{PRS} ≤ 5 MHz	f_{PRS} ≤ 5 MHz

(The values shown in the table above are those when $f_{PRS} = f_{XH}$ (XSEL = 1).)

2. Do not start timer operation with the external clock from the TI50 pin when the internal high-speed oscillation clock and high-speed system clock are stopped while the CPU operates with the subsystem clock, or when in the STOP mode.

3. If the peripheral hardware clock (f_{PRS}) operates on the internal high-speed oscillation clock (f_{RH}) (XSEL = 0), when 1.8 V ≤ V_{DD} < 2.7 V, the setting of TCL502, TCL501, TCL500 = 0, 1, 0 (count clock: f_{PRS}) is prohibited.

4. This is settable only if 4.0 V ≤ V_{DD} ≤ 5.5 V.

Cautions 1. When rewriting TCL50 to other data, stop the timer operation beforehand.

2. Be sure to clear bits 3 to 7 to "0".

Remark f_{PRS}: Peripheral hardware clock frequency

Figure 8-6. Format of Timer Clock Selection Register 51 (TCL51)

Address: FF8CH After reset: 00H R/W

Symbol	7	6	5	4	3	2	1	0
TCL51	0	0	0	0	0	TCL512	TCL511	TCL510

TCL512	TCL511	TCL510	Count clock selection[Note 1]				
				f_{PRS} = 2 MHz	f_{PRS} = 5 MHz	f_{PRS} = 10 MHz	f_{PRS} = 20 MHz
0	0	0	TI51 pin falling edge[Note 2]				
0	0	1	TI51 pin rising edge[Note 2]				
0	1	0	f_{PRS}[Note 3]	2 MHz	5 MHz	10 MHz	20 MHz[Note 4]
0	1	1	$f_{PRS}/2$	1 MHz	2.5 MHz	5 MHz	10 MHz
1	0	0	$f_{PRS}/2^4$	125 kHz	312.5 kHz	625 kHz	1.25 MHz
1	0	1	$f_{PRS}/2^6$	31.25 kHz	78.13 kHz	156.25 kHz	312.5 kHz
1	1	0	$f_{PRS}/2^8$	7.81 kHz	19.53 kHz	39.06 kHz	78.13 kHz
1	1	1	$f_{PRS}/2^{12}$	0.49 kHz	1.22 kHz	2.44 kHz	4.88 kHz

Notes 1. The frequency that can be used for the peripheral hardware clock (f_{PRS}) differs depending on the power supply voltage and product specifications.

Supply Voltage	Conventional-specification Products (μPD78F05xx and 78F05xxD)	Expanded-specification Products (μPD78F05xxA and 78F05xxDA)
4.0 V ≤ V_{DD} ≤ 5.5 V	f_{PRS} ≤ 20 MHz	f_{PRS} ≤ 20 MHz
2.7 V ≤ V_{DD} < 4.0 V	f_{PRS} ≤ 10 MHz	
1.8 V ≤ V_{DD} < 2.7 V (Standard products and (A) grade products only)	f_{PRS} ≤ 5 MHz	f_{PRS} ≤ 5 MHz

(The values shown in the table above are those when $f_{PRS} = f_{XH}$ (XSEL = 1).)

2. Do not start timer operation with the external clock from the TI51 pin when the internal high-speed oscillation clock and high-speed system clock are stopped while the CPU operates with the subsystem clock, or when in the STOP mode.

3. If the peripheral hardware clock (f_{PRS}) operates on the internal high-speed oscillation clock (f_{RH}) (XSEL = 0), when 1.8 V ≤ V_{DD} < 2.7 V, the setting of TCL512, TCL511, TCL510 = 0, 1, 0 (count clock: f_{PRS}) is prohibited.

4. This is settable only if 4.0 V ≤ V_{DD} ≤ 5.5 V.

Cautions 1. When rewriting TCL51 to other data, stop the timer operation beforehand.

2. Be sure to clear bits 3 to 7 to "0".

Remark f_{PRS}: Peripheral hardware clock frequency

(2) 8-bit timer mode control register 5n (TMC5n)

TMC5n is a register that performs the following five types of settings.

<1> 8-bit timer counter 5n (TM5n) count operation control
<2> 8-bit timer counter 5n (TM5n) operating mode selection
<3> Timer output F/F (flip flop) status setting
<4> Active level selection in timer F/F control or PWM (free-running) mode.
<5> Timer output control

TMC5n can be set by a 1-bit or 8-bit memory manipulation instruction.
Reset signal generation clears this register to 00H.

Remark n = 0, 1

Figure 8-7. Format of 8-Bit Timer Mode Control Register 50 (TMC50)

Address: FF6BH After reset: 00H R/W[Note]

Symbol	<7>	6	5	4	<3>	<2>	1	<0>
TMC50	TCE50	TMC506	0	0	LVS50	LVR50	TMC501	TOE50

TCE50	TM50 count operation control
0	After clearing to 0, count operation disabled (counter stopped)
1	Count operation start

TMC506	TM50 operating mode selection
0	Mode in which clear & start occurs on a match between TM50 and CR50
1	PWM (free-running) mode

LVS50	LVR50	Timer output F/F status setting
0	0	No change
0	1	Timer output F/F clear (0) (default value of TO50 output: low level)
1	0	Timer output F/F set (1) (default value of TO50 output: high level)
1	1	Setting prohibited

TMC501	In other modes (TMC506 = 0)	In PWM mode (TMC506 = 1)
	Timer F/F control	Active level selection
0	Inversion operation disabled	Active-high
1	Inversion operation enabled	Active-low

TOE50	Timer output control
0	Output disabled (TO50 output is low level)
1	Output enabled

Note Bits 2 and 3 are write-only.

(**Cautions** and **Remarks** are listed on the next page.)

Figure 8-8. Format of 8-Bit Timer Mode Control Register 51 (TMC51)

Address: FF43H After reset: 00H R/W[Note]

Symbol	<7>	6	5	4	<3>	<2>	1	<0>
TMC51	TCE51	TMC516	0	0	LVS51	LVR51	TMC511	TOE51

TCE51	TM51 count operation control
0	After clearing to 0, count operation disabled (counter stopped)
1	Count operation start

TMC516	TM51 operating mode selection
0	Mode in which clear & start occurs on a match between TM51 and CR51
1	PWM (free-running) mode

LVS51	LVR51	Timer output F/F status setting
0	0	No change
0	1	Timer output F/F clear (0) (default value of TO51 output: low)
1	0	Timer output F/F set (1) (default value of TO51 output: high)
1	1	Setting prohibited

TMC511	In other modes (TMC516 = 0)	In PWM mode (TMC516 = 1)
	Timer F/F control	Active level selection
0	Inversion operation disabled	Active-high
1	Inversion operation enabled	Active-low

TOE51	Timer output control
0	Output disabled (TO51 output is low level)
1	Output enabled

Note Bits 2 and 3 are write-only.

Cautions 1. The settings of LVS5n and LVR5n are valid in other than PWM mode.

2. Perform <1> to <4> below in the following order, not at the same time.

<1> Set TMC5n1, TMC5n6: Operation mode setting

<2> Set TOE5n to enable output: Timer output enable

<3> Set LVS5n, LVR5n (see Caution 1): Timer F/F setting

<4> Set TCE5n

3. When TCE5n = 1, setting the other bits of TMC5n is prohibited.

4. The actual TO50/TI50/P17 and TO51/TI51/P33/INTP4 pin outputs are determined depending on PM17 and P17, and PM33 and P33, besides TO5n output.

Remarks 1. In PWM mode, PWM output is made inactive by clearing TCE5n to 0.

2. If LVS5n and LVR5n are read, the value is 0.

3. The values of the TMC5n6, LVS5n, LVR5n, TMC5n1, and TOE5n bits are reflected at the TO5n output regardless of the value of TCE5n.

4. n = 0, 1

(3) Port mode registers 1 and 3 (PM1, PM3)

These registers set port 1 and 3 input/output in 1-bit units.

When using the P17/TO50/TI50 and P33/TO51/TI51/INTP4 pins for timer output, clear PM17 and PM33 and the output latches of P17 and P33 to 0.

When using the P17/TO50/TI50 and P33/TO51/TI51/INTP4 pins for timer input, set PM17 and PM33 to 1. The output latches of P17 and P33 at this time may be 0 or 1.

PM1 and PM3 can be set by a 1-bit or 8-bit memory manipulation instruction.

Reset signal generation sets these registers to FFH.

Figure 8-9. Format of Port Mode Register 1 (PM1)

Address: FF21H After reset: FFH R/W

Symbol	7	6	5	4	3	2	1	0
PM1	PM17	PM16	PM15	PM14	PM13	PM12	PM11	PM10

PM1n	P1n pin I/O mode selection (n = 0 to 7)
0	Output mode (output buffer on)
1	Input mode (output buffer off)

Figure 8-10. Format of Port Mode Register 3 (PM3)

Address: FF23H After reset: FFH R/W

Symbol	7	6	5	4	3	2	1	0
PM3	1	1	1	1	PM33	PM32	PM31	PM30

PM3n	P3n pin I/O mode selection (n = 0 to 3)
0	Output mode (output buffer on)
1	Input mode (output buffer off)

8.4 Operations of 8-Bit Timer/Event Counters 50 and 51

8.4.1 Operation as interval timer

8-bit timer/event counter 5n operates as an interval timer that generates interrupt requests repeatedly at intervals of the count value preset to 8-bit timer compare register 5n (CR5n).

When the count value of 8-bit timer counter 5n (TM5n) matches the value set to CR5n, counting continues with the TM5n value cleared to 0 and an interrupt request signal (INTTM5n) is generated.

The count clock of TM5n can be selected with bits 0 to 2 (TCL5n0 to TCL5n2) of timer clock selection register 5n (TCL5n).

Setting

<1> Set the registers.
- TCL5n: Select the count clock.
- CR5n: Compare value
- TMC5n: Stop the count operation, select the mode in which clear & start occurs on a match of TM5n and CR5n.
  (TMC5n = 0000×××0B × = Don't care)

<2> After TCE5n = 1 is set, the count operation starts.

<3> If the values of TM5n and CR5n match, INTTM5n is generated (TM5n is cleared to 00H).

<4> INTTM5n is generated repeatedly at the same interval.
Set TCE5n to 0 to stop the count operation.

Caution Do not write other values to CR5n during operation.

Remarks 1. For how to enable the INTTM5n signal interrupt, see **CHAPTER 20 INTERRUPT FUNCTIONS**.

2. n = 0, 1

Figure 8-11. Interval Timer Operation Timing (1/2)

(a) Basic operation

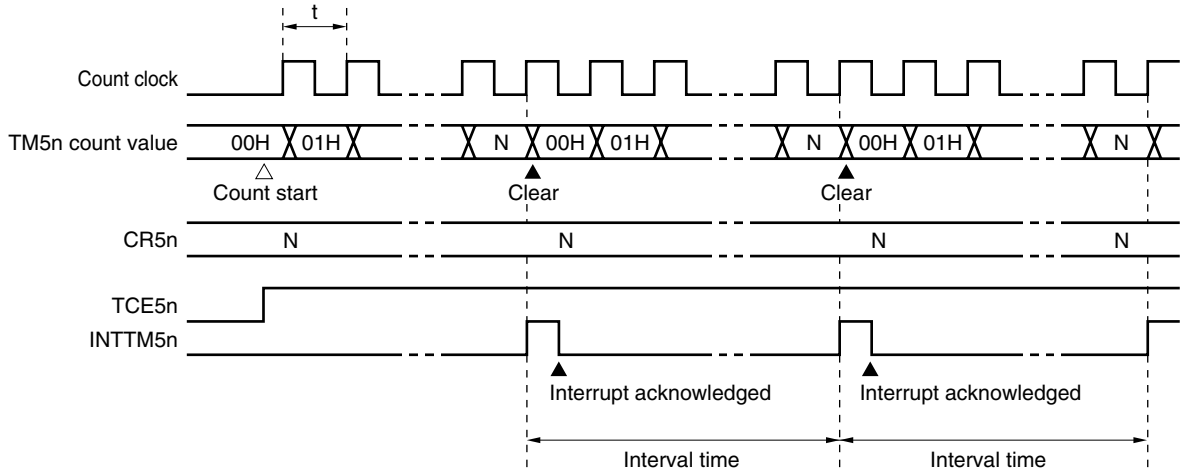

Remark Interval time = (N + 1) × t
N = 01H to FFH
n = 0, 1

Figure 8-11. Interval Timer Operation Timing (2/2)

(b) When CR5n = 00H

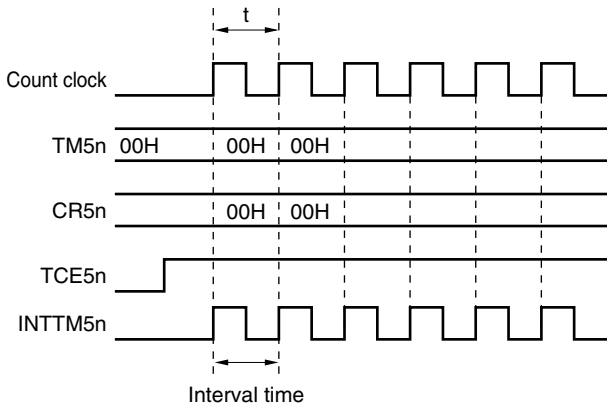

(c) When CR5n = FFH

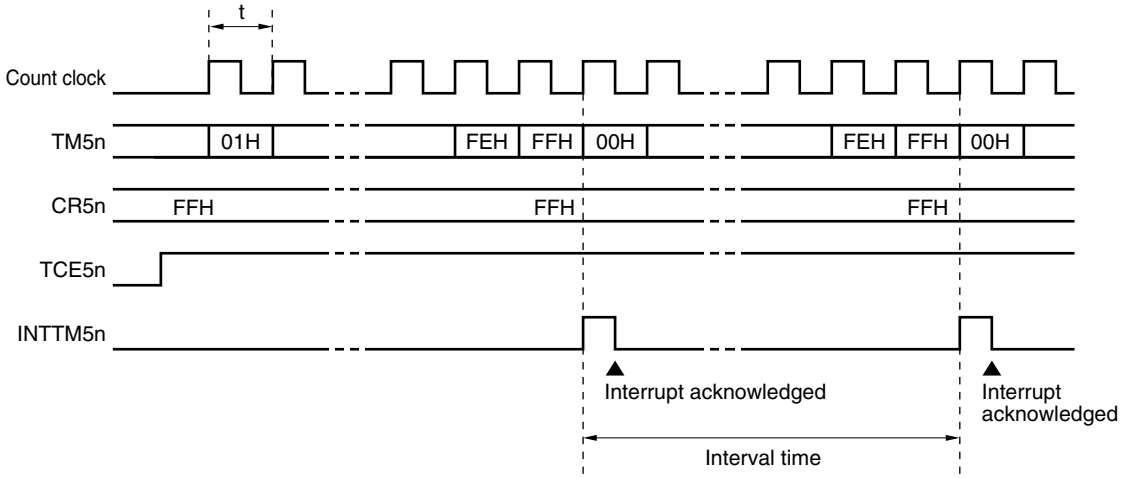

Remark n = 0, 1

8.4.2 Operation as external event counter

The external event counter counts the number of external clock pulses to be input to the TI5n pin by 8-bit timer counter 5n (TM5n).

TM5n is incremented each time the valid edge specified by timer clock selection register 5n (TCL5n) is input. Either the rising or falling edge can be selected.

When the TM5n count value matches the value of 8-bit timer compare register 5n (CR5n), TM5n is cleared to 0 and an interrupt request signal (INTTM5n) is generated.

Whenever the TM5n value matches the value of CR5n, INTTM5n is generated.

Setting

<1> Set each register.

- Set the port mode register (PM17 or PM33)[Note] to 1.
- TCL5n: Select TI5n pin input edge.
  TI5n pin falling edge → TCL5n = 00H
  TI5n pin rising edge → TCL5n = 01H
- CR5n: Compare value
- TMC5n: Stop the count operation, select the mode in which clear & start occurs on match of TM5n and CR5n, disable the timer F/F inversion operation, disable timer output.
  (TMC5n = 00000000B)

<2> When TCE5n = 1 is set, the number of pulses input from the TI5n pin is counted.

<3> When the values of TM5n and CR5n match, INTTM5n is generated (TM5n is cleared to 00H).

<4> After these settings, INTTM5n is generated each time the values of TM5n and CR5n match.

Note 8-bit timer/event counter 50: PM17
8-bit timer/event counter 51: PM33

Remark For how to enable the INTTM5n signal interrupt, see **CHAPTER 20 INTERRUPT FUNCTIONS**.

Figure 8-12. External Event Counter Operation Timing (with Rising Edge Specified)

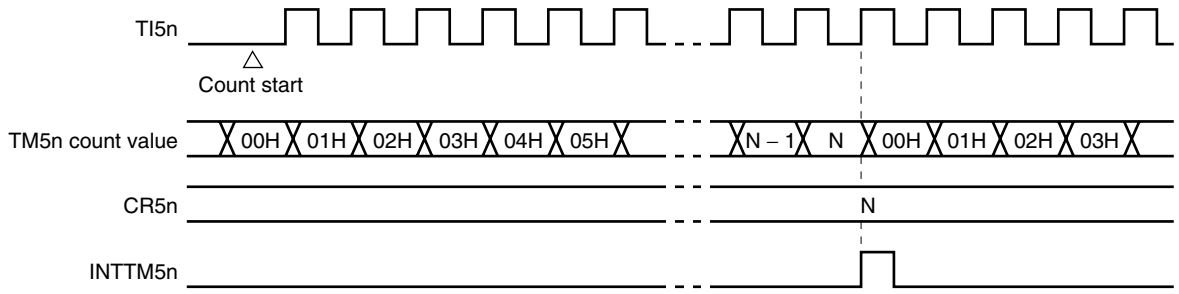

Remark N = 00H to FFH
n = 0, 1

8.4.3 Square-wave output operation

A square wave with any selected frequency is output at intervals determined by the value preset to 8-bit timer compare register 5n (CR5n).

The TO5n pin output status is inverted at intervals determined by the count value preset to CR5n by setting bit 0 (TOE5n) of 8-bit timer mode control register 5n (TMC5n) to 1. This enables a square wave with any selected frequency to be output (duty = 50%).

Setting

<1> Set each register.

- Clear the port output latch (P17 or P33)[Note] and port mode register (PM17 or PM33)[Note] to 0.
- TCL5n: Select the count clock.
- CR5n: Compare value
- TMC5n: Stop the count operation, select the mode in which clear & start occurs on a match of TM5n and CR5n.

LVS5n	LVR5n	Timer Output F/F Status Setting
0	1	Timer output F/F clear (0) (default value of TO5n output: low level)
1	0	Timer output F/F set (1) (default value of TO5n output: high level)

Timer output enabled
(TMC5n = 00001011B or 00000111B)

<2> After TCE5n = 1 is set, the count operation starts.

<3> The timer output F/F is inverted by a match of TM5n and CR5n. After INTTM5n is generated, TM5n is cleared to 00H.

<4> After these settings, the timer output F/F is inverted at the same interval and a square wave is output from TO5n. The frequency is as follows.

- Frequency = 1/2t (N + 1)
  (N: 00H to FFH)

Note 8-bit timer/event counter 50: P17, PM17
8-bit timer/event counter 51: P33, PM33

Caution Do not write other values to CR5n during operation.

Remarks 1. For how to enable the INTTM5n signal interrupt, see **CHAPTER 20 INTERRUPT FUNCTIONS**.
2. n = 0, 1

Figure 8-13. Square-Wave Output Operation Timing

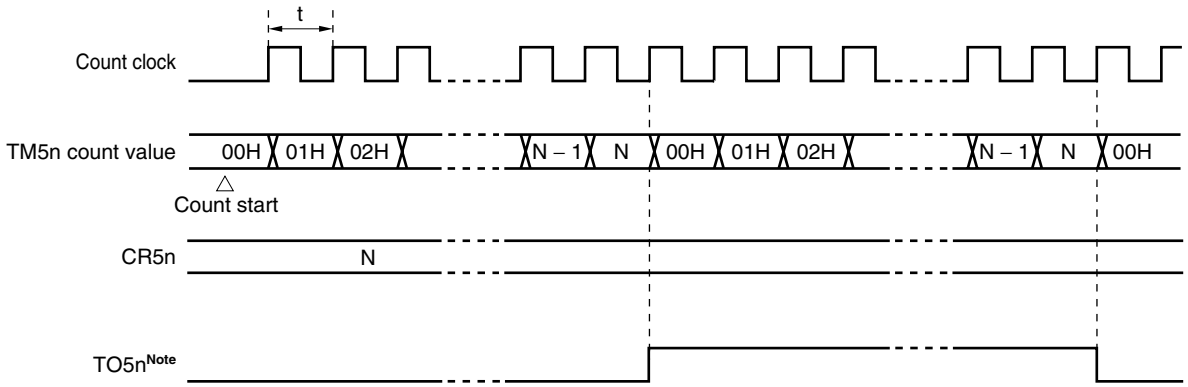

Note The initial value of TO5n output can be set by bits 2 and 3 (LVR5n, LVS5n) of 8-bit timer mode control register 5n (TMC5n).

8.4.4 PWM output operation

8-bit timer/event counter 5n operates as a PWM output when bit 6 (TMC5n6) of 8-bit timer mode control register 5n (TMC5n) is set to 1.

The duty pulse determined by the value set to 8-bit timer compare register 5n (CR5n) is output from TO5n.

Set the active level width of the PWM pulse to CR5n; the active level can be selected with bit 1 (TMC5n1) of TMC5n.

The count clock can be selected with bits 0 to 2 (TCL5n0 to TCL5n2) of timer clock selection register 5n (TCL5n).

PWM output can be enabled/disabled with bit 0 (TOE5n) of TMC5n.

Caution In PWM mode, make the CR5n rewrite period 3 count clocks of the count clock (clock selected by TCL5n) or more.

Remark n = 0, 1

(1) PWM output basic operation

Setting

<1> Set each register.

- Clear the port output latch (P17 or P33)[Note] and port mode register (PM17 or PM33)[Note] to 0.
- TCL5n: Select the count clock.
- CR5n: Compare value
- TMC5n: Stop the count operation, select PWM mode.
  The timer output F/F is not changed.

TMC5n1	Active Level Selection
0	Active-high
1	Active-low

Timer output enabled
(TMC5n = 01000001B or 01000011B)

<2> The count operation starts when TCE5n = 1.
Clear TCE5n to 0 to stop the count operation.

Note 8-bit timer/event counter 50: P17, PM17
8-bit timer/event counter 51: P33, PM33

PWM output operation

<1> PWM output (TO5n output) outputs an inactive level until an overflow occurs.

<2> When an overflow occurs, the active level is output. The active level is output until CR5n matches the count value of 8-bit timer counter 5n (TM5n).

<3> After the CR5n matches the count value, the inactive level is output until an overflow occurs again.

<4> Operations <2> and <3> are repeated until the count operation stops.

<5> When the count operation is stopped with TCE5n = 0, PWM output becomes inactive.
For details of timing, see **Figures 8-14** and **8-15**.
The cycle, active-level width, and duty are as follows.

- Cycle = 2^8t
- Active-level width = Nt
- Duty = N/2^8
  (N = 00H to FFH)

Remark n = 0, 1

Figure 8-14. PWM Output Operation Timing

(a) Basic operation (active level = H)

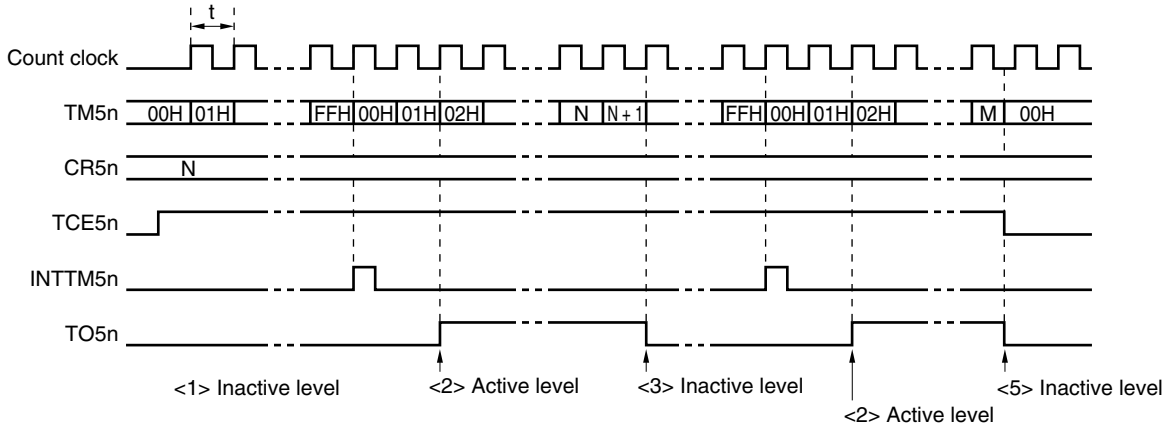

(b) CR5n = 00H

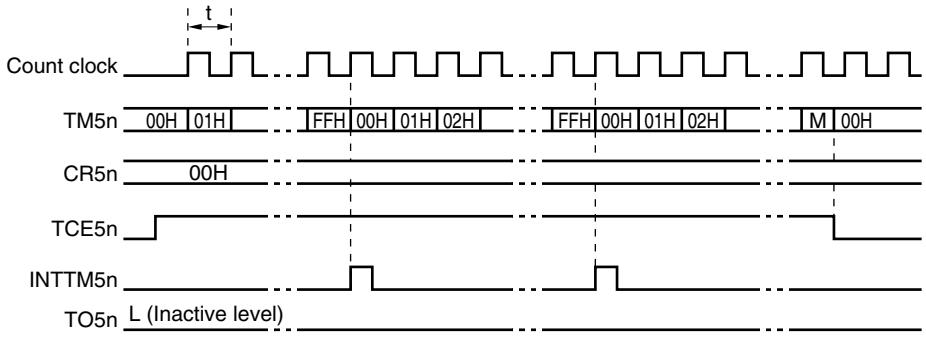

(c) CR5n = FFH

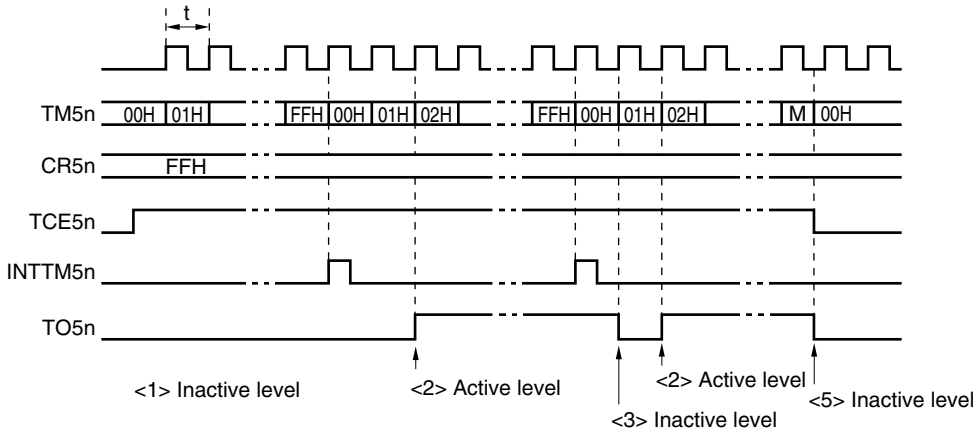

Remarks 1. <1> to <3> and <5> in Figure 8-14 (a) and (c) correspond to <1> to <3> and <5> in PWM output operation in **8.4.4 (1) PWM output basic operation**.

2. n = 0, 1

(2) Operation with CR5n changed

Figure 8-15. Timing of Operation with CR5n Changed

(a) CR5n value is changed from N to M before clock rising edge of FFH
→ Value is transferred to CR5n at overflow immediately after change.

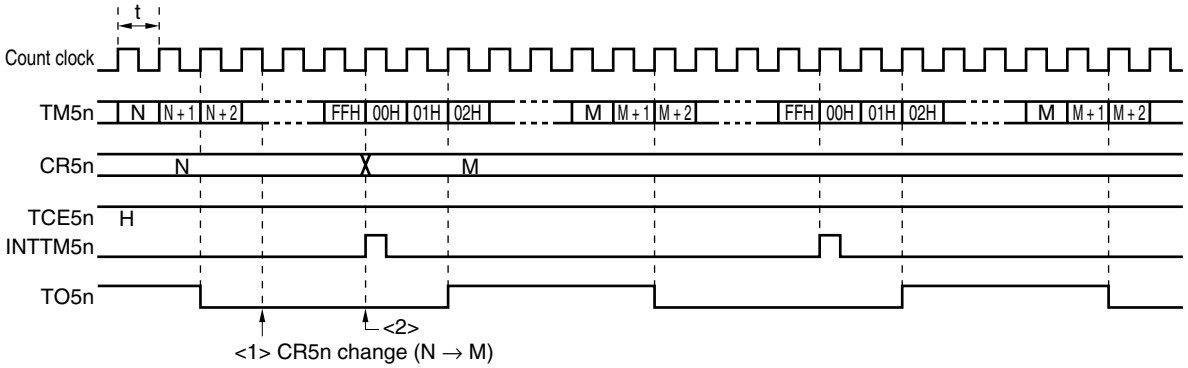

(b) CR5n value is changed from N to M after clock rising edge of FFH
→ Value is transferred to CR5n at second overflow.

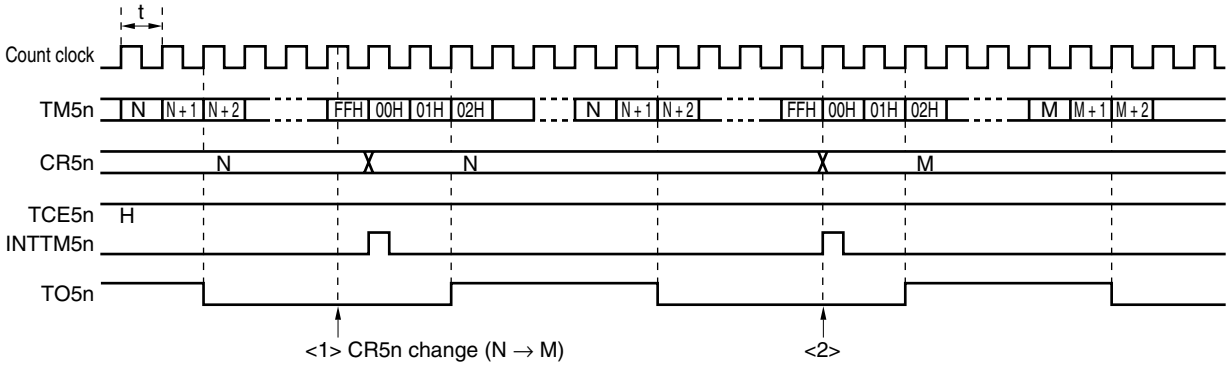

Caution When reading from CR5n between <1> and <2> in Figure 8-15, the value read differs from the actual value (read value: M, actual value of CR5n: N).

8.5 Cautions for 8-Bit Timer/Event Counters 50 and 51

(1) Timer start error

An error of up to one clock may occur in the time required for a match signal to be generated after timer start. This is because 8-bit timer counters 50 and 51 (TM50, TM51) are started asynchronously to the count clock.

Figure 8-16. 8-Bit Timer Counter 5n (TM5n) Start Timing

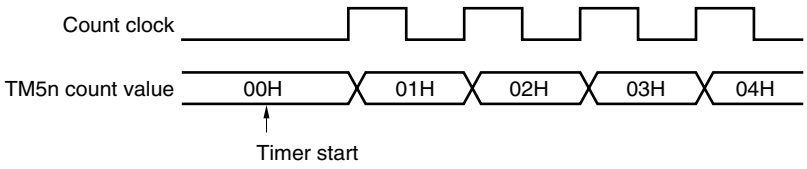

(2) Reading of 8-bit timer counter 5n (TM5n)

TM5n can be read without stopping the actual counter, because the count values captured to the buffer are fixed when it is read. The buffer, however, may not be updated when it is read immediately before the counter counts up, because the buffer is updated at the timing the counter counts up.

Figure 8-17. 8-bit Timer Counter 5n (TM5n) Read Timing

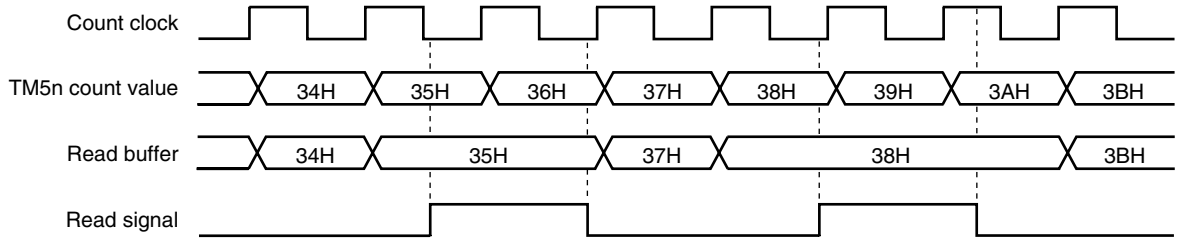

Remark n = 0, 1

CHAPTER 9 8-BIT TIMERS H0 AND H1

9.1 Functions of 8-Bit Timers H0 and H1

8-bit timers H0 and H1 are mounted onto all 78K0/Kx2 microcontroller products.
8-bit timers H0 and H1 have the following functions.

- Interval timer
- Square-wave output
- PWM output
- Carrier generator (8-bit timer H1 only)

9.2 Configuration of 8-Bit Timers H0 and H1

8-bit timers H0 and H1 include the following hardware.

Table 9-1. Configuration of 8-Bit Timers H0 and H1

Item	Configuration
Timer register	8-bit timer counter Hn
Registers	8-bit timer H compare register 0n (CMP0n) 8-bit timer H compare register 1n (CMP1n)
Timer output	TOHn, output controller
Control registers	8-bit timer H mode register n (TMHMDn) 8-bit timer H carrier control register 1 (TMCYC1)Note Port mode register 1 (PM1) Port register 1 (P1)

Note 8-bit timer H1 only

Remark n = 0, 1

Figures 9-1 and 9-2 show the block diagrams.

Figure 9-1. Block Diagram of 8-Bit Timer H0

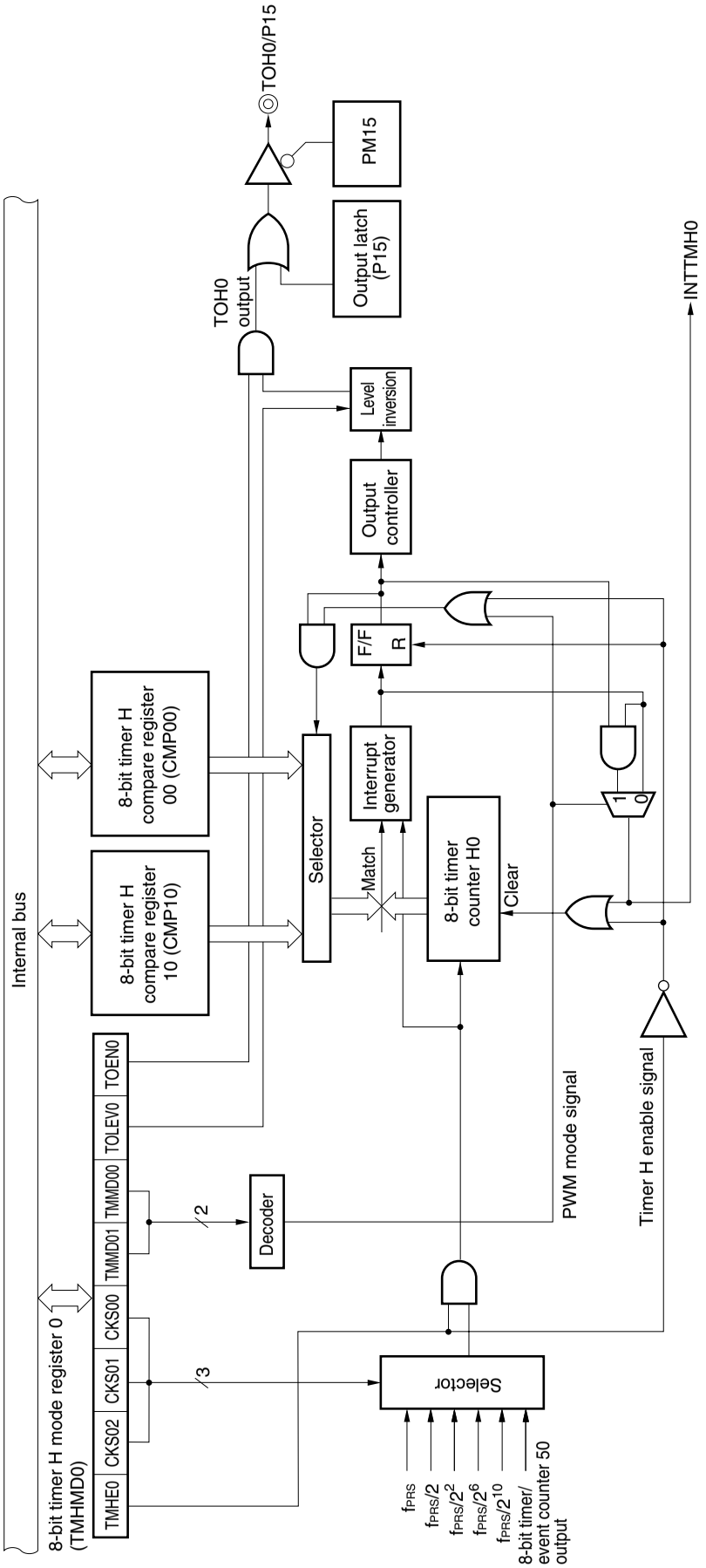

Figure 9-2. Block Diagram of 8-Bit Timer H1

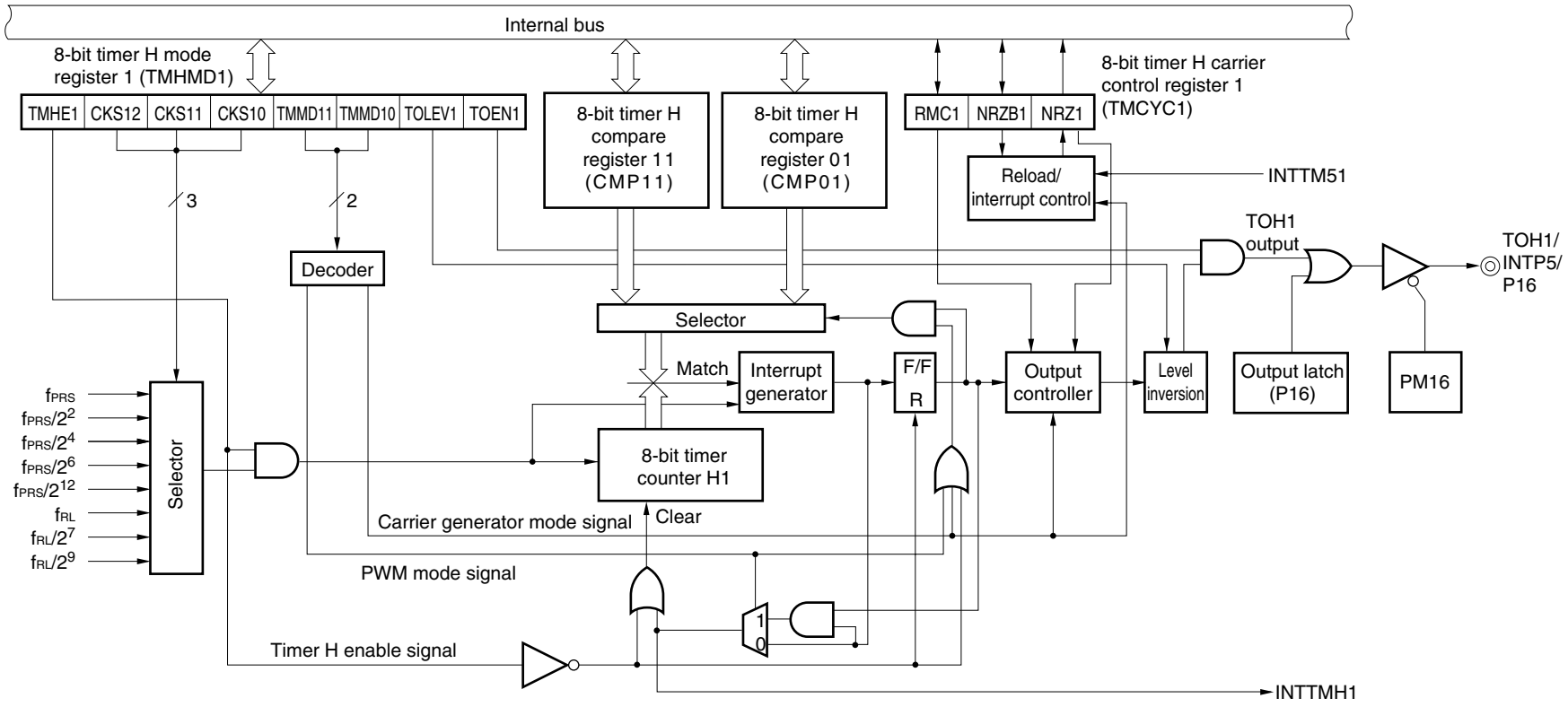

(1) 8-bit timer H compare register 0n (CMP0n)

This register can be read or written by an 8-bit memory manipulation instruction. This register is used in all of the timer operation modes.

This register constantly compares the value set to CMP0n with the count value of the 8-bit timer counter Hn and, when the two values match, generates an interrupt request signal (INTTMHn) and inverts the output level of TOHn.

Rewrite the value of CMP0n while the timer is stopped (TMHEn = 0).

A reset signal generation clears this register to 00H.

Figure 9-3. Format of 8-Bit Timer H Compare Register 0n (CMP0n)

Address: FF18H (CMP00), FF1AH (CMP01) After reset: 00H R/W

Symbol	7	6	5	4	3	2	1	0
CMP0n (n = 0, 1)								

Caution CMP0n cannot be rewritten during timer count operation. CMP0n can be refreshed (the same value is written) during timer count operation.

(2) 8-bit timer H compare register 1n (CMP1n)

This register can be read or written by an 8-bit memory manipulation instruction. This register is used in the PWM output mode and carrier generator mode.

In the PWM output mode, this register constantly compares the value set to CMP1n with the count value of the 8-bit timer counter Hn and, when the two values match, inverts the output level of TOHn. No interrupt request signal is generated.

In the carrier generator mode, the CMP1n register always compares the value set to CMP1n with the count value of the 8-bit timer counter Hn and, when the two values match, generates an interrupt request signal (INTTMHn). At the same time, the count value is cleared.

CMP1n can be refreshed (the same value is written) and rewritten during timer count operation.

If the value of CMP1n is rewritten while the timer is operating, the new value is latched and transferred to CMP1n when the count value of the timer matches the old value of CMP1n, and then the value of CMP1n is changed to the new value. If matching of the count value and the CMP1n value and writing a value to CMP1n conflict, the value of CMP1n is not changed.

A reset signal generation clears this register to 00H.

Figure 9-4. Format of 8-Bit Timer H Compare Register 1n (CMP1n)

Address: FF19H (CMP10), FF1BH (CMP11) After reset: 00H R/W

Symbol	7	6	5	4	3	2	1	0
CMP1n (n = 0, 1)								

Caution In the PWM output mode and carrier generator mode, be sure to set CMP1n when starting the timer count operation (TMHEn = 1) after the timer count operation was stopped (TMHEn = 0) (be sure to set again even if setting the same value to CMP1n).

Remark n = 0, 1

9.3 Registers Controlling 8-Bit Timers H0 and H1

The following four registers are used to control 8-bit timers H0 and H1.

- 8-bit timer H mode register n (TMHMDn)
- 8-bit timer H carrier control register 1 (TMCYC1)[Note]
- Port mode register 1 (PM1)
- Port register 1 (P1)

Note 8-bit timer H1 only

(1) 8-bit timer H mode register n (TMHMDn)

This register controls the mode of timer H.

This register can be set by a 1-bit or 8-bit memory manipulation instruction.

Reset signal generation clears this register to 00H.

Remark n = 0, 1

Figure 9-5. Format of 8-Bit Timer H Mode Register 0 (TMHMD0)

Address: FF69H After reset: 00H R/W

	<7>	6	5	4	3	2	<1>	<0>
TMHMD0	TMHE0	CKS02	CKS01	CKS00	TMMD01	TMMD00	TOLEV0	TOEN0

TMHE0	Timer operation enable
0	Stops timer count operation (counter is cleared to 0)
1	Enables timer count operation (count operation started by inputting clock)

CKS02	CKS01	CKS00	Count clock selection[Note 1]				
				f_{PRS} = 2 MHz	f_{PRS} = 5 MHz	f_{PRS} = 10 MHz	f_{PRS} = 20 MHz
0	0	0	f_{PRS}[Note 2]	2 MHz	5 MHz	10 MHz	20 MHz[Note 3]
0	0	1	$f_{PRS}/2$	1 MHz	2.5 MHz	5 MHz	10 MHz
0	1	0	$f_{PRS}/2^2$	500 kHz	1.25 MHz	2.5 MHz	5 MHz
0	1	1	$f_{PRS}/2^6$	31.25 kHz	78.13 kHz	156.25 kHz	312.5 kHz
1	0	0	$f_{PRS}/2^{10}$	1.95 kHz	4.88 kHz	9.77 kHz	19.54 kHz
1	0	1	TM50 output[Note 4]				
Other than above			Setting prohibited				

TMMD01	TMMD00	Timer operation mode
0	0	Interval timer mode
1	0	PWM output mode
Other than above		Setting prohibited

TOLEV0	Timer output level control (in default mode)
0	Low level
1	High level

TOEN0	Timer output control
0	Disables output
1	Enables output

Notes 1. The frequency that can be used for the peripheral hardware clock (f_{PRS}) differs depending on the power supply voltage and product specifications.

Supply Voltage	Conventional-specification Products (μPD78F05xx and 78F05xxD)	Expanded-specification Products (μPD78F05xxA and 78F05xxDA)
4.0 V ≤ V_{DD} ≤ 5.5 V	f_{PRS} ≤ 20 MHz	f_{PRS} ≤ 20 MHz
2.7 V ≤ V_{DD} < 4.0 V	f_{PRS} ≤ 10 MHz	
1.8 V ≤ V_{DD} < 2.7 V (Standard products and (A) grade products only)	f_{PRS} ≤ 5 MHz	f_{PRS} ≤ 5 MHz

(The values shown in the table above are those when $f_{PRS} = f_{XH}$ (XSEL = 1).)

Notes 2. If the peripheral hardware clock (f_{PRS}) operates on the internal high-speed oscillation clock (f_{RH}) (XSEL = 0), when 1.8 V ≤ V_{DD} < 2.7 V, the setting of CKS02 = CKS01 = CKS00 = 0 (count clock: f_{PRS}) is prohibited.

3. This is settable only if 4.0 V ≤ V_{DD} ≤ 5.5 V.

4. Note the following points when selecting the TM50 output as the count clock.

- Mode in which the count clock is cleared and started upon a match of TM50 and CR50 (TMC506 = 0)
  Start the operation of 8-bit timer/event counter 50 first and then enable the timer F/F inversion operation (TMC501 = 1).
- PWM mode (TMC506 = 1)
  Start the operation of 8-bit timer/event counter 50 first and then set the count clock to make the duty = 50%.

It is not necessary to enable (TOE50 = 1) TO50 output in any mode.

Cautions 1. When TMHE0 = 1, setting the other bits of TMHMD0 is prohibited. However, TMHMD0 can be refreshed (the same value is written).

2. In the PWM output mode, be sure to set the 8-bit timer H compare register 10 (CMP10) when starting the timer count operation (TMHE0 = 1) after the timer count operation was stopped (TMHE0 = 0) (be sure to set again even if setting the same value to CMP10).

3. The actual TOH0/P15 pin output is determined depending on PM15 and P15, besides TOH0 output.

Remarks 1. f_{PRS}: Peripheral hardware clock frequency

2. TMC506: Bit 6 of 8-bit timer mode control register 50 (TMC50)
TMC501: Bit 1 of TMC50

Figure 9-6. Format of 8-Bit Timer H Mode Register 1 (TMHMD1)

Address: FF6CH After reset: 00H R/W

	<7>	6	5	4	3	2	<1>	<0>
TMHMD1	TMHE1	CKS12	CKS11	CKS10	TMMD11	TMMD10	TOLEV1	TOEN1

TMHE1	Timer operation enable
0	Stops timer count operation (counter is cleared to 0)
1	Enables timer count operation (count operation started by inputting clock)

CKS12	CKS11	CKS10	Count clock selection[Note 1]				
				f_{PRS} = 2 MHz	f_{PRS} = 5 MHz	f_{PRS} = 10 MHz	f_{PRS} = 20 MHz
0	0	0	f_{PRS}[Note 2]	2 MHz	5 MHz	10 MHz	20 MHz[Note 3]
0	0	1	$f_{PRS}/2^2$	500 kHz	1.25 MHz	2.5 MHz	5 MHz
0	1	0	$f_{PRS}/2^4$	125 kHz	312.5 kHz	625 kHz	1.25 MHz
0	1	1	$f_{PRS}/2^6$	31.25 kHz	78.13 kHz	156.25 kHz	312.5 kHz
1	0	0	$f_{PRS}/2^{12}$	0.49 kHz	1.22 kHz	2.44 kHz	4.88 kHz
1	0	1	$f_{RL}/2^7$	1.88 kHz (TYP.)			
1	1	0	$f_{RL}/2^9$	0.47 kHz (TYP.)			
1	1	1	f_{RL}	240 kHz (TYP.)			

TMMD11	TMMD10	Timer operation mode
0	0	Interval timer mode
0	1	Carrier generator mode
1	0	PWM output mode
1	1	Setting prohibited

TOLEV1	Timer output level control (in default mode)
0	Low level
1	High level

TOEN1	Timer output control
0	Disables output
1	Enables output

Notes 1. The frequency that can be used for the peripheral hardware clock (f_{PRS}) differs depending on the power supply voltage and product specifications.

Supply Voltage	Conventional-specification Products (μPD78F05xx and 78F05xxD)	Expanded-specification Products (μPD78F05xxA and 78F05xxDA)
4.0 V ≤ V_{DD} ≤ 5.5 V	f_{PRS} ≤ 20 MHz	f_{PRS} ≤ 20 MHz
2.7 V ≤ V_{DD} < 4.0 V	f_{PRS} ≤ 10 MHz	
1.8 V ≤ V_{DD} < 2.7 V (Standard products and (A) grade products only)	f_{PRS} ≤ 5 MHz	f_{PRS} ≤ 5 MHz

(The values shown in the table above are those when f_{PRS} = f_{XH} (XSEL = 1).)

Notes 2. If the peripheral hardware clock (f_{PRS}) operates on the internal high-speed oscillation clock (f_{RH}) (XSEL = 0), when 1.8 V ≤ V_{DD} < 2.7 V, the setting of CKS12 = CKS11 = CKS10 = 0 (count clock: f_{PRS}) is prohibited.

3. This is settable only if 4.0 V ≤ V_{DD} ≤ 5.5 V.

Cautions 1. When TMHE1 = 1, setting the other bits of TMHMD1 is prohibited. However, TMHMD1 can be refreshed (the same value is written).

2. In the PWM output mode and carrier generator mode, be sure to set the 8-bit timer H compare register 11 (CMP11) when starting the timer count operation (TMHE1 = 1) after the timer count operation was stopped (TMHE1 = 0) (be sure to set again even if setting the same value to CMP11).

3. When the carrier generator mode is used, set so that the count clock frequency of TMH1 becomes more than 6 times the count clock frequency of TM51.

4. The actual TOH1/INTP5/P16 pin output is determined depending on PM16 and P16, besides TOH1 output.

Remarks 1. f_{PRS}: Peripheral hardware clock frequency

2. f_{RL}: Internal low-speed oscillation clock frequency

(2) 8-bit timer H carrier control register 1 (TMCYC1)

This register controls the remote control output and carrier pulse output status of 8-bit timer H1.

This register can be set by a 1-bit or 8-bit memory manipulation instruction.

Reset signal generation clears this register to 00H.

Figure 9-7. Format of 8-Bit Timer H Carrier Control Register 1 (TMCYC1)

Address: FF6DH After reset: 00H R/W[Note]

	7	6	5	4	3	2	1	<0>
TMCYC1	0	0	0	0	0	RMC1	NRZB1	NRZ1

RMC1	NRZB1	Remote control output
0	0	Low-level output
0	1	High-level output at rising edge of INTTM51 signal input
1	0	Low-level output
1	1	Carrier pulse output at rising edge of INTTM51 signal input

NRZ1	Carrier pulse output status flag
0	Carrier output disabled status (low-level status)
1	Carrier output enabled status (RMC1 = 1: Carrier pulse output, RMC1 = 0: High-level status)

Note Bit 0 is read-only.

Caution Do not rewrite RMC1 when TMHE = 1. However, TMCYC1 can be refreshed (the same value is written).

(3) Port mode register 1 (PM1)

This register sets port 1 input/output in 1-bit units.

When using the P15/TOH0 and P16/TOH1/INTP5 pins for timer output, clear PM15 and PM16 and the output latches of P15 and P16 to 0.

PM1 can be set by a 1-bit or 8-bit memory manipulation instruction.

Reset signal generation sets this register to FFH.

Figure 9-8. Format of Port Mode Register 1 (PM1)

Address: FF21H After reset: FFH R/W

Symbol	7	6	5	4	3	2	1	0
PM1	PM17	PM16	PM15	PM14	PM13	PM12	PM11	PM10

PM1n	P1n pin I/O mode selection (n = 0 to 7)
0	Output mode (output buffer on)
1	Input mode (output buffer off)

9.4 Operation of 8-Bit Timers H0 and H1

9.4.1 Operation as interval timer/square-wave output

When the 8-bit timer counter Hn and compare register 0n (CMP0n) match, an interrupt request signal (INTTMHn) is generated and the 8-bit timer counter Hn is cleared to 00H.

Compare register 1n (CMP1n) is not used in interval timer mode. Since a match of the 8-bit timer counter Hn and the CMP1n register is not detected even if the CMP1n register is set, timer output is not affected.

By setting bit 0 (TOENn) of timer H mode register n (TMHMDn) to 1, a square wave of any frequency (duty = 50%) is output from TOHn.

Setting

<1> Set each register.

Figure 9-9. Register Setting During Interval Timer/Square-Wave Output Operation

(i) Setting timer H mode register n (TMHMDn)

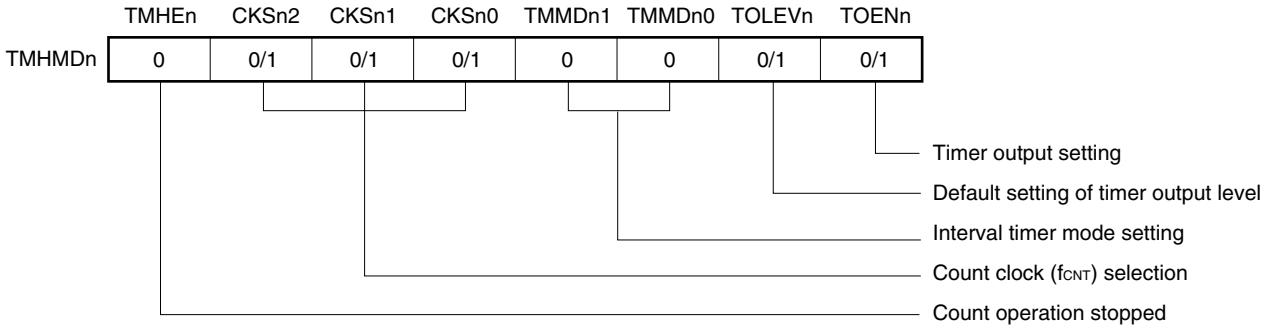

(ii) CMP0n register setting

The interval time is as follows if N is set as a comparison value.

- Interval time = (N +1)/f_{CNT}

<2> Count operation starts when TMHEn = 1.

<3> When the values of the 8-bit timer counter Hn and the CMP0n register match, the INTTMHn signal is generated and the 8-bit timer counter Hn is cleared to 00H.

<4> Subsequently, the INTTMHn signal is generated at the same interval. To stop the count operation, clear TMHEn to 0.

Remarks 1. For the setting of the output pin, see **9.3 (3) Port mode register 1 (PM1)**.

2. For how to enable the INTTMHn signal interrupt, see **CHAPTER 20 INTERRUPT FUNCTIONS**.

3. n = 0, 1

Figure 9-10. Timing of Interval Timer/Square-Wave Output Operation (1/2)

(a) Basic operation (Operation When 01H ≤ CMP0n ≤ FEH)

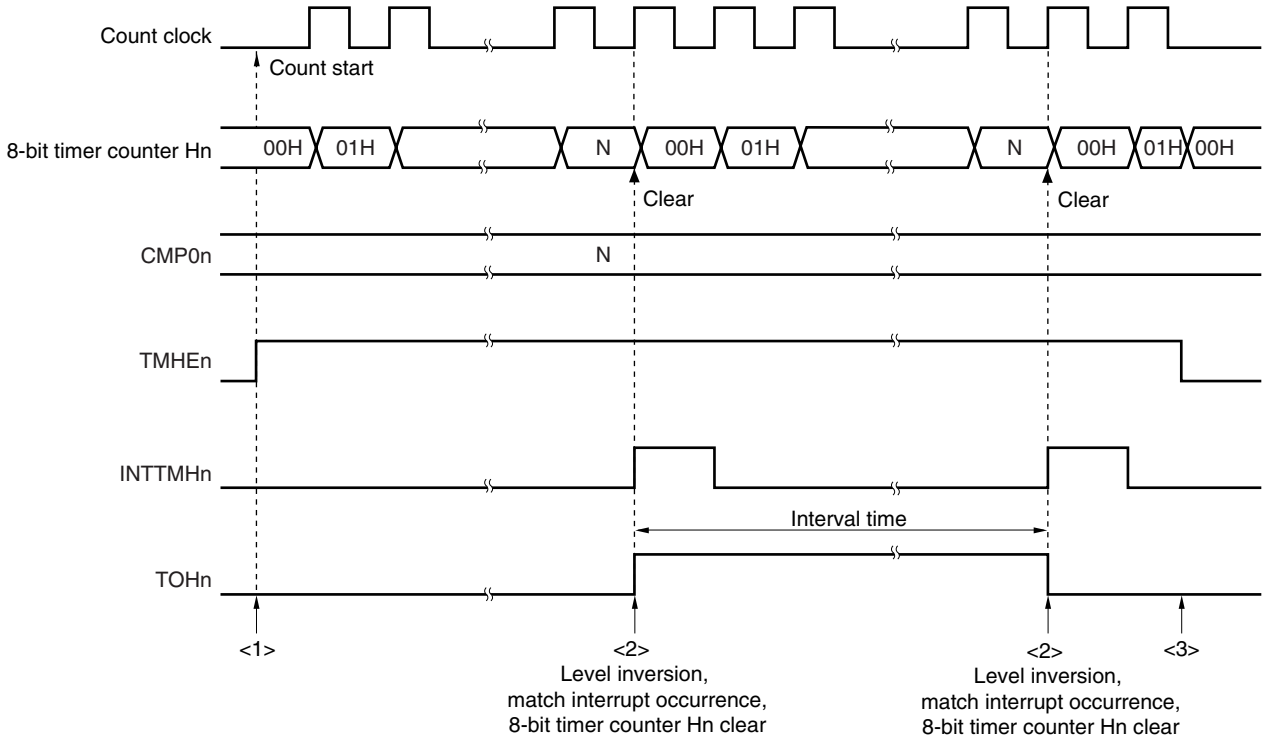

<1> The count operation is enabled by setting the TMHEn bit to 1. The count clock starts counting no more than 1 clock after the operation is enabled.

<2> When the value of the 8-bit timer counter Hn matches the value of the CMP0n register, the value of the timer counter is cleared, and the level of the TOHn output is inverted. In addition, the INTTMHn signal is output at the rising edge of the count clock.

<3> If the TMHEn bit is cleared to 0 while timer H is operating, the INTTMHn signal and TOHn output are set to the default level. If they are already at the default level before the TMHEn bit is cleared to 0, then that level is maintained.

Remark n = 0, 1
01H ≤ N ≤ FEH

Figure 9-10. Timing of Interval Timer/Square-Wave Output Operation (2/2)

(b) Operation when CMP0n = FFH

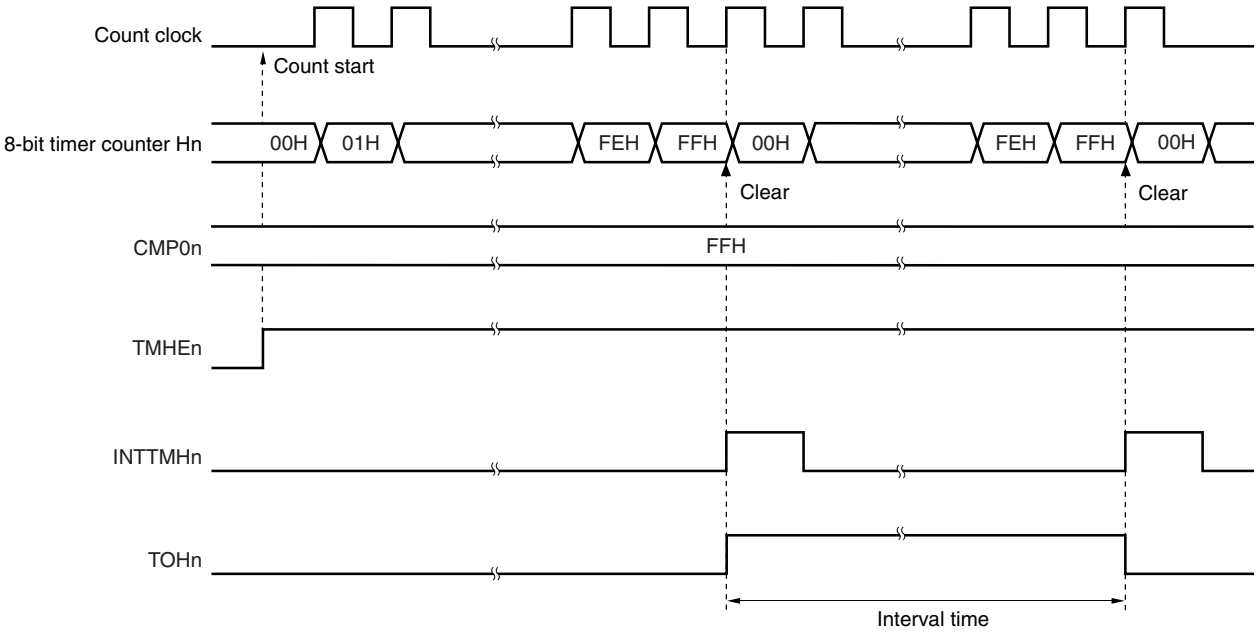

(c) Operation when CMP0n = 00H

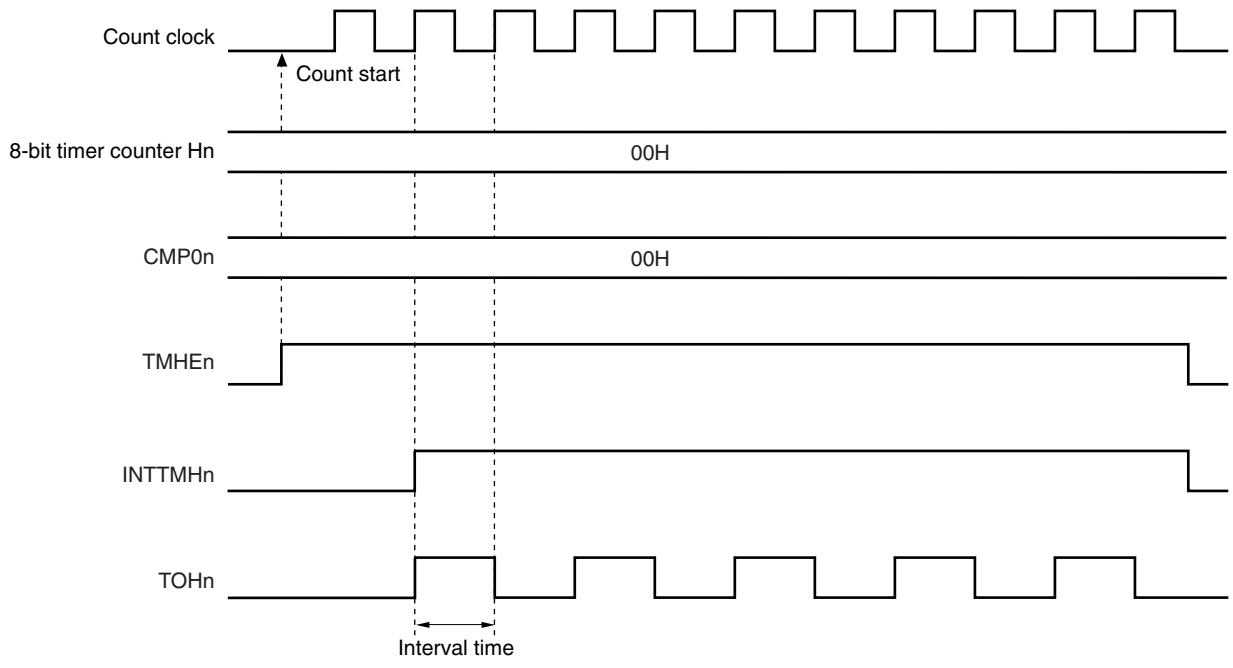

Remark n = 0, 1

9.4.2 Operation as PWM output

In PWM output mode, a pulse with an arbitrary duty and arbitrary cycle can be output.

The 8-bit timer compare register 0n (CMP0n) controls the cycle of timer output (TOHn). Rewriting the CMP0n register during timer operation is prohibited.

The 8-bit timer compare register 1n (CMP1n) controls the duty of timer output (TOHn). Rewriting the CMP1n register during timer operation is possible.

The operation in PWM output mode is as follows.

PWM output (TOHn output) outputs an active level and 8-bit timer counter Hn is cleared to 0 when 8-bit timer counter Hn and the CMP0n register match after the timer count is started. PWM output (TOHn output) outputs an inactive level when 8-bit timer counter Hn and the CMP1n register match.

Setting

<1> Set each register.

Figure 9-11. Register Setting in PWM Output Mode

(i) Setting timer H mode register n (TMHMDn)

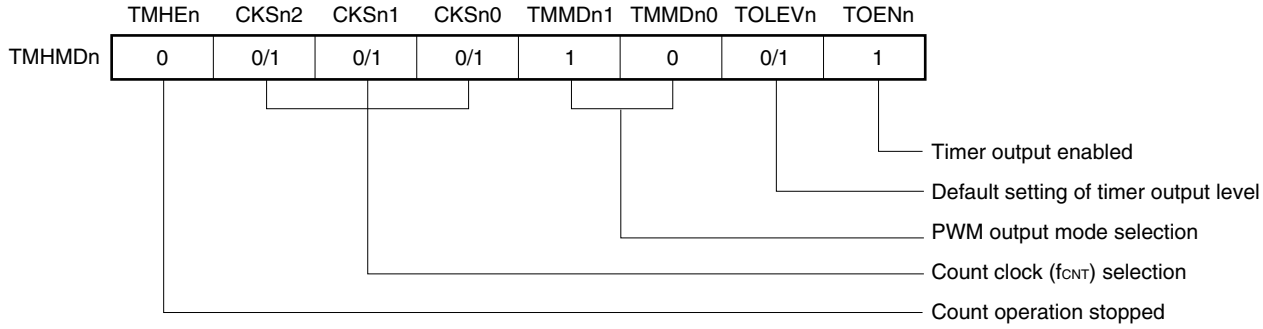

(ii) Setting CMP0n register

- Compare value (N): Cycle setting

(iii) Setting CMP1n register

- Compare value (M): Duty setting

Remarks 1. n = 0, 1

2. 00H ≤ CMP1n (M) < CMP0n (N) ≤ FFH

<2> The count operation starts when TMHEn = 1.

<3> The CMP0n register is the compare register that is to be compared first after counter operation is enabled. When the values of the 8-bit timer counter Hn and the CMP0n register match, the 8-bit timer counter Hn is cleared, an interrupt request signal (INTTMHn) is generated, and an active level is output. At the same time, the compare register to be compared with the 8-bit timer counter Hn is changed from the CMP0n register to the CMP1n register.

<4> When the 8-bit timer counter Hn and the CMP1n register match, an inactive level is output and the compare register to be compared with the 8-bit timer counter Hn is changed from the CMP1n register to the CMP0n register. At this time, the 8-bit timer counter Hn is not cleared and the INTTMHn signal is not generated.

<5> By performing procedures <3> and <4> repeatedly, a pulse with an arbitrary duty can be obtained.

<6> To stop the count operation, set TMHEn = 0.

If the setting value of the CMP0n register is N, the setting value of the CMP1n register is M, and the count clock frequency is f_{CNT}, the PWM pulse output cycle and duty are as follows.

- PWM pulse output cycle = (N + 1)/f_{CNT}
- Duty = (M + 1)/(N + 1)

Cautions 1. The set value of the CMP1n register can be changed while the timer counter is operating. However, this takes a duration of three operating clocks (signal selected by the CKSn2 to CKSn0 bits of the TMHMDn register) from when the value of the CMP1n register is changed until the value is transferred to the register.

2. Be sure to set the CMP1n register when starting the timer count operation (TMHEn = 1) after the timer count operation was stopped (TMHEn = 0) (be sure to set again even if setting the same value to the CMP1n register).

3. Make sure that the CMP1n register setting value (M) and CMP0n register setting value (N) are within the following range.

00H ≤ CMP1n (M) < CMP0n (N) ≤ FFH

Remarks 1. For the setting of the output pin, see **9.3 (3) Port mode register 1 (PM1)**.

2. For details on how to enable the INTTMHn signal interrupt, see **CHAPTER 20 INTERRUPT FUNCTIONS**.

3. n = 0, 1

Figure 9-12. Operation Timing in PWM Output Mode (1/4)

(a) Basic operation

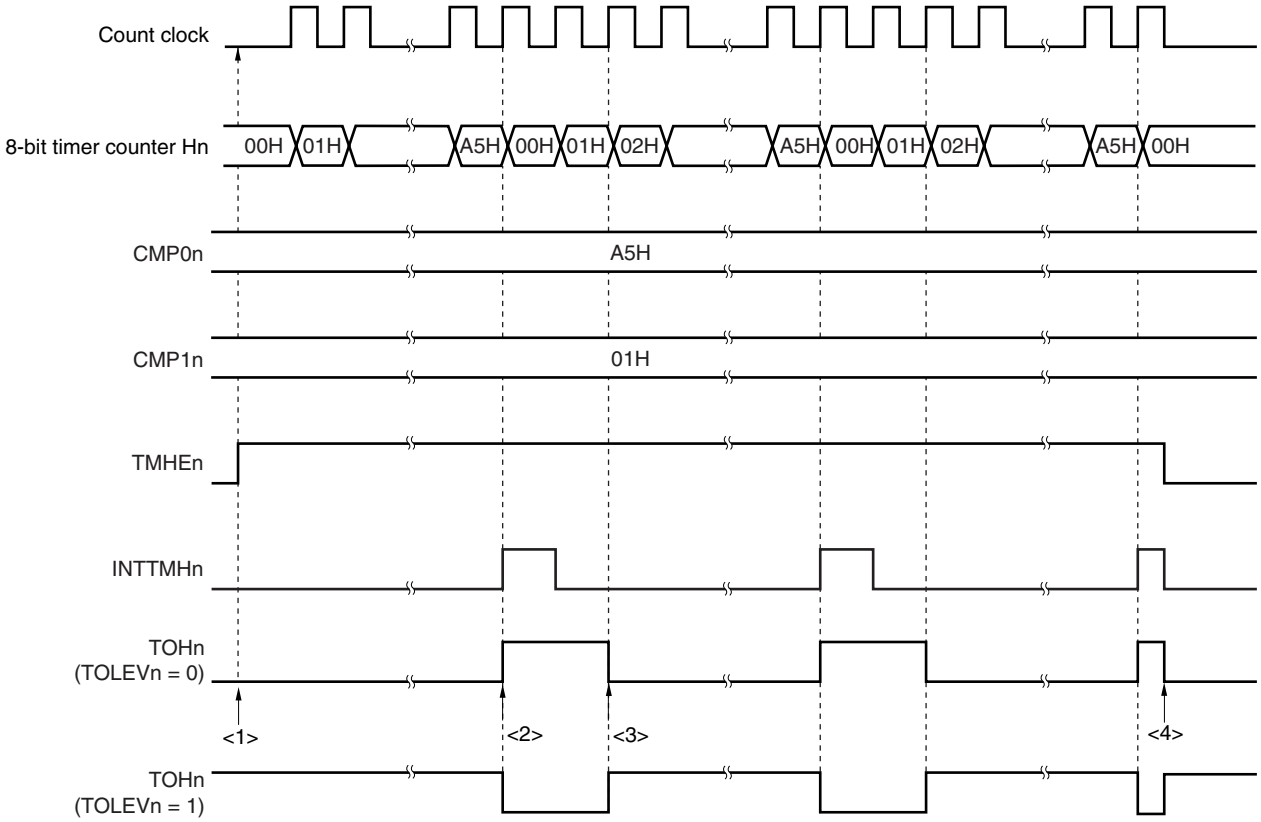

<1> The count operation is enabled by setting the TMHEn bit to 1. Start the 8-bit timer counter Hn by masking one count clock to count up. At this time, PWM output outputs an inactive level.

<2> When the values of the 8-bit timer counter Hn and the CMP0n register match, an active level is output. At this time, the value of the 8-bit timer counter Hn is cleared, and the INTTMHn signal is output.

<3> When the values of the 8-bit timer counter Hn and the CMP1n register match, an inactive level is output. At this time, the 8-bit timer counter value is not cleared and the INTTMHn signal is not output.

<4> Clearing the TMHEn bit to 0 during timer Hn operation sets the INTTMHn signal to the default and PWM output to an inactive level.

Remark n = 0, 1

Figure 9-12. Operation Timing in PWM Output Mode (2/4)

(b) Operation when CMP0n = FFH, CMP1n = 00H

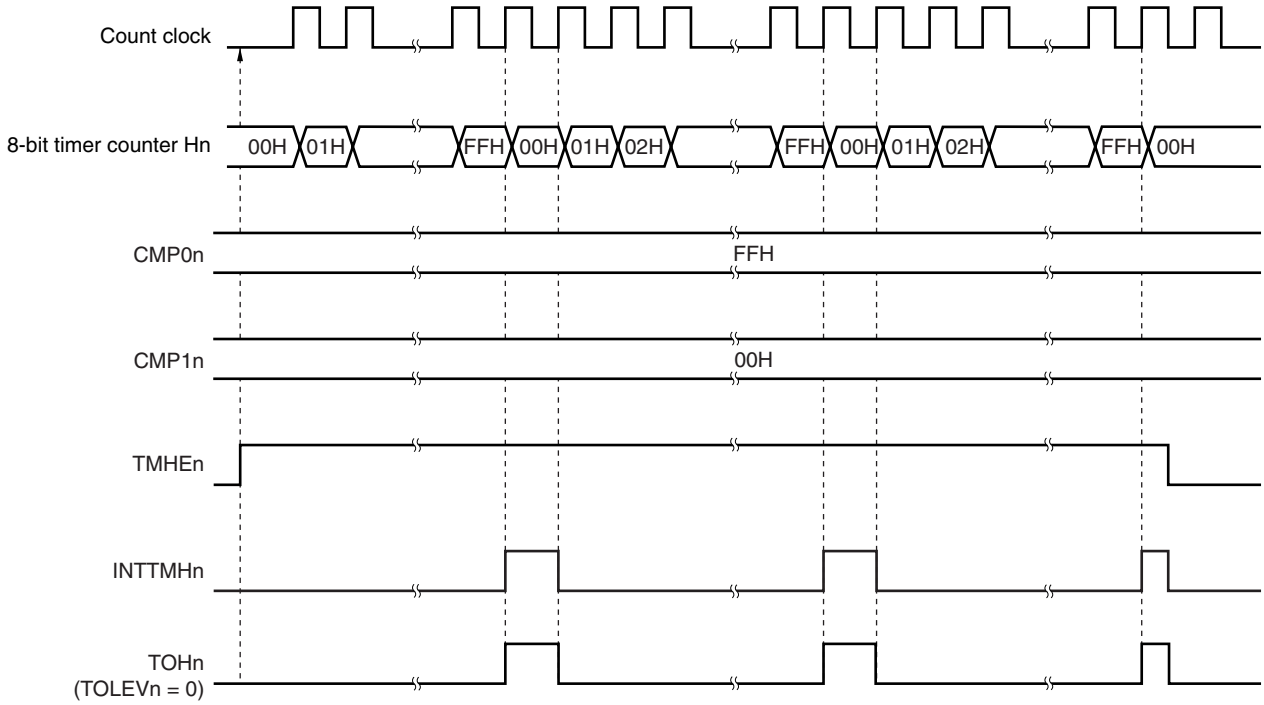

(c) Operation when CMP0n = FFH, CMP1n = FEH

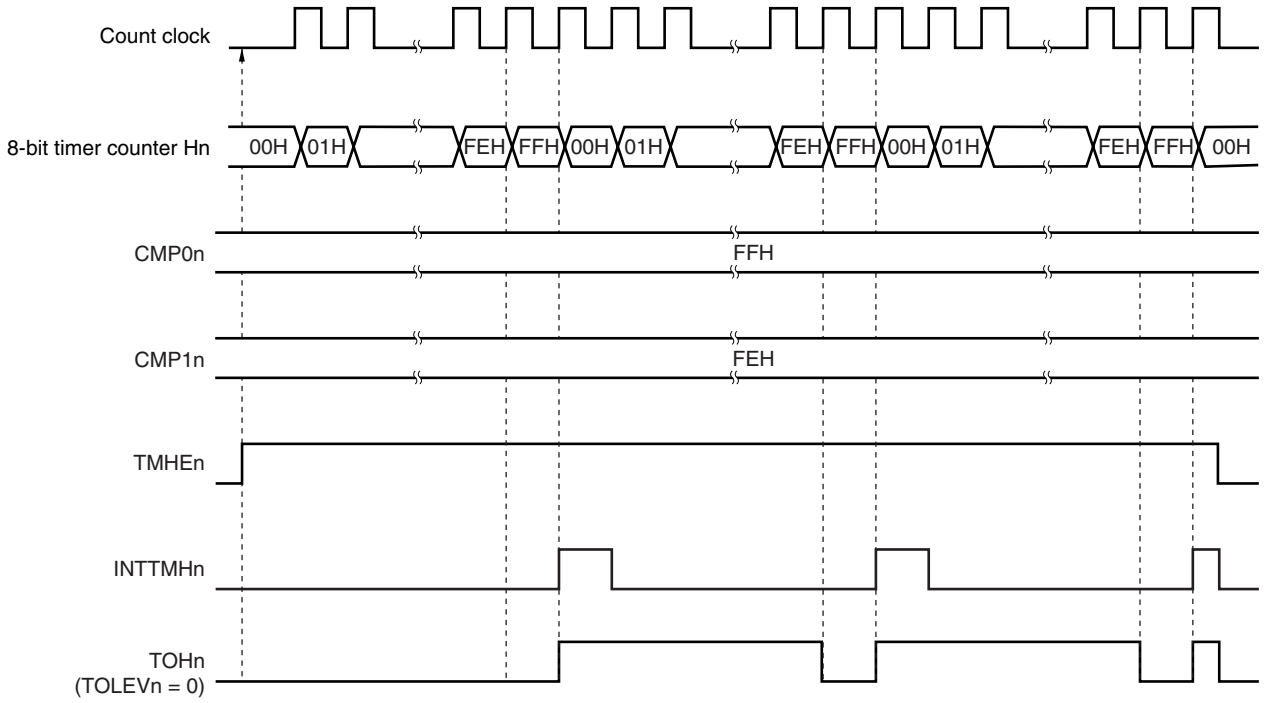

Remark n = 0, 1

Figure 9-12. Operation Timing in PWM Output Mode (3/4)

(d) Operation when CMP0n = 01H, CMP1n = 00H

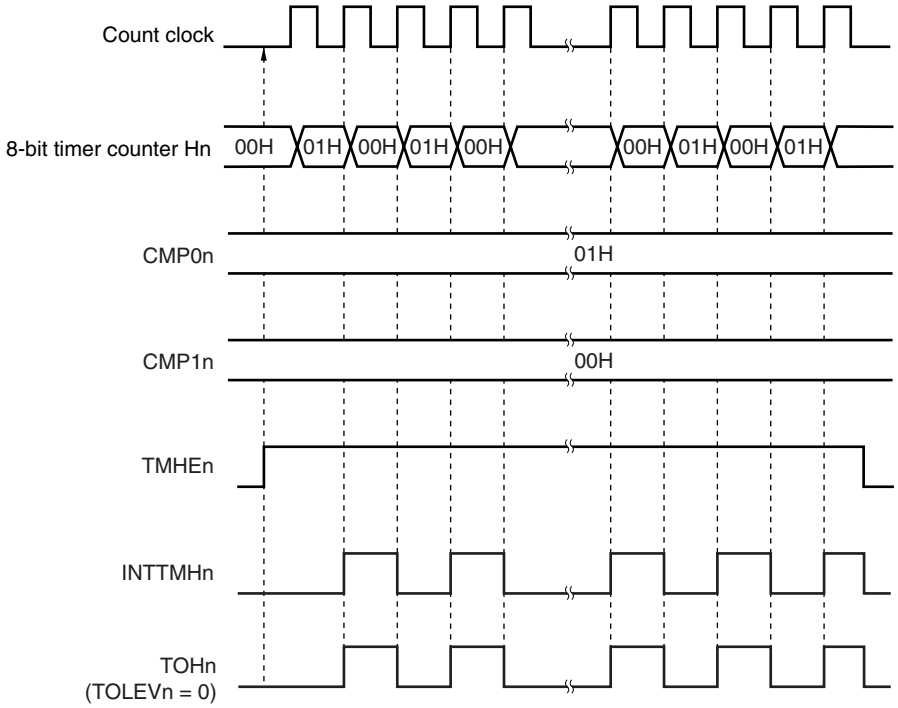

Remark n = 0, 1

Figure 9-12. Operation Timing in PWM Output Mode (4/4)

(e) Operation by changing CMP1n (CMP1n = 02H → 03H, CMP0n = A5H)

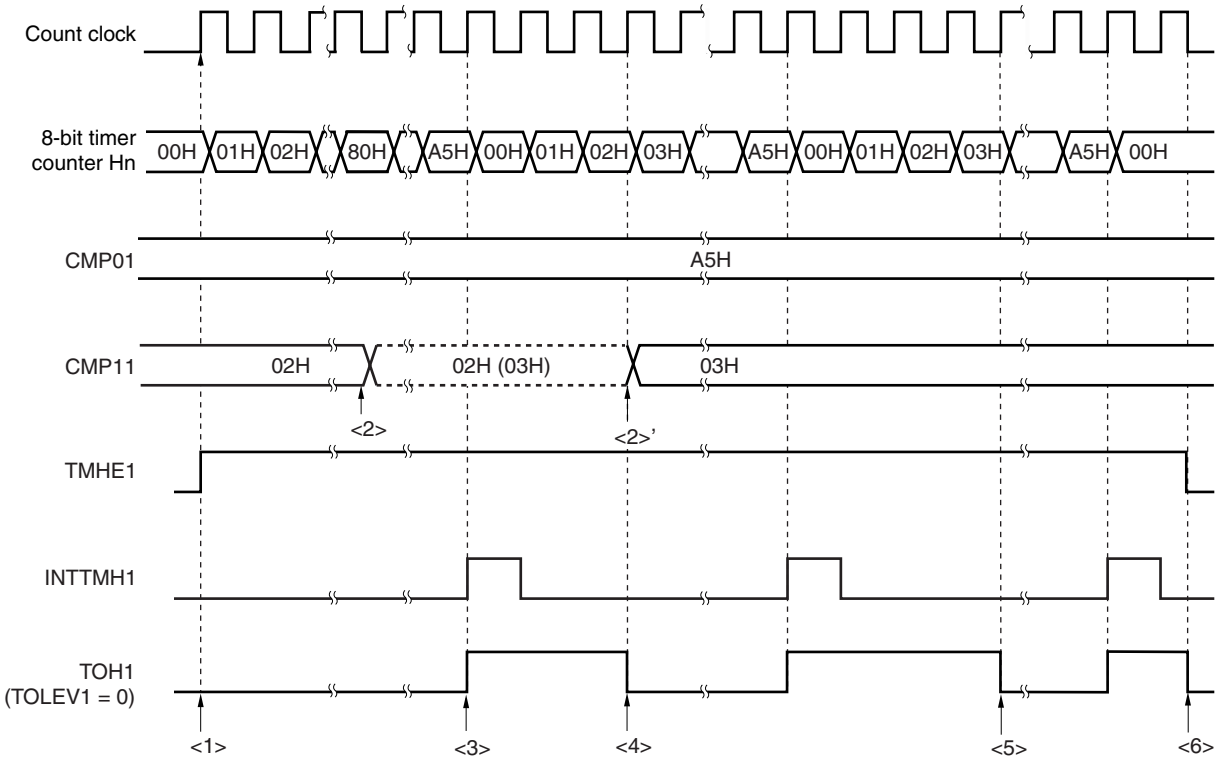

<1> The count operation is enabled by setting TMHEn = 1. Start the 8-bit timer counter Hn by masking one count clock to count up. At this time, PWM output outputs an inactive level.

<2> The CMP1n register value can be changed during timer counter operation. This operation is asynchronous to the count clock.

<3> When the values of the 8-bit timer counter Hn and the CMP0n register match, the value of the 8-bit timer counter Hn is cleared, an active level is output, and the INTTMHn signal is output.

<4> If the CMP1n register value is changed, the value is latched and not transferred to the register. When the values of the 8-bit timer counter Hn and the CMP1n register before the change match, the value is transferred to the CMP1n register and the CMP1n register value is changed (<2>').

However, three count clocks or more are required from when the CMP1n register value is changed to when the value is transferred to the register. If a match signal is generated within three count clocks, the changed value cannot be transferred to the register.

<5> When the values of the 8-bit timer counter Hn and the CMP1n register after the change match, an inactive level is output. The 8-bit timer counter Hn is not cleared and the INTTMHn signal is not generated.

<6> Clearing the TMHEn bit to 0 during timer Hn operation sets the INTTMHn signal to the default and PWM output to an inactive level.

Remark n = 0, 1

9.4.3 Carrier generator operation (8-bit timer H1 only)

In the carrier generator mode, the 8-bit timer H1 is used to generate the carrier signal of an infrared remote controller, and the 8-bit timer/event counter 51 is used to generate an infrared remote control signal (time count).

The carrier clock generated by the 8-bit timer H1 is output in the cycle set by the 8-bit timer/event counter 51.

In carrier generator mode, the output of the 8-bit timer H1 carrier pulse is controlled by the 8-bit timer/event counter 51, and the carrier pulse is output from the TOH1 output.

(1) Carrier generation

In carrier generator mode, the 8-bit timer H compare register 01 (CMP01) generates a low-level width carrier pulse waveform and the 8-bit timer H compare register 11 (CMP11) generates a high-level width carrier pulse waveform.

Rewriting the CMP11 register during the 8-bit timer H1 operation is possible but rewriting the CMP01 register is prohibited.

(2) Carrier output control

Carrier output is controlled by the interrupt request signal (INTTM51) of the 8-bit timer/event counter 51 and the NRZB1 and RMC1 bits of the 8-bit timer H carrier control register (TMCYC1). The relationship between the outputs is shown below.

RMC1 Bit	NRZB1 Bit	Output
0	0	Low-level output
0	1	High-level output at rising edge of INTTM51 signal input
1	0	Low-level output
1	1	Carrier pulse output at rising edge of INTTM51 signal input

To control the carrier pulse output during a count operation, the NRZ1 and NRZB1 bits of the TMCYC1 register have a master and slave bit configuration. The NRZ1 bit is read-only but the NRZB1 bit can be read and written. The INTTM51 signal is synchronized with the 8-bit timer H1 count clock and is output as the INTTM5H1 signal. The INTTM5H1 signal becomes the data transfer signal of the NRZ1 bit, and the NRZB1 bit value is transferred to the NRZ1 bit. The timing for transfer from the NRZB1 bit to the NRZ1 bit is as shown below.

Figure 9-13. Transfer Timing

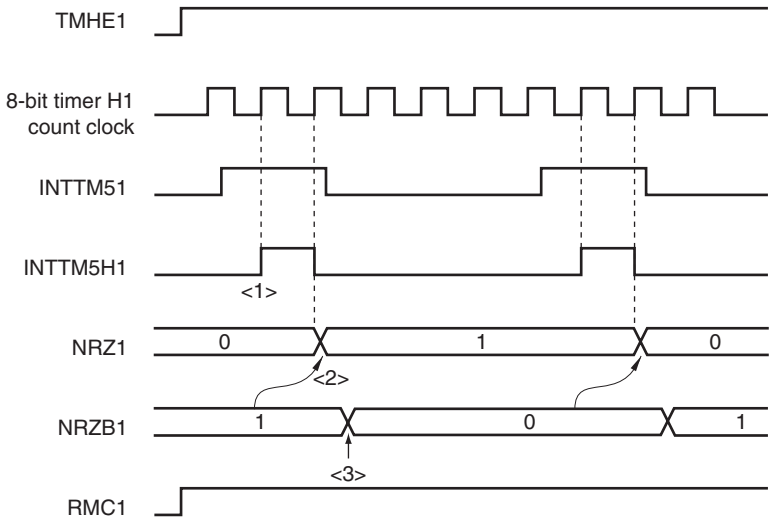

<1> The INTTM51 signal is synchronized with the count clock of the 8-bit timer H1 and is output as the INTTM5H1 signal.

<2> The value of the NRZB1 bit is transferred to the NRZ1 bit at the second clock from the rising edge of the INTTM5H1 signal.

<3> Write the next value to the NRZB1 bit in the interrupt servicing program that has been started by the INTTM5H1 interrupt or after timing has been checked by polling the interrupt request flag. Write data to count the next time to the CR51 register.

Cautions 1. Do not rewrite the NRZB1 bit again until at least the second clock after it has been rewritten, or else the transfer from the NRZB1 bit to the NRZ1 bit is not guaranteed.

2. When the 8-bit timer/event counter 51 is used in the carrier generator mode, an interrupt is generated at the timing of <1>. When the 8-bit timer/event counter 51 is used in a mode other than the carrier generator mode, the timing of the interrupt generation differs.

Remark INTTM5H1 is an internal signal and not an interrupt source.

Setting

<1> Set each register.

Figure 9-14. Register Setting in Carrier Generator Mode

(i) Setting 8-bit timer H mode register 1 (TMHMD1)



(ii) CMP01 register setting

- Compare value

(iii) CMP11 register setting

- Compare value

(iv) TMCYC1 register setting

- RMC1 = 1 ... Remote control output enable bit
- NRZB1 = 0/1 ... carrier output enable bit

(v) TCL51 and TMC51 register setting

- See **8.3 Registers Controlling 8-Bit Timer/Event Counters 50 and 51**.

<2> When TMHE1 = 1, the 8-bit timer H1 starts counting.

<3> When TCE51 of the 8-bit timer mode control register 51 (TMC51) is set to 1, the 8-bit timer/event counter 51 starts counting.

<4> After the count operation is enabled, the first compare register to be compared is the CMP01 register. When the count value of the 8-bit timer counter H1 and the CMP01 register value match, the INTTMH1 signal is generated, the 8-bit timer counter H1 is cleared. At the same time, the compare register to be compared with the 8-bit timer counter H1 is switched from the CMP01 register to the CMP11 register.

<5> When the count value of the 8-bit timer counter H1 and the CMP11 register value match, the INTTMH1 signal is generated, the 8-bit timer counter H1 is cleared. At the same time, the compare register to be compared with the 8-bit timer counter H1 is switched from the CMP11 register to the CMP01 register.

<6> By performing procedures <4> and <5> repeatedly, a carrier clock is generated.

<7> The INTTM51 signal is synchronized with count clock of the 8-bit timer H1 and output as the INTTM5H1 signal. The INTTM5H1 signal becomes the data transfer signal for the NRZB1 bit, and the NRZB1 bit value is transferred to the NRZ1 bit.

<8> Write the next value to the NRZB1 bit in the interrupt servicing program that has been started by the INTTM5H1 interrupt or after timing has been checked by polling the interrupt request flag. Write data to count the next time to the CR51 register.

<9> When the NRZ1 bit is high level, a carrier clock is output by TOH1 output.

<10> By performing the procedures above, an arbitrary carrier clock is obtained. To stop the count operation, clear TMHE1 to 0.

If the setting value of the CMP01 register is N, the setting value of the CMP11 register is M, and the count clock frequency is f_{CNT}, the carrier clock output cycle and duty are as follows.

- Carrier clock output cycle = (N + M + 2)/f_{CNT}
- Duty = High-level width/carrier clock output width = (M + 1)/(N + M + 2)

Cautions 1. Be sure to set the CMP11 register when starting the timer count operation (TMHE1 = 1) after the timer count operation was stopped (TMHE1 = 0) (be sure to set again even if setting the same value to the CMP11 register).

2. Set so that the count clock frequency of TMH1 becomes more than 6 times the count clock frequency of TM51.

3. Set the values of the CMP01 and CMP11 registers in a range of 01H to FFH.

4. The set value of the CMP11 register can be changed while the timer counter is operating. However, it takes the duration of three operating clocks (signal selected by the CKS12 to CKS10 bits of the TMHMD1 register) since the value of the CMP11 register has been changed until the value is transferred to the register.

5. Be sure to set the RMC1 bit before the count operation is started.

Remarks 1. For the setting of the output pin, see **9.3 (3) Port mode register 1 (PM1)**.

2. For how to enable the INTTMH1 signal interrupt, see **CHAPTER 20 INTERRUPT FUNCTIONS**.

Figure 9-15. Carrier Generator Mode Operation Timing (1/3)

(a) Operation when CMP01 = N, CMP11 = N

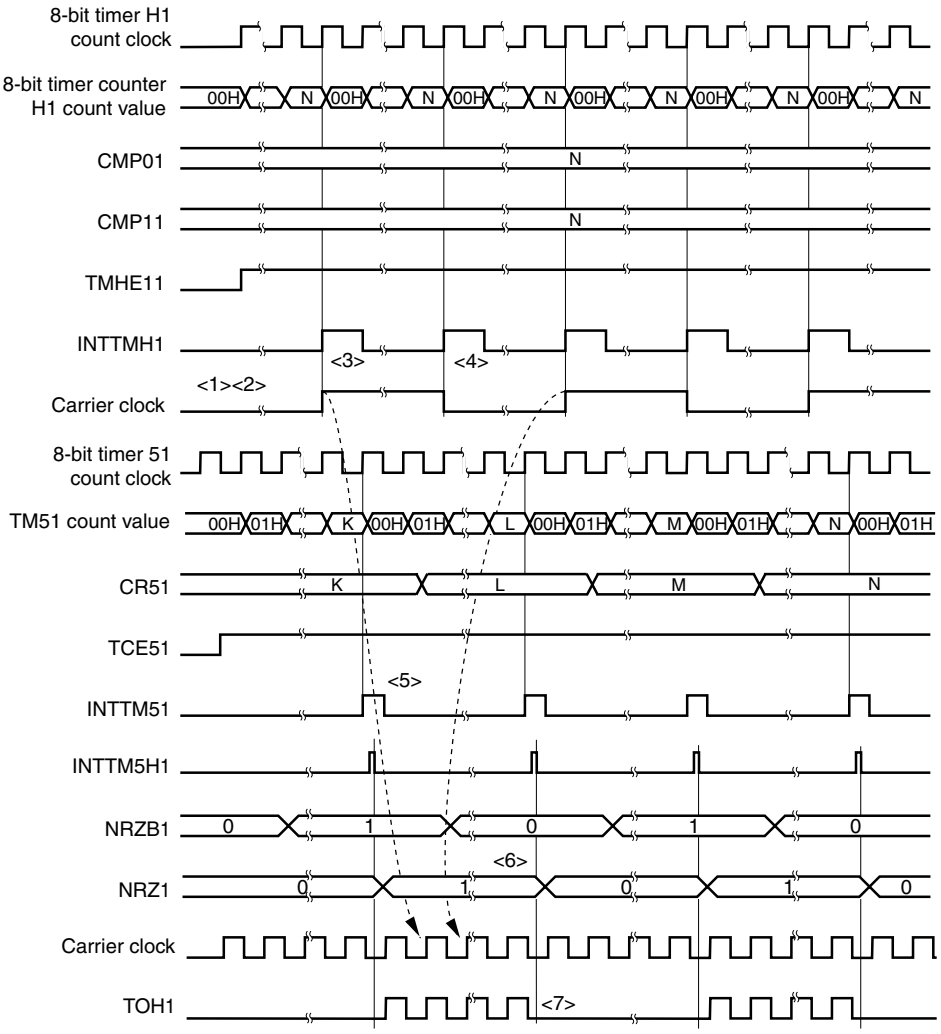

<1> When TMHE1 = 0 and TCE51 = 0, the 8-bit timer counter H1 operation is stopped.

<2> When TMHE1 = 1 is set, the 8-bit timer counter H1 starts a count operation. At that time, the carrier clock remains default.

<3> When the count value of the 8-bit timer counter H1 matches the CMP01 register value, the first INTTMH1 signal is generated, the carrier clock signal is inverted, and the compare register to be compared with the 8-bit timer counter H1 is switched from the CMP01 register to the CMP11 register. The 8-bit timer counter H1 is cleared to 00H.

<4> When the count value of the 8-bit timer counter H1 matches the CMP11 register value, the INTTMH1 signal is generated, the carrier clock signal is inverted, and the compare register to be compared with the 8-bit timer counter H1 is switched from the CMP11 register to the CMP01 register. The 8-bit timer counter H1 is cleared to 00H. By performing procedures <3> and <4> repeatedly, a carrier clock with duty fixed to 50% is generated.

<5> When the INTTM51 signal is generated, it is synchronized with the 8-bit timer H1 count clock and is output as the INTTM5H1 signal.

<6> The INTTM5H1 signal becomes the data transfer signal for the NRZB1 bit, and the NRZB1 bit value is transferred to the NRZ1 bit.

<7> When NRZ1 = 0 is set, the TOH1 output becomes low level.

Remark INTTM5H1 is an internal signal and not an interrupt source.

Figure 9-15. Carrier Generator Mode Operation Timing (2/3)

(b) Operation when CMP01 = N, CMP11 = M

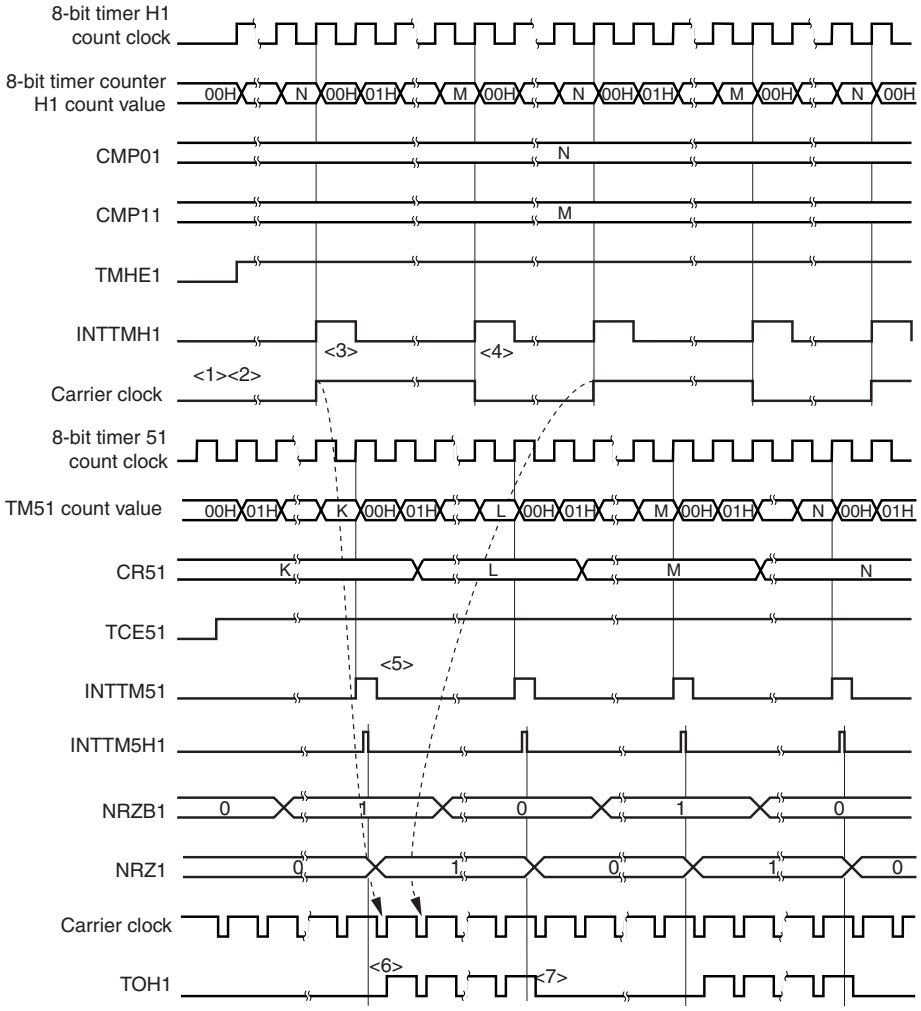

<1> When TMHE1 = 0 and TCE51 = 0, the 8-bit timer counter H1 operation is stopped.

<2> When TMHE1 = 1 is set, the 8-bit timer counter H1 starts a count operation. At that time, the carrier clock remains default.

<3> When the count value of the 8-bit timer counter H1 matches the CMP01 register value, the first INTTMH1 signal is generated, the carrier clock signal is inverted, and the compare register to be compared with the 8-bit timer counter H1 is switched from the CMP01 register to the CMP11 register. The 8-bit timer counter H1 is cleared to 00H.

<4> When the count value of the 8-bit timer counter H1 matches the CMP11 register value, the INTTMH1 signal is generated, the carrier clock signal is inverted, and the compare register to be compared with the 8-bit timer counter H1 is switched from the CMP11 register to the CMP01 register. The 8-bit timer counter H1 is cleared to 00H. By performing procedures <3> and <4> repeatedly, a carrier clock with duty fixed to other than 50% is generated.

<5> When the INTTM51 signal is generated, it is synchronized with the 8-bit timer H1 count clock and is output as the INTTM5H1 signal.

<6> A carrier signal is output at the first rising edge of the carrier clock if NRZ1 is set to 1.

<7> When NRZ1 = 0, the TOH1 output is held at the high level and is not changed to low level while the carrier clock is high level (from <6> and <7>, the high-level width of the carrier clock waveform is guaranteed).

Remark INTTM5H1 is an internal signal and not an interrupt source.

Figure 9-15. Carrier Generator Mode Operation Timing (3/3)

(c) Operation when CMP11 is changed

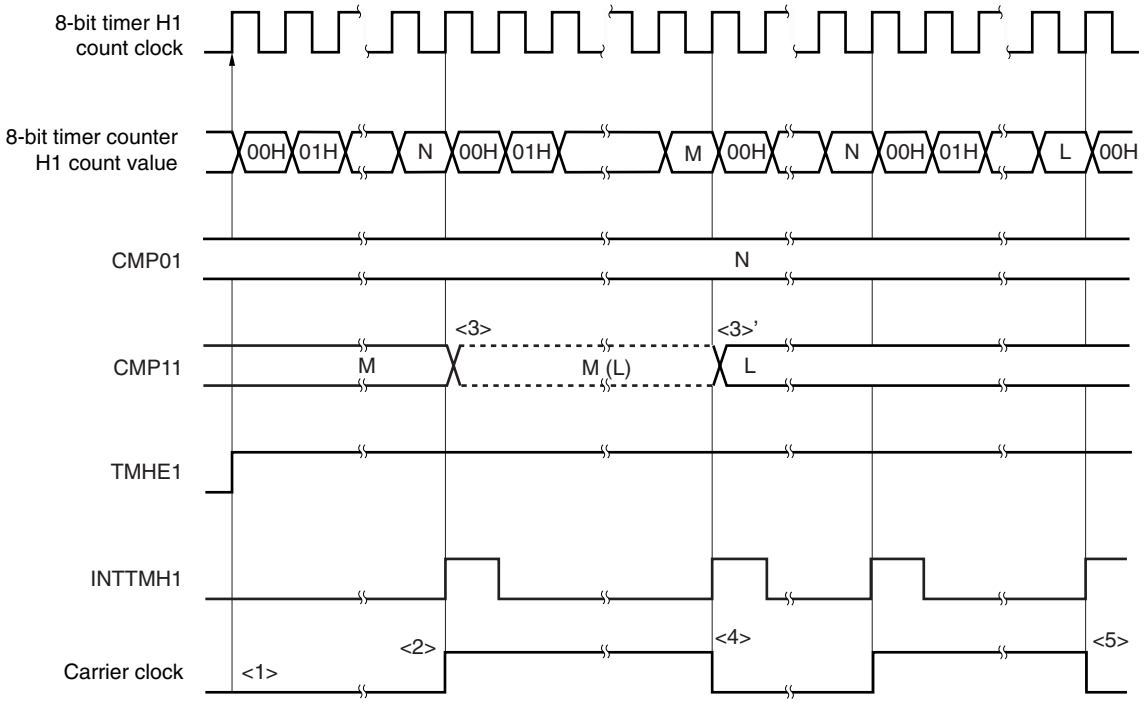

<1> When TMHE1 = 1 is set, the 8-bit timer H1 starts a count operation. At that time, the carrier clock remains default.

<2> When the count value of the 8-bit timer counter H1 matches the value of the CMP01 register, the INTTMH1 signal is output, the carrier signal is inverted, and the timer counter is cleared to 00H. At the same time, the compare register whose value is to be compared with that of the 8-bit timer counter H1 is changed from the CMP01 register to the CMP11 register.

<3> The CMP11 register is asynchronous to the count clock, and its value can be changed while the 8-bit timer H1 is operating. The new value (L) to which the value of the register is to be changed is latched. When the count value of the 8-bit timer counter H1 matches the value (M) of the CMP11 register before the change, the CMP11 register is changed (<3>').

However, it takes three count clocks or more since the value of the CMP11 register has been changed until the value is transferred to the register. Even if a match signal is generated before the duration of three count clocks elapses, the new value is not transferred to the register.

<4> When the count value of 8-bit timer counter H1 matches the value (M) of the CMP1 register before the change, the INTTMH1 signal is output, the carrier signal is inverted, and the timer counter is cleared to 00H. At the same time, the compare register whose value is to be compared with that of the 8-bit timer counter H1 is changed from the CMP11 register to the CMP01 register.

<5> The timing at which the count value of the 8-bit timer counter H1 and the CMP11 register value match again is indicated by the value after the change (L).

CHAPTER 10 WATCH TIMER

	78K0/KB2	78K0/KC2	78K0/KD2	78K0/KE2	78K0/KF2
Watch timer	–	√			

Remark √: Mounted, –: Not mounted

10.1 Functions of Watch Timer

The watch timer has the following functions.

- Watch timer
- Interval timer

The watch timer and the interval timer can be used simultaneously.
Figure 10-1 shows the watch timer block diagram.

Figure 10-1. Block Diagram of Watch Timer

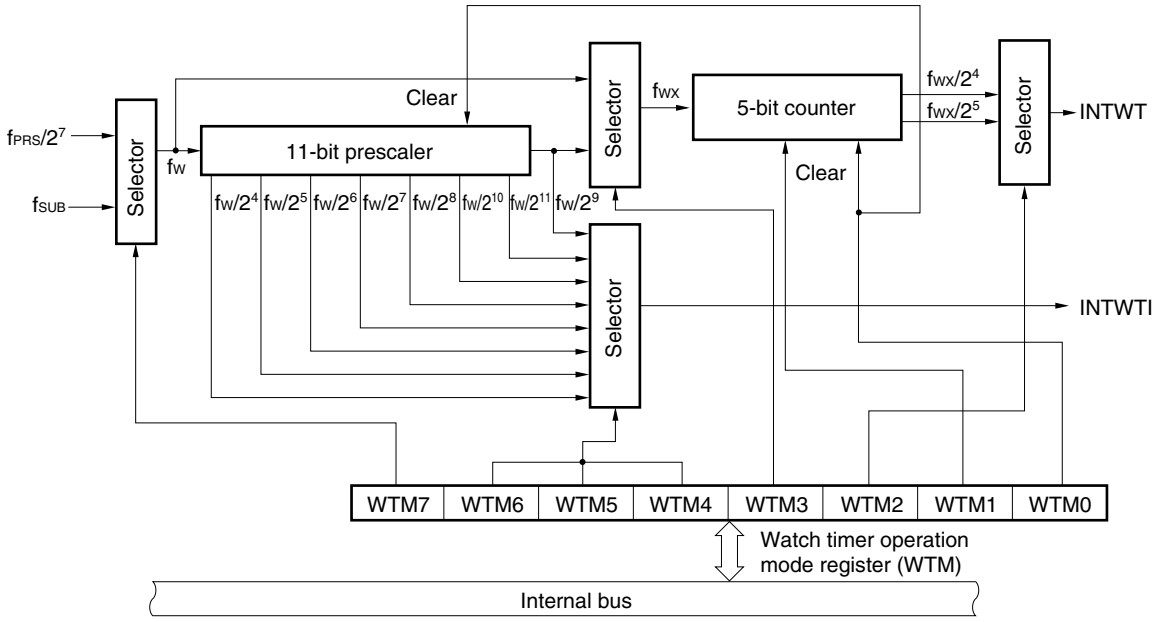

Remark f_{PRS}: Peripheral hardware clock frequency
f_{SUB}: Subsystem clock frequency
fw: Watch timer clock frequency ($f_{PRS}/2^7$ or f_{SUB})
fwx: fw or $fw/2^9$

(1) Watch timer

When the peripheral hardware clock or subsystem clock is used, interrupt request signals (INTWT) are generated at preset intervals.

Table 10-1. Watch Timer Interrupt Time

Interrupt Time	When Operated at f_{SUB} = 32.768 kHz	When Operated at f_{PRS} = 2 MHz	When Operated at f_{PRS} = 5 MHz	When Operated at f_{PRS} = 10 MHz	When Operated at f_{PRS} = 20 MHz
2^4/fw	488 μs	1.02 ms	410 μs	205 μs	102 μs
2^5/fw	977 μs	2.05 ms	819 μs	410 μs	205 μs
2^{13}/fw	0.25 s	0.52 s	0.210 s	0.105 s	52.5 ms
2^{14}/fw	0.5 s	1.05 s	0.419 s	0.210 s	0.105 s

Remark f_{PRS}: Peripheral hardware clock frequency
f_{SUB}: Subsystem clock frequency
fw: Watch timer clock frequency ($f_{PRS}/2^7$ or f_{SUB})

(2) Interval timer

Interrupt request signals (INTWTI) are generated at preset time intervals.

Table 10-2. Interval Timer Interval Time

Interval Time	When Operated at f_{SUB} = 32.768 kHz	When Operated at f_{PRS} = 2 MHz	When Operated at f_{PRS} = 5 MHz	When Operated at f_{PRS} = 10 MHz	When Operated at f_{PRS} = 20 MHz
2^4/fw	488 μs	1.02 ms	410 μs	205 μs	102 μs
2^5/fw	977 μs	2.05 ms	820 μs	410 μs	205 μs
2^6/fw	1.95 ms	4.10 ms	1.64 ms	820 μs	410 μs
2^7/fw	3.91 ms	8.20 ms	3.28 ms	1.64 ms	820 μs
2^8/fw	7.81 ms	16.4 ms	6.55 ms	3.28 ms	1.64 ms
2^9/fw	15.6 ms	32.8 ms	13.1 ms	6.55 ms	3.28 ms
2^{10}/fw	31.3 ms	65.5 ms	26.2 ms	13.1 ms	6.55 ms
2^{11}/fw	62.5 ms	131.1 ms	52.4 ms	26.2 ms	13.1 ms

Remark f_{PRS}: Peripheral hardware clock frequency
f_{SUB}: Subsystem clock frequency
fw: Watch timer clock frequency ($f_{PRS}/2^7$ or f_{SUB})

10.2 Configuration of Watch Timer

The watch timer includes the following hardware.

Table 10-3. Watch Timer Configuration

Item	Configuration
Counter	5 bits × 1
Prescaler	11 bits × 1
Control register	Watch timer operation mode register (WTM)

10.3 Register Controlling Watch Timer

The watch timer is controlled by the watch timer operation mode register (WTM).

- **Watch timer operation mode register (WTM)**
  This register sets the watch timer count clock, enables/disables operation, prescaler interval time, and 5-bit counter operation control.
  WTM is set by a 1-bit or 8-bit memory manipulation instruction.
  Reset signal generation clears WTM to 00H.

Figure 10-2. Format of Watch Timer Operation Mode Register (WTM)

Address: FF6FH After reset: 00H R/W

Symbol	7	6	5	4	3	2	<1>	<0>
WTM	WTM7	WTM6	WTM5	WTM4	WTM3	WTM2	WTM1	WTM0

WTM7	Watch timer count clock selection (f_W)[Note]					
		f_{SUB} = 32.768 kHz	f_{PRS} = 2 MHz	f_{PRS} = 5 MHz	f_{PRS} = 10 MHz	f_{PRS} = 20 MHz
0	$f_{PRS}/2^7$	–	15.625 kHz	39.062 kHz	78.125 kHz	156.25 kHz
1	f_{SUB}	32.768 kHz	–			

WTM6	WTM5	WTM4	Prescaler interval time selection
0	0	0	$2^4/f_W$
0	0	1	$2^5/f_W$
0	1	0	$2^6/f_W$
0	1	1	$2^7/f_W$
1	0	0	$2^8/f_W$
1	0	1	$2^9/f_W$
1	1	0	$2^{10}/f_W$
1	1	1	$2^{11}/f_W$

WTM3	WTM2	Selection of watch timer interrupt time
0	0	$2^{14}/f_W$
0	1	$2^{13}/f_W$
1	0	$2^5/f_W$
1	1	$2^4/f_W$

WTM1	5-bit counter operation control
0	Clear after operation stop
1	Start

WTM0	Watch timer operation enable
0	Operation stop (clear both prescaler and 5-bit counter)
1	Operation enable

Note The frequency that can be used for the peripheral hardware clock (f_{PRS}) differs depending on the power supply voltage and product specifications.

Supply Voltage	Conventional-specification Products (μPD78F05xx and 78F05xxD)	Expanded-specification Products (μPD78F05xxA and 78F05xxDA)
4.0 V ≤ V_{DD} ≤ 5.5 V	f_{PRS} ≤ 20 MHz	f_{PRS} ≤ 20 MHz
2.7 V ≤ V_{DD} < 4.0 V	f_{PRS} ≤ 10 MHz	
1.8 V ≤ V_{DD} < 2.7 V (Standard products and (A) grade products only)	f_{PRS} ≤ 5 MHz	f_{PRS} ≤ 5 MHz

(The values shown in the table above are those when f_{PRS} = f_{XH} (XSEL = 1).)

Caution Do not change the count clock and interval time (by setting bits 4 to 7 (WTM4 to WTM7) of WTM) during watch timer operation.

Remarks 1. f_W: Watch timer clock frequency ($f_{PRS}/2^7$ or f_{SUB})

2. f_{PRS}: Peripheral hardware clock frequency

3. f_{SUB}: Subsystem clock frequency

10.4 Watch Timer Operations

10.4.1 Watch timer operation

The watch timer generates an interrupt request signal (INTWT) at a specific time interval by using the peripheral hardware clock or subsystem clock.

When bit 0 (WTM0) and bit 1 (WTM1) of the watch timer operation mode register (WTM) are set to 1, the count operation starts. When these bits are cleared to 0, the 5-bit counter is cleared and the count operation stops.

When the interval timer is simultaneously operated, zero-second start can be achieved only for the watch timer by clearing WTM1 to 0. In this case, however, the 11-bit prescaler is not cleared. Therefore, an error up to $2^9 \times 1/fw$ seconds occurs in the first overflow (INTWT) after zero-second start.

The interrupt request is generated at the following time intervals.

Table 10-4. Watch Timer Interrupt Time

WTM3	WTM2	Interrupt Time Selection	When Operated at f_{SUB} = 32.768 kHz (WTM7 = 1)	When Operated at f_{PRS} = 2 MHz (WTM7 = 0)	When Operated at f_{PRS} = 5 MHz (WTM7 = 0)	When Operated at f_{PRS} = 10 MHz (WTM7 = 0)	When Operated at f_{PRS} = 20 MHz (WTM7 = 0)
0	0	$2^{14}/fw$	0.5 s	1.05 s	0.419 s	0.210 s	0.105 s
0	1	$2^{13}/fw$	0.25 s	0.52 s	0.210 s	0.105 s	52.5 ms
1	0	$2^5/fw$	977 μs	2.05 ms	819 μs	410 μs	205 μs
1	1	$2^4/fw$	488 μs	1.02 ms	410 μs	205 μs	102 μs

Remarks 1. fw: Watch timer clock frequency ($f_{PRS}/2^7$ or f_{SUB})

2. f_{PRS}: Peripheral hardware clock frequency

3. f_{SUB}: Subsystem clock frequency

10.4.2 Interval timer operation

The watch timer operates as interval timer which generates interrupt request signals (INTWTI) repeatedly at an interval of the preset count value.

The interval time can be selected with bits 4 to 6 (WTM4 to WTM6) of the watch timer operation mode register (WTM).

When bit 0 (WTM0) of the WTM is set to 1, the count operation starts. When this bit is set to 0, the count operation stops.

Table 10-5. Interval Timer Interval Time

WTM6	WTM5	WTM4	Interval Time	When Operated at f_{SUB} = 32.768 kHz (WTM7 = 1)	When Operated at f_{PRS} = 2 MHz (WTM7 = 0)	When Operated at f_{PRS} = 5 MHz (WTM7 = 0)	When Operated at f_{PRS} = 10 MHz (WTM7 = 0)	When Operated at f_{PRS} = 20 MHz (WTM7 = 0)
0	0	0	$2^4/fw$	488 μs	1.02 ms	410 μs	205 μs	102 μs
0	0	1	$2^5/fw$	977 μs	2.05 ms	820 μs	410 μs	205 μs
0	1	0	$2^6/fw$	1.95 ms	4.10 ms	1.64 ms	820 μs	410 μs
0	1	1	$2^7/fw$	3.91 ms	8.20 ms	3.28 ms	1.64 ms	820 μs
1	0	0	$2^8/fw$	7.81 ms	16.4 ms	6.55 ms	3.28 ms	1.64 ms
1	0	1	$2^9/fw$	15.6 ms	32.8 ms	13.1 ms	6.55 ms	3.28 ms
1	1	0	$2^{10}/fw$	31.3 ms	65.5 ms	26.2 ms	13.1 ms	6.55 ms
1	1	1	$2^{11}/fw$	62.5 ms	131.1 ms	52.4 ms	26.2 ms	13.1 ms

Remarks 1. fw: Watch timer clock frequency ($f_{PRS}/2^7$ or f_{SUB})

2. f_{PRS}: Peripheral hardware clock frequency

3. f_{SUB}: Subsystem clock frequency

Figure 10-3. Operation Timing of Watch Timer/Interval Timer

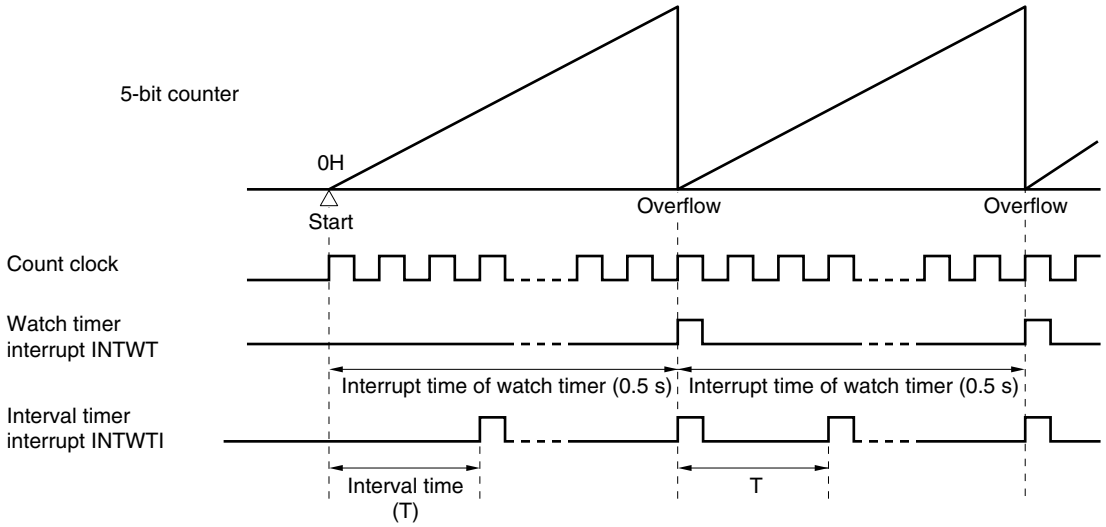

Remark fw: Watch timer clock frequency
Figures in parentheses are for operation with fw = 32.768 kHz (WTM7 = 1, WTM3, WTM2 = 0, 0)

10.5 Cautions for Watch Timer

When operation of the watch timer and 5-bit counter is enabled by the watch timer mode control register (WTM) (by setting bits 0 (WTM0) and 1 (WTM1) of WTM to 1), the interval until the first interrupt request signal (INTWT) is generated after the register is set does not exactly match the specification made with bits 2 and 3 (WTM2, WTM3) of WTM. Subsequently, however, the INTWT signal is generated at the specified intervals.

Figure 10-4. Example of Generation of Watch Timer Interrupt Request Signal (INTWT)
(When Interrupt Period = 0.5 s)

It takes 0.515625 seconds for the first INTWT to be generated ($2^9 \times 1/32768 = 0.015625$ s longer).
INTWT is then generated every 0.5 seconds.

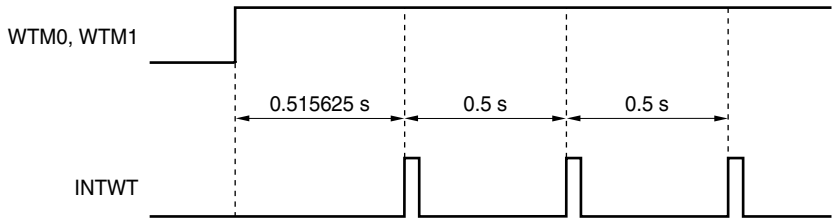

CHAPTER 11 WATCHDOG TIMER

11.1 Functions of Watchdog Timer

The watchdog timer is mounted onto all 78K0/Kx2 microcontroller products.

The watchdog timer operates on the internal low-speed oscillation clock.

The watchdog timer is used to detect an inadvertent program loop. If a program loop is detected, an internal reset signal is generated.

Program loop is detected in the following cases.

- If the watchdog timer counter overflows
- If a 1-bit manipulation instruction is executed on the watchdog timer enable register (WDTE)
- If data other than “ACH” is written to WDTE
- If data is written to WDTE during a window close period
- If the instruction is fetched from an area not set by the IMS and IXS registers (detection of an invalid check while the CPU hangs up)
- If the CPU accesses an area that is not set by the IMS and IXS registers (excluding FB00H to FFCFH and FFE0H to FFFFH) by executing a read/write instruction (detection of an abnormal access during a CPU program loop)

When a reset occurs due to the watchdog timer, bit 4 (WDTRF) of the reset control flag register (RESF) is set to 1. For details of RESF, see **CHAPTER 23 RESET FUNCTION**.

11.2 Configuration of Watchdog Timer

The watchdog timer includes the following hardware.

Table 11-1. Configuration of Watchdog Timer

Item	Configuration
Control register	Watchdog timer enable register (WDTE)

How the counter operation is controlled, overflow time, and window open period are set by the option byte.

Table 11-2. Setting of Option Bytes and Watchdog Timer

Setting of Watchdog Timer	Option Byte (0080H)
Window open period	Bits 6 and 5 (WINDOW1, WINDOW0)
Controlling counter operation of watchdog timer	Bit 4 (WDTON)
Overflow time of watchdog timer	Bits 3 to 1 (WDCS2 to WDCS0)

Remark For the option byte, see **CHAPTER 26 OPTION BYTE**.

Figure 11-1. Block Diagram of Watchdog Timer

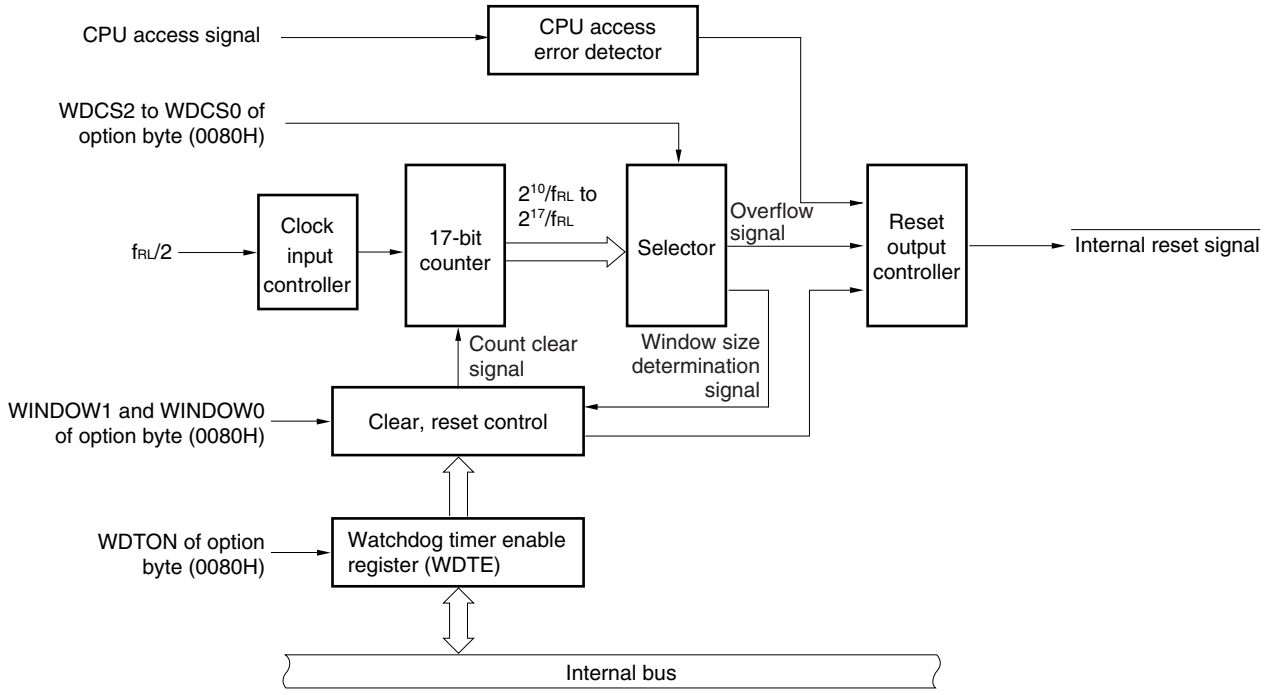

11.3 Register Controlling Watchdog Timer

The watchdog timer is controlled by the watchdog timer enable register (WDTE).

(1) Watchdog timer enable register (WDTE)

Writing ACH to WDTE clears the watchdog timer counter and starts counting again.

This register can be set by an 8-bit memory manipulation instruction.

Reset signal generation sets this register to 9AH or 1AH[Note].

Figure 11-2. Format of Watchdog Timer Enable Register (WDTE)

Address: FF99H After reset: 9AH/1AH[Note] R/W

Symbol	7	6	5	4	3	2	1	0
WDTE								

Note The WDTE reset value differs depending on the WDTON setting value of the option byte (0080H). To operate watchdog timer, set WDTON to 1.

WDTON Setting Value	WDTE Reset Value
0 (watchdog timer count operation disabled)	1AH
1 (watchdog timer count operation enabled)	9AH

Cautions 1. If a value other than ACH is written to WDTE, an internal reset signal is generated. If the source clock to the watchdog timer is stopped, however, an internal reset signal is generated when the source clock to the watchdog timer resumes operation.

2. If a 1-bit memory manipulation instruction is executed for WDTE, an internal reset signal is generated. If the source clock to the watchdog timer is stopped, however, an internal reset signal is generated when the source clock to the watchdog timer resumes operation.

3. The value read from WDTE is 9AH/1AH (this differs from the written value (ACH)).

11.4 Operation of Watchdog Timer

11.4.1 Controlling operation of watchdog timer

1. When the watchdog timer is used, its operation is specified by the option byte (0080H).

   - Enable counting operation of the watchdog timer by setting bit 4 (WDTON) of the option byte (0080H) to 1 (the counter starts operating after a reset release) (for details, see **CHAPTER 26**).

WDTON	Operation Control of Watchdog Timer Counter/Illegal Access Detection
0	Counter operation disabled (counting stopped after reset), illegal access detection operation disabled
1	Counter operation enabled (counting started after reset), illegal access detection operation enabled

   - Set an overflow time by using bits 3 to 1 (WDCS2 to WDCS0) of the option byte (0080H) (for details, see **11.4.2** and **CHAPTER 26**).
   - Set a window open period by using bits 6 and 5 (WINDOW1 and WINDOW0) of the option byte (0080H) (for details, see **11.4.3** and **CHAPTER 26**).

2. After a reset release, the watchdog timer starts counting.
3. By writing “ACH” to WDTE after the watchdog timer starts counting and before the overflow time set by the option byte, the watchdog timer is cleared and starts counting again.
4. After that, write WDTE the second time or later after a reset release during the window open period. If WDTE is written during a window close period, an internal reset signal is generated.
5. If the overflow time expires without “ACH” written to WDTE, an internal reset signal is generated.
   A internal reset signal is generated in the following cases.

   - If a 1-bit manipulation instruction is executed on the watchdog timer enable register (WDTE)
   - If data other than “ACH” is written to WDTE
   - If the instruction is fetched from an area not set by the IMS and IXS registers (detection of an invalid check during a CPU program loop)
   - If the CPU accesses an area not set by the IMS and IXS registers (excluding FB00H to FFCFH and FFE0H to FFFFH) by executing a read/write instruction (detection of an abnormal access during a CPU program loop)

Cautions 1. The first writing to WDTE after a reset release clears the watchdog timer, if it is made before the overflow time regardless of the timing of the writing, and the watchdog timer starts counting again.

2. If the watchdog timer is cleared by writing “ACH” to WDTE, the actual overflow time may be different from the overflow time set by the option byte by up to 2/f_{RL} seconds.

3. The watchdog timer can be cleared immediately before the count value overflows (FFFFH).

Cautions 4. The operation of the watchdog timer in the HALT and STOP modes differs as follows depending on the set value of bit 0 (LSROSC) of the option byte.

	LSROSC = 0 (Internal Low-Speed Oscillator Can Be Stopped by Software)	LSROSC = 1 (Internal Low-Speed Oscillator Cannot Be Stopped)
In HALT mode	Watchdog timer operation stops.	Watchdog timer operation continues.
In STOP mode		

If LSROSC = 0, the watchdog timer resumes counting after the HALT or STOP mode is released. At this time, the counter is not cleared to 0 but starts counting from the value at which it was stopped.

If oscillation of the internal low-speed oscillator is stopped by setting LSRSTOP (bit 1 of the internal oscillation mode register (RCM) = 1) when LSROSC = 0, the watchdog timer stops operating. At this time, the counter is not cleared to 0.

5. The watchdog timer continues its operation during self-programming and EEPROM emulation of the flash memory. During processing, the interrupt acknowledge time is delayed. Set the overflow time and window size taking this delay into consideration.

11.4.2 Setting overflow time of watchdog timer

Set the overflow time of the watchdog timer by using bits 3 to 1 (WDCS2 to WDCS0) of the option byte (0080H).

If an overflow occurs, an internal reset signal is generated. The present count is cleared and the watchdog timer starts counting again by writing “ACH” to WDTE during the window open period before the overflow time.

The following overflow time is set.

Table 11-3. Setting of Overflow Time of Watchdog Timer

WDCS2	WDCS1	WDCS0	Overflow Time of Watchdog Timer
0	0	0	$2^{10}/f_{RL}$ (3.88 ms)
0	0	1	$2^{11}/f_{RL}$ (7.76 ms)
0	1	0	$2^{12}/f_{RL}$ (15.52 ms)
0	1	1	$2^{13}/f_{RL}$ (31.03 ms)
1	0	0	$2^{14}/f_{RL}$ (62.06 ms)
1	0	1	$2^{15}/f_{RL}$ (124.12 ms)
1	1	0	$2^{16}/f_{RL}$ (248.24 ms)
1	1	1	$2^{17}/f_{RL}$ (496.48 ms)

Cautions 1. The combination of WDCS2 = WDCS1 = WDCS0 = 0 and WINDOW1 = WINDOW0 = 0 is prohibited.

2. The watchdog timer continues its operation during self-programming and EEPROM emulation of the flash memory. During processing, the interrupt acknowledge time is delayed. Set the overflow time and window size taking this delay into consideration.

Remarks 1. f_{RL}: Internal low-speed oscillation clock frequency

2. ( ): f_{RL} = 264 kHz (MAX.)

11.4.3 Setting window open period of watchdog timer

Set the window open period of the watchdog timer by using bits 6 and 5 (WINDOW1, WINDOW0) of the option byte (0080H). The outline of the window is as follows.

- If “ACH” is written to WDTE during the window open period, the watchdog timer is cleared and starts counting again.
- Even if “ACH” is written to WDTE during the window close period, an abnormality is detected and an internal reset signal is generated.

Example: If the window open period is 25%

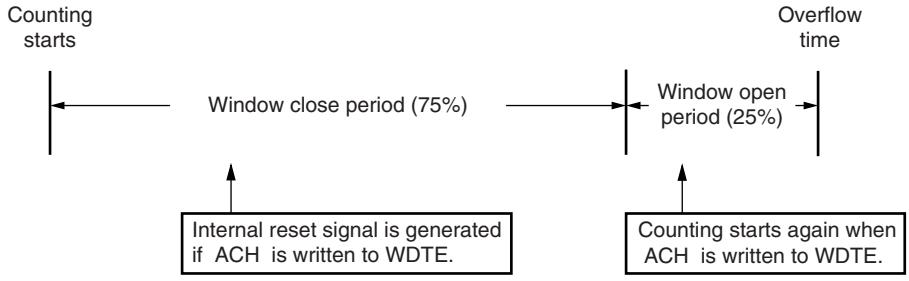

Caution The first writing to WDTE after a reset release clears the watchdog timer, if it is made before the overflow time regardless of the timing of the writing, and the watchdog timer starts counting again.

The window open period to be set is as follows.

Table 11-4. Setting Window Open Period of Watchdog Timer

WINDOW1	WINDOW0	Window Open Period of Watchdog Timer
0	0	25%
0	1	50%
1	0	75%
1	1	100%

Cautions 1. The combination of WDCS2 = WDCS1 = WDCS0 = 0 and WINDOW1 = WINDOW0 = 0 is prohibited.

2. Setting WINDOW1 = WINDOW0 = 0 is prohibited when using the watchdog timer at 1.8 V ≤ V_{DD} < 2.7 V.

3. The watchdog timer continues its operation during self-programming and EEPROM emulation of the flash memory. During processing, the interrupt acknowledge time is delayed. Set the overflow time and window size taking this delay into consideration.

Remark If the overflow time is set to $2^{11}/f_{RL}$, the window close time and open time are as follows.

(when 2.7 V ≤ V_{DD} ≤ 5.5 V)

	Setting of Window Open Period			
	25%	50%	75%	100%
Window close time	0 to 7.11 ms	0 to 4.74 ms	0 to 2.37 ms	None
Window open time	7.11 to 7.76 ms	4.74 to 7.76 ms	2.37 to 7.76 ms	0 to 7.76 ms

<When window open period is 25%>

- Overflow time:
  $2^{11}/f_{RL}$ (MAX.) = 2^{11}/264 kHz (MAX.) = 7.76 ms
- Window close time:
  0 to $2^{11}/f_{RL}$ (MIN.) × (1 − 0.25) = 0 to 2^{11}/216 kHz (MIN.) × 0.75 = 0 to 7.11 ms
- Window open time:
  $2^{11}/f_{RL}$ (MIN.) × (1 − 0.25) to $2^{11}/f_{RL}$ (MAX.) = 2^{11}/216 kHz (MIN.) × 0.75 to 2^{11}/264 kHz (MAX.) = 7.11 to 7.76 ms

CHAPTER 12 CLOCK OUTPUT/BUZZER OUTPUT CONTROLLER

	78K0/KB2	78K0/KC2	78K0/KD2	78K0/KE2	78K0/KF2
Clock output	–	38/44 pins: – 48 pins: √	√		
Buzzer output	–			√	

Remark √: Mounted, –: Not mounted

12.1 Functions of Clock Output/Buzzer Output Controller

The clock output controller is intended for carrier output during remote controlled transmission and clock output for supply to peripheral ICs. The clock selected with the clock output selection register (CKS) is output.

In addition, the buzzer output is intended for square-wave output of buzzer frequency selected with CKS.

Figure 12-1 and 12-2 show the block diagram of clock output/buzzer output controller.

Figure 12-1. Block Diagram of Clock Output/Buzzer Output Controller (78K0/KD2, 48-pin Products of 78K0/KC2)

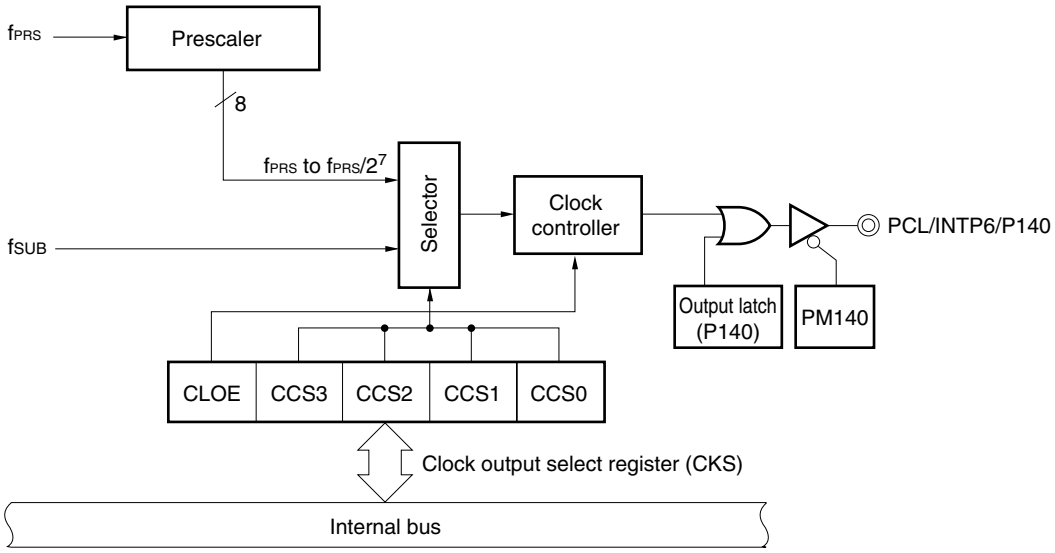

Figure 12-2. Block Diagram of Clock Output/Buzzer Output Controller (78K0/KE2, 78K0/KF2)

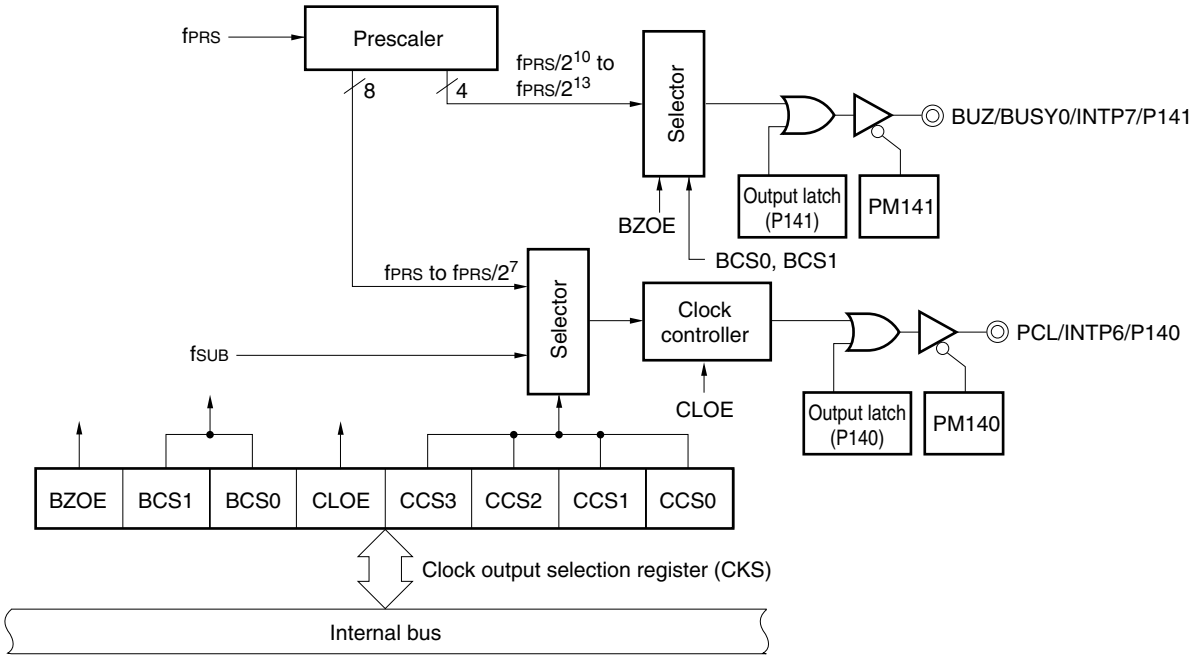

12.2 Configuration of Clock Output/Buzzer Output Controller

The clock output/buzzer output controller includes the following hardware.

Table 12-1. Configuration of Clock Output/Buzzer Output Controller

Item	Configuration
Control registers	Clock output selection register (CKS) Port mode register 14 (PM14) Port register 14 (P14)

12.3 Registers Controlling Clock Output/Buzzer Output Controller

The following two registers are used to control the clock output/buzzer output controller.

- Clock output selection register (CKS)
- Port mode register 14 (PM14)

(1) Clock output selection register (CKS)

This register sets output enable/disable for clock output (PCL) and for the buzzer frequency output (BUZ), and sets the output clock.

CKS is set by a 1-bit or 8-bit memory manipulation instruction.

Reset signal generation clears CKS to 00H.

Figure 12-3. Format of Clock Output Selection Register (CKS) (78K0/KD2, 48-pin Products of 78K0/KC2)

Address: FF40H After reset: 00H R/W

Symbol	7	6	5	<4>	3	2	1	0
CKS	0	0	0	CLOE	CCS3	CCS2	CCS1	CCS0

CLOE	PCL output enable/disable specification
0	Clock division circuit operation stopped. PCL fixed to low level.
1	Clock division circuit operation enabled. PCL output enabled.

CCS3	CCS2	CCS1	CCS0	PCL output clock selection[Note 1]			
					f_{SUB} = 32.768 kHz	f_{PRS} = 10 MHz	f_{PRS} = 20 MHz
0	0	0	0	f_{PRS}[Note 2]	–	10 MHz	Setting prohibited[Note 3]
0	0	0	1	$f_{PRS}/2$		5 MHz	10 MHz
0	0	1	0	$f_{PRS}/2^2$		2.5 MHz	5 MHz
0	0	1	1	$f_{PRS}/2^3$		1.25 MHz	2.5 MHz
0	1	0	0	$f_{PRS}/2^4$		625 kHz	1.25 MHz
0	1	0	1	$f_{PRS}/2^5$		312.5 kHz	625 kHz
0	1	1	0	$f_{PRS}/2^6$		156.25 kHz	312.5 kHz
0	1	1	1	$f_{PRS}/2^7$		78.125 kHz	156.25 kHz
1	0	0	0	f_{SUB}	32.768 kHz	–	
Other than above				Setting prohibited			

Notes 1. The frequency that can be used for the peripheral hardware clock (f_{PRS}) differs depending on the power supply voltage and product specifications.

Supply Voltage	Conventional-specification Products (μPD78F05xx and 78F05xxD)	Expanded-specification Products (μPD78F05xxA and 78F05xxDA)
4.0 V ≤ V_{DD} ≤ 5.5 V	f_{PRS} ≤ 20 MHz	f_{PRS} ≤ 20 MHz
2.7 V ≤ V_{DD} < 4.0 V	f_{PRS} ≤ 10 MHz	
1.8 V ≤ V_{DD} < 2.7 V (Standard products and (A) grade products only)	f_{PRS} ≤ 5 MHz	f_{PRS} ≤ 5 MHz

(The values shown in the table above are those when f_{PRS} = f_{XH} (XSEL = 1).)

2. If the peripheral hardware clock operates on the internal high-speed oscillation clock when 1.8 V ≤ V_{DD} < 2.7 V, setting CCS3 = CCS2 = CCS1 = CCS0 = 0 (output clock of PCL: f_{PRS}) is prohibited.

3. The PCL output clock prohibits settings if they exceed 10 MHz.

Caution Set CCS3 to CCS0 while the clock output operation is stopped (CLOE = 0).

Remarks 1. f_{PRS}: Peripheral hardware clock frequency

2. f_{SUB}: Subsystem clock frequency

Figure 12-4. Format of Clock Output Selection Register (CKS) (78K0/KE2, 78K0/KF2)

Address: FF40H After reset: 00H R/W

Symbol	<7>	6	5	<4>	3	2	1	0
CKS	BZOE	BCS1	BCS0	CLOE	CCS3	CCS2	CCS1	CCS0

BZOE	BUZ output enable/disable specification
0	Clock division circuit operation stopped. BUZ fixed to low level.
1	Clock division circuit operation enabled. BUZ output enabled.

BCS1	BCS0	BUZ output clock selection[Note 1]		
			f_{PRS} = 10 MHz	f_{PRS} = 20 MHz
0	0	$f_{PRS}/2^{10}$	9.77 kHz	19.54 kHz
0	1	$f_{PRS}/2^{11}$	4.88 kHz	9.77 kHz
1	0	$f_{PRS}/2^{12}$	2.44 kHz	4.88 kHz
1	1	$f_{PRS}/2^{13}$	1.22 kHz	2.44 kHz

CLOE	PCL output enable/disable specification
0	Clock division circuit operation stopped. PCL fixed to low level.
1	Clock division circuit operation enabled. PCL output enabled.

CCS3	CCS2	CCS1	CCS0	PCL output clock selection[Note 1]			
					f_{SUB} = 32.768 kHz	f_{PRS} = 10 MHz	f_{PRS} = 20 MHz
0	0	0	0	f_{PRS}[Note 2]	–	10 MHz	Setting prohibited[Note 3]
0	0	0	1	$f_{PRS}/2$		5 MHz	10 MHz
0	0	1	0	$f_{PRS}/2^2$		2.5 MHz	5 MHz
0	0	1	1	$f_{PRS}/2^3$		1.25 MHz	2.5 MHz
0	1	0	0	$f_{PRS}/2^4$		625 kHz	1.25 MHz
0	1	0	1	$f_{PRS}/2^5$		312.5 kHz	625 kHz
0	1	1	0	$f_{PRS}/2^6$		156.25 kHz	312.5 kHz
0	1	1	1	$f_{PRS}/2^7$		78.125 kHz	156.25 kHz
1	0	0	0	f_{SUB}	32.768 kHz	–	
Other than above				Setting prohibited			

Notes 1. The frequency that can be used for the peripheral hardware clock (f_{PRS}) differs depending on the power supply voltage and product specifications.

Supply Voltage	Conventional-specification Products (μPD78F05xx and 78F05xxD)	Expanded-specification Products (μPD78F05xxA and 78F05xxDA)
4.0 V ≤ V_{DD} ≤ 5.5 V	f_{PRS} ≤ 20 MHz	f_{PRS} ≤ 20 MHz
2.7 V ≤ V_{DD} < 4.0 V	f_{PRS} ≤ 10 MHz	
1.8 V ≤ V_{DD} < 2.7 V (Standard products and (A) grade products only)	f_{PRS} ≤ 5 MHz	f_{PRS} ≤ 5 MHz

(The values shown in the table above are those when f_{PRS} = f_{XH} (XSEL = 1).)

Notes 2. If the peripheral hardware clock (f_{PRS}) operates on the internal high-speed oscillation clock (XSEL = 0) when 1.8 V ≤ V_{DD} < 2.7 V, setting CCS3 = CCS2 = CCS1 = CCS0 = 0 (output clock of PCL: f_{PRS}) is prohibited.

3. The PCL output clock prohibits settings if they exceed 10 MHz.

Cautions 1. Set BCS1 and BCS0 when the buzzer output operation is stopped (BZOE = 0).

2. Set CCS3 to CCS0 while the clock output operation is stopped (CLOE = 0).

Remarks 1. f_{PRS}: Peripheral hardware clock frequency

2. f_{SUB}: Subsystem clock frequency

(2) Port mode register 14 (PM14)

This register sets port 14 input/output in 1-bit units.

When using the P140/INTP6/PCL pin for clock output and the P141/INTP7/BUSY0/BUZ pin for buzzer output, clear PM140 and PM141 and the output latches of P140 and P141 to 0.

PM14 is set by a 1-bit or 8-bit memory manipulation instruction.

Reset signal generation sets PM14 to FFH.

Figure 12-5. Format of Port Mode Register 14 (PM14)

Address: FF2EH After reset: FFH R/W

Symbol	7	6	5	4	3	2	1	0
PM14	1	1	PM145	PM144	PM143	PM142	PM141	PM140

PM14n	P14n pin I/O mode selection (n = 0 to 5)
0	Output mode (output buffer on)
1	Input mode (output buffer off)

Remark The figure shown above presents the format of port mode register 14 of 78K0/KF2 products. For the format of port mode register 14 of other products, see **(1) Port mode registers (PMxx)** in **5.3 Registers Controlling Port Function**.

12.4 Operations of Clock Output/Buzzer Output Controller

12.4.1 Operation as clock output

The clock pulse is output as the following procedure.

<1> Select the clock pulse output frequency with bits 0 to 3 (CCS0 to CCS3) of the clock output selection register (CKS) (clock pulse output in disabled status).
<2> Set bit 4 (CLOE) of CKS to 1 to enable clock output.

Remark The clock output controller is designed not to output pulses with a small width during output enable/disable switching of the clock output. As shown in Figure 12-6, be sure to start output from the low period of the clock (marked with * in the figure). When stopping output, do so after the high-level period of the clock.

Figure 12-6. Remote Control Output Application Example

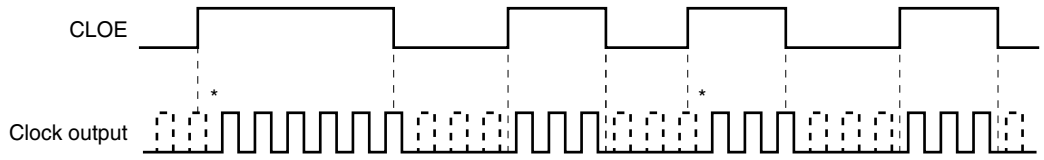

12.4.2 Operation as buzzer output

The buzzer frequency is output as the following procedure.

<1> Select the buzzer output frequency with bits 5 and 6 (BCS0, BCS1) of the clock output selection register (CKS) (buzzer output in disabled status).
<2> Set bit 7 (BZOE) of CKS to 1 to enable buzzer output.

CHAPTER 13 A/D CONVERTER

	78K0/KB2	78K0/KC2	78K0/KD2	78K0/KE2	78K0/KF2
10-bit A/D converter	4 ch	38 pins: 6 ch 44/48 pins: 8 ch	8 ch		

13.1 Function of A/D Converter

The A/D converter converts an analog input signal into a digital value, and consists of up to eight channels (ANI0 to ANI7) with a resolution of 10 bits.

The A/D converter has the following function.

- **10-bit resolution A/D conversion**

  10-bit resolution A/D conversion is carried out repeatedly for one analog input channel selected from ANI0 to ANI7. Each time an A/D conversion operation ends, an interrupt request (INTAD) is generated.

Figure 13-1. Block Diagram of A/D Converter

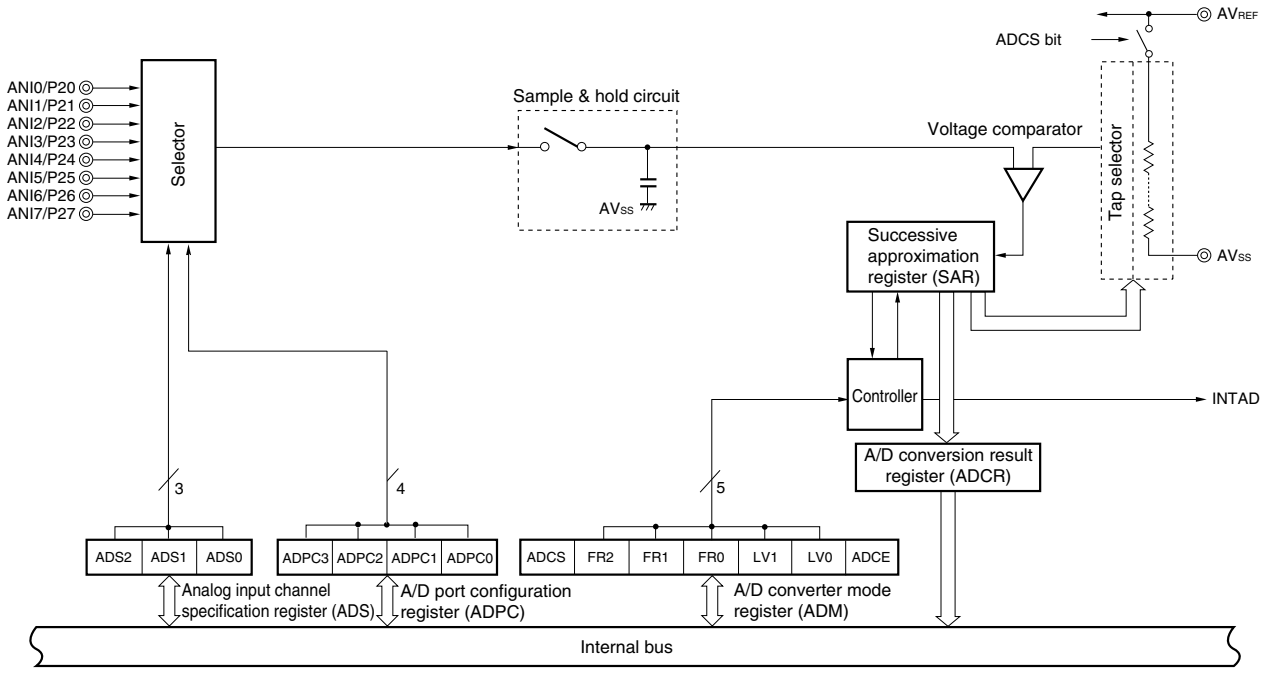

Remark ANI0 to ANI3: 78K0/KB2
ANI0 to ANI5: 38-pin products of the 78K0/KC2
ANI0 to ANI7: Products other than above

13.2 Configuration of A/D Converter

The A/D converter includes the following hardware.

(1) ANI0 to ANI7 pins

These are the analog input pins of the 8-channel A/D converter. They input analog signals to be converted into digital signals. Pins other than the one selected as the analog input pin can be used as I/O port pins.

Remark ANI0 to ANI3: 78K0/KB2
ANI0 to ANI5: 38-pin products of the 78K0/KC2
ANI0 to ANI7: Products other than above

(2) Sample & hold circuit

The sample & hold circuit samples the input voltage of the analog input pin selected by the selector when A/D conversion is started, and holds the sampled voltage value during A/D conversion.

(3) Series resistor string

The series resistor string is connected between AV_{REF} and AV_{SS}, and generates a voltage to be compared with the sampled voltage value.

Figure 13-2. Circuit Configuration of Series Resistor String

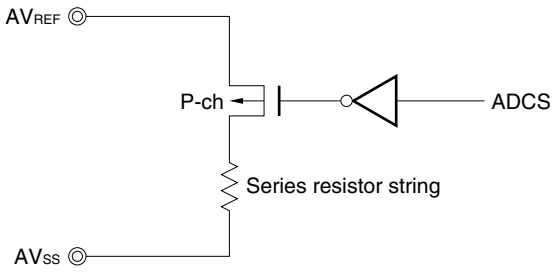

(4) Voltage comparator

The voltage comparator compares the sampled voltage value and the output voltage of the series resistor string.

(5) Successive approximation register (SAR)

This register converts the result of comparison by the voltage comparator, starting from the most significant bit (MSB). When the voltage value is converted into a digital value down to the least significant bit (LSB) (end of A/D conversion), the contents of the SAR register are transferred to the A/D conversion result register (ADCR).

(6) 10-bit A/D conversion result register (ADCR)

The A/D conversion result is loaded from the successive approximation register to this register each time A/D conversion is completed, and the ADCR register holds the A/D conversion result in its higher 10 bits (the lower 6 bits are fixed to 0).

(7) 8-bit A/D conversion result register (ADCRH)

The A/D conversion result is loaded from the successive approximation register to this register each time A/D conversion is completed, and the ADCRH register stores the higher 8 bits of the A/D conversion result.

Caution When data is read from ADCR and ADCRH, a wait cycle is generated. Do not read data from ADCR and ADCRH when the peripheral hardware clock (f_{PRS}) is stopped. For details, see CHAPTER 36 CAUTIONS FOR WAIT.

(8) Controller

This circuit controls the conversion time of an input analog signal that is to be converted into a digital signal, as well as starting and stopping of the conversion operation. When A/D conversion has been completed, this controller generates INTAD.

(9) AV_{REF} pin

This pin inputs an analog power/reference voltage to the A/D converter. Make this pin the same potential as the V_{DD} pin when port 2 is used as a digital port.

The signal input to ANI0 to ANI7 is converted into a digital signal, based on the voltage applied across AV_{REF} and AV_{SS}.

(10) AV_{SS} pin

This is the ground potential pin of the A/D converter. Always use this pin at the same potential as that of the V_{SS} pin even when the A/D converter is not used.

(11) A/D converter mode register (ADM)

This register is used to set the conversion time of the analog input signal to be converted, and to start or stop the conversion operation.

(12) A/D port configuration register (ADPC)

This register switches the ANI0/P20 to ANI7/P27 pins to analog input of A/D converter or digital I/O of port.

(13) Analog input channel specification register (ADS)

This register is used to specify the port that inputs the analog voltage to be converted into a digital signal.

(14) Port mode register 2 (PM2)

This register switches the ANI0/P20 to ANI7/P27 pins to input or output.

Remark ANI0 to ANI3: 78K0/KB2
ANI0 to ANI5: 38-pin products of the 78K0/KC2
ANI0 to ANI7: Products other than above

13.3 Registers Used in A/D Converter

The A/D converter uses the following six registers.

- A/D converter mode register (ADM)
- A/D port configuration register (ADPC)
- Analog input channel specification register (ADS)
- Port mode register 2 (PM2)
- 10-bit A/D conversion result register (ADCR)
- 8-bit A/D conversion result register (ADCRH)

(1) A/D converter mode register (ADM)

This register sets the conversion time for analog input to be A/D converted, and starts/stops conversion.
ADM can be set by a 1-bit or 8-bit memory manipulation instruction.
Reset signal generation clears this register to 00H.

Figure 13-3. Format of A/D Converter Mode Register (ADM)

Address: FF28H After reset: 00H R/W

Symbol	<7>	6	5	4	3	2	1	<0>
ADM	ADCS	0	FR2 Note 1	FR1 Note 1	FR0 Note 1	LV1 Note 1	LV0 Note 1	ADCE

ADCS	A/D conversion operation control
0	Stops conversion operation
1	Enables conversion operation

ADCE	Comparator operation control Note 2
0	Stops comparator operation
1	Enables comparator operation

Notes 1. For details of FR2 to FR0, LV1, LV0, and A/D conversion, see **Table 13-2 A/D Conversion Time Selection (Conventional-specification Products (μPD78F05xx and 78F05xxD))**, and **Table 13-3 A/D Conversion Time Selection (Expanded-specification Products (μPD78F05xxA and 78F05xxDA))**.

2. The operation of the comparator is controlled by ADCS and ADCE, and it takes 1 μs from operation start to operation stabilization. Therefore, when ADCS is set to 1 after 1 μs or more has elapsed from the time ADCE is set to 1, the conversion result at that time has priority over the first conversion result. Otherwise, ignore data of the first conversion.

Table 13-1. Settings of ADCS and ADCE

ADCS	ADCE	A/D Conversion Operation
0	0	Stop status (DC power consumption path does not exist)
0	1	Conversion waiting mode (comparator operation, only comparator consumes power)
1	0	Conversion mode (comparator operation stopped Note)
1	1	Conversion mode (comparator operation)

Note Ignore the first conversion data.

Figure 13-4. Timing Chart When Comparator Is Used

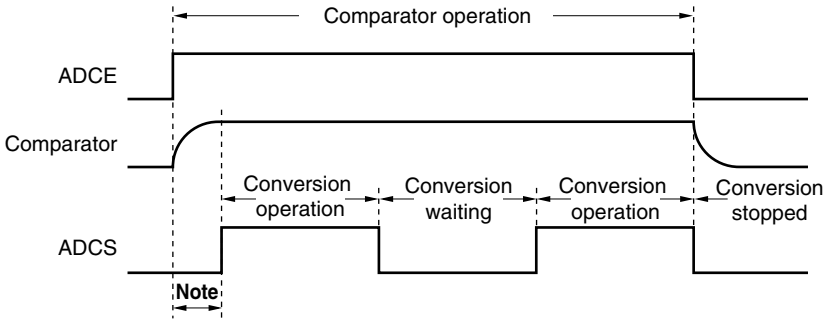

Note To stabilize the internal circuit, the time from the rising of the ADCE bit to the falling of the ADCS bit must be 1 μs or longer.

Cautions 1. A/D conversion must be stopped before rewriting bits FR0 to FR2, LV1, and LV0 to values other than the identical data.

2. If data is written to ADM, a wait cycle is generated. Do not write data to ADM when the peripheral hardware clock (f_{PRS}) is stopped. For details, see CHAPTER 36 CAUTIONS FOR WAIT.

Table 13-2. A/D Conversion Time Selection (Conventional-specification Products (μPD78F05xx and 78F05xxD))

(1) 2.7 V ≤ AV_{REF} ≤ 5.5 V (LV0 = 0)

A/D Converter Mode Register (ADM)					Conversion Time Selection				Conversion Clock (f_{AD})
FR2	FR1	FR0	LV1	LV0		f_{PRS} = 2 MHz	f_{PRS} = 10 MHz	f_{PRS} = 20 MHz[Note]	
0	0	0	0	0	264/f_{PRS}	Setting prohibited	26.4 μs	13.2 μs[Note]	f_{PRS}/12
0	0	1	0	0	176/f_{PRS}		17.6 μs	8.8 μs[Note]	f_{PRS}/8
0	1	0	0	0	132/f_{PRS}		13.2 μs	6.6 μs[Note]	f_{PRS}/6
0	1	1	0	0	88/f_{PRS}		8.8 μs[Note]	Setting prohibited	f_{PRS}/4
1	0	0	0	0	66/f_{PRS}	33.0 μs	6.6 μs[Note]		f_{PRS}/3
1	0	1	0	0	44/f_{PRS}	22.0 μs	Setting prohibited		f_{PRS}/2
Other than above					Setting prohibited				

Note This can be set only when 4.0 V ≤ AV_{REF} ≤ 5.5 V.

(2) 2.3 V ≤ AV_{REF} < 2.7 V (LV0 = 1)

A/D Converter Mode Register (ADM)					Conversion Time Selection			Conversion Clock (f_{AD})
FR2	FR1	FR0	LV1	LV0		f_{PRS} = 2 MHz	f_{PRS} = 5 MHz	
0	0	0	0	1	480/f_{PRS}	Setting prohibited	Setting prohibited	f_{PRS}/12
0	0	1	0	1	320/f_{PRS}		64.0 μs	f_{PRS}/8
0	1	0	0	1	240/f_{PRS}		48.0 μs	f_{PRS}/6
0	1	1	0	1	160/f_{PRS}		32.0 μs	f_{PRS}/4
1	0	0	0	1	120/f_{PRS}	60.0 μs	Setting prohibited	f_{PRS}/3
1	0	1	0	1	80/f_{PRS}	40.0 μs	Setting prohibited	f_{PRS}/2
Other than above					Setting prohibited			

Cautions 1. Set the conversion times with the following conditions.

- **4.0 V ≤ AV_{REF} ≤ 5.5 V: f_{AD} = 0.6 to 3.6 MHz**
- **2.7 V ≤ AV_{REF} < 4.0 V: f_{AD} = 0.6 to 1.8 MHz**
- **2.3 V ≤ AV_{REF} < 2.7 V: f_{AD} = 0.6 to 1.48 MHz (Standard products and (A) grade products only)**

2. When rewriting FR2 to FR0, LV1, and LV0 to other than the same data, stop A/D conversion once (ADCS = 0) beforehand.

3. Change LV0 from the default value, when 2.3 V ≤ AV_{REF} < 2.7 V.

4. The above conversion time does not include clock frequency errors. Select conversion time, taking clock frequency errors into consideration.

Remark f_{PRS}: Peripheral hardware clock frequency

Table 13-3. A/D Conversion Time Selection (Expanded-specification Products (μPD78F05xxA and 78F05xxDA))

(1) 2.7 V ≤ AV_{REF} ≤ 5.5 V (LV0 = 0)

A/D Converter Mode Register (ADM)					Conversion Time Selection					Conversion Clock (f_{AD})
FR2	FR1	FR0	LV1	LV0		f_{PRS} = 2 MHz	f_{PRS} = 5 MHz	f_{PRS} = 10 MHz	f_{PRS} = 20 MHz	
0	0	0	0	0	264/f_{PRS}	Setting prohibited	52.8 μs	26.4 μs	13.2 μs	f_{PRS}/12
0	0	1	0	0	176/f_{PRS}		35.2 μs	17.6 μs	8.8 μs Note	f_{PRS}/8
0	1	0	0	0	132/f_{PRS}	66.0 μs	26.4 μs	13.2 μs	6.6 μs Note	f_{PRS}/6
0	1	1	0	0	88/f_{PRS}	44.0 μs	17.6 μs	8.8 μs Note	Setting prohibited	f_{PRS}/4
1	0	0	0	0	66/f_{PRS}	33.0 μs	13.2 μs	6.6 μs Note		f_{PRS}/3
1	0	1	0	0	44/f_{PRS}	22.0 μs	8.8 μs Note	Setting prohibited		f_{PRS}/2
Other than above					Setting prohibited					

Note This can be set only when 4.0 V ≤ AV_{REF} ≤ 5.5 V.

(2) 2.3 V ≤ AV_{REF} ≤ 5.5 V (LV0 = 1)

A/D Converter Mode Register (ADM)					Conversion Time Selection					Conversion Clock (f_{AD})
FR2	FR1	FR0	LV1	LV0		f_{PRS} = 2 MHz	f_{PRS} = 5 MHz	f_{PRS} = 10 MHz	f_{PRS} = 20 MHz	
0	0	0	0	1	480/f_{PRS}	Setting prohibited	Setting prohibited	48.0 μs Note 2	24.0 μs Note 2	f_{PRS}/12
0	0	1	0	1	320/f_{PRS}		64.0 μs	32.0 μs Note 2	16.0 μs Note 1	f_{PRS}/8
0	1	0	0	1	240/f_{PRS}		48.0 μs	24.0 μs Note 2	12.0 μs Note 1	f_{PRS}/6
0	1	1	0	1	160/f_{PRS}		32.0 μs	16.0 μs Note 1	Setting prohibited	f_{PRS}/4
1	0	0	0	1	120/f_{PRS}	60.0 μs	24.0 μs Note 2	12.0 μs Note 1		f_{PRS}/3
1	0	1	0	1	80/f_{PRS}	40.0 μs	16.0 μs Note 1	Setting prohibited		f_{PRS}/2
Other than above					Setting prohibited					

Notes 1. This can be set only when 4.0 V ≤ AV_{REF} ≤ 5.5 V.

2. This can be set only when 2.7 V ≤ AV_{REF} ≤ 5.5 V.

Cautions 1. Set the conversion times with the following conditions.

(1) 2.7 V ≤ AV_{REF} ≤ 5.5 V (LV0 = 0)

- **4.0 V ≤ AV_{REF} ≤ 5.5 V: f_{AD} = 0.33 to 3.6 MHz**
- **2.7 V ≤ AV_{REF} < 4.0 V: f_{AD} = 0.33 to 1.8 MHz**

(2) 2.3 V ≤ AV_{REF} ≤ 5.5 V (LV0 = 1)

- **4.0 V ≤ AV_{REF} ≤ 5.5 V: f_{AD} = 0.6 to 3.6 MHz**
- **2.7 V ≤ AV_{REF} < 4.0 V: f_{AD} = 0.6 to 1.8 MHz**
- **2.3 V ≤ AV_{REF} < 2.7 V: f_{AD} = 0.6 to 1.48 MHz (Standard products and (A) grade products only)**

2. When rewriting FR2 to FR0, LV1, and LV0 to other than the same data, stop A/D conversion once (ADCS = 0) beforehand.

3. Change LV0 from the default value, when 2.3 V ≤ AV_{REF} < 2.7 V.

4. The above conversion time does not include clock frequency errors. Select conversion time, taking clock frequency errors into consideration.

Remark f_{PRS}: Peripheral hardware clock frequency

Figure 13-5. A/D Converter Sampling and A/D Conversion Timing

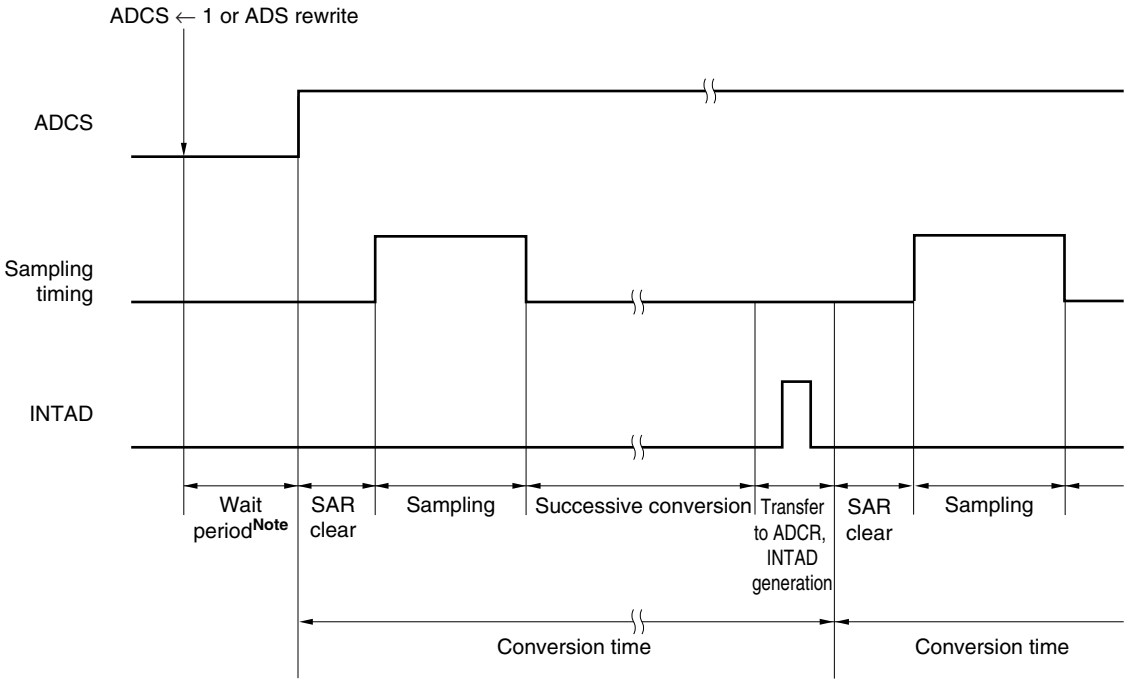

Note For details of wait period, see **CHAPTER 36 CAUTIONS FOR WAIT**.

(2) 10-bit A/D conversion result register (ADCR)

This register is a 16-bit register that stores the A/D conversion result. The lower 6 bits are fixed to 0. Each time A/D conversion ends, the conversion result is loaded from the successive approximation register. The higher 8 bits of the conversion result are stored in FF09H and the lower 2 bits are stored in the higher 2 bits of FF08H.

ADCR can be read by a 16-bit memory manipulation instruction.

Reset signal generation clears this register to 0000H.

Figure 13-6. Format of 10-Bit A/D Conversion Result Register (ADCR)

Address: FF08H, FF09H After reset: 0000H R

Symbol	FF09H								FF08H							
ADCR											0	0	0	0	0	0

Cautions 1. When writing to the A/D converter mode register (ADM), analog input channel specification register (ADS), and A/D port configuration register (ADPC), the contents of ADCR may become undefined. Read the conversion result following conversion completion before writing to ADM, ADS, and ADPC. Using timing other than the above may cause an incorrect conversion result to be read.

2. If data is read from ADCR, a wait cycle is generated. Do not read data from ADCR when the peripheral hardware clock (f_{PRS}) is stopped. For details, see CHAPTER 36 CAUTIONS FOR WAIT.

(3) 8-bit A/D conversion result register (ADCRH)

This register is an 8-bit register that stores the A/D conversion result. The higher 8 bits of 10-bit resolution are stored.

ADCRH can be read by an 8-bit memory manipulation instruction.

Reset signal generation clears this register to 00H.

Figure 13-7. Format of 8-Bit A/D Conversion Result Register (ADCRH)

Address: FF09H After reset: 00H R

Symbol	7	6	5	4	3	2	1	0
ADCRH								

Cautions 1. When writing to the A/D converter mode register (ADM), analog input channel specification register (ADS), and A/D port configuration register (ADPC), the contents of ADCRH may become undefined. Read the conversion result following conversion completion before writing to ADM, ADS, and ADPC. Using timing other than the above may cause an incorrect conversion result to be read.

2. If data is read from ADCRH, a wait cycle is generated. Do not read data from ADCRH when the peripheral hardware clock (f_{PRS}) is stopped. For details, see CHAPTER 36 CAUTIONS FOR WAIT.

(4) Analog input channel specification register (ADS)

This register specifies the input channel of the analog voltage to be A/D converted.

ADS can be set by a 1-bit or 8-bit memory manipulation instruction.

Reset signal generation clears this register to 00H.

Remark ANI0 to ANI3: 78K0/KB2
ANI0 to ANI5: 38-pin products of the 78K0/KC2
ANI0 to ANI7: Products other than above

Figure 13-8. Format of Analog Input Channel Specification Register (ADS)

Address: FF29H After reset: 00H R/W

Symbol	7	6	5	4	3	2	1	0
ADS	0	0	0	0	0	ADS2	ADS1	ADS0

Products other than the right / 38-pin products of KC2 / KB2

ADS2	ADS1	ADS0	Analog input channel specification
0	0	0	ANI0
0	0	1	ANI1
0	1	0	ANI2
0	1	1	ANI3
1	0	0	ANI4
1	0	1	ANI5
1	1	0	ANI6
1	1	1	ANI7

Note 1 (Products other than the right)
Note 1 (38-pin products of KC2)
Note 2 (38-pin products of KC2)
Note 1 (KB2)
Note 2 (KB2)

Notes 1. Setting permitted
2. Setting prohibited

Cautions 1. Be sure to clear bits 3 to 7 to "0".
2 Set a channel to be used for A/D conversion in the input mode by using port mode register 2 (PM2).
3. If data is written to ADS, a wait cycle is generated. Do not write data to ADS when the peripheral hardware clock (f_{PRS}) is stopped. For details, see CHAPTER 36 CAUTIONS FOR WAIT.

(5) A/D port configuration register (ADPC)

This register switches the ANI0/P20 to ANI7/P27 pins to analog input of A/D converter or digital I/O of port.

ADPC can be set by a 1-bit or 8-bit memory manipulation instruction.

Reset signal generation clears this register to 00H.

Remark ANI0 to ANI3: 78K0/KB2
ANI0 to ANI5: 38-pin products of the 78K0/KC2
ANI0 to ANI7: Products other than above

Figure 13-9. Format of A/D Port Configuration Register (ADPC)

Address: FF2FH After reset: 00H R/W

Symbol	7	6	5	4	3	2	1	0
ADPC	0	0	0	0	ADPC3	ADPC2	ADPC1	ADPC0

Products other than the right: Note 1
38-pin products of KC2: Note 1, Note 2
KB2: Note 1, Note 2

ADPC3	ADPC2	ADPC1	ADPC0	Digital I/O (D)/analog input (A) switching							
				P27/ ANI7	P26/ ANI6	P25/ ANI5	P24/ ANI4	P23/ ANI3	P22/ ANI2	P21/ ANI1	P20/ ANI0
0	0	0	0	A	A	A	A	A	A	A	A
0	0	0	1	A	A	A	A	A	A	A	D
0	0	1	0	A	A	A	A	A	A	D	D
0	0	1	1	A	A	A	A	A	D	D	D
0	1	0	0	A	A	A	A	D	D	D	D
0	1	0	1	A	A	A	D	D	D	D	D
0	1	1	0	A	A	D	D	D	D	D	D
0	1	1	1	A	D	D	D	D	D	D	D
1	0	0	0	D	D	D	D	D	D	D	D
Other than above				Setting prohibited							

Notes 1. Setting permitted
2. Setting prohibited

Cautions 1. Set a channel to be used for A/D conversion in the input mode by using port mode register 2 (PM2).
2. If data is written to ADPC, a wait cycle is generated. Do not write data to ADPC when the peripheral hardware clock (f_{PRS}) is stopped. For details, see CHAPTER 36 CAUTIONS FOR WAIT.

(6) Port mode register 2 (PM2)

When using the ANI0/P20 to ANI7/P27 pins for analog input port, set PM20 to PM27 to 1. The output latches of P20 to P27 at this time may be 0 or 1.

If PM20 to PM27 are set to 0, they cannot be used as analog input port pins.

PM2 can be set by a 1-bit or 8-bit memory manipulation instruction.

Reset signal generation sets this register to FFH.

Remark ANI0 to ANI3: 78K0/KB2
ANI0 to ANI5: 38-pin products of the 78K0/KC2
ANI0 to ANI7: Products other than above

Figure 13-10. Format of Port Mode Register 2 (PM2)

Address: FF22H After reset: FFH R/W

Symbol	7	6	5	4	3	2	1	0
PM2	PM27	PM26	PM25	PM24	PM23	PM22	PM21	PM20

PM2n	P2n pin I/O mode selection (n = 0 to 7)
0	Output mode (output buffer on)
1	Input mode (output buffer off)

Caution For the 38-pin products of 78K0/KC2, be sure to set bits 6 and 7 of PM2 to "1", and bits 6 and 7 of P2 to "0".

Remark The format of port mode register 2 of 78K0/KB2 products is different from the above format. See **5.3 Registers Controlling Port Function (1) Port mode registers (PMxx)**.

ANI0/P20 to ANI7/P27 pins are as shown below depending on the settings of ADPC, ADS, and PM2.

Table 13-4. Setting Functions of ANI0/P20 to ANI7/P27 Pins

ADPC	PM2	ADS	ANI0/P20 to ANI7/P27 Pins
Analog input selection	Input mode	Selects ANI.	Analog input (to be converted)
		Does not select ANI.	Analog input (not to be converted)
	Output mode	Selects ANI.	Setting prohibited
		Does not select ANI.	
Digital I/O selection	Input mode	–	Digital input
	Output mode	–	Digital output

13.4 A/D Converter Operations

13.4.1 Basic operations of A/D converter

<1> Set bit 0 (ADCE) of the A/D converter mode register (ADM) to 1 to start the operation of the comparator.

<2> Set channels for A/D conversion to analog input by using the A/D port configuration register (ADPC) and set to input mode by using port mode register 2 (PM2).

<3> Set A/D conversion time by using bits 5 to 1 (FR2 to FR0, LV1, and LV0) of ADM.

<4> Select one channel for A/D conversion using the analog input channel specification register (ADS).

<5> Start the conversion operation by setting bit 7 (ADCS) of ADM to 1.
(<6> to <12> are operations performed by hardware.)

<6> The voltage input to the selected analog input channel is sampled by the sample & hold circuit.

<7> When sampling has been done for a certain time, the sample & hold circuit is placed in the hold state and the sampled voltage is held until the A/D conversion operation has ended.

<8> Bit 9 of the successive approximation register (SAR) is set. The series resistor string voltage tap is set to (1/2) AV_{REF} by the tap selector.

<9> The voltage difference between the series resistor string voltage tap and sampled voltage is compared by the voltage comparator. If the analog input is greater than (1/2) AV_{REF}, the MSB of SAR remains set to 1. If the analog input is smaller than (1/2) AV_{REF}, the MSB is reset to 0.

<10> Next, bit 8 of SAR is automatically set to 1, and the operation proceeds to the next comparison. The series resistor string voltage tap is selected according to the preset value of bit 9, as described below.

- Bit 9 = 1: (3/4) AV_{REF}
- Bit 9 = 0: (1/4) AV_{REF}

The voltage tap and sampled voltage are compared and bit 8 of SAR is manipulated as follows.

- Analog input voltage ≥ Voltage tap: Bit 8 = 1
- Analog input voltage < Voltage tap: Bit 8 = 0

<11> Comparison is continued in this way up to bit 0 of SAR.

<12> Upon completion of the comparison of 10 bits, an effective digital result value remains in SAR, and the result value is transferred to the A/D conversion result register (ADCR, ADCRH) and then latched.
At the same time, the A/D conversion end interrupt request (INTAD) can also be generated.

<13> Repeat steps <6> to <12>, until ADCS is cleared to 0.
To stop the A/D converter, clear ADCS to 0.
To restart A/D conversion from the status of ADCE = 1, start from <5>. To start A/D conversion again when ADCE = 0, set ADCE to 1, wait for 1 μs or longer, and start <5>. To change a channel of A/D conversion, start from <4>.

Caution Make sure the period of <1> to <5> is 1 μs or more.

Remark Two types of A/D conversion result registers are available.
- ADCR (16 bits): Store 10-bit A/D conversion value
- ADCRH (8 bits): Store 8-bit A/D conversion value

Figure 13-11. Basic Operation of A/D Converter

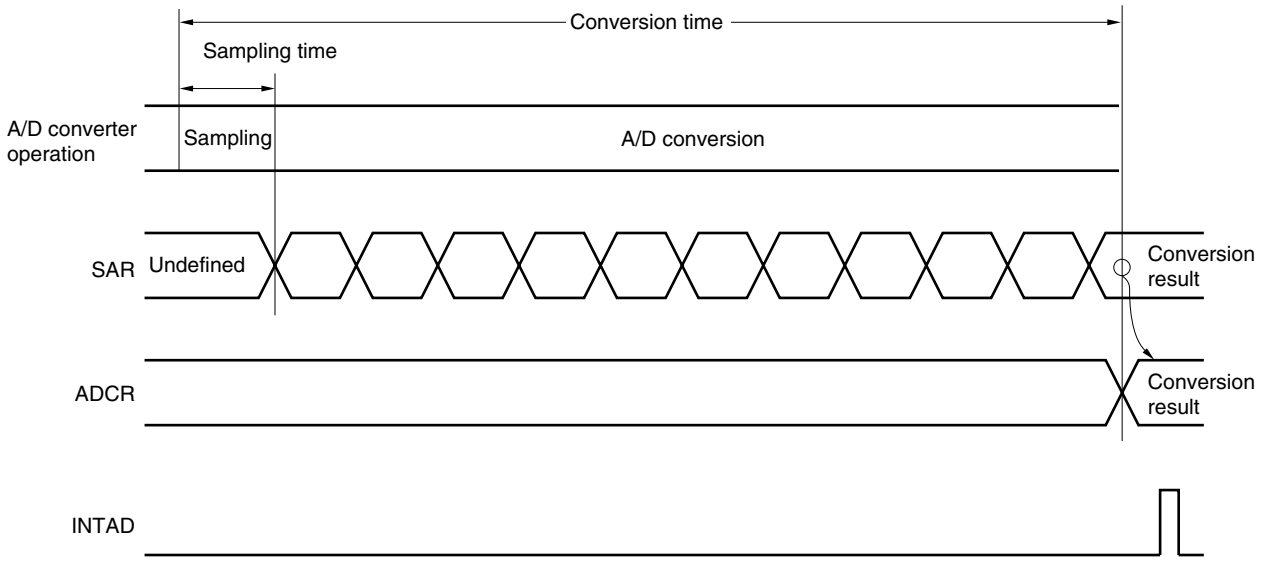

A/D conversion operations are performed continuously until bit 7 (ADCS) of the A/D converter mode register (ADM) is reset (0) by software.

If a write operation is performed to the analog input channel specification register (ADS) during an A/D conversion operation, the conversion operation is initialized, and if the ADCS bit is set (1), conversion starts again from the beginning.

Reset signal generation clears the A/D conversion result register (ADCR, ADCRH) to 0000H or 00H.

13.4.2 Input voltage and conversion results

The relationship between the analog input voltage input to the analog input pins (ANI0 to ANI7) and the theoretical A/D conversion result (stored in the 10-bit A/D conversion result register (ADCR)) is shown by the following expression.

$$SAR = INT\left(\frac{V_{AIN}}{AV_{REF}} \times 1024 + 0.5\right)$$

$$ADCR = SAR \times 64$$

or

$$\left(\frac{ADCR}{64} - 0.5\right) \times \frac{AV_{REF}}{1024} \leq V_{AIN} < \left(\frac{ADCR}{64} + 0.5\right) \times \frac{AV_{REF}}{1024}$$

where, INT( ): Function which returns integer part of value in parentheses

V_{AIN}: Analog input voltage

AV_{REF}: AV_{REF} pin voltage

ADCR: A/D conversion result register (ADCR) value

SAR: Successive approximation register

Remark ANI0 to ANI3: 78K0/KB2

ANI0 to ANI5: 38-pin products of the 78K0/KC2

ANI0 to ANI7: Products other than above

Figure 13-12 shows the relationship between the analog input voltage and the A/D conversion result.

Figure 13-12. Relationship Between Analog Input Voltage and A/D Conversion Result

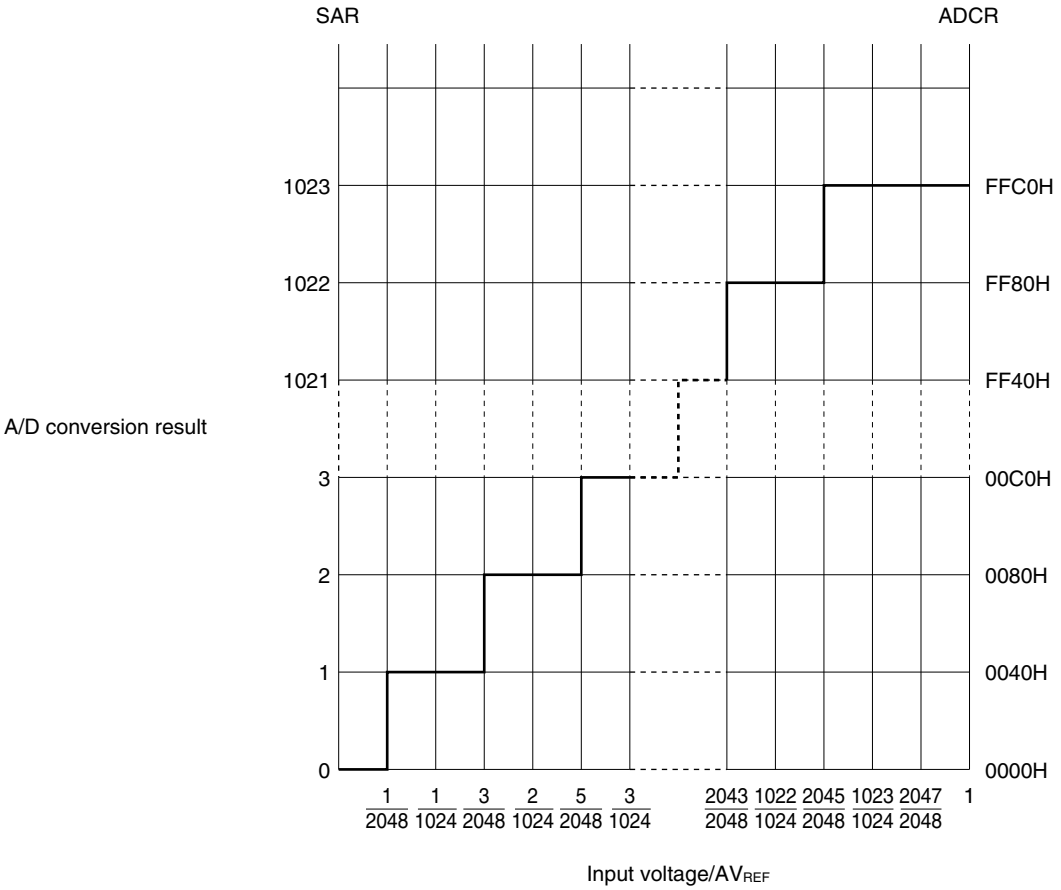

13.4.3 A/D converter operation mode

The operation mode of the A/D converter is the select mode. One channel of analog input is selected from ANI0 to ANI7 by the analog input channel specification register (ADS) and A/D conversion is executed.

Remark ANI0 to ANI3: 78K0/KB2
ANI0 to ANI5: 38-pin products of the 78K0/KC2
ANI0 to ANI7: Products other than above

(1) A/D conversion operation

By setting bit 7 (ADCS) of the A/D converter mode register (ADM) to 1, the A/D conversion operation of the voltage, which is applied to the analog input pin specified by the analog input channel specification register (ADS), is started.

When A/D conversion has been completed, the result of the A/D conversion is stored in the A/D conversion result register (ADCR), and an interrupt request signal (INTAD) is generated. When one A/D conversion has been completed, the next A/D conversion operation is immediately started.

If ADS is rewritten during A/D conversion, the A/D conversion operation under execution is stopped and restarted from the beginning.

If 0 is written to ADCS during A/D conversion, A/D conversion is immediately stopped. At this time, the conversion result immediately before is retained.

Figure 13-13. A/D Conversion Operation

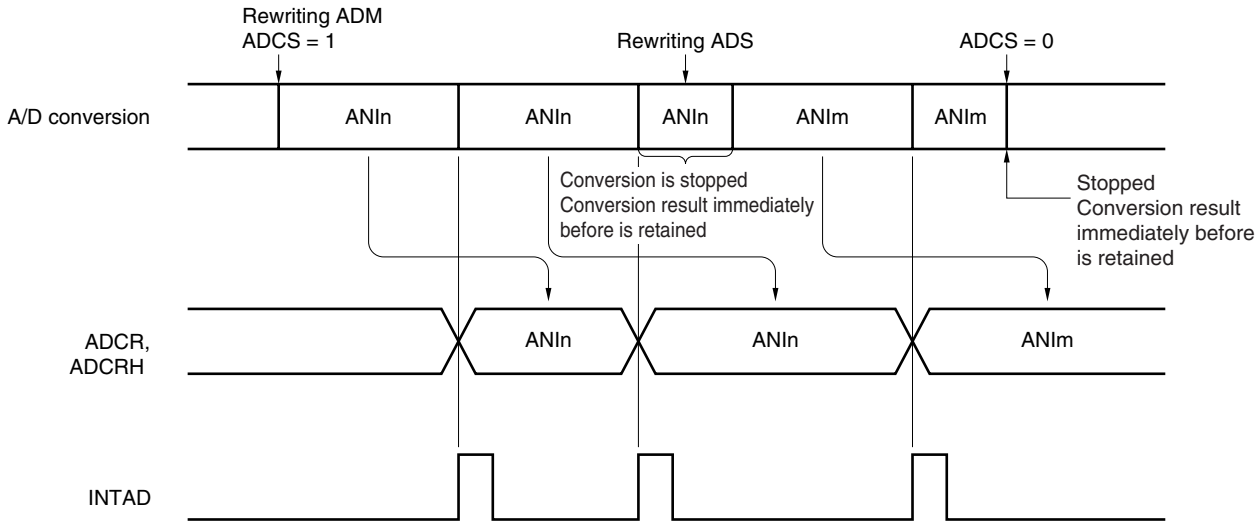

Remarks 1. 78K0/KB2: n = 0 to 3, 38-pin products of the 78K0/KC2: n = 0 to 5, other products: n = 0 to 7

2. 78K0/KB2: m = 0 to 3, 38-pin products of the 78K0/KC2: m = 0 to 5, other products: m = 0 to 7

The setting methods are described below.

<1> Set bit 0 (ADCE) of the A/D converter mode register (ADM) to 1.
<2> Set the channel to be used in the analog input mode by using bits 3 to 0 (ADPC3 to ADPC0) of the A/D port configuration register (ADPC) and bits 7 to 0 (PM27 to PM20) of port mode register 2 (PM2).
<3> Select conversion time by using bits 5 to 1 (FR2 to FR0, LV1, and LV0) of ADM.
<4> Select a channel to be used by using bits 2 to 0 (ADS2 to ADS0) of the analog input channel specification register (ADS).
<5> Set bit 7 (ADCS) of ADM to 1 to start A/D conversion.
<6> When one A/D conversion has been completed, an interrupt request signal (INTAD) is generated.
<7> Transfer the A/D conversion data to the A/D conversion result register (ADCR, ADCRH).

<Change the channel>

<8> Change the channel using bits 2 to 0 (ADS2 to ADS0) of ADS to start A/D conversion.
<9> When one A/D conversion has been completed, an interrupt request signal (INTAD) is generated.
<10> Transfer the A/D conversion data to the A/D conversion result register (ADCR, ADCRH).

<Complete A/D conversion>

<11> Clear ADCS to 0.
<12> Clear ADCE to 0.

Cautions 1. Make sure the period of <1> to <5> is 1 μs or more.
2. <1> may be done between <2> and <4>.
3. <1> can be omitted. However, ignore data of the first conversion after <5> in this case.
4. The period from <6> to <9> differs from the conversion time set using bits 5 to 1 (FR2 to FR0, LV1, LV0) of ADM. The period from <8> to <9> is the conversion time set using FR2 to FR0, LV1, and LV0.

13.5 How to Read A/D Converter Characteristics Table

Here, special terms unique to the A/D converter are explained.

(1) Resolution

This is the minimum analog input voltage that can be identified. That is, the percentage of the analog input voltage per bit of digital output is called 1LSB (Least Significant Bit). The percentage of 1LSB with respect to the full scale is expressed by %FSR (Full Scale Range).

1LSB is as follows when the resolution is 10 bits.

$1LSB = 1/2^{10} = 1/1024$
$= 0.098\%FSR$

Accuracy has no relation to resolution, but is determined by overall error.

(2) Overall error

This shows the maximum error value between the actual measured value and the theoretical value.
Zero-scale error, full-scale error, integral linearity error, and differential linearity errors that are combinations of these express the overall error.
Note that the quantization error is not included in the overall error in the characteristics table.

(3) Quantization error

When analog values are converted to digital values, a ±1/2LSB error naturally occurs. In an A/D converter, an analog input voltage in a range of ±1/2LSB is converted to the same digital code, so a quantization error cannot be avoided.
Note that the quantization error is not included in the overall error, zero-scale error, full-scale error, integral linearity error, and differential linearity error in the characteristics table.

Figure 13-14. Overall Error

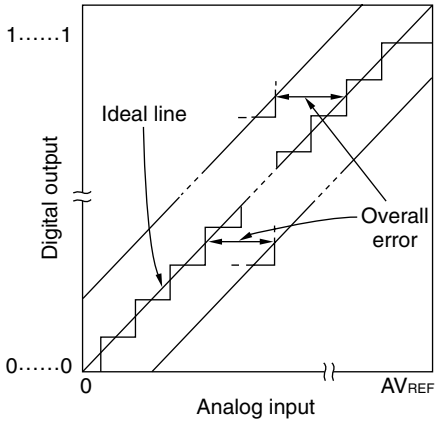

Figure 13-15. Quantization Error

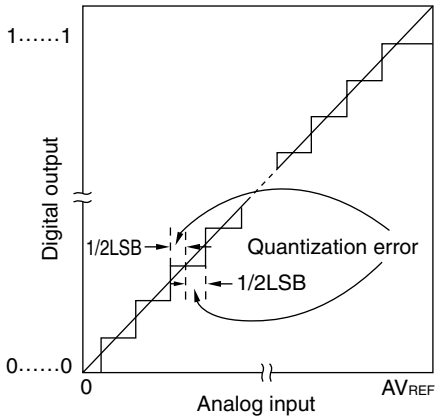

(4) Zero-scale error

This shows the difference between the actual measurement value of the analog input voltage and the theoretical value (1/2LSB) when the digital output changes from 0.....000 to 0.....001.
If the actual measurement value is greater than the theoretical value, it shows the difference between the actual measurement value of the analog input voltage and the theoretical value (3/2LSB) when the digital output changes from 0……001 to 0……010.

(5) Full-scale error

This shows the difference between the actual measurement value of the analog input voltage and the theoretical value (Full-scale – 3/2LSB) when the digital output changes from 1.....110 to 1.....111.

(6) Integral linearity error

This shows the degree to which the conversion characteristics deviate from the ideal linear relationship. It expresses the maximum value of the difference between the actual measurement value and the ideal straight line when the zero-scale error and full-scale error are 0.

(7) Differential linearity error

While the ideal width of code output is 1LSB, this indicates the difference between the actual measurement value and the ideal value.

Figure 13-16. Zero-Scale Error

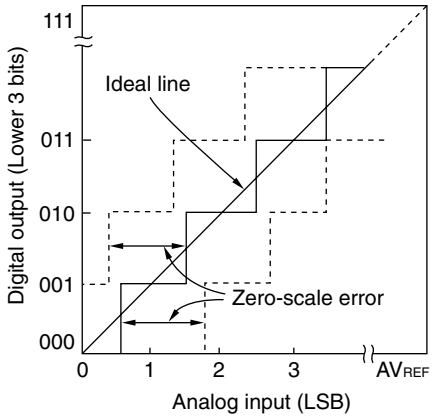

Figure 13-17. Full-Scale Error

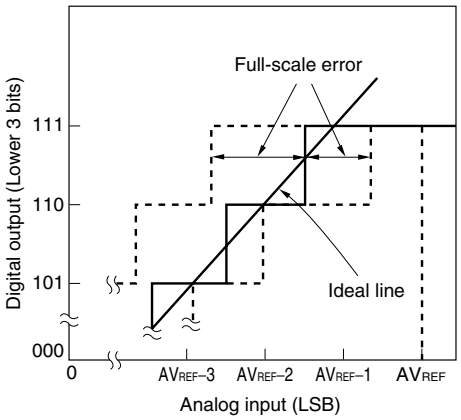

Figure 13-18. Integral Linearity Error

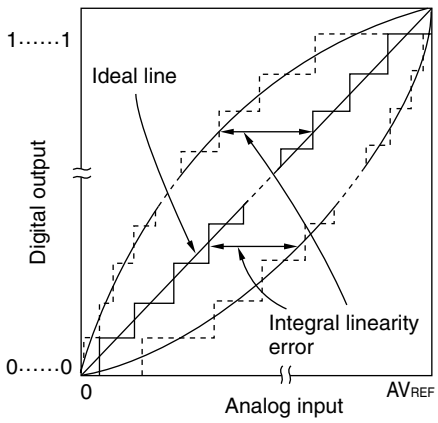

Figure 13-19. Differential Linearity Error

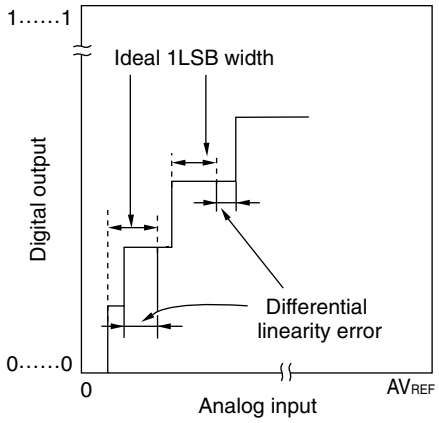

(8) Conversion time

This expresses the time from the start of sampling to when the digital output is obtained.

The sampling time is included in the conversion time in the characteristics table.

(9) Sampling time

This is the time the analog switch is turned on for the analog voltage to be sampled by the sample & hold circuit.

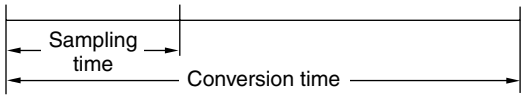

13.6 Cautions for A/D Converter

(1) Operating current in STOP mode

The A/D converter stops operating in the STOP mode. At this time, the operating current can be reduced by clearing bit 7 (ADCS) and bit 0 (ADCE) of the A/D converter mode register (ADM) to 0.

To restart from the standby status, clear bit 0 (ADIF) of interrupt request flag register 1L (IF1L) to 0 and start operation.

(2) Input range of ANI0 to ANI7

Observe the rated range of the ANI0 to ANI7 input voltage. If a voltage of AV_{REF} or higher and AV_{SS} or lower (even in the range of absolute maximum ratings) is input to an analog input channel, the converted value of that channel becomes undefined. In addition, the converted values of the other channels may also be affected.

(3) Conflicting operations

<1> Conflict between A/D conversion result register (ADCR, ADCRH) write and ADCR or ADCRH read by instruction upon the end of conversion

ADCR or ADCRH read has priority. After the read operation, the new conversion result is written to ADCR or ADCRH.

<2> Conflict between ADCR or ADCRH write and A/D converter mode register (ADM) write, analog input channel specification register (ADS), or A/D port configuration register (ADPC) write upon the end of conversion

ADM, ADS, or ADPC write has priority. ADCR or ADCRH write is not performed, nor is the conversion end interrupt signal (INTAD) generated.

(4) Noise countermeasures

To maintain the 10-bit resolution, attention must be paid to noise input to the AV_{REF} pin and pins ANI0 to ANI7.

<1> Connect a capacitor with a low equivalent resistance and a good frequency response to the power supply.

<2> The higher the output impedance of the analog input source, the greater the influence. To reduce the noise, connecting external C as shown in Figure 13-20 is recommended.

<3> Do not switch these pins with other pins during conversion.

<4> The accuracy is improved if the HALT mode is set immediately after the start of conversion.

Remark ANI0 to ANI3: 78K0/KB2
ANI0 to ANI5: 38-pin products of the 78K0/KC2
ANI0 to ANI7: Products other than above

Figure 13-20. Analog Input Pin Connection

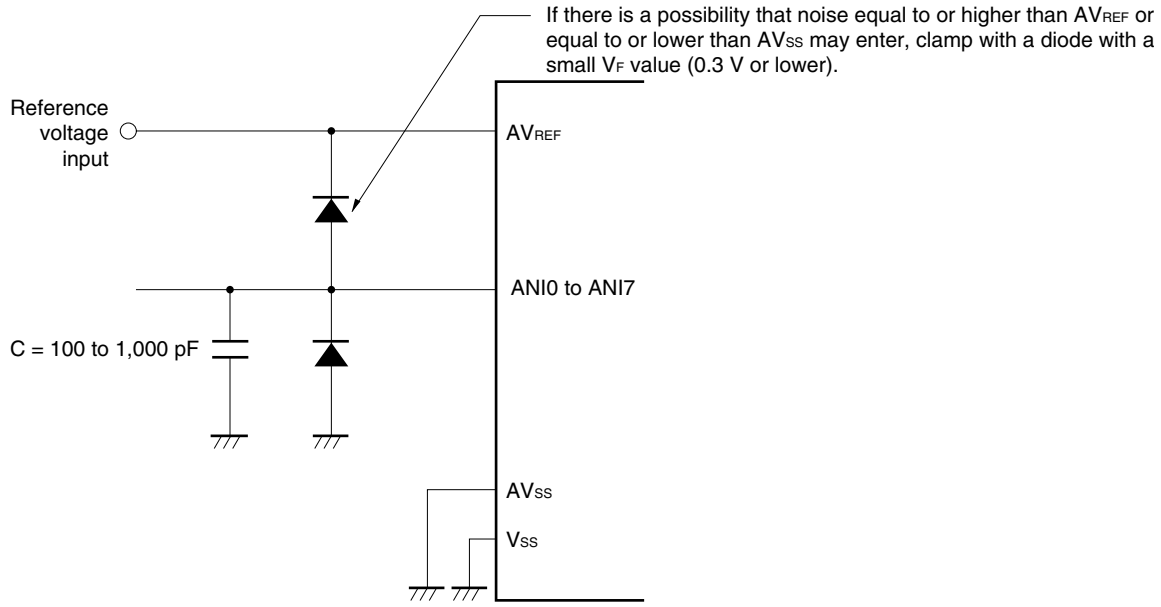

(5) ANI0/P20 to ANI7/P27

<1> The analog input pins (ANI0 to ANI7) are also used as I/O port pins (P20 to P27).
When A/D conversion is performed with any of ANI0 to ANI7 selected, do not access P20 to P27 while conversion is in progress; otherwise the conversion resolution may be degraded. It is recommended to select pins used as P20 to P27 starting with the ANI0/P20 that is the furthest from AV_{REF}.

<2> If a digital pulse is applied to the pins adjacent to the pins currently used for A/D conversion, the expected value of the A/D conversion may not be obtained due to coupling noise. Therefore, do not apply a pulse to the pins adjacent to the pin undergoing A/D conversion.

(6) Input impedance of ANI0 to ANI7 pins

This A/D converter charges a sampling capacitor for sampling during sampling time.
Therefore, only a leakage current flows when sampling is not in progress, and a current that charges the capacitor flows during sampling. Consequently, the input impedance fluctuates depending on whether sampling is in progress, and on the other states.
To make sure that sampling is effective, however, it is recommended to keep the output impedance of the analog input source to within 10 kΩ, and to connect a capacitor of about 100 pF to the ANI0 to ANI7 pins (see **Figure 13-20**).

(7) AV_{REF} pin input impedance

A series resistor string of several tens of kΩ is connected between the AV_{REF} and AV_{SS} pins.
Therefore, if the output impedance of the reference voltage source is high, this will result in a series connection to the series resistor string between the AV_{REF} and AV_{SS} pins, resulting in a large reference voltage error.

Remark ANI0 to ANI3: 78K0/KB2
ANI0 to ANI5: 38-pin products of the 78K0/KC2
ANI0 to ANI7: Products other than above

(8) Interrupt request flag (ADIF)

The interrupt request flag (ADIF) is not cleared even if the analog input channel specification register (ADS) is changed.

Therefore, if an analog input pin is changed during A/D conversion, the A/D conversion result and ADIF for the pre-change analog input may be set just before the ADS rewrite. Caution is therefore required since, at this time, when ADIF is read immediately after the ADS rewrite, ADIF is set despite the fact A/D conversion for the post-change analog input has not ended.

When A/D conversion is stopped and then resumed, clear ADIF before the A/D conversion operation is resumed.

Figure 13-21. Timing of A/D Conversion End Interrupt Request Generation

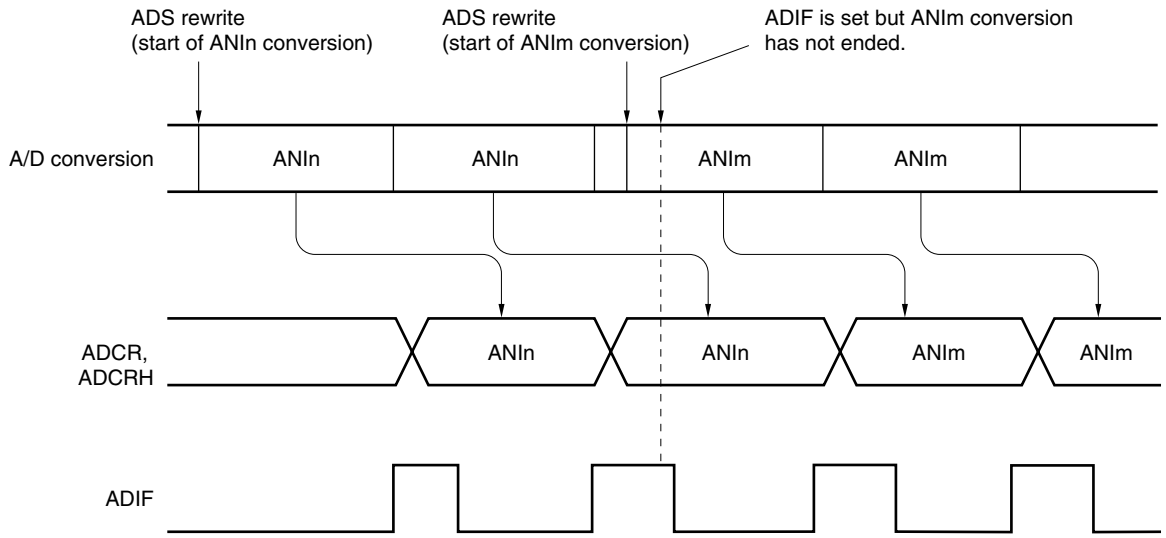

Remarks 1. 78K0/KB2: n = 0 to 3, 38-pin products of the 78K0/KC2: n = 0 to 5, other products: n = 0 to 7

2. 78K0/KB2: m = 0 to 3, 38-pin products of the 78K0/KC2: m = 0 to 5, other products: m = 0 to 7

(9) Conversion results just after A/D conversion start

The first A/D conversion value immediately after A/D conversion starts may not fall within the rating range if the ADCS bit is set to 1 within 1 μs after the ADCE bit was set to 1, or if the ADCS bit is set to 1 with the ADCE bit = 0. Take measures such as polling the A/D conversion end interrupt request (INTAD) and removing the first conversion result.

(10) A/D conversion result register (ADCR, ADCRH) read operation

When a write operation is performed to the A/D converter mode register (ADM), analog input channel specification register (ADS), and A/D port configuration register (ADPC), the contents of ADCR and ADCRH may become undefined. Read the conversion result following conversion completion before writing to ADM, ADS, and ADPC. Using a timing other than the above may cause an incorrect conversion result to be read.

(11) Internal equivalent circuit

The equivalent circuit of the analog input block is shown below.

Figure 13-22. Internal Equivalent Circuit of ANIn Pin

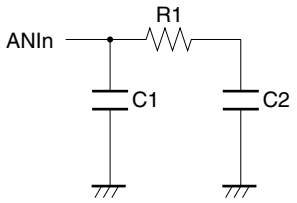

Table 13-5. Resistance and Capacitance Values of Equivalent Circuit (Reference Values)

AV_{REF}	R1	C1	C2
4.0 V ≤ AV_{REF} ≤ 5.5 V	8.1 kΩ	8 pF	5 pF
2.7 V ≤ AV_{REF} < 4.0 V	31 kΩ	8 pF	5 pF
2.3 V ≤ AV_{REF} < 2.7 V	381 kΩ	8 pF	5 pF

Remarks 1. The resistance and capacitance values shown in Table 13-5 are not guaranteed values.

2. 78K0/KB2: n = 0 to 3, 38-pin products of the 78K0/KC2: n = 0 to 5, other products: n = 0 to 7

CHAPTER 14 SERIAL INTERFACE UART0

14.1 Functions of Serial Interface UART0

Serial interface UART0 are mounted onto all 78K0/Kx2 microcontroller products.

Serial interface UART0 has the following two modes.

(1) Operation stop mode

This mode is used when serial communication is not executed and can enable a reduction in the power consumption.

For details, see **14.4.1 Operation stop mode**.

(2) Asynchronous serial interface (UART) mode

The functions of this mode are outlined below.

For details, see **14.4.2 Asynchronous serial interface (UART) mode** and **14.4.3 Dedicated baud rate generator**.

- Maximum transfer rate: 625 kbps
- Two-pin configuration TxD0: Transmit data output pin
  RxD0: Receive data input pin
- Length of communication data can be selected from 7 or 8 bits.
- Dedicated on-chip 5-bit baud rate generator allowing any baud rate to be set
- Transmission and reception can be performed independently (full-duplex operation).
- Fixed to LSB-first communication

Cautions 1. If clock supply to serial interface UART0 is not stopped (e.g., in the HALT mode), normal operation continues. If clock supply to serial interface UART0 is stopped (e.g., in the STOP mode), each register stops operating, and holds the value immediately before clock supply was stopped. The TxD0 pin also holds the value immediately before clock supply was stopped and outputs it. However, the operation is not guaranteed after clock supply is resumed. Therefore, reset the circuit so that POWER0 = 0, RXE0 = 0, and TXE0 = 0.

2. Set POWER0 = 1 and then set TXE0 = 1 (transmission) or RXE0 = 1 (reception) to start communication.

3. TXE0 and RXE0 are synchronized by the base clock (f_{XCLK0}) set by BRGC0. To enable transmission or reception again, set TXE0 or RXE0 to 1 at least two clocks of base clock after TXE0 or RXE0 has been cleared to 0. If TXE0 or RXE0 is set within two clocks of base clock, the transmission circuit or reception circuit may not be initialized.

4. Set transmit data to TXS0 at least one base clock (f_{XCLK0}) after setting TXE0 = 1.

14.2 Configuration of Serial Interface UART0

Serial interface UART0 includes the following hardware.

Table 14-1. Configuration of Serial Interface UART0

Item	Configuration
Registers	Receive buffer register 0 (RXB0) Receive shift register 0 (RXS0) Transmit shift register 0 (TXS0)
Control registers	Asynchronous serial interface operation mode register 0 (ASIM0) Asynchronous serial interface reception error status register 0 (ASIS0) Baud rate generator control register 0 (BRGC0) Port mode register 1 (PM1) Port register 1 (P1)

Figure 14-1. Block Diagram of Serial Interface UART0

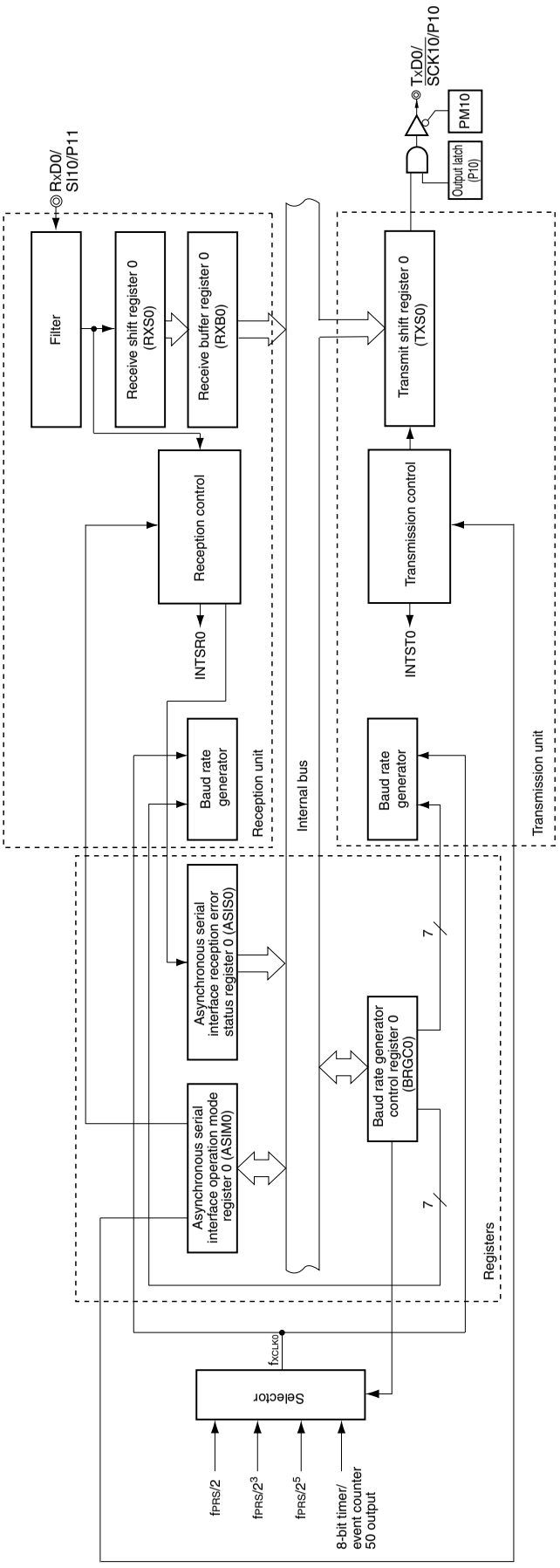

(1) Receive buffer register 0 (RXB0)

This 8-bit register stores parallel data converted by receive shift register 0 (RXS0).

Each time 1 byte of data has been received, new receive data is transferred to this register from receive shift register 0 (RXS0).

If the data length is set to 7 bits the receive data is transferred to bits 0 to 6 of RXB0 and the MSB of RXB0 is always 0.

If an overrun error (OVE0) occurs, the receive data is not transferred to RXB0.

RXB0 can be read by an 8-bit memory manipulation instruction. No data can be written to this register.

Reset signal generation and POWER0 = 0 set this register to FFH.

(2) Receive shift register 0 (RXS0)

This register converts the serial data input to the RxD0 pin into parallel data.

RXS0 cannot be directly manipulated by a program.

(3) Transmit shift register 0 (TXS0)

This register is used to set transmit data. Transmission is started when data is written to TXS0, and serial data is transmitted from the TxD0 pins.

TXS0 can be written by an 8-bit memory manipulation instruction. This register cannot be read.

Reset signal generation, POWER0 = 0, and TXE0 = 0 set this register to FFH.

Cautions 1. Set transmit data to TXS0 at least one base clock (f_{XCLK0}) after setting TXE0 = 1.

2. Do not write the next transmit data to TXS0 before the transmission completion interrupt signal (INTST0) is generated.

14.3 Registers Controlling Serial Interface UART0

Serial interface UART0 is controlled by the following five registers.

- Asynchronous serial interface operation mode register 0 (ASIM0)
- Asynchronous serial interface reception error status register 0 (ASIS0)
- Baud rate generator control register 0 (BRGC0)
- Port mode register 1 (PM1)
- Port register 1 (P1)

(1) Asynchronous serial interface operation mode register 0 (ASIM0)

This 8-bit register controls the serial communication operations of serial interface UART0.

This register can be set by a 1-bit or 8-bit memory manipulation instruction.

Reset signal generation sets this register to 01H.

Figure 14-2. Format of Asynchronous Serial Interface Operation Mode Register 0 (ASIM0) (1/2)

Address: FF70H After reset: 01H R/W

Symbol	<7>	<6>	<5>	4	3	2	1	0
ASIM0	POWER0	TXE0	RXE0	PS01	PS00	CL0	SL0	1

POWER0	Enables/disables operation of internal operation clock
0[Note 1]	Disables operation of the internal operation clock (fixes the clock to low level) and asynchronously resets the internal circuit[Note 2].
1	Enables operation of the internal operation clock.

TXE0	Enables/disables transmission
0	Disables transmission (synchronously resets the transmission circuit).
1	Enables transmission.

RXE0	Enables/disables reception
0	Disables reception (synchronously resets the reception circuit).
1	Enables reception.

Notes 1. The input from the RxD0 pin is fixed to high level when POWER0 = 0.

2. Asynchronous serial interface reception error status register 0 (ASIS0), transmit shift register 0 (TXS0), and receive buffer register 0 (RXB0) are reset.

Figure 14-2. Format of Asynchronous Serial Interface Operation Mode Register 0 (ASIM0) (2/2)

PS01	PS00	Transmission operation	Reception operation
0	0	Does not output parity bit.	Reception without parity
0	1	Outputs 0 parity.	Reception as 0 parity[Note]
1	0	Outputs odd parity.	Judges as odd parity.
1	1	Outputs even parity.	Judges as even parity.

CL0	Specifies character length of transmit/receive data
0	Character length of data = 7 bits
1	Character length of data = 8 bits

SL0	Specifies number of stop bits of transmit data
0	Number of stop bits = 1
1	Number of stop bits = 2

Note If “reception as 0 parity” is selected, the parity is not judged. Therefore, bit 2 (PE0) of asynchronous serial interface reception error status register 0 (ASIS0) is not set and the error interrupt does not occur.

Cautions 1. To start the transmission, set POWER0 to 1 and then set TXE0 to 1. To stop the transmission, clear TXE0 to 0, and then clear POWER0 to 0.

2. To start the reception, set POWER0 to 1 and then set RXE0 to 1. To stop the reception, clear RXE0 to 0, and then clear POWER0 to 0.

3. Set POWER0 to 1 and then set RXE0 to 1 while a high level is input to the RxD0 pin. If POWER0 is set to 1 and RXE0 is set to 1 while a low level is input, reception is started.

4. TXE0 and RXE0 are synchronized by the base clock (f_{XCLK0}) set by BRGC0. To enable transmission or reception again, set TXE0 or RXE0 to 1 at least two clocks of base clock after TXE0 or RXE0 has been cleared to 0. If TXE0 or RXE0 is set within two clocks of base clock, the transmission circuit or reception circuit may not be initialized.

5. Set transmit data to TXS0 at least one base clock (f_{XCLK0}) after setting TXE0 = 1.

6. Clear the TXE0 and RXE0 bits to 0 before rewriting the PS01, PS00, and CL0 bits.

7. Make sure that TXE0 = 0 when rewriting the SL0 bit. Reception is always performed with “number of stop bits = 1”, and therefore, is not affected by the set value of the SL0 bit.

8. Be sure to set bit 0 to 1.

(2) Asynchronous serial interface reception error status register 0 (ASIS0)

This register indicates an error status on completion of reception by serial interface UART0. It includes three error flag bits (PE0, FE0, OVE0).

This register is read-only by an 8-bit memory manipulation instruction.

Reset signal generation, or clearing bit 7 (POWER0) or bit 5 (RXE0) of ASIM0 to 0 clears this register to 00H. 00H is read when this register is read. If a reception error occurs, read ASIS0 and then read receive buffer register 0 (RXB0) to clear the error flag.

Figure 14-3. Format of Asynchronous Serial Interface Reception Error Status Register 0 (ASIS0)

Address: FF73H After reset: 00H R

Symbol	7	6	5	4	3	2	1	0
ASIS0	0	0	0	0	0	PE0	FE0	OVE0

PE0	Status flag indicating parity error
0	If POWER0 = 0 or RXE0 = 0, or if ASIS0 register is read.
1	If the parity of transmit data does not match the parity bit on completion of reception.

FE0	Status flag indicating framing error
0	If POWER0 = 0 or RXE0 = 0, or if ASIS0 register is read.
1	If the stop bit is not detected on completion of reception.

OVE0	Status flag indicating overrun error
0	If POWER0 = 0 and RXE0 = 0, or if ASIS0 register is read.
1	If receive data is set to the RXB0 register and the next reception operation is completed before the data is read.

Cautions 1. The operation of the PE0 bit differs depending on the set values of the PS01 and PS00 bits of asynchronous serial interface operation mode register 0 (ASIM0).

2. Only the first bit of the receive data is checked as the stop bit, regardless of the number of stop bits.

3. If an overrun error occurs, the next receive data is not written to receive buffer register 0 (RXB0) but discarded.

4. If data is read from ASIS0, a wait cycle is generated. Do not read data from ASIS0 when the peripheral hardware clock (f_{PRS}) is stopped. For details, see CHAPTER 36 CAUTIONS FOR WAIT.

(3) Baud rate generator control register 0 (BRGC0)

This register selects the base clock of serial interface UART0 and the division value of the 5-bit counter.

BRGC0 can be set by an 8-bit memory manipulation instruction.

Reset signal generation sets this register to 1FH.

Figure 14-4. Format of Baud Rate Generator Control Register 0 (BRGC0)

Address: FF71H After reset: 1FH R/W

Symbol	7	6	5	4	3	2	1	0
BRGC0	TPS01	TPS00	0	MDL04	MDL03	MDL02	MDL01	MDL00

TPS01	TPS00	Base clock (f_{XCLK0}) selection[Note 1]				
			f_{PRS} = 2 MHz	f_{PRS} = 5 MHz	f_{PRS} = 10 MHz	f_{PRS} = 20 MHz
0	0	TM50 output[Note 2]				
0	1	$f_{PRS}/2$	1 MHz	2.5 MHz	5 MHz	10 MHz
1	0	$f_{PRS}/2^3$	250 kHz	625 kHz	1.25 MHz	2.5 MHz
1	1	$f_{PRS}/2^5$	62.5 kHz	156.25 kHz	312.5 kHz	625 kHz

MDL04	MDL03	MDL02	MDL01	MDL00	k	Selection of 5-bit counter output clock
0	0	×	×	×	×	Setting prohibited
0	1	0	0	0	8	$f_{XCLK0}/8$
0	1	0	0	1	9	$f_{XCLK0}/9$
0	1	0	1	0	10	$f_{XCLK0}/10$
•	•	•	•	•	•	•
•	•	•	•	•	•	•
•	•	•	•	•	•	•
•	•	•	•	•	•	•
•	•	•	•	•	•	•
1	1	0	1	0	26	$f_{XCLK0}/26$
1	1	0	1	1	27	$f_{XCLK0}/27$
1	1	1	0	0	28	$f_{XCLK0}/28$
1	1	1	0	1	29	$f_{XCLK0}/29$
1	1	1	1	0	30	$f_{XCLK0}/30$
1	1	1	1	1	31	$f_{XCLK0}/31$

Note 1. The frequency that can be used for the peripheral hardware clock (f_{PRS}) differs depending on the power supply voltage and product specifications.

Supply Voltage	Conventional-specification Products (μPD78F05xx and 78F05xxD)	Expanded-specification Products (μPD78F05xxA and 78F05xxDA)
4.0 V ≤ V_{DD} ≤ 5.5 V	f_{PRS} ≤ 20 MHz	f_{PRS} ≤ 20 MHz
2.7 V ≤ V_{DD} < 4.0 V	f_{PRS} ≤ 10 MHz	
1.8 V ≤ V_{DD} < 2.7 V (Standard products and (A) grade products only)	f_{PRS} ≤ 5 MHz	f_{PRS} ≤ 5 MHz

(The values shown in the table above are those when $f_{PRS} = f_{XH}$ (XSEL = 1).)

Note 2. Note the following points when selecting the TM50 output as the base clock.

- Mode in which the count clock is cleared and started upon a match of TM50 and CR50 (TMC506 = 0)
  Start the operation of 8-bit timer/event counter 50 first and then enable the timer F/F inversion operation (TMC501 = 1).
- PWM mode (TMC506 = 1)
  Start the operation of 8-bit timer/event counter 50 first and then set the count clock to make the duty = 50%.

It is not necessary to enable (TOE50 = 1) TO50 output in any mode.

Cautions 1. Make sure that bit 6 (TXE0) and bit 5 (RXE0) of the ASIM0 register = 0 when rewriting the MDL04 to MDL00 bits.

2. Make sure that bit 7 (POWER0) of the ASIM0 register = 0 when rewriting the TPS01 and TPS00 bits.

3. The baud rate value is the output clock of the 5-bit counter divided by 2.

Remarks 1. f_{XCLK0}: Frequency of base clock selected by the TPS01 and TPS00 bits

2. f_{PRS}: Peripheral hardware clock frequency

3. k: Value set by the MDL04 to MDL00 bits (k = 8, 9, 10, ..., 31)

4. ×: Don't care

5. TMC506: Bit 6 of 8-bit timer mode control register 50 (TMC50)
TMC501: Bit 1 of TMC50

(4) Port mode register 1 (PM1)

This register sets port 1 input/output in 1-bit units.

When using the P10/TxD0/$\overline{SCK10}$ pin for serial interface data output, clear PM10 to 0 and set the output latch of P10 to 1.

When using the P11/RxD0/SI10 pin for serial interface data input, set PM11 to 1. The output latch of P11 at this time may be 0 or 1.

PM1 can be set by a 1-bit or 8-bit memory manipulation instruction.

Reset signal generation sets this register to FFH.

Figure 14-5. Format of Port Mode Register 1 (PM1)

Address: FF21H After reset: FFH R/W

Symbol	7	6	5	4	3	2	1	0
PM1	PM17	PM16	PM15	PM14	PM13	PM12	PM11	PM10

PM1n	P1n pin I/O mode selection (n = 0 to 7)
0	Output mode (output buffer on)
1	Input mode (output buffer off)

14.4 Operation of Serial Interface UART0

Serial interface UART0 has the following two modes.

- Operation stop mode
- Asynchronous serial interface (UART) mode

14.4.1 Operation stop mode

In this mode, serial communication cannot be executed, thus reducing the power consumption. In addition, the pins can be used as ordinary port pins in this mode. To set the operation stop mode, clear bits 7, 6, and 5 (POWER0, TXE0, and RXE0) of ASIM0 to 0.

(1) Register used

The operation stop mode is set by asynchronous serial interface operation mode register 0 (ASIM0).

ASIM0 can be set by a 1-bit or 8-bit memory manipulation instruction.

Reset signal generation sets this register to 01H.

Address: FF70H After reset: 01H R/W

Symbol	<7>	<6>	<5>	4	3	2	1	0
ASIM0	POWER0	TXE0	RXE0	PS01	PS00	CL0	SL0	1

POWER0	Enables/disables operation of internal operation clock
0[Note 1]	Disables operation of the internal operation clock (fixes the clock to low level) and asynchronously resets the internal circuit[Note 2].

TXE0	Enables/disables transmission
0	Disables transmission (synchronously resets the transmission circuit).

RXE0	Enables/disables reception
0	Disables reception (synchronously resets the reception circuit).

Notes 1. The input from the RxD0 pin is fixed to high level when POWER0 = 0.

2. Asynchronous serial interface reception error status register 0 (ASIS0), transmit shift register 0 (TXS0), and receive buffer register 0 (RXB0) are reset.

Caution Clear POWER0 to 0 after clearing TXE0 and RXE0 to 0 to set the operation stop mode. To start the communication, set POWER0 to 1, and then set TXE0 or RXE0 to 1.

Remark To use the RxD0/SI10/P11 and TxD0/$\overline{\text{SCK10}}$/P10 pins as general-purpose port pins, see **CHAPTER 5 PORT FUNCTIONS**.

14.4.2 Asynchronous serial interface (UART) mode

In this mode, 1-byte data is transmitted/received following a start bit, and a full-duplex operation can be performed.

A dedicated UART baud rate generator is incorporated, so that communication can be executed at a wide range of baud rates.

(1) Registers used

- Asynchronous serial interface operation mode register 0 (ASIM0)
- Asynchronous serial interface reception error status register 0 (ASIS0)
- Baud rate generator control register 0 (BRGC0)
- Port mode register 1 (PM1)
- Port register 1 (P1)

The basic procedure of setting an operation in the UART mode is as follows.

<1> Set the BRGC0 register (see **Figure 14-4**).
<2> Set bits 1 to 4 (SL0, CL0, PS00, and PS01) of the ASIM0 register (see **Figure 14-2**).
<3> Set bit 7 (POWER0) of the ASIM0 register to 1.
<4> Set bit 6 (TXE0) of the ASIM0 register to 1. → Transmission is enabled.
Set bit 5 (RXE0) of the ASIM0 register to 1. → Reception is enabled.
<5> Write data to the TXS0 register. → Data transmission is started.

Caution Take relationship with the other party of communication when setting the port mode register and port register.

The relationship between the register settings and pins is shown below.

Table 14-2. Relationship Between Register Settings and Pins

POWER0	TXE0	RXE0	PM10	P10	PM11	P11	UART0 Operation	Pin Function	
								TxD0/$\overline{\text{SCK10}}$/P10	RxD0/SI10/P11
0	0	0	×Note	×Note	×Note	×Note	Stop	$\overline{\text{SCK10}}$/P10	SI10/P11
1	0	1	×Note	×Note	1	×	Reception	$\overline{\text{SCK10}}$/P10	RxD0
	1	0	0	1	×Note	×Note	Transmission	TxD0	SI10/P11
	1	1	0	1	1	×	Transmission/ reception	TxD0	RxD0

Note Can be set as port function or serial interface CSI10.

Remark ×: don't care
POWER0: Bit 7 of asynchronous serial interface operation mode register 0 (ASIM0)
TXE0: Bit 6 of ASIM0
RXE0: Bit 5 of ASIM0
PM1×: Port mode register
P1×: Port output latch

(2) Communication operation

(a) Format and waveform example of normal transmit/receive data

Figures 14-6 and 14-7 show the format and waveform example of the normal transmit/receive data.

Figure 14-6. Format of Normal UART Transmit/Receive Data

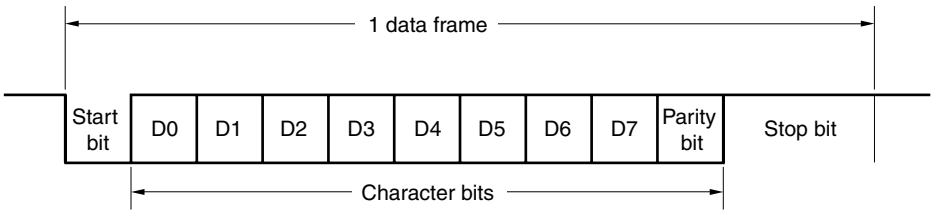

One data frame consists of the following bits.

- Start bit ... 1 bit
- Character bits ... 7 or 8 bits (LSB first)
- Parity bit ... Even parity, odd parity, 0 parity, or no parity
- Stop bit ... 1 or 2 bits

The character bit length, parity, and stop bit length in one data frame are specified by asynchronous serial interface operation mode register 0 (ASIM0).

Figure 14-7. Example of Normal UART Transmit/Receive Data Waveform

1. Data length: 8 bits, Parity: Even parity, Stop bit: 1 bit, Communication data: 55H

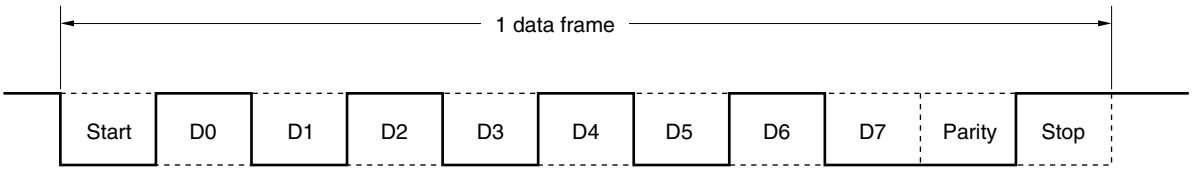

2. Data length: 7 bits, Parity: Odd parity, Stop bit: 2 bits, Communication data: 36H

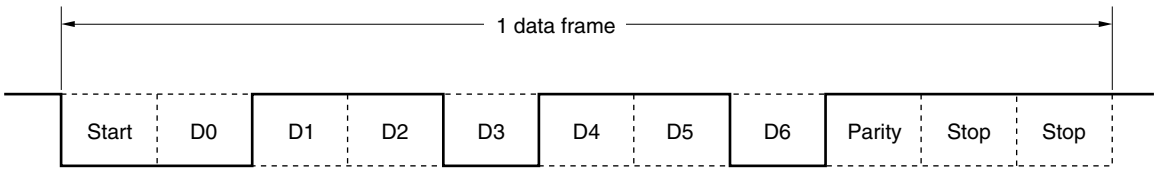

3. Data length: 8 bits, Parity: None, Stop bit: 1 bit, Communication data: 87H

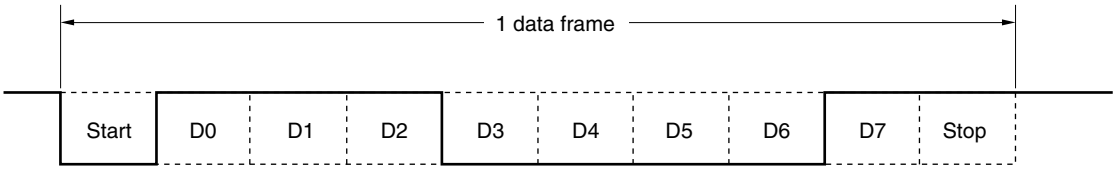

(b) Parity types and operation

The parity bit is used to detect a bit error in communication data. Usually, the same type of parity bit is used on both the transmission and reception sides. With even parity and odd parity, a 1-bit (odd number) error can be detected. With zero parity and no parity, an error cannot be detected.

(i) Even parity

- Transmission

  Transmit data, including the parity bit, is controlled so that the number of bits that are "1" is even.
  The value of the parity bit is as follows.

  If transmit data has an odd number of bits that are "1": 1
  If transmit data has an even number of bits that are "1": 0

- Reception

  The number of bits that are "1" in the receive data, including the parity bit, is counted. If it is odd, a parity error occurs.

(ii) Odd parity

- Transmission

  Unlike even parity, transmit data, including the parity bit, is controlled so that the number of bits that are "1" is odd.

  If transmit data has an odd number of bits that are "1": 0
  If transmit data has an even number of bits that are "1": 1

- Reception

  The number of bits that are "1" in the receive data, including the parity bit, is counted. If it is even, a parity error occurs.

(iii) 0 parity

The parity bit is cleared to 0 when data is transmitted, regardless of the transmit data.
The parity bit is not detected when the data is received. Therefore, a parity error does not occur regardless of whether the parity bit is "0" or "1".

(iv) No parity

No parity bit is appended to the transmit data.
Reception is performed assuming that there is no parity bit when data is received. Because there is no parity bit, a parity error does not occur.

(c) Transmission

If bit 7 (POWER0) of asynchronous serial interface operation mode register 0 (ASIM0) is set to 1 and bit 6 (TXE0) of ASIM0 is then set to 1, transmission is enabled. Transmission can be started by writing transmit data to transmit shift register 0 (TXS0). The start bit, parity bit, and stop bit are automatically appended to the data.

When transmission is started, the start bit is output from the TxD0 pin, and the transmit data is output followed by the rest of the data in order starting from the LSB. When transmission is completed, the parity and stop bits set by ASIM0 are appended and a transmission completion interrupt request (INTST0) is generated.

Transmission is stopped until the data to be transmitted next is written to TXS0.

Figure 14-8 shows the timing of the transmission completion interrupt request (INTST0). This interrupt occurs as soon as the last stop bit has been output.

Caution After transmit data is written to TXS0, do not write the next transmit data before the transmission completion interrupt signal (INTST0) is generated.

Figure 14-8. Transmission Completion Interrupt Request Timing

1. Stop bit length: 1

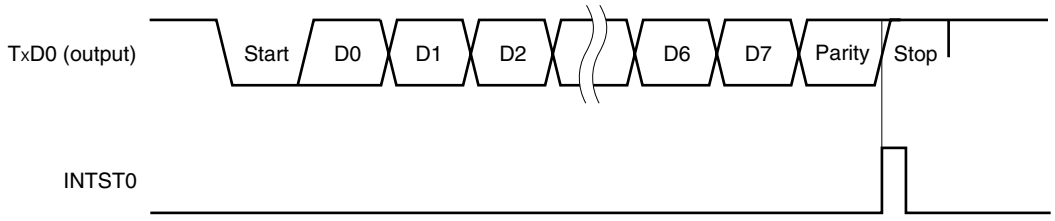

2. Stop bit length: 2

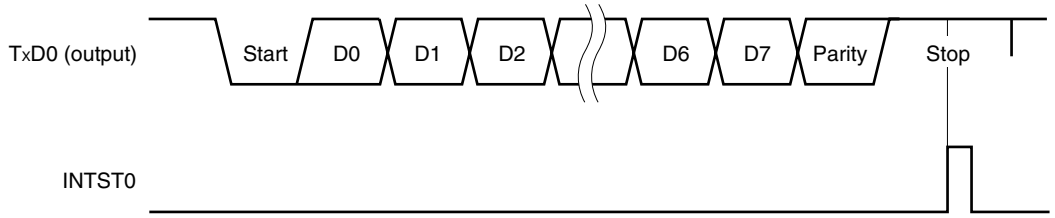

(d) Reception

Reception is enabled and the RxD0 pin input is sampled when bit 7 (POWER0) of asynchronous serial interface operation mode register 0 (ASIM0) is set to 1 and then bit 5 (RXE0) of ASIM0 is set to 1.

The 5-bit counter of the baud rate generator starts counting when the falling edge of the RxD0 pin input is detected. When the set value of baud rate generator control register 0 (BRGC0) has been counted, the RxD0 pin input is sampled again (in Figure 14-9). If the RxD0 pin is low level at this time, it is recognized as a start bit.

When the start bit is detected, reception is started, and serial data is sequentially stored in receive shift register 0 (RXS0) at the set baud rate. When the stop bit has been received, the reception completion interrupt (INTSR0) is generated and the data of RXS0 is written to receive buffer register 0 (RXB0). If an overrun error (OVE0) occurs, however, the receive data is not written to RXB0.

Even if a parity error (PE0) occurs while reception is in progress, reception continues to the reception position of the stop bit, and an reception error interrupt (INTSR0) is generated after completion of reception.

INTSR0 occurs upon completion of reception and in case of a reception error.

Figure 14-9. Reception Completion Interrupt Request Timing

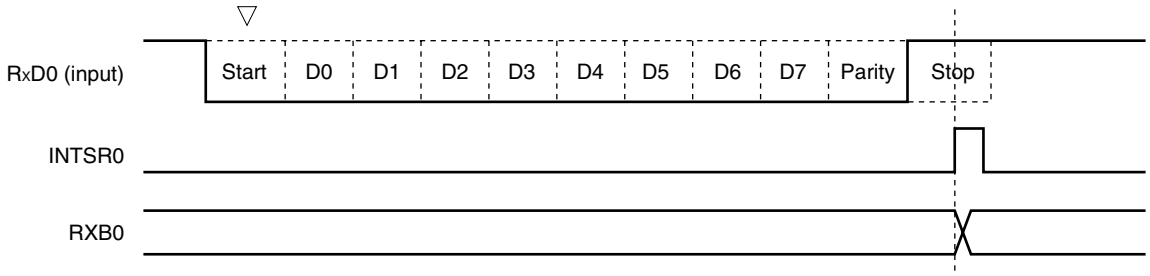

Cautions 1. If a reception error occurs, read asynchronous serial interface reception error status register 0 (ASIS0) and then read receive buffer register 0 (RXB0) to clear the error flag. Otherwise, an overrun error will occur when the next data is received, and the reception error status will persist.

2. Reception is always performed with the "number of stop bits = 1". The second stop bit is ignored.

(e) Reception error

Three types of errors may occur during reception: a parity error, framing error, or overrun error. If the error flag of asynchronous serial interface reception error status register 0 (ASIS0) is set as a result of data reception, a reception error interrupt (INTSR0) is generated.

Which error has occurred during reception can be identified by reading the contents of ASIS0 in the reception error interrupt (INTSR0) servicing (see **Figure 14-3**).

The contents of ASIS0 are cleared to 0 when ASIS0 is read.

Table 14-3. Cause of Reception Error

Reception Error	Cause
Parity error	The parity specified for transmission does not match the parity of the receive data.
Framing error	Stop bit is not detected.
Overrun error	Reception of the next data is completed before data is read from receive buffer register 0 (RXB0).

(f) Noise filter of receive data

The RxD0 signal is sampled using the base clock output by the prescaler block.

If two sampled values are the same, the output of the match detector changes, and the data is sampled as input data.

Because the circuit is configured as shown in Figure 14-10, the internal processing of the reception operation is delayed by two clocks from the external signal status.

Figure 14-10. Noise Filter Circuit

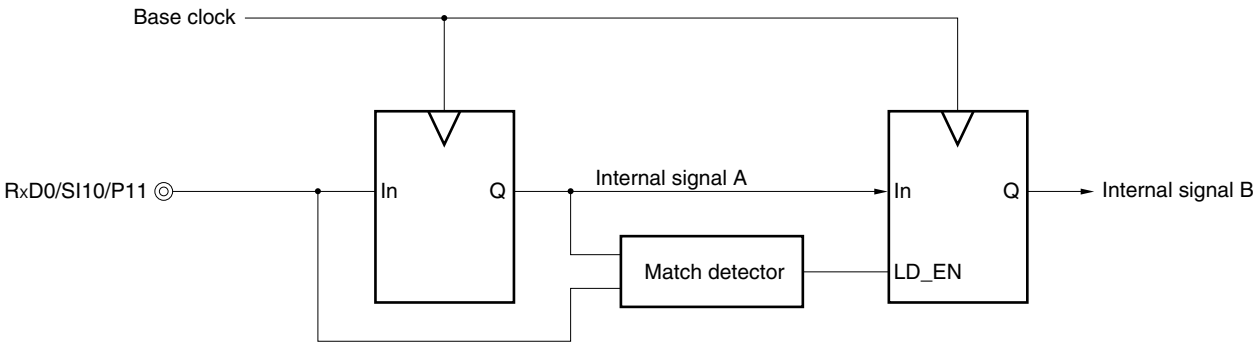

14.4.3 Dedicated baud rate generator

The dedicated baud rate generator consists of a source clock selector and a 5-bit programmable counter, and generates a serial clock for transmission/reception of UART0.

Separate 5-bit counters are provided for transmission and reception.

(1) Configuration of baud rate generator

- Base clock
  The clock selected by bits 7 and 6 (TPS01 and TPS00) of baud rate generator control register 0 (BRGC0) is supplied to each module when bit 7 (POWER0) of asynchronous serial interface operation mode register 0 (ASIM0) is 1. This clock is called the base clock and its frequency is called f_{XCLK0}. The base clock is fixed to low level when POWER0 = 0.

- Transmission counter
  This counter stops operation, cleared to 0, when bit 7 (POWER0) or bit 6 (TXE0) of asynchronous serial interface operation mode register 0 (ASIM0) is 0.
  It starts counting when POWER0 = 1 and TXE0 = 1.
  The counter is cleared to 0 when the first data transmitted is written to transmit shift register 0 (TXS0).

- Reception counter
  This counter stops operation, cleared to 0, when bit 7 (POWER0) or bit 5 (RXE0) of asynchronous serial interface operation mode register 0 (ASIM0) is 0.
  It starts counting when the start bit has been detected.
  The counter stops operation after one frame has been received, until the next start bit is detected.

Figure 14-11. Configuration of Baud Rate Generator

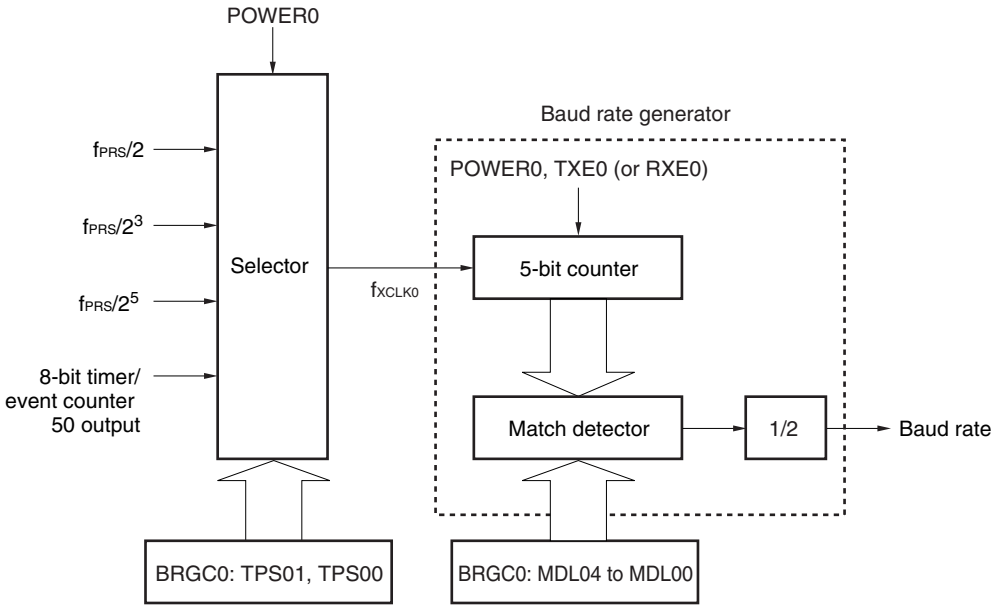

Remark POWER0: Bit 7 of asynchronous serial interface operation mode register 0 (ASIM0)
TXE0: Bit 6 of ASIM0
RXE0: Bit 5 of ASIM0
BRGC0: Baud rate generator control register 0

(2) Generation of serial clock

A serial clock to be generated can be specified by using baud rate generator control register 0 (BRGC0).

Select the clock to be input to the 5-bit counter by using bits 7 and 6 (TPS01 and TPS00) of BRGC0.

Bits 4 to 0 (MDL04 to MDL00) of BRGC0 can be used to select the division value ($f_{XCLK0}/8$ to $f_{XCLK0}/31$) of the 5-bit counter.

14.4.4 Calculation of baud rate

(1) Baud rate calculation expression

The baud rate can be calculated by the following expression.

- Baud rate = $\frac{f_{XCLK0}}{2 \times k}$ [bps]

f_{XCLK0}: Frequency of base clock selected by the TPS01 and TPS00 bits of the BRGC0 register

k: Value set by the MDL04 to MDL00 bits of the BRGC0 register (k = 8, 9, 10, ..., 31)

Table 14-4. Set Value of TPS01 and TPS00

TPS01	TPS00	Base clock (f_{XCLK0}) selection[Note 1]				
			f_{PRS} = 2 MHz	f_{PRS} = 5 MHz	f_{PRS} = 10 MHz	f_{PRS} = 20 MHz
0	0	TM50 output[Note 2]				
0	1	$f_{PRS}/2$	1 MHz	2.5 MHz	5 MHz	10 MHz
1	0	$f_{PRS}/2^3$	250 kHz	625 kHz	1.25 MHz	2.5 MHz
1	1	$f_{PRS}/2^5$	62.5 kHz	156.25 kHz	312.5 kHz	625 kHz

Notes 1. The frequency that can be used for the peripheral hardware clock (f_{PRS}) differs depending on the power supply voltage and product specifications.

Supply Voltage	Conventional-specification Products (μPD78F05xx and 78F05xxD)	Expanded-specification Products (μPD78F05xxA and 78F05xxDA)
4.0 V ≤ V_{DD} ≤ 5.5 V	f_{PRS} ≤ 20 MHz	f_{PRS} ≤ 20 MHz
2.7 V ≤ V_{DD} < 4.0 V	f_{PRS} ≤ 10 MHz	
1.8 V ≤ V_{DD} < 2.7 V (Standard products and (A) grade products only)	f_{PRS} ≤ 5 MHz	f_{PRS} ≤ 5 MHz

(The values shown in the table above are those when $f_{PRS} = f_{XH}$ (XSEL = 1).)

2. Note the following points when selecting the TM50 output as the base clock.

- Mode in which the count clock is cleared and started upon a match of TM50 and CR50 (TMC506 = 0)
  Start the operation of 8-bit timer/event counter 50 first and then enable the timer F/F inversion operation (TMC501 = 1).
- PWM mode (TMC506 = 1)
  Start the operation of 8-bit timer/event counter 50 first and then set the count clock to make the duty = 50%.

It is not necessary to enable (TOE50 = 1) TO50 output in any mode.

(2) Error of baud rate

The baud rate error can be calculated by the following expression.

- $\text{Error (\%)} = \left(\frac{\text{Actual baud rate (baud rate with error)}}{\text{Desired baud rate (correct baud rate)}} - 1 \right) \times 100 \text{ [\%]}$

Cautions 1. Keep the baud rate error during transmission to within the permissible error range at the reception destination.

2. Make sure that the baud rate error during reception satisfies the range shown in (4) Permissible baud rate range during reception.

Example: Frequency of base clock = 2.5 MHz = 2,500,000 Hz
Set value of MDL04 to MDL00 bits of BRGC0 register = 10000B (k = 16)
Target baud rate = 76,800 bps

Baud rate = 2.5 M/(2 × 16)
= 2,500,000/(2 × 16) = 78,125 [bps]

Error = (78,125/76,800 − 1) × 100
= 1.725 [%]

(3) Example of setting baud rate

Table 14-5. Set Data of Baud Rate Generator

Baud Rate [bps]	f_{PRS} = 2.0 MHz				f_{PRS} = 5.0 MHz				f_{PRS} = 10.0 MHz				f_{PRS} = 20.0 MHz			
	TPS01, TPS00	k	Calculated Value	ERR [%]	TPS01, TPS00	k	Calculated Value	ERR [%]	TPS01, TPS00	k	Calculated Value	ERR [%]	TPS01, TPS00	k	Calculated Value	ERR [%]
4800	2H	26	4808	0.16	3H	16	4883	1.73	–	–	–	–	–	–	–	–
9600	2H	13	9615	0.16	3H	8	9766	1.73	3H	16	9766	1.73	–	–	–	–
10400	2H	12	10417	0.16	2H	30	10417	0.16	3H	15	10417	0.16	3H	30	10417	0.16
19200	1H	26	19231	0.16	2H	16	19531	1.73	3H	8	19531	1.73	3H	16	19531	1.73
24000	1H	21	23810	−0.79	2H	13	24038	0.16	2H	26	24038	0.16	3H	13	24038	0.16
31250	1H	16	31250	0	2H	10	31250	0	2H	20	31250	0	3H	10	31250	0
33600	1H	15	33333	−0.79	2H	9	34722	3.34	2H	19	32895	−2.1	3H	9	34722	3.34
38400	1H	13	38462	0.16	2H	8	39063	1.73	2H	16	39063	1.73	3H	8	39063	1.73
56000	1H	9	55556	−0.79	1H	22	56818	1.46	2H	11	56818	1.46	2H	22	56818	1.46
62500	1H	8	62500	0	1H	20	62500	0	2H	10	62500	0	2H	20	62500	0
76800	–	–	–	–	1H	16	78125	1.73	2H	8	78125	1.73	2H	16	78125	1.73
115200	–	–	–	–	1H	11	113636	−1.36	1H	22	113636	−1.36	2H	11	113636	−1.36
153600	–	–	–	–	1H	8	156250	1.73	1H	16	156250	1.73	2H	8	156250	1.73
312500	–	–	–	–	–	–	–	–	1H	8	312500	0	1H	16	312500	0
625000	–	–	–	–	–	–	–	–	–	–	–	–	1H	8	625000	0

Remark TPS01, TPS00: Bits 7 and 6 of baud rate generator control register 0 (BRGC0) (setting of base clock (f_{XCLK0}))
k: Value set by the MDL04 to MDL00 bits of BRGC0 (k = 8, 9, 10, ..., 31)
f_{PRS}: Peripheral hardware clock frequency
ERR: Baud rate error

(4) Permissible baud rate range during reception

The permissible error from the baud rate at the transmission destination during reception is shown below.

Caution Make sure that the baud rate error during reception is within the permissible error range, by using the calculation expression shown below.

Figure 14-12. Permissible Baud Rate Range During Reception

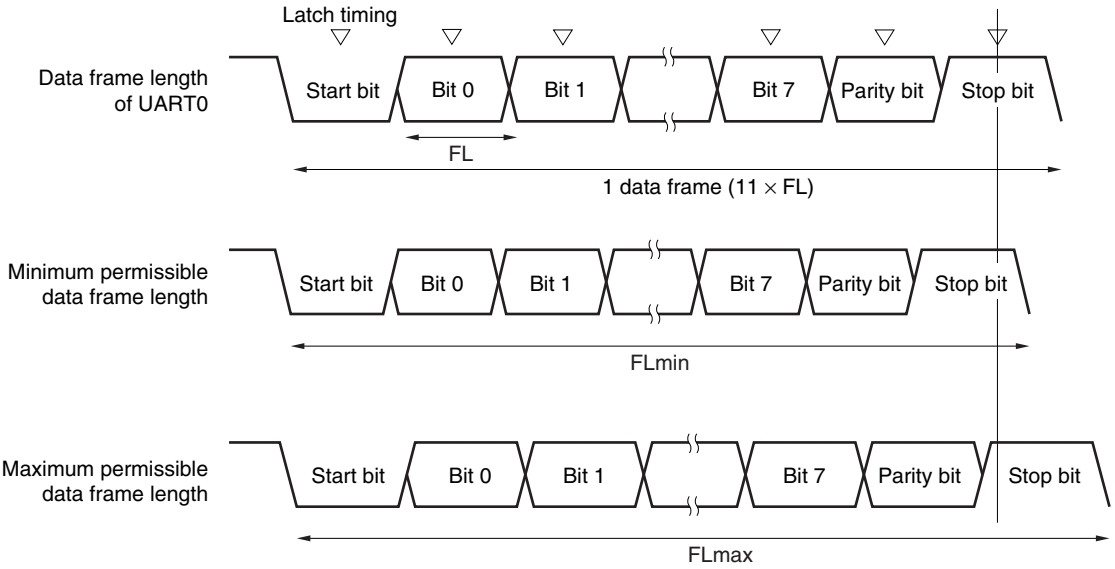

As shown in Figure 14-12, the latch timing of the receive data is determined by the counter set by baud rate generator control register 0 (BRGC0) after the start bit has been detected. If the last data (stop bit) meets this latch timing, the data can be correctly received.

Assuming that 11-bit data is received, the theoretical values can be calculated as follows.

$FL = (Brate)^{-1}$

Brate: Baud rate of UART0
k: Set value of BRGC0
FL: 1-bit data length
Margin of latch timing: 2 clocks

Minimum permissible data frame length: $FLmin = 11 \times FL - \frac{k-2}{2k} \times FL = \frac{21k+2}{2k} FL$

Therefore, the maximum receivable baud rate at the transmission destination is as follows.

$$BRmax = (FLmin/11)^{-1} = \frac{22k}{21k+2} Brate$$

Similarly, the maximum permissible data frame length can be calculated as follows.

$$\frac{10}{11} \times FLmax = 11 \times FL - \frac{k+2}{2 \times k} \times FL = \frac{21k-2}{2 \times k} FL$$

$$FLmax = \frac{21k-2}{20k} FL \times 11$$

Therefore, the minimum receivable baud rate at the transmission destination is as follows.

$$BRmin = (FLmax/11)^{-1} = \frac{20k}{21k-2} Brate$$

The permissible baud rate error between UART0 and the transmission destination can be calculated from the above minimum and maximum baud rate expressions, as follows.

Table 14-6. Maximum/Minimum Permissible Baud Rate Error

Division Ratio (k)	Maximum Permissible Baud Rate Error	Minimum Permissible Baud Rate Error
8	+3.53%	−3.61%
16	+4.14%	−4.19%
24	+4.34%	−4.38%
31	+4.44%	−4.47%

Remarks 1. The permissible error of reception depends on the number of bits in one frame, input clock frequency, and division ratio (k). The higher the input clock frequency and the higher the division ratio (k), the higher the permissible error.

2. k: Set value of BRGC0

CHAPTER 15 SERIAL INTERFACE UART6

15.1 Functions of Serial Interface UART6

Serial interface UART6 are mounted onto all 78K0/Kx2 microcontroller products.
Serial interface UART6 has the following two modes.

(1) Operation stop mode

This mode is used when serial communication is not executed and can enable a reduction in the power consumption.
For details, see **15.4.1 Operation stop mode**.

(2) Asynchronous serial interface (UART) mode

This mode supports the LIN (Local Interconnect Network)-bus. The functions of this mode are outlined below.
For details, see **15.4.2 Asynchronous serial interface (UART) mode** and **15.4.3 Dedicated baud rate generator**.

- Maximum transfer rate: 625 kbps
- Two-pin configuration TxD6: Transmit data output pin
  RxD6: Receive data input pin
- Data length of communication data can be selected from 7 or 8 bits.
- Dedicated internal 8-bit baud rate generator allowing any baud rate to be set
- Transmission and reception can be performed independently (full duplex operation).
- MSB- or LSB-first communication selectable
- Inverted transmission operation
- Sync break field transmission from 13 to 20 bits
- More than 11 bits can be identified for sync break field reception (SBF reception flag provided).

Cautions 1. The TxD6 output inversion function inverts only the transmission side and not the reception side. To use this function, the reception side must be ready for reception of inverted data.

2. If clock supply to serial interface UART6 is not stopped (e.g., in the HALT mode), normal operation continues. If clock supply to serial interface UART6 is stopped (e.g., in the STOP mode), each register stops operating, and holds the value immediately before clock supply was stopped. The TxD6 pin also holds the value immediately before clock supply was stopped and outputs it. However, the operation is not guaranteed after clock supply is resumed. Therefore, reset the circuit so that POWER6 = 0, RXE6 = 0, and TXE6 = 0.

3. Set POWER6 = 1 and then set TXE6 = 1 (transmission) or RXE6 = 1 (reception) to start communication.

4. TXE6 and RXE6 are synchronized by the base clock (f_{XCLK6}) set by CKSR6. To enable transmission or reception again, set TXE6 or RXE6 to 1 at least two clocks of the base clock after TXE6 or RXE6 has been cleared to 0. If TXE6 or RXE6 is set within two clocks of the base clock, the transmission circuit or reception circuit may not be initialized.

5. Set transmit data to TXB6 at least one base clock (f_{XCLK6}) after setting TXE6 = 1.

6. If data is continuously transmitted, the communication timing from the stop bit to the next start bit is extended two operating clocks of the macro. However, this does not affect the result of communication because the reception side initializes the timing when it has detected a start bit. Do not use the continuous transmission function if the interface is used in LIN communication operation.

Remark LIN stands for Local Interconnect Network and is a low-speed (1 to 20 kbps) serial communication protocol intended to aid the cost reduction of an automotive network.

LIN communication is single-master communication, and up to 15 slaves can be connected to one master.

The LIN slaves are used to control the switches, actuators, and sensors, and these are connected to the LIN master via the LIN network.

Normally, the LIN master is connected to a network such as CAN (Controller Area Network).

In addition, the LIN bus uses a single-wire method and is connected to the nodes via a transceiver that complies with ISO9141.

In the LIN protocol, the master transmits a frame with baud rate information and the slave receives it and corrects the baud rate error. Therefore, communication is possible when the baud rate error in the slave is ±15% or less.

Figures 15-1 and 15-2 outline the transmission and reception operations of LIN.

Figure 15-1. LIN Transmission Operation

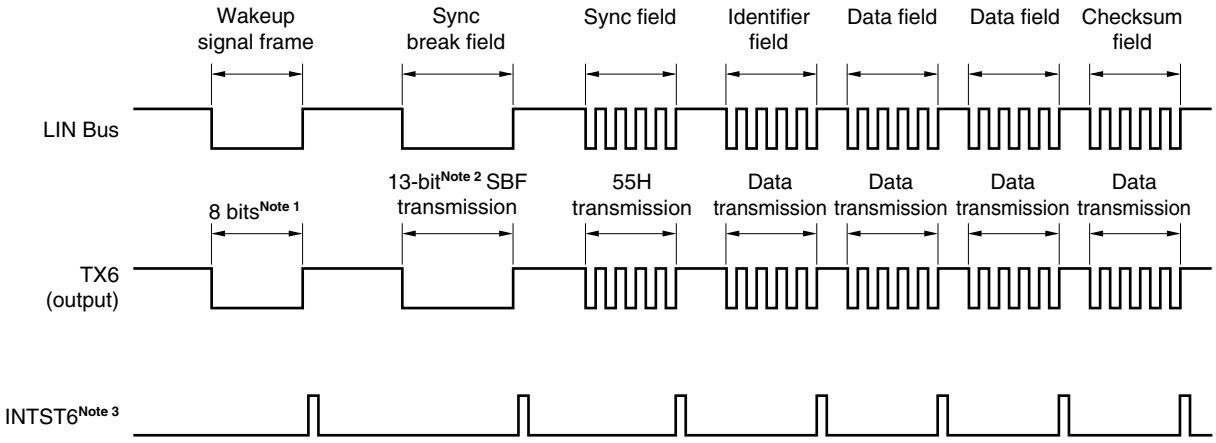

Notes 1. The wakeup signal frame is substituted by 80H transmission in the 8-bit mode.

2. The sync break field is output by hardware. The output width is the bit length set by bits 4 to 2 (SBL62 to SBL60) of asynchronous serial interface control register 6 (ASICL6) (see **15.4.2 (2) (h) SBF transmission**).

3. INTST6 is output on completion of each transmission. It is also output when SBF is transmitted.

Remark The interval between each field is controlled by software.

Figure 15-2. LIN Reception Operation

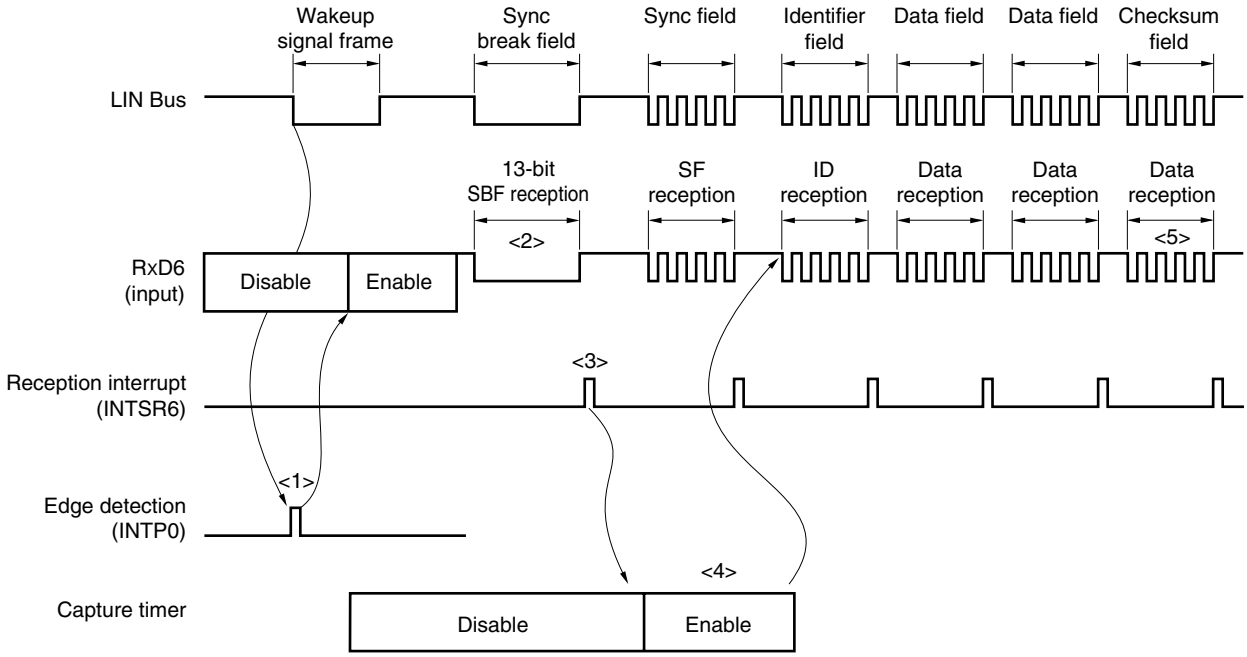

Reception processing is as follows.

<1> The wakeup signal is detected at the edge of the pin, and enables UART6 and sets the SBF reception mode.

<2> Reception continues until the STOP bit is detected. When an SBF with low-level data of 11 bits or more has been detected, it is assumed that SBF reception has been completed correctly, and an interrupt signal is output. If an SBF with low-level data of less than 11 bits has been detected, it is assumed that an SBF reception error has occurred. The interrupt signal is not output and the SBF reception mode is restored.

<3> If SBF reception has been completed correctly, an interrupt signal is output. Start 16-bit timer/event counter 00 by the SBF reception end interrupt servicing and measure the bit interval (pulse width) of the sync field (see **7.4.8 Pulse width measurement operation**). Detection of errors OVE6, PE6, and FE6 is suppressed, and error detection processing of UART communication and data transfer of the shift register and RXB6 is not performed. The shift register holds the reset value FFH.

<4> Calculate the baud rate error from the bit interval of the sync field, disable UART6 after SF reception, and then re-set baud rate generator control register 6 (BRGC6).

<5> Distinguish the checksum field by software. Also perform processing by software to initialize UART6 after reception of the checksum field and to set the SBF reception mode again.

Figure 15-3 shows the port configuration for LIN reception operation.

The wakeup signal transmitted from the LIN master is received by detecting the edge of the external interrupt (INTP0). The length of the sync field transmitted from the LIN master can be measured using the external event capture operation of 16-bit timer/event counter 00, and the baud rate error can be calculated.

The input source of the reception port input (RxD6) can be input to the external interrupt (INTP0) and 16-bit timer/event counter 00 by port input switch control (ISC0/ISC1), without connecting RxD6 and INTP0/TI000 externally.

Figure 15-3. Port Configuration for LIN Reception Operation

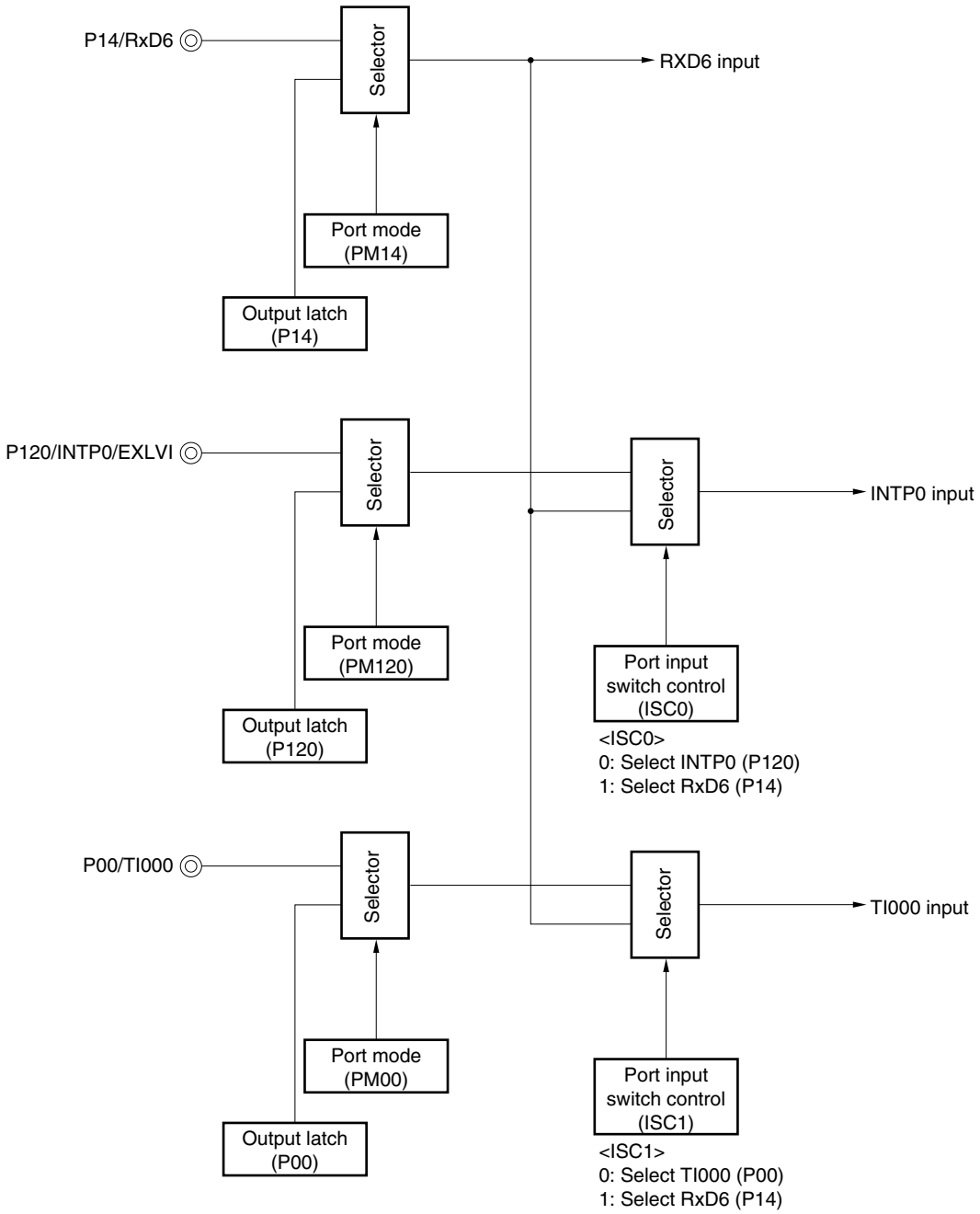

Remark ISC0, ISC1: Bits 0 and 1 of the input switch control register (ISC) (see **Figure 15-11**)

The peripheral functions used in the LIN communication operation are shown below.

<Peripheral functions used>

- External interrupt (INTP0); wakeup signal detection
  Use: Detects the wakeup signal edges and detects start of communication.
- 16-bit timer/event counter 00 (TI000); baud rate error detection
  Use: Detects the baud rate error (measures the TI000 input edge interval in the capture mode) by detecting the sync field (SF) length and divides it by the number of bits.
- Serial interface UART6

15.2 Configuration of Serial Interface UART6

Serial interface UART6 includes the following hardware.

Table 15-1. Configuration of Serial Interface UART6

Item	Configuration
Registers	Receive buffer register 6 (RXB6) Receive shift register 6 (RXS6) Transmit buffer register 6 (TXB6) Transmit shift register 6 (TXS6)
Control registers	Asynchronous serial interface operation mode register 6 (ASIM6) Asynchronous serial interface reception error status register 6 (ASIS6) Asynchronous serial interface transmission status register 6 (ASIF6) Clock selection register 6 (CKSR6) Baud rate generator control register 6 (BRGC6) Asynchronous serial interface control register 6 (ASICL6) Input switch control register (ISC) Port mode register 1 (PM1) Port register 1 (P1)

Figure 15-4. Block Diagram of Serial Interface UART6

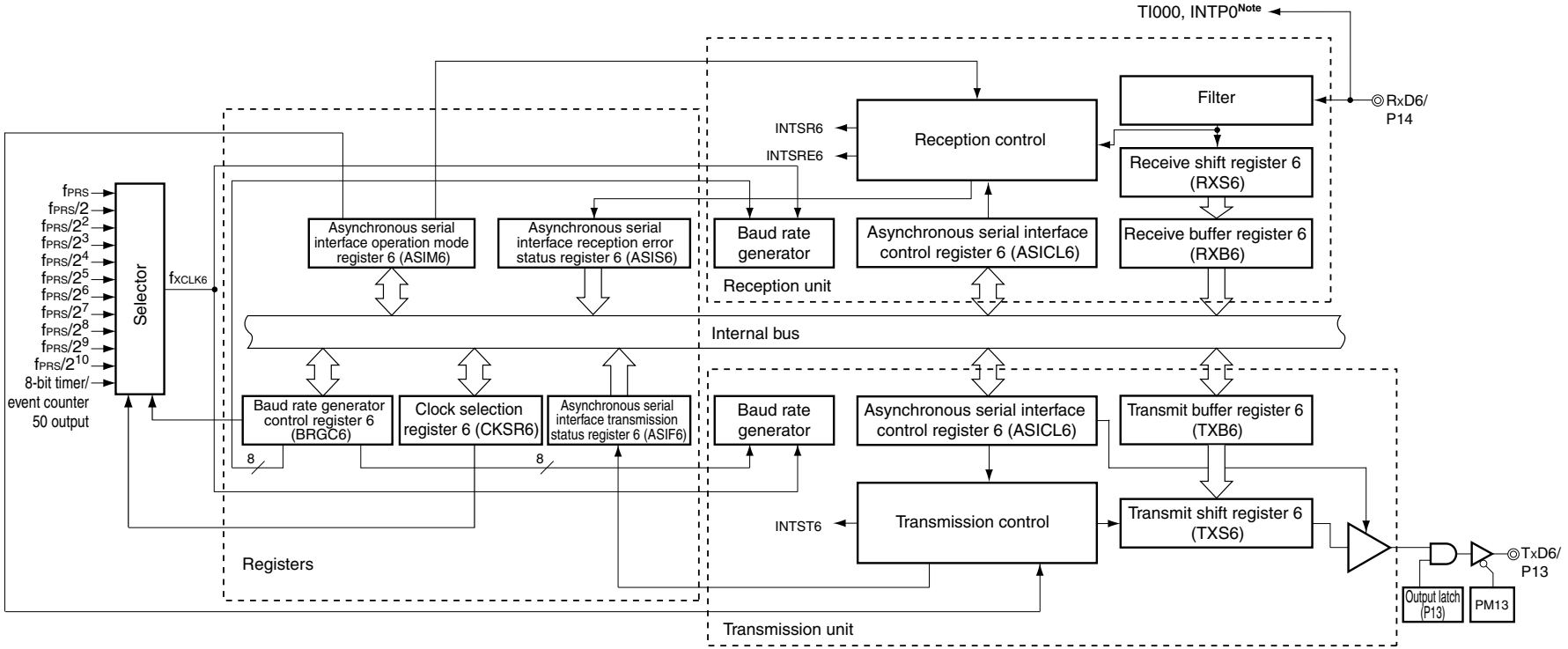

Note Selectable with input switch control register (ISC).

(1) Receive buffer register 6 (RXB6)

This 8-bit register stores parallel data converted by receive shift register 6 (RXS6).

Each time 1 byte of data has been received, new receive data is transferred to this register from RXS6. If the data length is set to 7 bits, data is transferred as follows.

- In LSB-first reception, the receive data is transferred to bits 0 to 6 of RXB6 and the MSB of RXB6 is always 0.
- In MSB-first reception, the receive data is transferred to bits 1 to 7 of RXB6 and the LSB of RXB6 is always 0.

If an overrun error (OVE6) occurs, the receive data is not transferred to RXB6.

RXB6 can be read by an 8-bit memory manipulation instruction. No data can be written to this register.

Reset signal generation sets this register to FFH.

(2) Receive shift register 6 (RXS6)

This register converts the serial data input to the RxD6 pin into parallel data.

RXS6 cannot be directly manipulated by a program.

(3) Transmit buffer register 6 (TXB6)

This buffer register is used to set transmit data. Transmission is started when data is written to TXB6.

This register can be read or written by an 8-bit memory manipulation instruction.

Reset signal generation sets this register to FFH.

Cautions 1. Do not write data to TXB6 when bit 1 (TXBF6) of asynchronous serial interface transmission status register 6 (ASIF6) is 1.

2. Do not refresh (write the same value to) TXB6 by software during a communication operation (when bits 7 and 6 (POWER6, TXE6) of asynchronous serial interface operation mode register 6 (ASIM6) are 1 or when bits 7 and 5 (POWER6, RXE6) of ASIM6 are 1).

3. Set transmit data to TXB6 at least one base clock (f_{XCLK6}) after setting TXE6 = 1.

(4) Transmit shift register 6 (TXS6)

This register transmits the data transferred from TXB6 from the TxD6 pin as serial data. Data is transferred from TXB6 immediately after TXB6 is written for the first transmission, or immediately before INTST6 occurs after one frame was transmitted for continuous transmission. Data is transferred from TXB6 and transmitted from the TxD6 pin at the falling edge of the base clock.

TXS6 cannot be directly manipulated by a program.

15.3 Registers Controlling Serial Interface UART6

Serial interface UART6 is controlled by the following nine registers.

- Asynchronous serial interface operation mode register 6 (ASIM6)
- Asynchronous serial interface reception error status register 6 (ASIS6)
- Asynchronous serial interface transmission status register 6 (ASIF6)
- Clock selection register 6 (CKSR6)
- Baud rate generator control register 6 (BRGC6)
- Asynchronous serial interface control register 6 (ASICL6)
- Input switch control register (ISC)
- Port mode register 1 (PM1)
- Port register 1 (P1)

(1) Asynchronous serial interface operation mode register 6 (ASIM6)

This 8-bit register controls the serial communication operations of serial interface UART6.

This register can be set by a 1-bit or 8-bit memory manipulation instruction.

Reset signal generation sets this register to 01H.

Remark ASIM6 can be refreshed (the same value is written) by software during a communication operation (when bits 7 and 6 (POWER6, TXE6) of ASIM6 = 1 or bits 7 and 5 (POWER6, RXE6) of ASIM6 = 1).

Figure 15-5. Format of Asynchronous Serial Interface Operation Mode Register 6 (ASIM6) (1/2)

Address: FF50H After reset: 01H R/W

Symbol	<7>	<6>	<5>	4	3	2	1	0
ASIM6	POWER6	TXE6	RXE6	PS61	PS60	CL6	SL6	ISRM6

POWER6	Enables/disables operation of internal operation clock
0[Note 1]	Disables operation of the internal operation clock (fixes the clock to low level) and asynchronously resets the internal circuit[Note 2].
1	Enables operation of the internal operation clock

TXE6	Enables/disables transmission
0	Disables transmission (synchronously resets the transmission circuit).
1	Enables transmission

RXE6	Enables/disables reception
0	Disables reception (synchronously resets the reception circuit).
1	Enables reception

Notes 1. If POWER6 = 0 is set while transmitting data, the output of the TxD6 pin will be fixed to high level (if TXDLV6 = 0). Furthermore, the input from the RxD6 pin will be fixed to high level.

2. Asynchronous serial interface reception error status register 6 (ASIS6), asynchronous serial interface transmission status register 6 (ASIF6), bit 7 (SBRF6) and bit 6 (SBRT6) of asynchronous serial interface control register 6 (ASICL6), and receive buffer register 6 (RXB6) are reset.

Figure 15-5. Format of Asynchronous Serial Interface Operation Mode Register 6 (ASIM6) (2/2)

PS61	PS60	Transmission operation	Reception operation
0	0	Does not output parity bit.	Reception without parity
0	1	Outputs 0 parity.	Reception as 0 parity[Note]
1	0	Outputs odd parity.	Judges as odd parity.
1	1	Outputs even parity.	Judges as even parity.

CL6	Specifies character length of transmit/receive data
0	Character length of data = 7 bits
1	Character length of data = 8 bits

SL6	Specifies number of stop bits of transmit data
0	Number of stop bits = 1
1	Number of stop bits = 2

ISRM6	Enables/disables occurrence of reception completion interrupt in case of error
0	“INTSRE6” occurs in case of error (at this time, INTSR6 does not occur).
1	“INTSR6” occurs in case of error (at this time, INTSRE6 does not occur).

Note If “reception as 0 parity” is selected, the parity is not judged. Therefore, bit 2 (PE6) of asynchronous serial interface reception error status register 6 (ASIS6) is not set and the error interrupt does not occur.

Cautions
1. **To start the transmission, set POWER6 to 1 and then set TXE6 to 1. To stop the transmission, clear TXE6 to 0, and then clear POWER6 to 0.**
2. **To start the reception, set POWER6 to 1 and then set RXE6 to 1. To stop the reception, clear RXE6 to 0, and then clear POWER6 to 0.**
3. **Set POWER6 to 1 and then set RXE6 to 1 while a high level is input to the RxD6 pin. If POWER6 is set to 1 and RXE6 is set to 1 while a low level is input, reception is started.**
4. **TXE6 and RXE6 are synchronized by the base clock (f_{XCLK6}) set by CKSR6. To enable transmission or reception again, set TXE6 or RXE6 to 1 at least two clocks of the base clock after TXE6 or RXE6 has been cleared to 0. If TXE6 or RXE6 is set within two clocks of the base clock, the transmission circuit or reception circuit may not be initialized.**
5. **Set transmit data to TXB6 at least one base clock (f_{XCLK6}) after setting TXE6 = 1.**
6. **Clear the TXE6 and RXE6 bits to 0 before rewriting the PS61, PS60, and CL6 bits.**
7. **Fix the PS61 and PS60 bits to 0 when used in LIN communication operation.**
8. **Clear TXE6 to 0 before rewriting the SL6 bit. Reception is always performed with “the number of stop bits = 1”, and therefore, is not affected by the set value of the SL6 bit.**
9. **Make sure that RXE6 = 0 when rewriting the ISRM6 bit.**

(2) Asynchronous serial interface reception error status register 6 (ASIS6)

This register indicates an error status on completion of reception by serial interface UART6. It includes three error flag bits (PE6, FE6, OVE6).

This register is read-only by an 8-bit memory manipulation instruction.

Reset signal generation, or clearing bit 7 (POWER6) or bit 5 (RXE6) of ASIM6 to 0 clears this register to 00H. 00H is read when this register is read. If a reception error occurs, read ASIS6 and then read receive buffer register 6 (RXB6) to clear the error flag.

Figure 15-6. Format of Asynchronous Serial Interface Reception Error Status Register 6 (ASIS6)

Address: FF53H After reset: 00H R

Symbol	7	6	5	4	3	2	1	0
ASIS6	0	0	0	0	0	PE6	FE6	OVE6

PE6	Status flag indicating parity error
0	If POWER6 = 0 or RXE6 = 0, or if ASIS6 register is read
1	If the parity of transmit data does not match the parity bit on completion of reception

FE6	Status flag indicating framing error
0	If POWER6 = 0 or RXE6 = 0, or if ASIS6 register is read
1	If the stop bit is not detected on completion of reception

OVE6	Status flag indicating overrun error
0	If POWER6 = 0 or RXE6 = 0, or if ASIS6 register is read
1	If receive data is set to the RXB6 register and the next reception operation is completed before the data is read.

Cautions 1. The operation of the PE6 bit differs depending on the set values of the PS61 and PS60 bits of asynchronous serial interface operation mode register 6 (ASIM6).

2. For the stop bit of the receive data, only the first stop bit is checked regardless of the number of stop bits.

3. If an overrun error occurs, the next receive data is not written to receive buffer register 6 (RXB6) but discarded.

4. If data is read from ASIS6, a wait cycle is generated. Do not read data from ASIS6 when the peripheral hardware clock (f_{PRS}) is stopped. For details, see CHAPTER 36 CAUTIONS FOR WAIT.

(3) Asynchronous serial interface transmission status register 6 (ASIF6)

This register indicates the status of transmission by serial interface UART6. It includes two status flag bits (TXBF6 and TXSF6).

Transmission can be continued without disruption even during an interrupt period, by writing the next data to the TXB6 register after data has been transferred from the TXB6 register to the TXS6 register.

This register is read-only by an 8-bit memory manipulation instruction.

Reset signal generation, or clearing bit 7 (POWER6) or bit 6 (TXE6) of ASIM6 to 0 clears this register to 00H.

Figure 15-7. Format of Asynchronous Serial Interface Transmission Status Register 6 (ASIF6)

Address: FF55H After reset: 00H R

Symbol	7	6	5	4	3	2	1	0
ASIF6	0	0	0	0	0	0	TXBF6	TXSF6

TXBF6	Transmit buffer data flag
0	If POWER6 = 0 or TXE6 = 0, or if data is transferred to transmit shift register 6 (TXS6)
1	If data is written to transmit buffer register 6 (TXB6) (if data exists in TXB6)

TXSF6	Transmit shift register data flag
0	If POWER6 = 0 or TXE6 = 0, or if the next data is not transferred from transmit buffer register 6 (TXB6) after completion of transfer
1	If data is transferred from transmit buffer register 6 (TXB6) (if data transmission is in progress)

Cautions 1. To transmit data continuously, write the first transmit data (first byte) to the TXB6 register. Be sure to check that the TXBF6 flag is "0". If so, write the next transmit data (second byte) to the TXB6 register. If data is written to the TXB6 register while the TXBF6 flag is "1", the transmit data cannot be guaranteed.

2. To initialize the transmission unit upon completion of continuous transmission, be sure to check that the TXSF6 flag is "0" after generation of the transmission completion interrupt, and then execute initialization. If initialization is executed while the TXSF6 flag is "1", the transmit data cannot be guaranteed.

(4) Clock selection register 6 (CKSR6)

This register selects the base clock of serial interface UART6.

CKSR6 can be set by an 8-bit memory manipulation instruction.

Reset signal generation sets this register to 00H.

Remark CKSR6 can be refreshed (the same value is written) by software during a communication operation (when bits 7 and 6 (POWER6, TXE6) of ASIM6 = 1 or bits 7 and 5 (POWER6, RXE6) of ASIM6 = 1).

Figure 15-8. Format of Clock Selection Register 6 (CKSR6)

Address: FF56H After reset: 00H R/W

Symbol	7	6	5	4	3	2	1	0
CKSR6	0	0	0	0	TPS63	TPS62	TPS61	TPS60

TPS63	TPS62	TPS61	TPS60	Base clock (f_{XCLK6}) selection[Note 1]				
					f_{PRS} = 2 MHz	f_{PRS} = 5 MHz	f_{PRS} = 10 MHz	f_{PRS} = 20 MHz
0	0	0	0	f_{PRS}[Note 2]	2 MHz	5 MHz	10 MHz	20 MHz[Note 3]
0	0	0	1	$f_{PRS}/2$	1 MHz	2.5 MHz	5 MHz	10 MHz
0	0	1	0	$f_{PRS}/2^2$	500 kHz	1.25 MHz	2.5 MHz	5 MHz
0	0	1	1	$f_{PRS}/2^3$	250 kHz	625 kHz	1.25 MHz	2.5 MHz
0	1	0	0	$f_{PRS}/2^4$	125 kHz	312.5 kHz	625 kHz	1.25 MHz
0	1	0	1	$f_{PRS}/2^5$	62.5 kHz	156.25 kHz	312.5 kHz	625 kHz
0	1	1	0	$f_{PRS}/2^6$	31.25 kHz	78.13 kHz	156.25 kHz	312.5 kHz
0	1	1	1	$f_{PRS}/2^7$	15.625 kHz	39.06 kHz	78.13 kHz	156.25 kHz
1	0	0	0	$f_{PRS}/2^8$	7.813 kHz	19.53 kHz	39.06 kHz	78.13 kHz
1	0	0	1	$f_{PRS}/2^9$	3.906 kHz	9.77 kHz	19.53 kHz	39.06 kHz
1	0	1	0	$f_{PRS}/2^{10}$	1.953 kHz	4.88 kHz	9.77 kHz	19.53 kHz
1	0	1	1	TM50 output[Note 4]				
Other than above				Setting prohibited				

Notes 1. The frequency that can be used for the peripheral hardware clock (f_{PRS}) differs depending on the power supply voltage and product specifications.

Supply Voltage	Conventional-specification Products (μPD78F05xx and 78F05xxD)	Expanded-specification Products (μPD78F05xxA and 78F05xxDA)
4.0 V ≤ V_{DD} ≤ 5.5 V	f_{PRS} ≤ 20 MHz	f_{PRS} ≤ 20 MHz
2.7 V ≤ V_{DD} < 4.0 V	f_{PRS} ≤ 10 MHz	
1.8 V ≤ V_{DD} < 2.7 V (Standard products and (A) grade products only)	f_{PRS} ≤ 5 MHz	f_{PRS} ≤ 5 MHz

(The values shown in the table above are those when $f_{PRS} = f_{XH}$ (XSEL = 1).)

2. If the peripheral hardware clock (f_{PRS}) operates on the internal high-speed oscillation clock (f_{RH}) (XSEL = 0), when 1.8 V ≤ V_{DD} < 2.7 V, the setting of TPS63 = TPS62 = TPS61 = TPS60 = 0 (base clock: f_{PRS}) is prohibited.

3. This is settable only if 4.0 V ≤ V_{DD} ≤ 5.5 V.

4. Note the following points when selecting the TM50 output as the base clock.

- Mode in which the count clock is cleared and started upon a match of TM50 and CR50 (TMC506 = 0)
  Start the operation of 8-bit timer/event counter 50 first and then enable the timer F/F inversion operation (TMC501 = 1).
- PWM mode (TMC506 = 1)
  Start the operation of 8-bit timer/event counter 50 first and then set the count clock to make the duty = 50%.

It is not necessary to enable (TOE50 = 1) TO50 output in any mode.

Caution Make sure POWER6 = 0 when rewriting TPS63 to TPS60.

Remarks 1. f_{PRS}: Peripheral hardware clock frequency

2. TMC506: Bit 6 of 8-bit timer mode control register 50 (TMC50)
TMC501: Bit 1 of TMC50

(5) Baud rate generator control register 6 (BRGC6)

This register sets the division value of the 8-bit counter of serial interface UART6.

BRGC6 can be set by an 8-bit memory manipulation instruction.

Reset signal generation sets this register to FFH.

Remark BRGC6 can be refreshed (the same value is written) by software during a communication operation (when bits 7 and 6 (POWER6, TXE6) of ASIM6 = 1 or bits 7 and 5 (POWER6, RXE6) of ASIM6 = 1).

Figure 15-9. Format of Baud Rate Generator Control Register 6 (BRGC6)

Address: FF57H After reset: FFH R/W

Symbol	7	6	5	4	3	2	1	0
BRGC6	MDL67	MDL66	MDL65	MDL64	MDL63	MDL62	MDL61	MDL60

MDL67	MDL66	MDL65	MDL64	MDL63	MDL62	MDL61	MDL60	k	Output clock selection of 8-bit counter
0	0	0	0	0	0	×	×	×	Setting prohibited
0	0	0	0	0	1	0	0	4	$f_{XCLK6}/4$
0	0	0	0	0	1	0	1	5	$f_{XCLK6}/5$
0	0	0	0	0	1	1	0	6	$f_{XCLK6}/6$
•	•	•	•	•	•	•	•	•	•
•	•	•	•	•	•	•	•	•	•
•	•	•	•	•	•	•	•	•	•
•	•	•	•	•	•	•	•	•	•
•	•	•	•	•	•	•	•	•	•
1	1	1	1	1	1	0	0	252	$f_{XCLK6}/252$
1	1	1	1	1	1	0	1	253	$f_{XCLK6}/253$
1	1	1	1	1	1	1	0	254	$f_{XCLK6}/254$
1	1	1	1	1	1	1	1	255	$f_{XCLK6}/255$

Cautions 1. Make sure that bit 6 (TXE6) and bit 5 (RXE6) of the ASIM6 register = 0 when rewriting the MDL67 to MDL60 bits.

2. The baud rate is the output clock of the 8-bit counter divided by 2.

Remarks 1. f_{XCLK6}: Frequency of base clock selected by the TPS63 to TPS60 bits of CKSR6 register

2. k: Value set by MDL67 to MDL60 bits (k = 4, 5, 6, ..., 255)

3. ×: Don't care

(6) Asynchronous serial interface control register 6 (ASICL6)

This register controls the serial communication operations of serial interface UART6.

ASICL6 can be set by a 1-bit or 8-bit memory manipulation instruction.

Reset signal generation sets this register to 16H.

Caution ASICL6 can be refreshed (the same value is written) by software during a communication operation (when bits 7 and 6 (POWER6, TXE6) of ASIM6 = 1 or bits 7 and 5 (POWER6, RXE6) of ASIM6 = 1). However, do not set both SBRT6 and SBTT6 to 1 by a refresh operation during SBF reception (SBRT6 = 1) or SBF transmission (until INTST6 occurs since SBTT6 has been set (1)), because it may re-trigger SBF reception or SBF transmission.

Figure 15-10. Format of Asynchronous Serial Interface Control Register 6 (ASICL6) (1/2)

Address: FF58H After reset: 16H R/W[Note]

Symbol	<7>	<6>	5	4	3	2	1	0
ASICL6	SBRF6	SBRT6	SBTT6	SBL62	SBL61	SBL60	DIR6	TXDLV6

SBRF6	SBF reception status flag
0	If POWER6 = 0 and RXE6 = 0 or if SBF reception has been completed correctly
1	SBF reception in progress

SBRT6	SBF reception trigger
0	–
1	SBF reception trigger

SBTT6	SBF transmission trigger
0	–
1	SBF transmission trigger

Note Bit 7 is read-only.

Figure 15-10. Format of Asynchronous Serial Interface Control Register 6 (ASICL6) (2/2)

SBL62	SBL61	SBL60	SBF transmission output width control
1	0	1	SBF is output with 13-bit length.
1	1	0	SBF is output with 14-bit length.
1	1	1	SBF is output with 15-bit length.
0	0	0	SBF is output with 16-bit length.
0	0	1	SBF is output with 17-bit length.
0	1	0	SBF is output with 18-bit length.
0	1	1	SBF is output with 19-bit length.
1	0	0	SBF is output with 20-bit length.

DIR6	First-bit specification
0	MSB
1	LSB

TXDLV6	Enables/disables inverting TxD6 output
0	Normal output of TxD6
1	Inverted output of TxD6

Cautions
1. **In the case of an SBF reception error, the mode returns to the SBF reception mode. The status of the SBRF6 flag is held (1).**
2. **Before setting the SBRT6 bit, make sure that bit 7 (POWER6) and bit 5 (RXE6) of ASIM6 = 1. After setting the SBRT6 bit to 1, do not clear it to 0 before SBF reception is completed (before an interrupt request signal is generated).**
3. **The read value of the SBRT6 bit is always 0. SBRT6 is automatically cleared to 0 after SBF reception has been correctly completed.**
4. **Before setting the SBTT6 bit to 1, make sure that bit 7 (POWER6) and bit 6 (TXE6) of ASIM6 = 1. After setting the SBTT6 bit to 1, do not clear it to 0 before SBF transmission is completed (before an interrupt request signal is generated).**
5. **The read value of the SBTT6 bit is always 0. SBTT6 is automatically cleared to 0 at the end of SBF transmission.**
6. **Do not set the SBRT6 bit to 1 during reception, and do not set the SBTT6 bit to 1 during transmission.**
7. **Before rewriting the DIR6 and TXDLV6 bits, clear the TXE6 and RXE6 bits to 0.**
8. **When the TXDLV6 bit is set to 1 (inverted TxD6 output), the TxD6/SCLA0/P60 pin cannot be used as a general-purpose port, regardless of the settings of POWER6 and TXE6. When using the TxD6/SCLA0/P60 pin as a general-purpose port, clear the TXDLV6 bit to 0 (normal TxD6 output).**

(7) Input switch control register (ISC)

The input switch control register (ISC) is used to receive a status signal transmitted from the master during LIN (Local Interconnect Network) reception.

The signal input from the P14/RxD6 pin is selected as the input source of INTP0 and TI000 when ISC0 and ISC1 are set to 1.

This register can be set by a 1-bit or 8-bit memory manipulation instruction.

Reset signal generation sets this register to 00H.

Figure 15-11. Format of Input Switch Control Register (ISC)

Address: FF4FH After reset: 00H R/W

Symbol	7	6	5	4	3	2	1	0
ISC	0	0	0	0	0	0	ISC1	ISC0

ISC1	TI000 input source selection
0	TI000 (P00)
1	RxD6 (P14)

ISC0	INTP0 input source selection
0	INTP0 (P120)
1	RxD6 (P14)

(8) Port mode register 1 (PM1)

This register sets port 1 input/output in 1-bit units.

When using the P13/TxD6 pin for serial interface data output, clear PM13 to 0 and set the output latch of P13 to 1.

When using the P14/RxD6 pin for serial interface data input, set PM14 to 1. The output latch of P14 at this time may be 0 or 1.

PM1 can be set by a 1-bit or 8-bit memory manipulation instruction.

Reset signal generation sets this register to FFH.

Figure 15-12. Format of Port Mode Register 1 (PM1)

Address: FF21H After reset: FFH R/W

Symbol	7	6	5	4	3	2	1	0
PM1	PM17	PM16	PM15	PM14	PM13	PM12	PM11	PM10

PM1n	P1n pin I/O mode selection (n = 0 to 7)
0	Output mode (output buffer on)
1	Input mode (output buffer off)

15.4 Operation of Serial Interface UART6

Serial interface UART6 has the following two modes.

- Operation stop mode
- Asynchronous serial interface (UART) mode

15.4.1 Operation stop mode

In this mode, serial communication cannot be executed; therefore, the power consumption can be reduced. In addition, the pins can be used as ordinary port pins in this mode. To set the operation stop mode, clear bits 7, 6, and 5 (POWER6, TXE6, and RXE6) of ASIM6 to 0.

(1) Register used

The operation stop mode is set by asynchronous serial interface operation mode register 6 (ASIM6).

ASIM6 can be set by a 1-bit or 8-bit memory manipulation instruction.

Reset signal generation sets this register to 01H.

Address: FF50H After reset: 01H R/W

Symbol	<7>	<6>	<5>	4	3	2	1	0
ASIM6	POWER6	TXE6	RXE6	PS61	PS60	CL6	SL6	ISRM6

POWER6	Enables/disables operation of internal operation clock
0[Note 1]	Disables operation of the internal operation clock (fixes the clock to low level) and asynchronously resets the internal circuit[Note 2].

TXE6	Enables/disables transmission
0	Disables transmission operation (synchronously resets the transmission circuit).

RXE6	Enables/disables reception
0	Disables reception (synchronously resets the reception circuit).

Notes 1. If POWER6 = 0 is set while transmitting data, the output of the TxD6 pin will be fixed to high level (if TXDLV6 = 0). Furthermore, the input from the RxD6 pin will be fixed to high level.

2. Asynchronous serial interface reception error status register 6 (ASIS6), asynchronous serial interface transmission status register 6 (ASIF6), bit 7 (SBRF6) and bit 6 (SBRT6) of asynchronous serial interface control register 6 (ASICL6), and receive buffer register 6 (RXB6) are reset.

Caution Clear POWER6 to 0 after clearing TXE6 and RXE6 to 0 to stop the operation.
To start the communication, set POWER6 to 1, and then set TXE6 or RXE6 to 1.

Remark To use the RxD6/P14 and TxD6/P13 pins as general-purpose port pins, see **CHAPTER 5 PORT FUNCTIONS**.

15.4.2 Asynchronous serial interface (UART) mode

In this mode, data of 1 byte is transmitted/received following a start bit, and a full-duplex operation can be performed.

A dedicated UART baud rate generator is incorporated, so that communication can be executed at a wide range of baud rates.

(1) Registers used

- Asynchronous serial interface operation mode register 6 (ASIM6)
- Asynchronous serial interface reception error status register 6 (ASIS6)
- Asynchronous serial interface transmission status register 6 (ASIF6)
- Clock selection register 6 (CKSR6)
- Baud rate generator control register 6 (BRGC6)
- Asynchronous serial interface control register 6 (ASICL6)
- Input switch control register (ISC)
- Port mode register 1 (PM1)
- Port register 1 (P1)

The basic procedure of setting an operation in the UART mode is as follows.

<1> Set the CKSR6 register (see **Figure 15-8**).
<2> Set the BRGC6 register (see **Figure 15-9**).
<3> Set bits 0 to 4 (ISRM6, SL6, CL6, PS60, PS61) of the ASIM6 register (see **Figure 15-5**).
<4> Set bits 0 and 1 (TXDLV6, DIR6) of the ASICL6 register (see **Figure 15-10**).
<5> Set bit 7 (POWER6) of the ASIM6 register to 1.
<6> Set bit 6 (TXE6) of the ASIM6 register to 1. → Transmission is enabled.
Set bit 5 (RXE6) of the ASIM6 register to 1. → Reception is enabled.
<7> Write data to transmit buffer register 6 (TXB6). → Data transmission is started.

Caution Take relationship with the other party of communication when setting the port mode register and port register.

The relationship between the register settings and pins is shown below.

Table 15-2. Relationship Between Register Settings and Pins

POWER6	TXE6	RXE6	PM13	P13	PM14	P14	UART6 Operation	Pin Function	
								TxD6/P13	RxD6/P14
0	0	0	×Note	×Note	×Note	×Note	Stop	P13	P14
1	0	1	×Note	×Note	1	×	Reception	P13	RxD6
	1	0	0	1	×Note	×Note	Transmission	TxD6	P14
	1	1	0	1	1	×	Transmission/ reception	TxD6	RxD6

Note Can be set as port function.

Remark ×: don't care
POWER6: Bit 7 of asynchronous serial interface operation mode register 6 (ASIM6)
TXE6: Bit 6 of ASIM6
RXE6: Bit 5 of ASIM6
PM1×: Port mode register
P1×: Port output latch

(2) Communication operation

(a) Format and waveform example of normal transmit/receive data

Figures 15-13 and 15-14 show the format and waveform example of the normal transmit/receive data.

Figure 15-13. Format of Normal UART Transmit/Receive Data

1. LSB-first transmission/reception

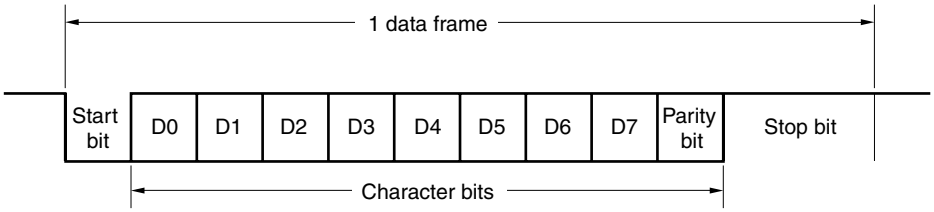

2. MSB-first transmission/reception

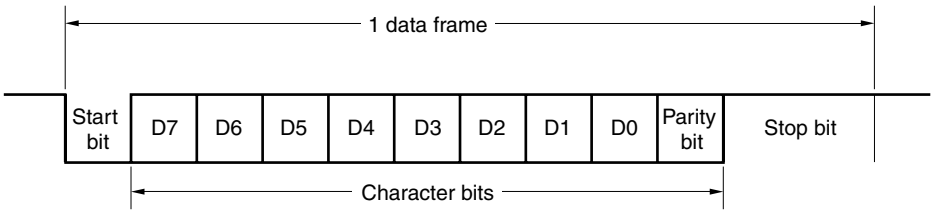

One data frame consists of the following bits.

- Start bit ... 1 bit
- Character bits ... 7 or 8 bits
- Parity bit ... Even parity, odd parity, 0 parity, or no parity
- Stop bit ... 1 or 2 bits

The character bit length, parity, and stop bit length in one data frame are specified by asynchronous serial interface operation mode register 6 (ASIM6).

Whether data is communicated with the LSB or MSB first is specified by bit 1 (DIR6) of asynchronous serial interface control register 6 (ASICL6).

Whether the TxD6 pin outputs normal or inverted data is specified by bit 0 (TXDLV6) of ASICL6.

Figure 15-14. Example of Normal UART Transmit/Receive Data Waveform

1. **Data length: 8 bits, LSB first, Parity: Even parity, Stop bit: 1 bit, Communication data: 55H**

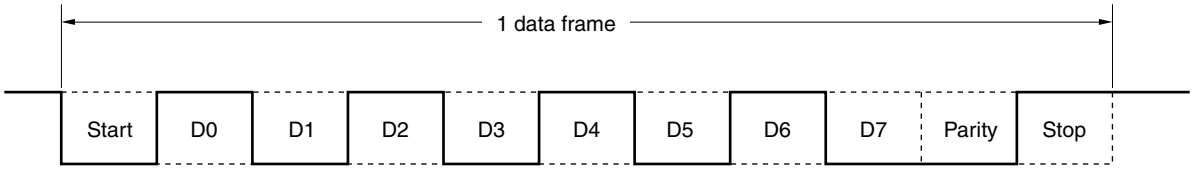

2. **Data length: 8 bits, MSB first, Parity: Even parity, Stop bit: 1 bit, Communication data: 55H**

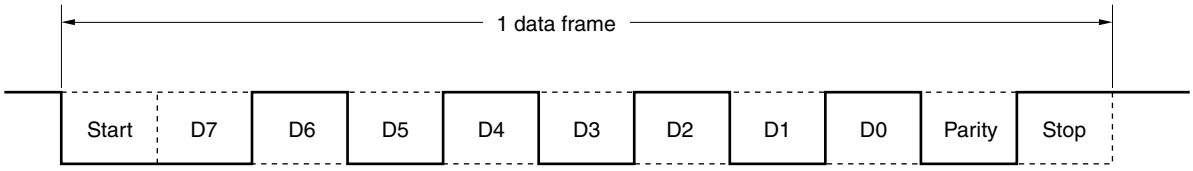

3. **Data length: 8 bits, MSB first, Parity: Even parity, Stop bit: 1 bit, Communication data: 55H, TxD6 pin inverted output**

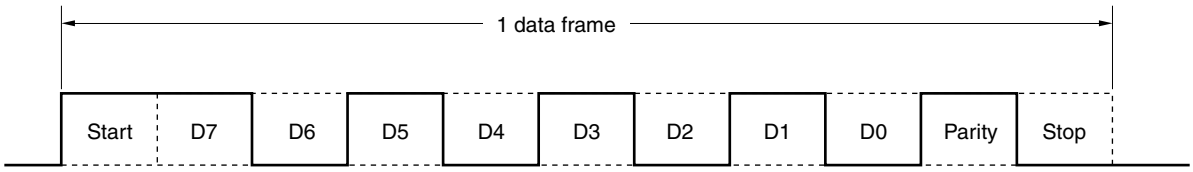

4. **Data length: 7 bits, LSB first, Parity: Odd parity, Stop bit: 2 bits, Communication data: 36H**

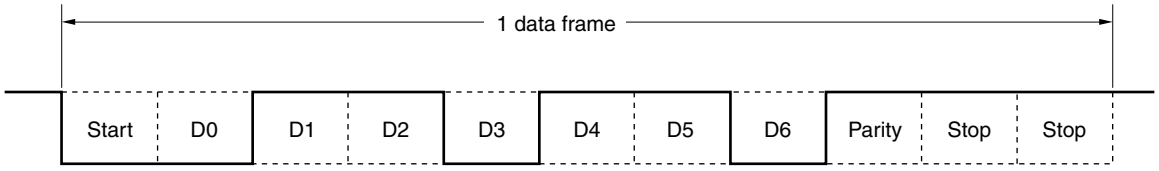

5. **Data length: 8 bits, LSB first, Parity: None, Stop bit: 1 bit, Communication data: 87H**

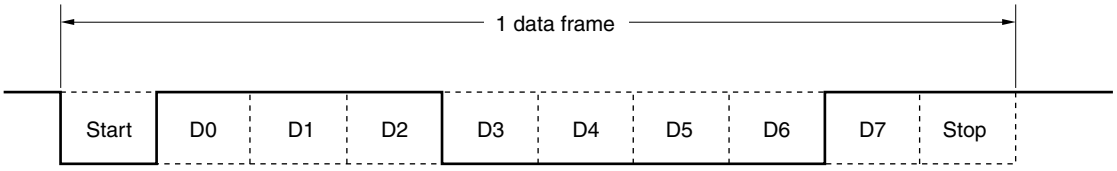

(b) Parity types and operation

The parity bit is used to detect a bit error in communication data. Usually, the same type of parity bit is used on both the transmission and reception sides. With even parity and odd parity, a 1-bit (odd number) error can be detected. With zero parity and no parity, an error cannot be detected.

Caution Fix the PS61 and PS60 bits to 0 when the device is used in LIN communication operation.

(i) Even parity

- Transmission

  Transmit data, including the parity bit, is controlled so that the number of bits that are “1” is even.
  The value of the parity bit is as follows.

  If transmit data has an odd number of bits that are “1”: 1
  If transmit data has an even number of bits that are “1”: 0

- Reception

  The number of bits that are “1” in the receive data, including the parity bit, is counted. If it is odd, a parity error occurs.

(ii) Odd parity

- Transmission

  Unlike even parity, transmit data, including the parity bit, is controlled so that the number of bits that are “1” is odd.

  If transmit data has an odd number of bits that are “1”: 0
  If transmit data has an even number of bits that are “1”: 1

- Reception

  The number of bits that are “1” in the receive data, including the parity bit, is counted. If it is even, a parity error occurs.

(iii) 0 parity

The parity bit is cleared to 0 when data is transmitted, regardless of the transmit data.
The parity bit is not detected when the data is received. Therefore, a parity error does not occur regardless of whether the parity bit is “0” or “1”.

(iv) No parity

No parity bit is appended to the transmit data.
Reception is performed assuming that there is no parity bit when data is received. Because there is no parity bit, a parity error does not occur.

(c) Normal transmission

When bit 7 (POWER6) of asynchronous serial interface operation mode register 6 (ASIM6) is set to 1 and bit 6 (TXE6) of ASIM6 is then set to 1, transmission is enabled. Transmission can be started by writing transmit data to transmit buffer register 6 (TXB6). The start bit, parity bit, and stop bit are automatically appended to the data.

When transmission is started, the data in TXB6 is transferred to transmit shift register 6 (TXS6). After that, the transmit data is sequentially output from TXS6 to the TxD6 pin. When transmission is completed, the parity and stop bits set by ASIM6 are appended and a transmission completion interrupt request (INTST6) is generated.

Transmission is stopped until the data to be transmitted next is written to TXB6.

Figure 15-15 shows the timing of the transmission completion interrupt request (INTST6). This interrupt occurs as soon as the last stop bit has been output.

Figure 15-15. Normal Transmission Completion Interrupt Request Timing

1. Stop bit length: 1

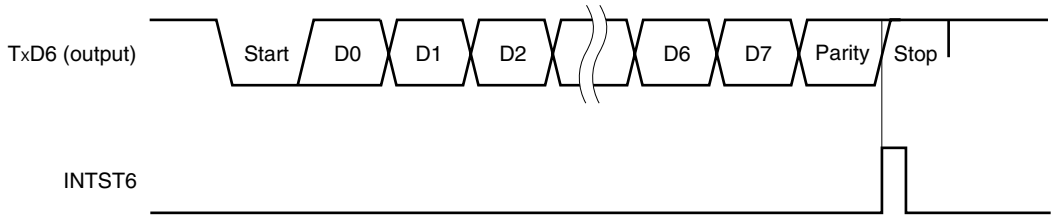

2. Stop bit length: 2

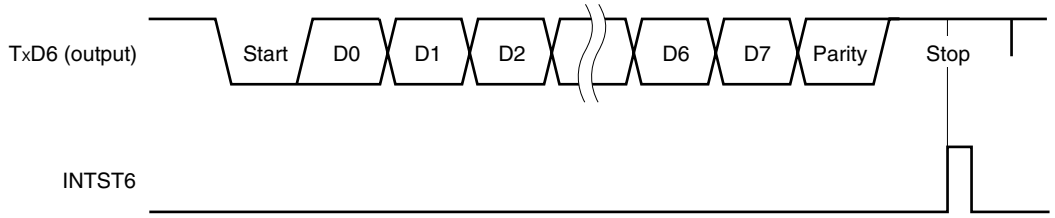

(d) Continuous transmission

The next transmit data can be written to transmit buffer register 6 (TXB6) as soon as transmit shift register 6 (TXS6) has started its shift operation. Consequently, even while the INTST6 interrupt is being serviced after transmission of one data frame, data can be continuously transmitted and an efficient communication rate can be realized. In addition, the TXB6 register can be efficiently written twice (2 bytes) without having to wait for the transmission time of one data frame, by reading bit 0 (TXSF6) of asynchronous serial interface transmission status register 6 (ASIF6) when the transmission completion interrupt has occurred.

To transmit data continuously, be sure to reference the ASIF6 register to check the transmission status and whether the TXB6 register can be written, and then write the data.

Cautions 1. The TXBF6 and TXSF6 flags of the ASIF6 register change from "10" to "11", and to "01" during continuous transmission. To check the status, therefore, do not use a combination of the TXBF6 and TXSF6 flags for judgment. Read only the TXBF6 flag when executing continuous transmission.

2. When the device is use in LIN communication operation, the continuous transmission function cannot be used. Make sure that asynchronous serial interface transmission status register 6 (ASIF6) is 00H before writing transmit data to transmit buffer register 6 (TXB6).

TXBF6	Writing to TXB6 Register
0	Writing enabled
1	Writing disabled

Caution To transmit data continuously, write the first transmit data (first byte) to the TXB6 register. Be sure to check that the TXBF6 flag is "0". If so, write the next transmit data (second byte) to the TXB6 register. If data is written to the TXB6 register while the TXBF6 flag is "1", the transmit data cannot be guaranteed.

The communication status can be checked using the TXSF6 flag.

TXSF6	Transmission Status
0	Transmission is completed.
1	Transmission is in progress.

Cautions 1. To initialize the transmission unit upon completion of continuous transmission, be sure to check that the TXSF6 flag is "0" after generation of the transmission completion interrupt, and then execute initialization. If initialization is executed while the TXSF6 flag is "1", the transmit data cannot be guaranteed.

2. During continuous transmission, the next transmission may complete before execution of INTST6 interrupt servicing after transmission of one data frame. As a countermeasure, detection can be performed by developing a program that can count the number of transmit data and by referencing the TXSF6 flag.

Figure 15-16 shows an example of the continuous transmission processing flow.

Figure 15-16. Example of Continuous Transmission Processing Flow

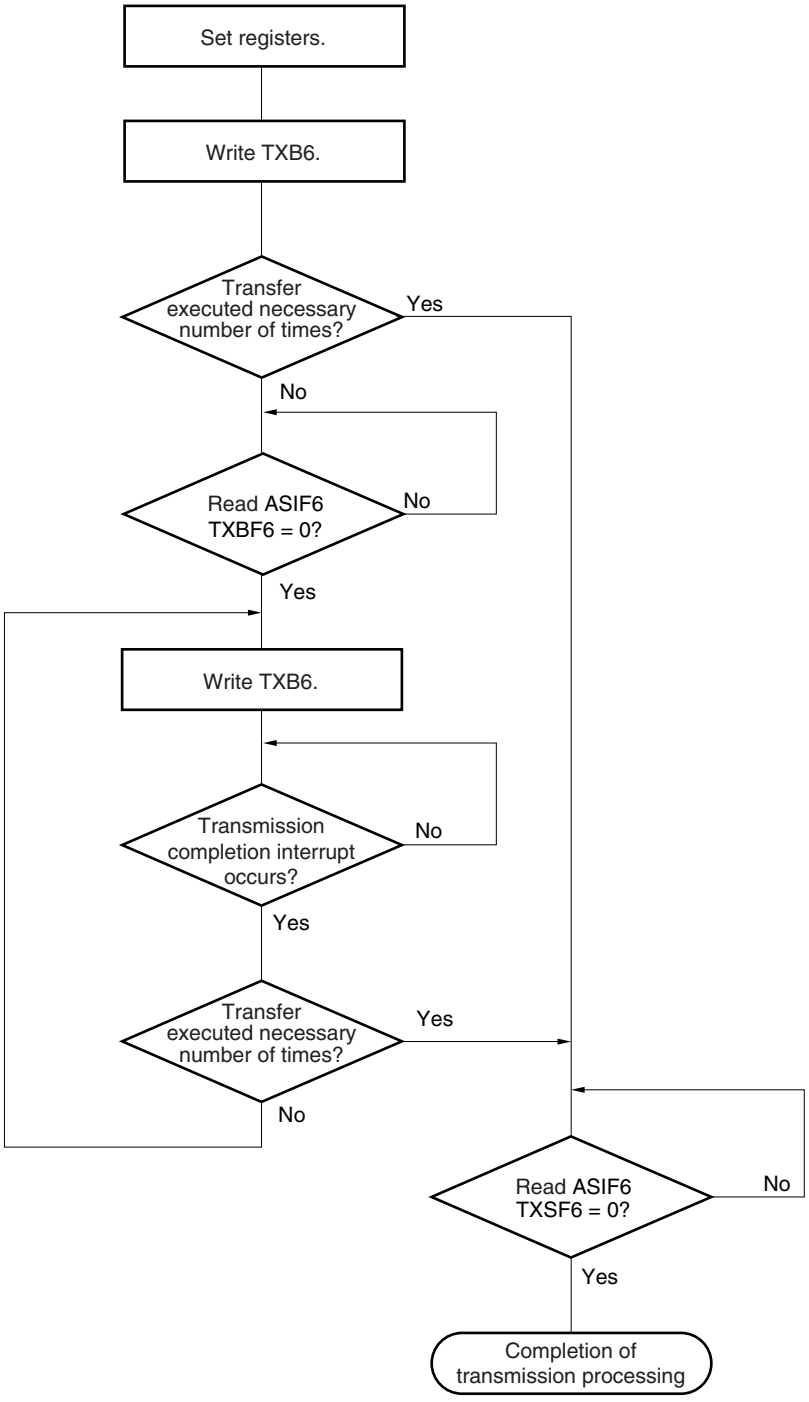

Remark TXB6: Transmit buffer register 6
ASIF6: Asynchronous serial interface transmission status register 6
TXBF6: Bit 1 of ASIF6 (transmit buffer data flag)
TXSF6: Bit 0 of ASIF6 (transmit shift register data flag)

Figure 15-17 shows the timing of starting continuous transmission, and Figure 15-18 shows the timing of ending continuous transmission.

Figure 15-17. Timing of Starting Continuous Transmission

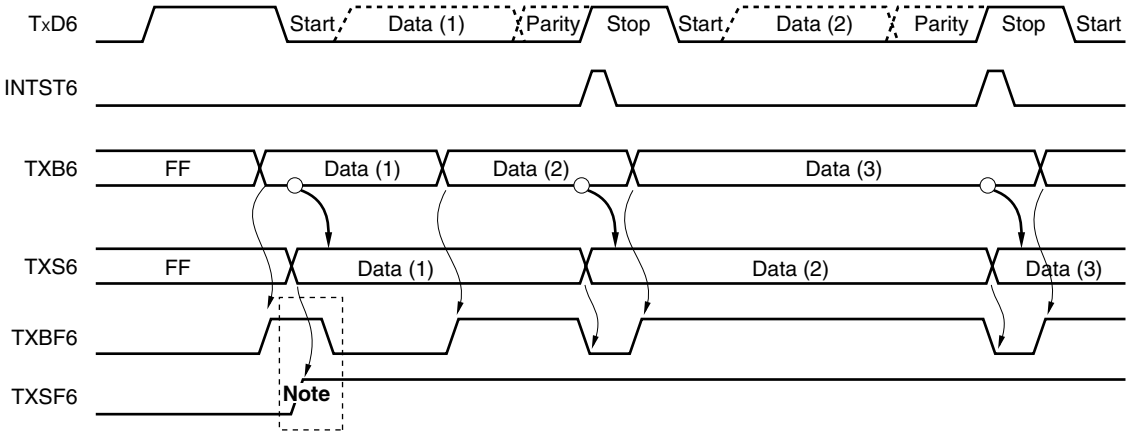

Note When ASIF6 is read, there is a period in which TXBF6 and TXSF6 = 1, 1. Therefore, judge whether writing is enabled using only the TXBF6 bit.

Remark TxD6: TxD6 pin (output)
INTST6: Interrupt request signal
TXB6: Transmit buffer register 6
TXS6: Transmit shift register 6
ASIF6: Asynchronous serial interface transmission status register 6
TXBF6: Bit 1 of ASIF6
TXSF6: Bit 0 of ASIF6

Figure 15-18. Timing of Ending Continuous Transmission

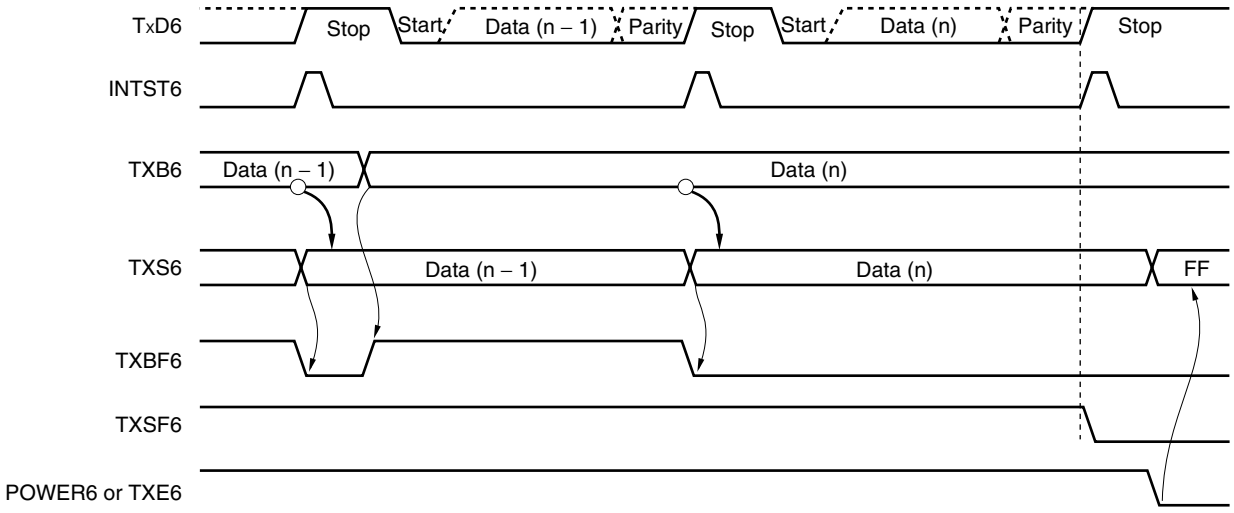

Remark TxD6: TxD6 pin (output)
INTST6: Interrupt request signal
TXB6: Transmit buffer register 6
TXS6: Transmit shift register 6
ASIF6: Asynchronous serial interface transmission status register 6
TXBF6: Bit 1 of ASIF6
TXSF6: Bit 0 of ASIF6
POWER6: Bit 7 of asynchronous serial interface operation mode register (ASIM6)
TXE6: Bit 6 of asynchronous serial interface operation mode register (ASIM6)

(e) Normal reception

Reception is enabled and the RxD6 pin input is sampled when bit 7 (POWER6) of asynchronous serial interface operation mode register 6 (ASIM6) is set to 1 and then bit 5 (RXE6) of ASIM6 is set to 1.

The 8-bit counter of the baud rate generator starts counting when the falling edge of the RxD6 pin input is detected. When the set value of baud rate generator control register 6 (BRGC6) has been counted, the RxD6 pin input is sampled again (in Figur▽15-19). If the RxD6 pin is low level at this time, it is recognized as a start bit.

When the start bit is detected, reception is started, and serial data is sequentially stored in the receive shift register (RXS6) at the set baud rate. When the stop bit has been received, the reception completion interrupt (INTSR6) is generated and the data of RXS6 is written to receive buffer register 6 (RXB6). If an overrun error (OVE6) occurs, however, the receive data is not written to RXB6.

Even if a parity error (PE6) occurs while reception is in progress, reception continues to the reception position of the stop bit, and a reception error interrupt (INTSR6/INTSRE6) is generated on completion of reception.

Figure 15-19. Reception Completion Interrupt Request Timing

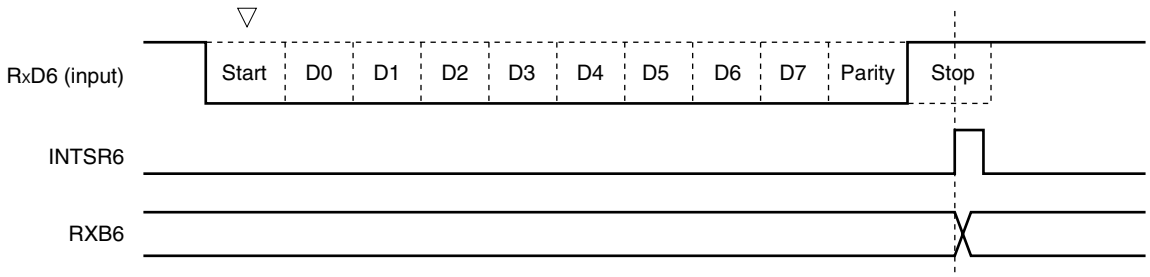

Cautions 1. If a reception error occurs, read ASIS6 and then RXB6 to clear the error flag. Otherwise, an overrun error will occur when the next data is received, and the reception error status will persist.

2. Reception is always performed with the "number of stop bits = 1". The second stop bit is ignored.

3. Be sure to read asynchronous serial interface reception error status register 6 (ASIS6) before reading RXB6.

(f) Reception error

Three types of errors may occur during reception: a parity error, framing error, or overrun error. If the error flag of asynchronous serial interface reception error status register 6 (ASIS6) is set as a result of data reception, a reception error interrupt request (INTSR6/INTSRE6) is generated.

Which error has occurred during reception can be identified by reading the contents of ASIS6 in the reception error interrupt (INTSR6/INTSRE6) servicing (see **Figure 15-6**).

The contents of ASIS6 are cleared to 0 when ASIS6 is read.

Table 15-3. Cause of Reception Error

Reception Error	Cause
Parity error	The parity specified for transmission does not match the parity of the receive data.
Framing error	Stop bit is not detected.
Overrun error	Reception of the next data is completed before data is read from receive buffer register 6 (RXB6).

The reception error interrupt can be separated into reception completion interrupt (INTSR6) and error interrupt (INTSRE6) by clearing bit 0 (ISRM6) of asynchronous serial interface operation mode register 6 (ASIM6) to 0.

Figure 15-20. Reception Error Interrupt

1. If ISRM6 is cleared to 0 (reception completion interrupt (INTSR6) and error interrupt (INTSRE6) are separated)

(a) No error during reception

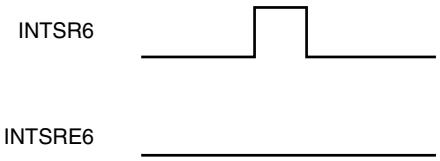

(b) Error during reception

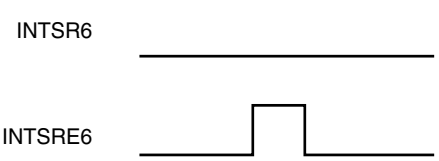

2. If ISRM6 is set to 1 (error interrupt is included in INTSR6)

(a) No error during reception

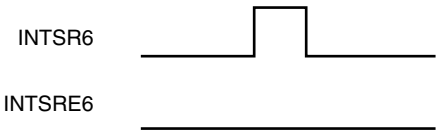

(b) Error during reception

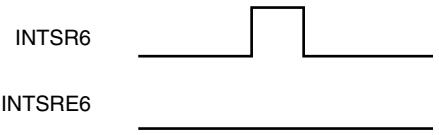

(g) Noise filter of receive data

The RxD6 signal is sampled with the base clock output by the prescaler block.

If two sampled values are the same, the output of the match detector changes, and the data is sampled as input data.

Because the circuit is configured as shown in Figure 15-21, the internal processing of the reception operation is delayed by two clocks from the external signal status.

Figure 15-21. Noise Filter Circuit

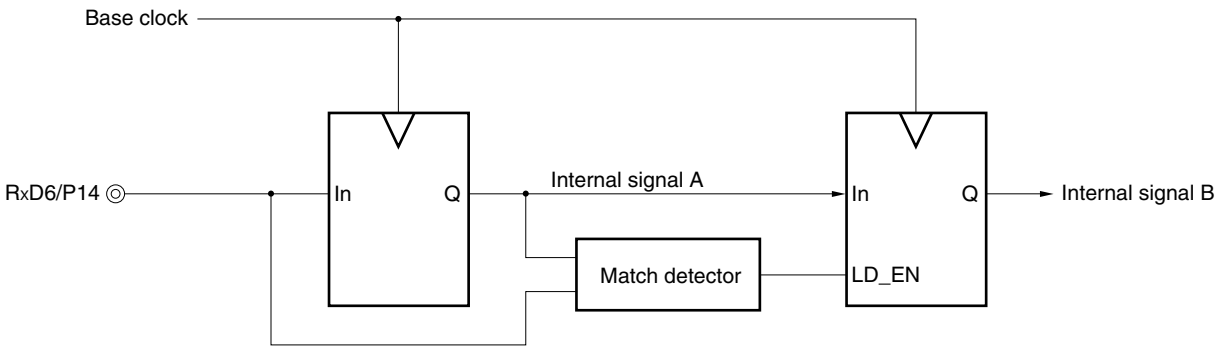

(h) SBF transmission

When the device is use in LIN communication operation, the SBF (Synchronous Break Field) transmission control function is used for transmission. For the transmission operation of LIN, see **Figure 15-1 LIN Transmission Operation**.

When bit 7 (POWER6) of asynchronous serial interface mode register 6 (ASIM6) is set to 1, the TxD6 pin outputs high level. Next, when bit 6 (TXE6) of ASIM6 is set to 1, the transmission enabled status is entered, and SBF transmission is started by setting bit 5 (SBTT6) of asynchronous serial interface control register 6 (ASICL6) to 1.

Thereafter, a low level of bits 13 to 20 (set by bits 4 to 2 (SBL62 to SBL60) of ASICL6) is output. Following the end of SBF transmission, the transmission completion interrupt request (INTST6) is generated and SBTT6 is automatically cleared. Thereafter, the normal transmission mode is restored.

Transmission is suspended until the data to be transmitted next is written to transmit buffer register 6 (TXB6), or until SBTT6 is set to 1.

Figure 15-22. SBF Transmission

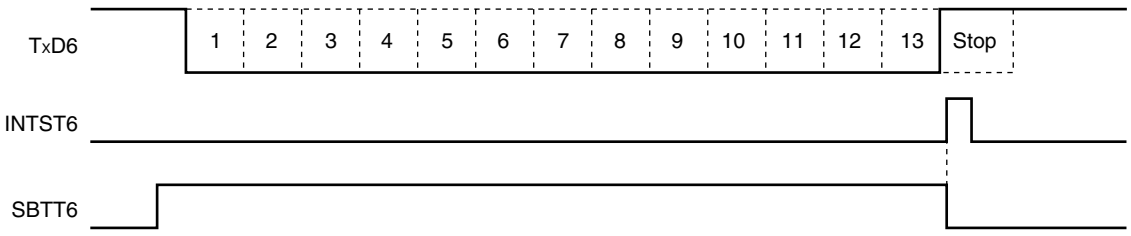

Remark TxD6: TxD6 pin (output)
INTST6: Transmission completion interrupt request
SBTT6: Bit 5 of asynchronous serial interface control register 6 (ASICL6)

(i) SBF reception

When the device is used in LIN communication operation, the SBF (Synchronous Break Field) reception control function is used for reception. For the reception operation of LIN, see **Figure 15-2 LIN Reception Operation**.

Reception is enabled when bit 7 (POWER6) of asynchronous serial interface operation mode register 6 (ASIM6) is set to 1 and then bit 5 (RXE6) of ASIM6 is set to 1. SBF reception is enabled when bit 6 (SBRT6) of asynchronous serial interface control register 6 (ASICL6) is set to 1. In the SBF reception enabled status, the RxD6 pin is sampled and the start bit is detected in the same manner as the normal reception enable status.

When the start bit has been detected, reception is started, and serial data is sequentially stored in the receive shift register 6 (RXS6) at the set baud rate. When the stop bit is received and if the width of SBF is 11 bits or more, a reception completion interrupt request (INTSR6) is generated as normal processing. At this time, the SBRF6 and SBRT6 bits are automatically cleared, and SBF reception ends. Detection of errors, such as OVE6, PE6, and FE6 (bits 0 to 2 of asynchronous serial interface reception error status register 6 (ASIS6)) is suppressed, and error detection processing of UART communication is not performed. In addition, data transfer between receive shift register 6 (RXS6) and receive buffer register 6 (RXB6) is not performed, and the reset value of FFH is retained. If the width of SBF is 10 bits or less, an interrupt does not occur as error processing after the stop bit has been received, and the SBF reception mode is restored. In this case, the SBRF6 and SBRT6 bits are not cleared.

Figure 15-23. SBF Reception

1. Normal SBF reception (stop bit is detected with a width of more than 10.5 bits)

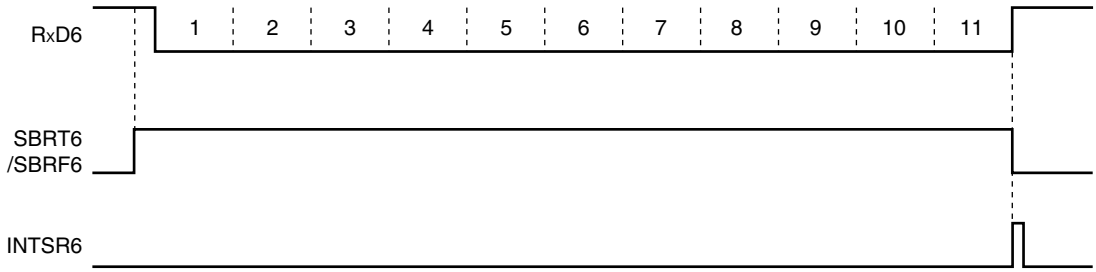

2. SBF reception error (stop bit is detected with a width of 10.5 bits or less)

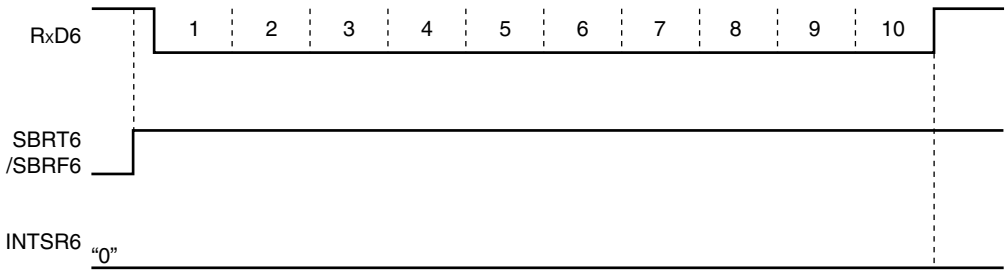

Remark RxD6: RxD6 pin (input)
SBRT6: Bit 6 of asynchronous serial interface control register 6 (ASICL6)
SBRF6: Bit 7 of ASICL6
INTSR6: Reception completion interrupt request

15.4.3 Dedicated baud rate generator

The dedicated baud rate generator consists of a source clock selector and an 8-bit programmable counter, and generates a serial clock for transmission/reception of UART6.

Separate 8-bit counters are provided for transmission and reception.

(1) Configuration of baud rate generator

- Base clock
  The clock selected by bits 3 to 0 (TPS63 to TPS60) of clock selection register 6 (CKSR6) is supplied to each module when bit 7 (POWER6) of asynchronous serial interface operation mode register 6 (ASIM6) is 1. This clock is called the base clock and its frequency is called f_{XCLK6}. The base clock is fixed to low level when POWER6 = 0.

- Transmission counter
  This counter stops operation, cleared to 0, when bit 7 (POWER6) or bit 6 (TXE6) of asynchronous serial interface operation mode register 6 (ASIM6) is 0.
  It starts counting when POWER6 = 1 and TXE6 = 1.
  The counter is cleared to 0 when the first data transmitted is written to transmit buffer register 6 (TXB6).
  If data are continuously transmitted, the counter is cleared to 0 again when one frame of data has been completely transmitted. If there is no data to be transmitted next, the counter is not cleared to 0 and continues counting until POWER6 or TXE6 is cleared to 0.

- Reception counter
  This counter stops operation, cleared to 0, when bit 7 (POWER6) or bit 5 (RXE6) of asynchronous serial interface operation mode register 6 (ASIM6) is 0.
  It starts counting when the start bit has been detected.
  The counter stops operation after one frame has been received, until the next start bit is detected.

Figure 15-24. Configuration of Baud Rate Generator

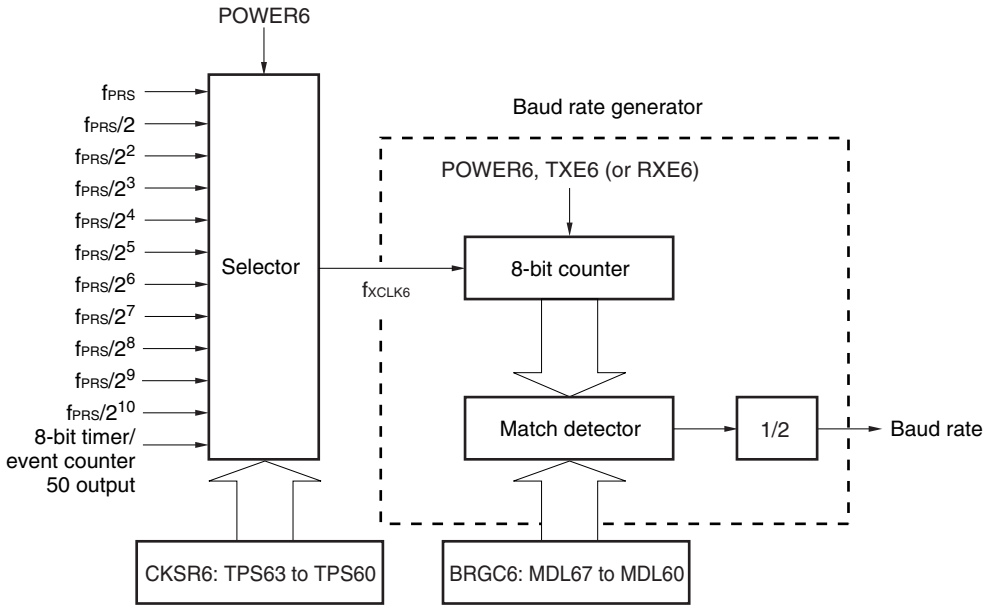

Remark POWER6: Bit 7 of asynchronous serial interface operation mode register 6 (ASIM6)
TXE6: Bit 6 of ASIM6
RXE6: Bit 5 of ASIM6
CKSR6: Clock selection register 6
BRGC6: Baud rate generator control register 6

(2) Generation of serial clock

A serial clock to be generated can be specified by using clock selection register 6 (CKSR6) and baud rate generator control register 6 (BRGC6).

The clock to be input to the 8-bit counter can be set by bits 3 to 0 (TPS63 to TPS60) of CKSR6 and the division value ($f_{XCLK6}/4$ to $f_{XCLK6}/255$) of the 8-bit counter can be set by bits 7 to 0 (MDL67 to MDL60) of BRGC6.

15.4.4 Calculation of baud rate

(1) Baud rate calculation expression

The baud rate can be calculated by the following expression.

- Baud rate = $\frac{f_{XCLK6}}{2 \times k}$ [bps]

f_{XCLK6}: Frequency of base clock selected by TPS63 to TPS60 bits of CKSR6 register
k: Value set by MDL67 to MDL60 bits of BRGC6 register (k = 4, 5, 6, ..., 255)

Table 15-4. Set Value of TPS63 to TPS60

TPS63	TPS62	TPS61	TPS60	Base Clock (f_{XCLK6}) Selection[Note 1]				
					f_{PRS} = 2 MHz	f_{PRS} = 5 MHz	f_{PRS} = 10 MHz	f_{PRS} = 20 MHz
0	0	0	0	f_{PRS}[Note 2]	2 MHz	5 MHz	10 MHz	20 MHz[Note 3]
0	0	0	1	$f_{PRS}/2$	1 MHz	2.5 MHz	5 MHz	10 MHz
0	0	1	0	$f_{PRS}/2^2$	500 kHz	1.25 MHz	2.5 MHz	5 MHz
0	0	1	1	$f_{PRS}/2^3$	250 kHz	625 kHz	1.25 MHz	2.5 MHz
0	1	0	0	$f_{PRS}/2^4$	125 kHz	312.5 kHz	625 kHz	1.25 MHz
0	1	0	1	$f_{PRS}/2^5$	62.5 kHz	156.25 kHz	312.5 kHz	625 kHz
0	1	1	0	$f_{PRS}/2^6$	31.25 kHz	78.13 kHz	156.25 kHz	312.5 kHz
0	1	1	1	$f_{PRS}/2^7$	15.625 kHz	39.06 kHz	78.13 kHz	156.25 kHz
1	0	0	0	$f_{PRS}/2^8$	7.813 kHz	19.53 kHz	39.06 kHz	78.13 kHz
1	0	0	1	$f_{PRS}/2^9$	3.906 kHz	9.77 kHz	19.53 kHz	39.06 kHz
1	0	1	0	$f_{PRS}/2^{10}$	1.953 kHz	4.88 kHz	9.77 kHz	19.53 kHz
1	0	1	1	TM50 output[Note 4]				
Other than above				Setting prohibited				

Notes 1. The frequency that can be used for the peripheral hardware clock (f_{PRS}) differs depending on the power supply voltage and product specifications.

Supply Voltage	Conventional-specification Products (μPD78F05xx and 78F05xxD)	Expanded-specification Products (μPD78F05xxA and 78F05xxDA)
$4.0\ V \le V_{DD} \le 5.5\ V$	$f_{PRS} \le 20$ MHz	$f_{PRS} \le 20$ MHz
$2.7\ V \le V_{DD} < 4.0\ V$	$f_{PRS} \le 10$ MHz	
$1.8\ V \le V_{DD} < 2.7\ V$ (Standard products and (A) grade products only)	$f_{PRS} \le 5$ MHz	$f_{PRS} \le 5$ MHz

(The values shown in the table above are those when $f_{PRS} = f_{XH}$ (XSEL = 1).)

2. If the peripheral hardware clock (f_{PRS}) operates on the internal high-speed oscillation clock (f_{RH}) (XSEL = 0), when $1.8\ V \le V_{DD} < 2.7\ V$, the setting of TPS63 = TPS62 = TPS61 = TPS60 = 0 (base clock: f_{PRS}) is prohibited.

3. This is settable only if $4.0\ V \le V_{DD} \le 5.5\ V$.

4. Note the following points when selecting the TM50 output as the base clock.

- Mode in which the count clock is cleared and started upon a match of TM50 and CR50 (TMC506 = 0)

  Start the operation of 8-bit timer/event counter 50 first and then enable the timer F/F inversion operation (TMC501 = 1).
- PWM mode (TMC506 = 1)

  Start the operation of 8-bit timer/event counter 50 first and then set the count clock to make the duty = 50%.

It is not necessary to enable (TOE50 = 1) TO50 output in any mode.

(2) Error of baud rate

The baud rate error can be calculated by the following expression.

- Error (%) = $\left(\frac{\text{Actual baud rate (baud rate with error)}}{\text{Desired baud rate (correct baud rate)}} - 1\right) \times 100$ [%]

Cautions 1. Keep the baud rate error during transmission to within the permissible error range at the reception destination.

2. Make sure that the baud rate error during reception satisfies the range shown in (4) Permissible baud rate range during reception.

Example: Frequency of base clock = 10 MHz = 10,000,000 Hz
Set value of MDL67 to MDL60 bits of BRGC6 register = 00100001B (k = 33)
Target baud rate = 153600 bps

Baud rate = 10 M / (2 × 33)
= 10000000 / (2 × 33) = 151,515 [bps]

Error = (151515/153600 − 1) × 100
= −1.357 [%]

(3) Example of setting baud rate

Table 15-5. Set Data of Baud Rate Generator

Baud Rate [bps]	f_{PRS} = 2.0 MHz				f_{PRS} = 5.0 MHz				f_{PRS} = 10.0 MHz				f_{PRS} = 20.0 MHz			
	TPS63-TPS60	k	Calculated Value	ERR [%]	TPS63-TPS60	k	Calculated Value	ERR [%]	TPS63-TPS60	k	Calculated Value	ERR [%]	TPS63-TPS60	k	Calculated Value	ERR [%]
300	8H	13	301	0.16	7H	65	301	0.16	8H	65	301	0.16	9H	65	301	0.16
600	7H	13	601	0.16	6H	65	601	0.16	7H	65	601	0.16	8H	65	601	0.16
1200	6H	13	1202	0.16	5H	65	1202	0.16	6H	65	1202	0.16	7H	65	1202	0.16
2400	5H	13	2404	0.16	4H	65	2404	0.16	5H	65	2404	0.16	6H	65	2404	0.16
4800	4H	13	4808	0.16	3H	65	4808	0.16	4H	65	4808	0.16	5H	65	4808	0.16
9600	3H	13	9615	0.16	2H	65	9615	0.16	3H	65	9615	0.16	4H	65	9615	0.16
19200	2H	13	19231	0.16	1H	65	19231	0.16	2H	65	19231	0.16	3H	65	19231	0.16
24000	1H	21	23810	−0.79	3H	13	24038	0.16	4H	13	24038	0.16	5H	13	24038	0.16
31250	1H	16	31250	0	4H	5	31250	0	5H	5	31250	0	6H	5	31250	0
38400	1H	13	38462	0.16	0H	65	38462	0.16	1H	65	38462	0.16	2H	65	38462	0.16
48000	0H	21	47619	−0.79	2H	13	48077	0.16	3H	13	48077	0.16	4H	13	48077	0.16
76800	0H	13	76923	0.16	0H	33	75758	−1.36	0H	65	76923	0.16	1H	65	76923	0.16
115200	0H	9	111111	−3.55	1H	11	113636	−1.36	0H	43	116279	0.94	0H	87	114943	−0.22
153600	−	−	−	−	1H	8	156250	1.73	0H	33	151515	−1.36	1H	33	151515	−1.36
312500	−	−	−	−	0H	8	312500	0	1H	8	312500	0	2H	8	312500	0
625000	−	−	−	−	0H	4	625000	0	1H	4	625000	0	2H	4	625000	0

Remark TPS63 to TPS60: Bits 3 to 0 of clock selection register 6 (CKSR6) (setting of base clock (f_{XCLK6}))
k: Value set by MDL67 to MDL60 bits of baud rate generator control register 6 (BRGC6) (k = 4, 5, 6, ..., 255)
f_{PRS}: Peripheral hardware clock frequency
ERR: Baud rate error

(4) Permissible baud rate range during reception

The permissible error from the baud rate at the transmission destination during reception is shown below.

Caution Make sure that the baud rate error during reception is within the permissible error range, by using the calculation expression shown below.

Figure 15-25. Permissible Baud Rate Range During Reception

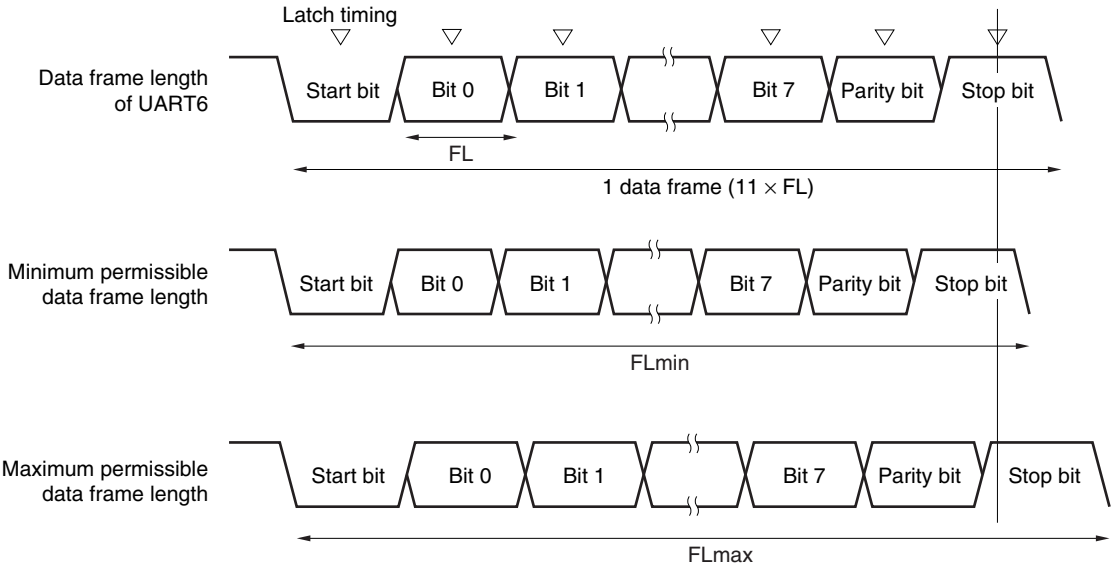

As shown in Figure 15-25, the latch timing of the receive data is determined by the counter set by baud rate generator control register 6 (BRGC6) after the start bit has been detected. If the last data (stop bit) meets this latch timing, the data can be correctly received.

Assuming that 11-bit data is received, the theoretical values can be calculated as follows.

$FL = (Brate)^{-1}$

Brate: Baud rate of UART6
k: Set value of BRGC6
FL: 1-bit data length
Margin of latch timing: 2 clocks

Minimum permissible data frame length: $FLmin = 11 \times FL - \frac{k-2}{2k} \times FL = \frac{21k+2}{2k} FL$

Therefore, the maximum receivable baud rate at the transmission destination is as follows.

$$BRmax = (FLmin/11)^{-1} = \frac{22k}{21k+2} Brate$$

Similarly, the maximum permissible data frame length can be calculated as follows.

$$\frac{10}{11} \times FLmax = 11 \times FL - \frac{k+2}{2 \times k} \times FL = \frac{21k-2}{2 \times k} FL$$

$$FLmax = \frac{21k-2}{20k} FL \times 11$$

Therefore, the minimum receivable baud rate at the transmission destination is as follows.

$$BRmin = (FLmax/11)^{-1} = \frac{20k}{21k-2} Brate$$

The permissible baud rate error between UART6 and the transmission destination can be calculated from the above minimum and maximum baud rate expressions, as follows.

Table 15-6. Maximum/Minimum Permissible Baud Rate Error

Division Ratio (k)	Maximum Permissible Baud Rate Error	Minimum Permissible Baud Rate Error
4	+2.33%	−2.44%
8	+3.53%	−3.61%
20	+4.26%	−4.31%
50	+4.56%	−4.58%
100	+4.66%	−4.67%
255	+4.72%	−4.73%

Remarks 1. The permissible error of reception depends on the number of bits in one frame, input clock frequency, and division ratio (k). The higher the input clock frequency and the higher the division ratio (k), the higher the permissible error.

2. k: Set value of BRGC6

(5) Data frame length during continuous transmission

When data is continuously transmitted, the data frame length from a stop bit to the next start bit is extended by two clocks of base clock from the normal value. However, the result of communication is not affected because the timing is initialized on the reception side when the start bit is detected.

Figure 15-26. Data Frame Length During Continuous Transmission

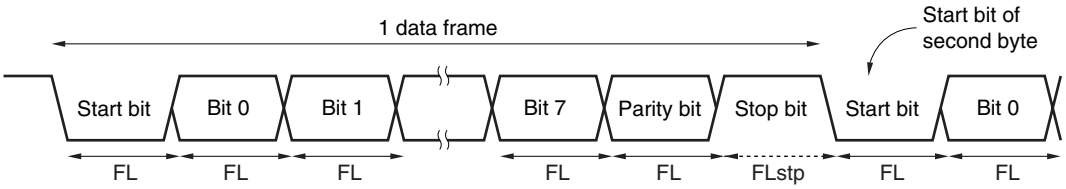

Where the 1-bit data length is FL, the stop bit length is FLstp, and base clock frequency is f_{XCLK6}, the following expression is satisfied.

$$FLstp = FL + 2/f_{XCLK6}$$

Therefore, the data frame length during continuous transmission is:

$$\text{Data frame length} = 11 \times FL + 2/f_{XCLK6}$$

CHAPTER 16 SERIAL INTERFACES CSI10 AND CSI11

	78K0/KB2	78K0/KC2	78K0/KD2	78K0/KE2		78K0/KF2
				Products whose flash memory is less than 32 KB	Products whose flash memory is at least 48 KB	
Serial interface CSI10	√					
Serial interface CSI11	–				√	

Remark √: Mounted, –: Not mounted

16.1 Functions of Serial Interfaces CSI10 and CSI11

Serial interfaces CSI10 and CSI11 have the following two modes.

(1) Operation stop mode

This mode is used when serial communication is not performed and can enable a reduction in the power consumption.

For details, see **16.4.1 Operation stop mode**.

(2) 3-wire serial I/O mode (MSB/LSB-first selectable)

This mode is used to communicate 8-bit data using three lines: a serial clock line ($\overline{\text{SCK1n}}$) and two serial data lines (SI1n and SO1n).

The processing time of data communication can be shortened in the 3-wire serial I/O mode because transmission and reception can be simultaneously executed.

In addition, whether 8-bit data is communicated with the MSB or LSB first can be specified, so this interface can be connected to any device.

The 3-wire serial I/O mode is used for connecting peripheral ICs and display controllers with a clocked serial interface.

For details, see **16.4.2 3-wire serial I/O mode**.

Remark n = 0: 78K0/KE2 products whose flash memory is less than 32 KB, and 78K0/KB2, 78K0/KC2, 78K0/KD2 products

n = 0, 1: 78K0/KE2 products whose flash memory is at least 48 KB, and 78K0/KF2 products

16.2 Configuration of Serial Interfaces CSI10 and CSI11

Serial interfaces CSI10 and CSI11 include the following hardware.

Table 16-1. Configuration of Serial Interfaces CSI10 and CSI11

Item	Configuration
Controller	Transmit controller Clock start/stop controller & clock phase controller
Registers	Transmit buffer register 1n (SOTB1n) Serial I/O shift register 1n (SIO1n)
Control registers	Serial operation mode register 1n (CSIM1n) Serial clock selection register 1n (CSIC1n) Port mode register 0 (PM0) or port mode register 1 (PM1) Port register 0 (P0) or port register 1 (P1)

Remark n = 0: 78K0/KE2 products whose flash memory is less than 32 KB, and 78K0/KB2, 78K0/KC2, 78K0/KD2 products

n = 0, 1: 78K0/KE2 products whose flash memory is at least 48 KB, and 78K0/KF2 products

Figure 16-1. Block Diagram of Serial Interface CSI10

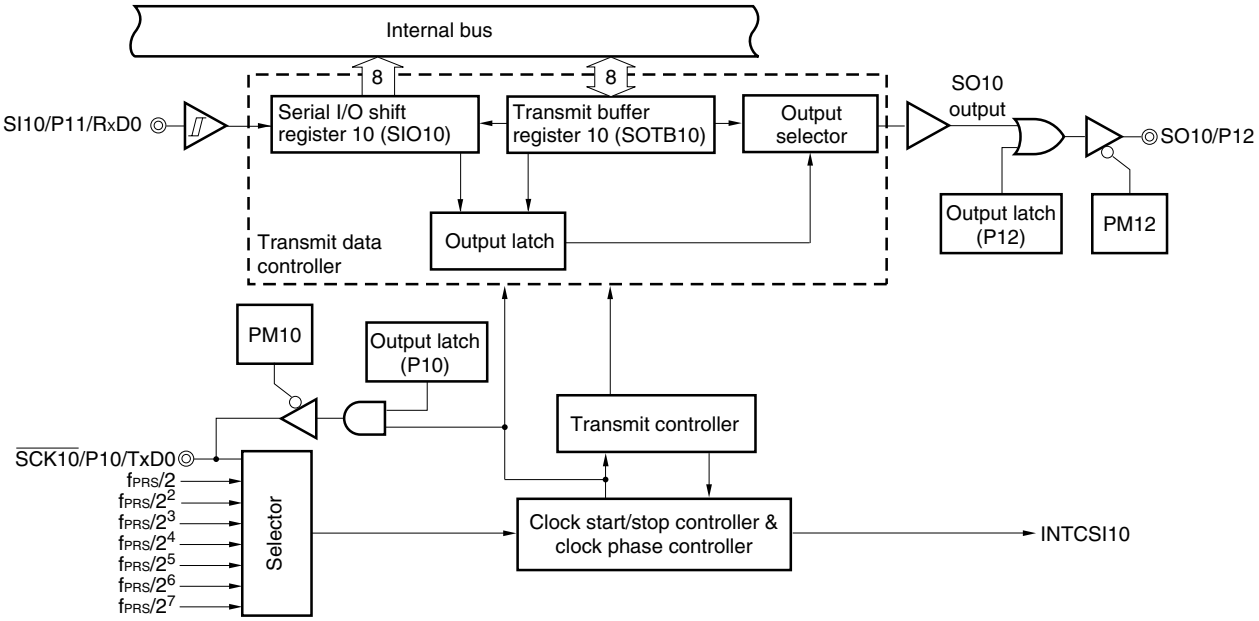

Figure 16-2. Block Diagram of Serial Interface CSI11

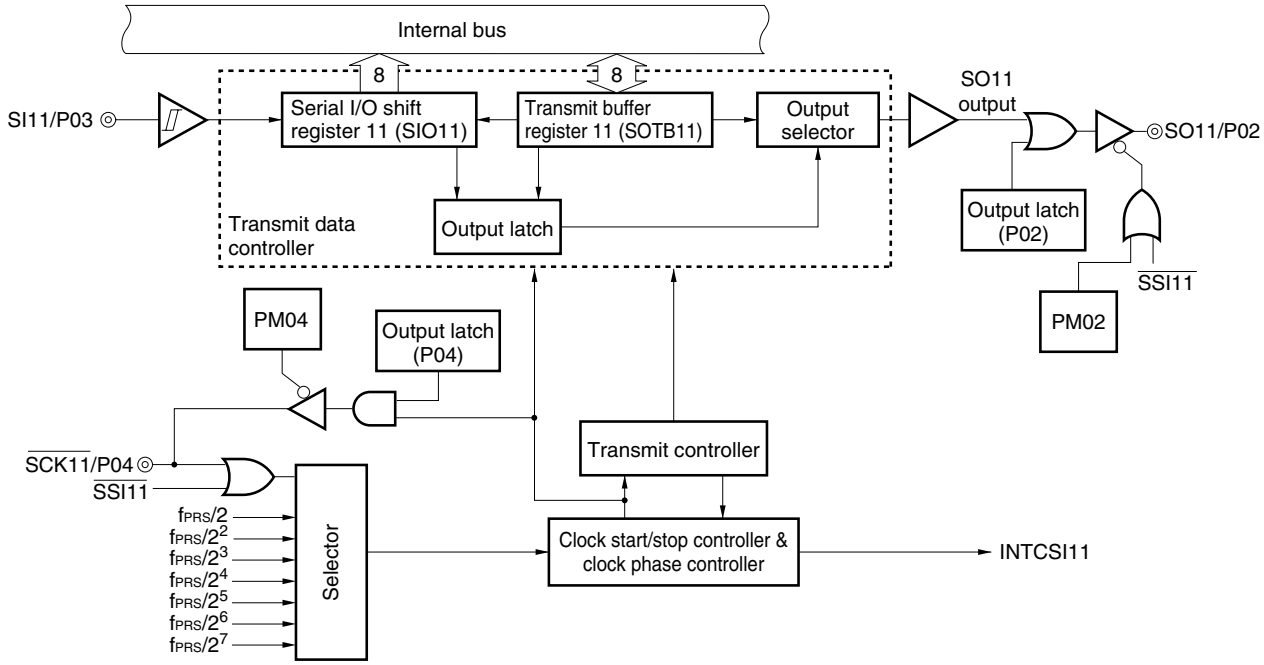

(1) Transmit buffer register 1n (SOTB1n)

This register sets the transmit data.

Transmission/reception is started by writing data to SOTB1n when bit 7 (CSIE1n) and bit 6 (TRMD1n) of serial operation mode register 1n (CSIM1n) is 1.

The data written to SOTB1n is converted from parallel data into serial data by serial I/O shift register 1n, and output to the serial output pin (SO1n).

SOTB1n can be written or read by an 8-bit memory manipulation instruction.

Reset signal generation clears this register to 00H.

Cautions 1. Do not access SOTB1n when CSOT1n = 1 (during serial communication).

2. In the slave mode, transmission/reception is started when data is written to SOTB11 with a low level input to the $\overline{\text{SSI11}}$ pin. For details on the transmission/reception operation, see 16.4.2 (2) Communication operation.

(2) Serial I/O shift register 1n (SIO1n)

This is an 8-bit register that converts data from parallel data into serial data and vice versa.

This register can be read by an 8-bit memory manipulation instruction.

Reception is started by reading data from SIO1n if bit 6 (TRMD1n) of serial operation mode register 1n (CSIM1n) is 0.

During reception, the data is read from the serial input pin (SI1n) to SIO1n.

Reset signal generation clears this register to 00H.

Cautions 1. Do not access SIO1n when CSOT1n = 1 (during serial communication).

2. In the slave mode, reception is started when data is read from SIO11 with a low level input to the $\overline{\text{SSI11}}$ pin. For details on the reception operation, see 16.4.2 (2) Communication operation.

Remark n = 0: 78K0/KE2 products whose flash memory is less than 32 KB, and 78K0/KB2, 78K0/KC2, 78K0/KD2 products

n = 0, 1: 78K0/KE2 products whose flash memory is at least 48 KB, and 78K0/KF2 products

16.3 Registers Controlling Serial Interfaces CSI10 and CSI11

Serial interfaces CSI10 and CSI11 are controlled by the following four registers.

- Serial operation mode register 1n (CSIM1n)
- Serial clock selection register 1n (CSIC1n)
- Port mode register 0 (PM0) or port mode register 1 (PM1)
- Port register 0 (P0) or port register 1 (P1)

(1) Serial operation mode register 1n (CSIM1n)

CSIM1n is used to select the operation mode and enable or disable operation.

CSIM1n can be set by a 1-bit or 8-bit memory manipulation instruction.

Reset signal generation clears this register to 00H.

Remark n = 0: 78K0/KE2 products whose flash memory is less than 32 KB, and 78K0/KB2, 78K0/KC2, 78K0/KD2 products

n = 0, 1: 78K0/KE2 products whose flash memory is at least 48 KB, and 78K0/KF2 products

Figure 16-3. Format of Serial Operation Mode Register 10 (CSIM10)

Address: FF80H After reset: 00H R/W[Note 1]

Symbol	<7>	6	5	4	3	2	1	0
CSIM10	CSIE10	TRMD10	0	DIR10	0	0	0	CSOT10

CSIE10	Operation control in 3-wire serial I/O mode
0	Disables operation[Note 2] and asynchronously resets the internal circuit[Note 3].
1	Enables operation

TRMD10[Note 4]	Transmit/receive mode control
0[Note 5]	Receive mode (transmission disabled).
1	Transmit/receive mode

DIR10[Note 6]	First bit specification
0	MSB
1	LSB

CSOT10	Communication status flag
0	Communication is stopped.
1	Communication is in progress.

Notes 1. Bit 0 is a read-only bit.

2. To use P10/$\overline{\text{SCK10}}$/TxD0 and P12/SO10 as general-purpose ports, set CSIM10 in the default status (00H).

3. Bit 0 (CSOT10) of CSIM10 and serial I/O shift register 10 (SIO10) are reset.

4. Do not rewrite TRMD10 when CSOT10 = 1 (during serial communication).

5. The SO10 output (see **Figure 16-1**) is fixed to the low level when TRMD10 is 0. Reception is started when data is read from SIO10.

6. Do not rewrite DIR10 when CSOT10 = 1 (during serial communication).

Caution Be sure to clear bit 5 to 0.

Figure 16-4. Format of Serial Operation Mode Register 11 (CSIM11)

Address: FF88H After reset: 00H R/W[Note 1]

Symbol	<7>	6	5	4	3	2	1	0
CSIM11	CSIE11	TRMD11	SSE11	DIR11	0	0	0	CSOT11

CSIE11	Operation control in 3-wire serial I/O mode
0	Disables operation[Note 2] and asynchronously resets the internal circuit[Note 3].
1	Enables operation

TRMD11[Note 4]	Transmit/receive mode control
0[Note 5]	Receive mode (transmission disabled).
1	Transmit/receive mode

SSE11[Notes 6, 7]	$\overline{\text{SSI11}}$ pin use selection
0	$\overline{\text{SSI11}}$ pin is not used
1	$\overline{\text{SSI11}}$ pin is used

DIR11[Note 8]	First bit specification
0	MSB
1	LSB

CSOT11	Communication status flag
0	Communication is stopped.
1	Communication is in progress.

Notes 1. Bit 0 is a read-only bit.

2. To use P02/SO11, P04/$\overline{\text{SCK11}}$, and P05/$\overline{\text{SSI11}}$/TI001 as general-purpose ports, set CSIM11 in the default status (00H).

3. Bit 0 (CSOT11) of CSIM11 and serial I/O shift register 11 (SIO11) are reset.

4. Do not rewrite TRMD11 when CSOT11 = 1 (during serial communication).

5. The SO11 output (see **Figure 16-2**) is fixed to the low level when TRMD11 is 0. Reception is started when data is read from SIO11.

6. Do not rewrite SSE11 when CSOT11 = 1 (during serial communication).

7. Before setting this bit to 1, fix the $\overline{\text{SSI11}}$ pin input level to 0 or 1.

8. Do not rewrite DIR11 when CSOT11 = 1 (during serial communication).

(2) Serial clock selection register 1n (CSIC1n)

This register specifies the timing of the data transmission/reception and sets the serial clock.

CSIC1n can be set by a 1-bit or 8-bit memory manipulation instruction.

Reset signal generation clears this register to 00H.

Remark n = 0: 78K0/KE2 products whose flash memory is less than 32 KB, and 78K0/KB2, 78K0/KC2, 78K0/KD2 products

n = 0, 1: 78K0/KE2 products whose flash memory is at least 48 KB, and 78K0/KF2 products

Figure 16-5. Format of Serial Clock Selection Register 10 (CSIC10)

Address: FF81H After reset: 00H R/W

Symbol	7	6	5	4	3	2	1	0
CSIC10	0	0	0	CKP10	DAP10	CKS102	CKS101	CKS100

CKP10	DAP10	Specification of data transmission/reception timing	Type
0	0	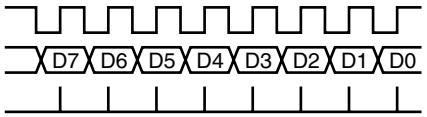	1
0	1	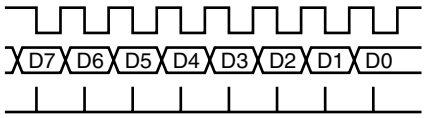	2
1	0	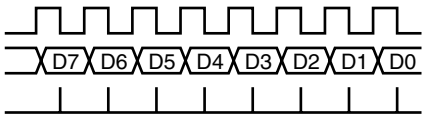	3
1	1	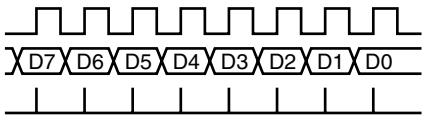	4

CKS102	CKS101	CKS100	CSI10 serial clock selection[Notes 1, 2]				Mode
				f_{PRS} = 2 MHz	f_{PRS} = 5 MHz	f_{PRS} = 10 MHz	f_{PRS} = 20 MHz	
0	0	0	$f_{PRS}/2$	1 MHz	2.5 MHz	5 MHz	Setting prohibited	Master mode
0	0	1	$f_{PRS}/2^2$	500 kHz	1.25 MHz	2.5 MHz	5 MHz	
0	1	0	$f_{PRS}/2^3$	250 kHz	625 kHz	1.25 MHz	2.5 MHz	
0	1	1	$f_{PRS}/2^4$	125 kHz	312.5 kHz	625 kHz	1.25 MHz	
1	0	0	$f_{PRS}/2^5$	62.5 kHz	156.25 kHz	312.5 kHz	625 kHz	
1	0	1	$f_{PRS}/2^6$	31.25 kHz	78.13 kHz	156.25 kHz	312.5 kHz	
1	1	0	$f_{PRS}/2^7$	15.63 kHz	39.06 kHz	78.13 kHz	156.25 kHz	
1	1	1	External clock input from $\overline{SCK10}$[Note 3]					Slave mode

Notes 1. The frequency that can be used for the peripheral hardware clock (f_{PRS}) differs depending on the power supply voltage and product specifications.

Supply Voltage	Conventional-specification Products (μPD78F05xx and 78F05xxD)	Expanded-specification Products (μPD78F05xxA and 78F05xxDA)
4.0 V ≤ V_{DD} ≤ 5.5 V	f_{PRS} ≤ 20 MHz	f_{PRS} ≤ 20 MHz
2.7 V ≤ V_{DD} < 4.0 V	f_{PRS} ≤ 10 MHz	
1.8 V ≤ V_{DD} < 2.7 V (Standard products and (A) grade products only)	f_{PRS} ≤ 5 MHz	f_{PRS} ≤ 5 MHz

(The values shown in the table above are those when $f_{PRS} = f_{XH}$ (XSEL = 1).)

2. Set the serial clock to satisfy the following conditions.

Supply Voltage	Conventional-specification Products (μPD78F05xx and 78F05xxD) and Expanded-specification Products (μPD78F05xxA and 78F05xxDA)		
	Standard Products	(A) Grade Products	(A2) Grade Products
4.0 V ≤ V_{DD} ≤ 5.5 V	Serial clock ≤ 6.25 MHz	Serial clock ≤ 5 MHz	Serial clock ≤ 5 MHz
2.7 V ≤ V_{DD} < 4.0 V	Serial clock ≤ 4 MHz	Serial clock ≤ 2.5 MHz	Serial clock ≤ 2.5 MHz
1.8 V ≤ V_{DD} < 2.7 V	Serial clock ≤ 2 MHz	Serial clock ≤ 1.66 MHz	–

3. Do not start communication with the external clock from the $\overline{SCK10}$ pin when the internal high-speed oscillation clock and high-speed system clock are stopped while the CPU operates with the subsystem clock, or when in the STOP mode.

Cautions 1. Do not write to CSIC10 while CSIE10 = 1 (operation enabled).

2. To use P10/$\overline{SCK10}$/TxD0 and P12/SO10 as general-purpose ports, set CSIC10 in the default status (00H).

3. The phase type of the data clock is type 1 after reset.

Remark f_{PRS}: Peripheral hardware clock frequency

Figure 16-6. Format of Serial Clock Selection Register 11 (CSIC11)

Address: FF89H After reset: 00H R/W

Symbol	7	6	5	4	3	2	1	0
CSIC11	0	0	0	CKP11	DAP11	CKS112	CKS111	CKS110

CKP11	DAP11	Specification of data transmission/reception timing	Type
0	0	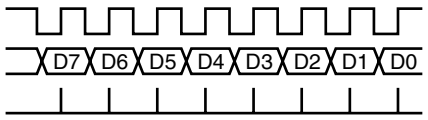	1
0	1	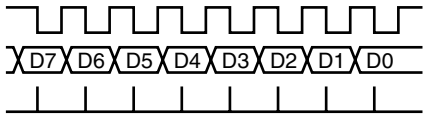	2
1	0	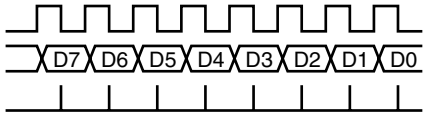	3
1	1	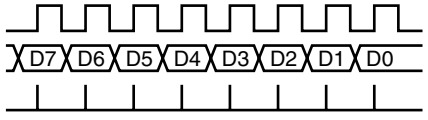	4

CKS112	CKS111	CKS110	CSI11 serial clock selection[Notes 1, 2]				Mode
				f_{PRS} = 2 MHz	f_{PRS} = 5 MHz	f_{PRS} = 10 MHz	f_{PRS} = 20 MHz	
0	0	0	$f_{PRS}/2$	1 MHz	2.5 MHz	5 MHz	Setting prohibited	Master mode
0	0	1	$f_{PRS}/2^2$	500 kHz	1.25 MHz	2.5 MHz	5 MHz	
0	1	0	$f_{PRS}/2^3$	250 kHz	625 kHz	1.25 MHz	2.5 MHz	
0	1	1	$f_{PRS}/2^4$	125 kHz	312.5 kHz	625 kHz	1.25 MHz	
1	0	0	$f_{PRS}/2^5$	62.5 kHz	156.25 kHz	312.5 kHz	625 kHz	
1	0	1	$f_{PRS}/2^6$	31.25 kHz	78.13 kHz	156.25 kHz	312.5 kHz	
1	1	0	$f_{PRS}/2^7$	15.63 kHz	39.06 kHz	78.13 kHz	156.25 kHz	
1	1	1	External clock input from $\overline{SCK11}$[Note 3]					Slave mode

Note 1. The frequency that can be used for the peripheral hardware clock (f_{PRS}) differs depending on the power supply voltage and product specifications.

Supply Voltage	Conventional-specification Products (μPD78F05xx and 78F05xxD)	Expanded-specification Products (μPD78F05xxA and 78F05xxDA)
4.0 V ≤ V_{DD} ≤ 5.5 V	f_{PRS} ≤ 20 MHz	f_{PRS} ≤ 20 MHz
2.7 V ≤ V_{DD} < 4.0 V	f_{PRS} ≤ 10 MHz	
1.8 V ≤ V_{DD} < 2.7 V (Standard products and (A) grade products only)	f_{PRS} ≤ 5 MHz	f_{PRS} ≤ 5 MHz

(The values shown in the table above are those when $f_{PRS} = f_{XH}$ (XSEL = 1).)

Notes 2. Set the serial clock to satisfy the following conditions.

Supply Voltage	Conventional-specification Products (μPD78F05xx and 78F05xxD) and Expanded-specification Products (μPD78F05xxA and 78F05xxDA)		
	Standard Products	(A) Grade Products	(A2) Grade Products
4.0 V ≤ V_{DD} ≤ 5.5 V	Serial clock ≤ 6.25 MHz	Serial clock ≤ 5 MHz	Serial clock ≤ 5 MHz
2.7 V ≤ V_{DD} < 4.0 V	Serial clock ≤ 4 MHz	Serial clock ≤ 2.5 MHz	Serial clock ≤ 2.5 MHz
1.8 V ≤ V_{DD} < 2.7 V	Serial clock ≤ 2 MHz	Serial clock ≤ 1.66 MHz	–

3. Do not start communication with the external clock from the $\overline{SCK11}$ pin when the internal high-speed oscillation clock and high-speed system clock are stopped while the CPU operates with the subsystem clock, or when in the STOP mode.

Cautions 1. Do not write to CSIC11 while CSIE11 = 1 (operation enabled).

2. To use P02/SO11 and P04/$\overline{SCK11}$ as general-purpose ports, set CSIC11 in the default status (00H).

3. The phase type of the data clock is type 1 after reset.

Remark f_{PRS}: Peripheral hardware clock frequency

(3) Port mode registers 0 and 1 (PM0, PM1)

These registers set port 0 and 1 input/output in 1-bit units.

When using P10/$\overline{SCK10}$ and P04/$\overline{SCK11}$ as the clock output pins of the serial interface, clear PM10 and PM04 to 0, and set the output latches of P10 and P04 to 1.

When using P12/SO10 and P02/SO11 as the data output pins of the serial interface, clear PM12, PM02, and the output latches of P12 and P02 to 0.

When using P10/$\overline{SCK10}$ and P04/$\overline{SCK11}$ as the clock input pins of the serial interface, P11/SI10/RxD0 and P03/SI11 as the data input pins, and P05/$\overline{SSI11}$/TI001 as the chip select input pin, set PM10, PM04, PM11, PM03, and PM05 to 1. At this time, the output latches of P10, P04, P11, P03, and P05 may be 0 or 1.

PM0 and PM1 can be set by a 1-bit or 8-bit memory manipulation instruction.

Reset signal generation sets these registers to FFH.

Figure 16-7. Format of Port Mode Register 0 (PM0)

Address: FF20H After reset: FFH R/W

Symbol	7	6	5	4	3	2	1	0
PM0	1	PM06	PM05	PM04	PM03	PM02	PM01	PM00

PM0n	P0n pin I/O mode selection (n = 0 to 6)
0	Output mode (output buffer on)
1	Input mode (output buffer off)

Remark The figure shown above presents the format of port mode register 0 of 78K0/KF2 products. For the format of port mode register 0 of other products, see **(1) Port mode registers (PMxx)** in **5.3 Registers Controlling Port Function**.

Figure 16-8. Format of Port Mode Register 1 (PM1)

Address: FF21H After reset: FFH R/W

Symbol	7	6	5	4	3	2	1	0
PM1	PM17	PM16	PM15	PM14	PM13	PM12	PM11	PM10

PM1n	P1n pin I/O mode selection (n = 0 to 7)
0	Output mode (output buffer on)
1	Input mode (output buffer off)

16.4 Operation of Serial Interfaces CSI10 and CSI11

Serial interfaces CSI10 and CSI11 can be used in the following two modes.

- Operation stop mode
- 3-wire serial I/O mode

16.4.1 Operation stop mode

Serial communication is not executed in this mode. Therefore, the power consumption can be reduced. In addition, the P10/$\overline{\text{SCK10}}$/TxD0, P11/SI10/RxD0, P12/SO10, P02/SO11, P03/SI11, and P04/$\overline{\text{SCK11}}$ pins can be used as ordinary I/O port pins in this mode.

(1) Register used

The operation stop mode is set by serial operation mode register 1n (CSIM1n).

To set the operation stop mode, clear bit 7 (CSIE1n) of CSIM1n to 0.

(a) Serial operation mode register 1n (CSIM1n)

CSIM1n can be set by a 1-bit or 8-bit memory manipulation instruction.

Reset signal generation clears CSIM1n to 00H.

Remark n = 0: 78K0/KE2 products whose flash memory is less than 32 KB, and 78K0/KB2, 78K0/KC2, 78K0/KD2 products

n = 0, 1: 78K0/KE2 products whose flash memory is at least 48 KB, and 78K0/KF2 products

- Serial operation mode register 10 (CSIM10)

Address: FF80H After reset: 00H R/W

Symbol	<7>	6	5	4	3	2	1	0
CSIM10	CSIE10	TRMD10	0	DIR10	0	0	0	CSOT10

CSIE10	Operation control in 3-wire serial I/O mode
0	Disables operation[Note 1] and asynchronously resets the internal circuit[Note 2].

Notes 1. To use P10/$\overline{\text{SCK10}}$/TxD0 and P12/SO10 as general-purpose ports, set CSIM10 in the default status (00H).

2. Bit 0 (CSOT10) of CSIM10 and serial I/O shift register 10 (SIO10) are reset.

- Serial operation mode register 11 (CSIM11)

Address: FF88H After reset: 00H R/W

Symbol	<7>	6	5	4	3	2	1	0
CSIM11	CSIE11	TRMD11	SSE11	DIR11	0	0	0	CSOT11

CSIE11	Operation control in 3-wire serial I/O mode
0	Disables operation[Note 1] and asynchronously resets the internal circuit[Note 2].

Notes 1. To use P02/SO11, P04/$\overline{\text{SCK11}}$, and P05/$\overline{\text{SSI11}}$/TI001 as general-purpose ports, set CSIM11 in the default status (00H).

2. Bit 0 (CSOT11) of CSIM11 and serial I/O shift register 11 (SIO11) are reset.

16.4.2 3-wire serial I/O mode

The 3-wire serial I/O mode is used for connecting peripheral ICs and display controllers with a clocked serial interface.

In this mode, communication is executed by using three lines: the serial clock ($\overline{\text{SCK1n}}$), serial output (SO1n), and serial input (SI1n) lines.

(1) Registers used

- Serial operation mode register 1n (CSIM1n)
- Serial clock selection register 1n (CSIC1n)
- Port mode register 0 (PM0) or port mode register 1 (PM1)
- Port register 0 (P0) or port register 1 (P1)

The basic procedure of setting an operation in the 3-wire serial I/O mode is as follows.

<1> Set the CSIC1n register (see **Figures 16-5** and **16-6**).

<2> Set bits 4 to 6 (DIR1n, SSE11 (serial interface CSI11 only), and TRMD1n) of the CSIM1n register (see **Figures 16-3** and **16-4**).

<3> Set bit 7 (CSIE1n) of the CSIM1n register to 1. → Transmission/reception is enabled.

<4> Write data to transmit buffer register 1n (SOTB1n). → Data transmission/reception is started.
Read data from serial I/O shift register 1n (SIO1n). → Data reception is started.

Caution Take relationship with the other party of communication when setting the port mode register and port register.

Remark n = 0: 78K0/KE2 products whose flash memory is less than 32 KB, and 78K0/KB2, 78K0/KC2, 78K0/KD2 products

n = 0, 1: 78K0/KE2 products whose flash memory is at least 48 KB, and 78K0/KF2 products

The relationship between the register settings and pins is shown below.

Table 16-2. Relationship Between Register Settings and Pins (1/2)

(a) Serial interface CSI10

CSIE10	TRMD10	PM11	P11	PM12	P12	PM10	P10	CSI10 Operation	Pin Function		
									SI10/RxD0/P11	SO10/P12	$\overline{\text{SCK10}}$/TxD0/P10
0	0	×Note 1	×Note 1	×Note 1	×Note 1	×Note 1	×Note 1	Stop	RxD0/P11	P12Note 2	TxD0/P10Note 3
1	0	1	×	×Note 1	×Note 1	1	×	Slave receptionNote 4	SI10	P12Note 2	$\overline{\text{SCK10}}$ (input)Note 4
1	1	×Note 1	×Note 1	0	0	1	×	Slave transmissionNote 4	RxD0/P11	SO10	$\overline{\text{SCK10}}$ (input)Note 4
1	1	1	×	0	0	1	×	Slave transmission/ receptionNote 4	SI10	SO10	$\overline{\text{SCK10}}$ (input)Note 4
1	0	1	×	×Note 1	×Note 1	0	1	Master reception	SI10	P12Note 2	$\overline{\text{SCK10}}$ (output)
1	1	×Note 1	×Note 1	0	0	0	1	Master transmission	RxD0/P11	SO10	$\overline{\text{SCK10}}$ (output)
1	1	1	×	0	0	0	1	Master transmission/ reception	SI10	SO10	$\overline{\text{SCK10}}$ (output)

Notes 1. Can be set as port function.

2. To use P12/SO10 as general-purpose port, set the serial clock selection register 10 (CSIC10) in the default status (00H).

3. To use P10/$\overline{\text{SCK10}}$/TxD0 as port pins, clear CKP10 to 0.

4. To use the slave mode, set CKS102, CKS101, and CKS100 to 1, 1, 1.

Remark ×: don't care
CSIE10: Bit 7 of serial operation mode register 10 (CSIM10)
TRMD10: Bit 6 of CSIM10
CKP10: Bit 4 of serial clock selection register 10 (CSIC10)
CKS102, CKS101, CKS100: Bits 2 to 0 of CSIC10
PM1×: Port mode register
P1×: Port output latch

Table 16-2. Relationship Between Register Settings and Pins (2/2)

(b) Serial interface CSI11

CSIE11	TRMD11	SSE11	PM03	P03	PM02	P02	PM04	P04	PM05	P05	CSI11 Operation	Pin Function			
												SI11/ P03	SO11/ P02	$\overline{\text{SCK11}}$/ P04	$\overline{\text{SSI11}}$/ TI001/P05
0	0	×	×Note 1	×Note 1	×Note 1	×Note 1	×Note 1	×Note 1	×Note 1	×Note 1	Stop	P03	P02Note 2	P04Note 3	TI001/ P05
1	0	0	1	×	×Note 1	×Note 1	1	×	×Note 1	×Note 1	Slave reception Note 4	SI11	P02Note 2	$\overline{\text{SCK11}}$ (input) Note 4	TI001/ P05
		1							1	×					$\overline{\text{SSI11}}$
1	1	0	×Note 1	×Note 1	0	0	1	×	×Note 1	×Note 1	Slave transmission Note 4	P03	SO11	$\overline{\text{SCK11}}$ (input) Note 4	TI001/ P05
		1							1	×					$\overline{\text{SSI11}}$
1	1	0	1	×	0	0	1	×	×Note 1	×Note 1	Slave transmission/ reception Note 4	SI11	SO11	$\overline{\text{SCK11}}$ (input) Note 4	TI001/ P05
		1							1	×					$\overline{\text{SSI11}}$
1	0	0	1	×	×Note 1	×Note 1	0	1	×Note 1	×Note 1	Master reception	SI11	P02Note 2	$\overline{\text{SCK11}}$ (output)	TI001/ P05
1	1	0	×Note 1	×Note 1	0	0	0	1	×Note 1	×Note 1	Master transmission	P03	SO11	$\overline{\text{SCK11}}$ (output)	TI001/ P05
1	1	0	1	×	0	0	0	1	×Note 1	×Note 1	Master transmission/ reception	SI11	SO11	$\overline{\text{SCK11}}$ (output)	TI001/ P05

Notes 1. Can be set as port function.

2. To use P02/SO11 as general-purpose port, set the serial clock selection register 11 (CSIC11) in the default status (00H).

3 To use P04/$\overline{\text{SCK11}}$ as port pins, clear CKP11 to 0.

4 To use the slave mode, set CKS112, CKS111, and CKS110 to 1, 1, 1.

Remark ×: don't care

CSIE11: Bit 7 of serial operation mode register 11 (CSIM11)

TRMD11: Bit 6 of CSIM11

CKP11: Bit 4 of serial clock selection register 11 (CSIC11)

CKS112, CKS111, CKS110: Bits 2 to 0 of CSIC11

PM0×: Port mode register

P0×: Port output latch

(2) Communication operation

In the 3-wire serial I/O mode, data is transmitted or received in 8-bit units. Each bit of the data is transmitted or received in synchronization with the serial clock.

Data can be transmitted or received if bit 6 (TRMD1n) of serial operation mode register 1n (CSIM1n) is 1. Transmission/reception is started when a value is written to transmit buffer register 1n (SOTB1n). In addition, data can be received when bit 6 (TRMD1n) of serial operation mode register 1n (CSIM1n) is 0.

Reception is started when data is read from serial I/O shift register 1n (SIO1n).

However, communication is performed as follows if bit 5 (SSE11) of CSIM11 is 1 when serial interface CSI11 is in the slave mode.

<1> Low level input to the $\overline{\text{SSI11}}$ pin
→ Transmission/reception is started when SOTB11 is written, or reception is started when SIO11 is read.

<2> High level input to the $\overline{\text{SSI11}}$ pin
→ Transmission/reception or reception is held, therefore, even if SOTB11 is written or SIO11 is read, transmission/reception or reception will not be started.

<3> Data is written to SOTB11 or data is read from SIO11 while a high level is input to the $\overline{\text{SSI11}}$ pin, then a low level is input to the $\overline{\text{SSI11}}$ pin
→ Transmission/reception or reception is started.

<4> A high level is input to the $\overline{\text{SSI11}}$ pin during transmission/reception or reception
→ Transmission/reception or reception is suspended.

After communication has been started, bit 0 (CSOT1n) of CSIM1n is set to 1. When communication of 8-bit data has been completed, a communication completion interrupt request flag (CSIIF1n) is set, and CSOT1n is cleared to 0. Then the next communication is enabled.

Cautions 1. Do not access the control register and data register when CSOT1n = 1 (during serial communication).

2. When using serial interface CSI11, wait for the duration of at least one clock before the clock operation is started to change the level of the $\overline{\text{SSI11}}$ pin in the slave mode; otherwise, malfunctioning may occur.

Remark n = 0: 78K0/KE2 products whose flash memory is less than 32 KB, and 78K0/KB2, 78K0/KC2, 78K0/KD2 products

n = 0, 1: 78K0/KE2 products whose flash memory is at least 48 KB, and 78K0/KF2 products

Figure 16-9. Timing in 3-Wire Serial I/O Mode (1/2)

(a) Transmission/reception timing (Type 1: TRMD1n = 1, DIR1n = 0, CKP1n = 0, DAP1n = 0, SSE11 = 1[Note])

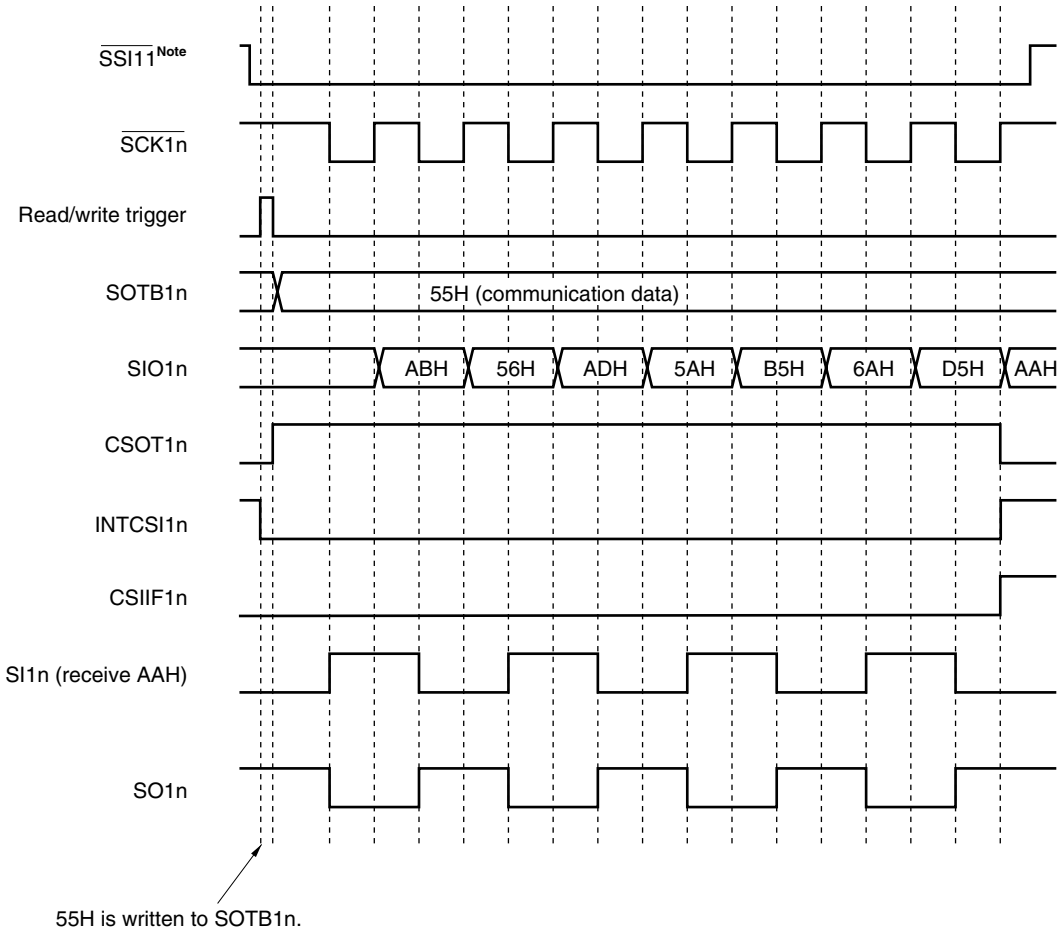

Note The SSE11 flag and $\overline{SSI11}$ pin are available only for serial interface CSI11, and are used in the slave mode.

Remark n = 0: 78K0/KE2 products whose flash memory is less than 32 KB, and 78K0/KB2, 78K0/KC2, 78K0/KD2 products

n = 0, 1: 78K0/KE2 products whose flash memory is at least 48 KB, and 78K0/KF2 products

Figure 16-9. Timing in 3-Wire Serial I/O Mode (2/2)

(b) Transmission/reception timing (Type 2: TRMD1n = 1, DIR1n = 0, CKP1n = 0, DAP1n = 1, SSE11 = 1[Note])

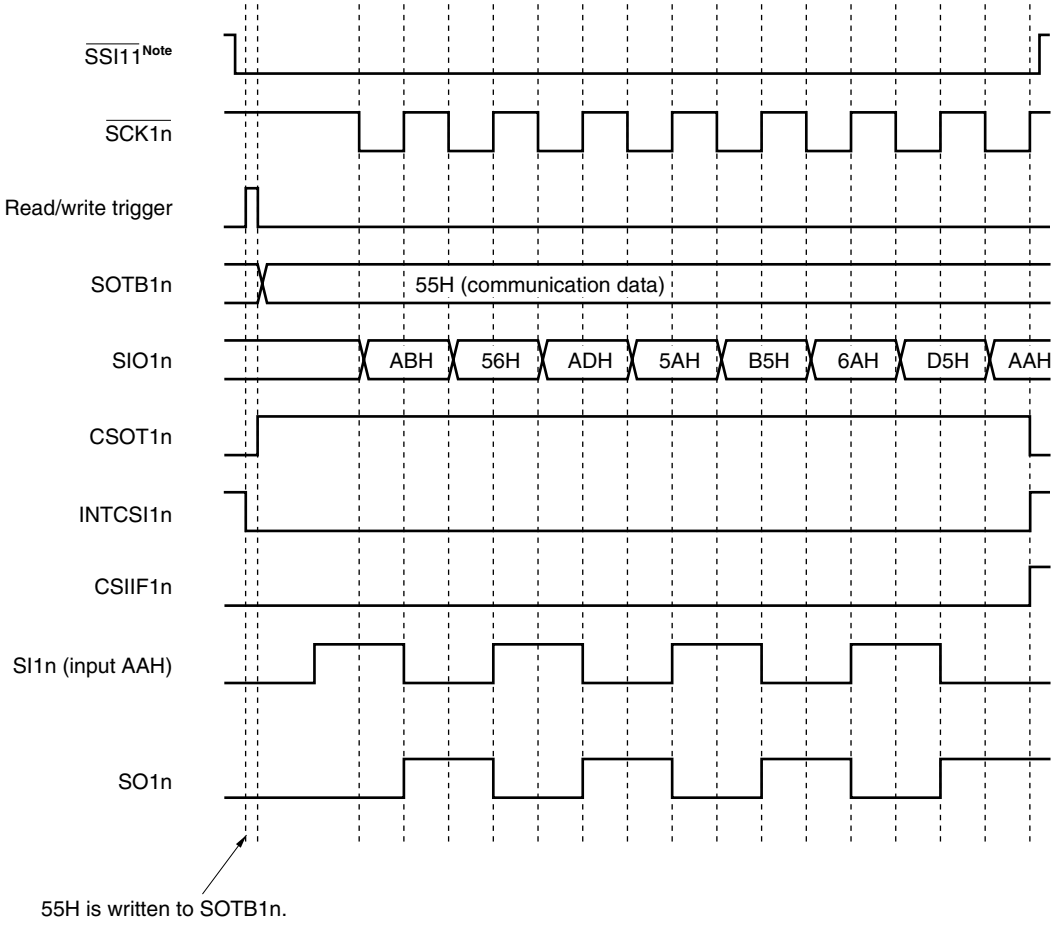

Note The SSE11 flag and $\overline{\text{SSI11}}$ pin are available only for serial interface CSI11, and are used in the slave mode.

Remark n = 0: 78K0/KE2 products whose flash memory is less than 32 KB, and 78K0/KB2, 78K0/KC2, 78K0/KD2 products

n = 0, 1: 78K0/KE2 products whose flash memory is at least 48 KB, and 78K0/KF2 products

Figure 16-10. Timing of Clock/Data Phase

(a) Type 1: CKP1n = 0, DAP1n = 0, DIR1n = 0

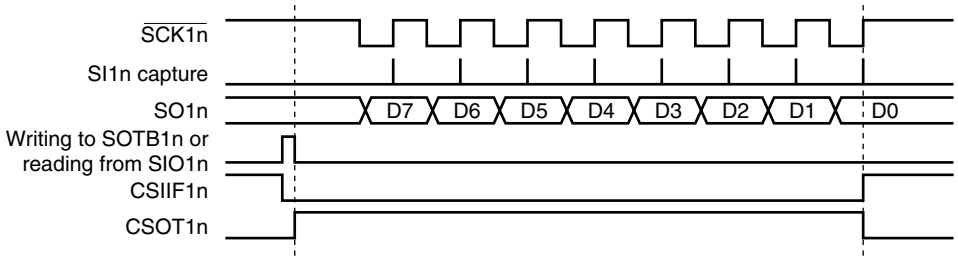

(b) Type 2: CKP1n = 0, DAP1n = 1, DIR1n = 0

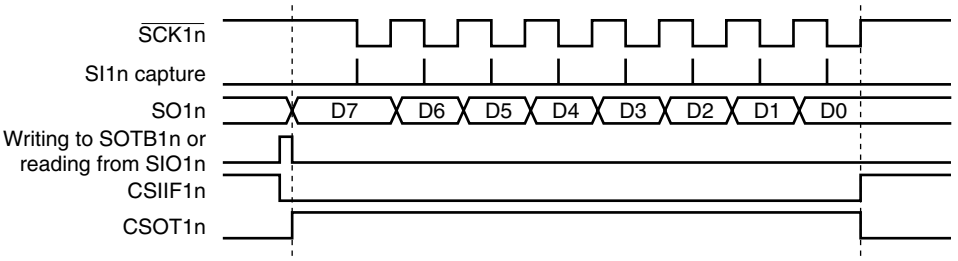

(c) Type 3: CKP1n = 1, DAP1n = 0, DIR1n = 0

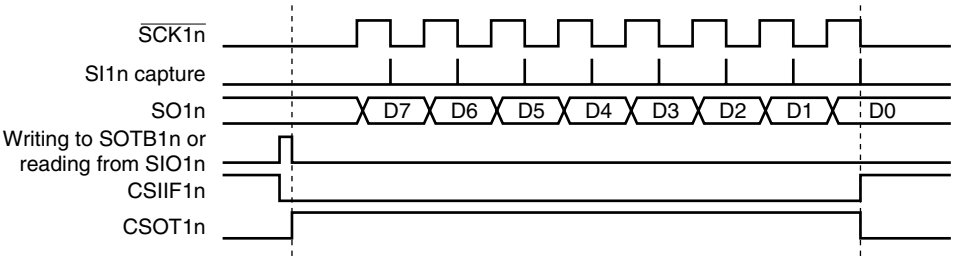

(d) Type 4: CKP1n = 1, DAP1n = 1, DIR1n = 0

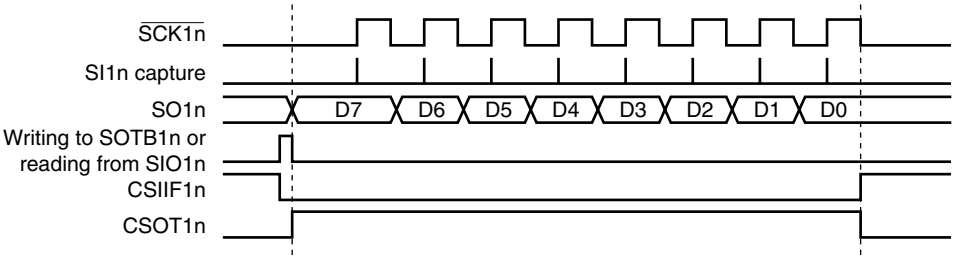

Remarks 1. n = 0: 78K0/KE2 products whose flash memory is less than 32 KB, and 78K0/KB2, 78K0/KC2, 78K0/KD2 products

n = 0, 1: 78K0/KE2 products whose flash memory is at least 48 KB, and 78K0/KF2 products

2. The above figure illustrates a communication operation where data is transmitted with the MSB first.

(3) Timing of output to SO1n pin (first bit)

When communication is started, the value of transmit buffer register 1n (SOTB1n) is output from the SO1n pin. The output operation of the first bit at this time is described below.

Figure 16-11. Output Operation of First Bit (1/2)

(a) Type 1: CKP1n = 0, DAP1n = 0

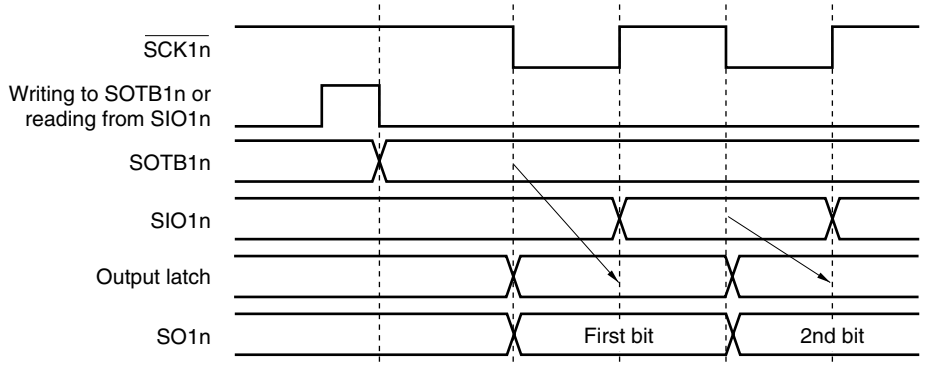

(b) Type 3: CKP1n = 1, DAP1n = 0

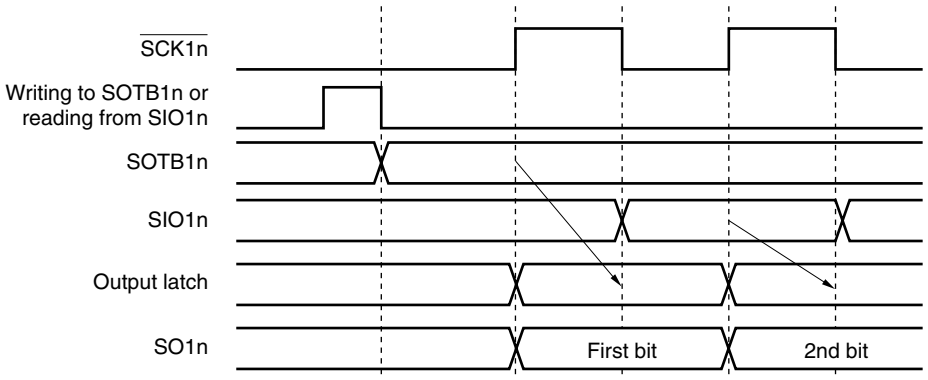

The first bit is directly latched by the SOTB1n register to the output latch at the falling (or rising) edge of $\overline{SCK1n}$, and output from the SO1n pin via an output selector. Then, the value of the SOTB1n register is transferred to the SIO1n register at the next rising (or falling) edge of $\overline{SCK1n}$, and shifted one bit. At the same time, the first bit of the receive data is stored in the SIO1n register via the SI1n pin.

The second and subsequent bits are latched by the SIO1n register to the output latch at the next falling (or rising) edge of $\overline{SCK1n}$, and the data is output from the SO1n pin.

Remark n = 0: 78K0/KE2 products whose flash memory is less than 32 KB, and 78K0/KB2, 78K0/KC2, 78K0/KD2 products

n = 0, 1: 78K0/KE2 products whose flash memory is at least 48 KB, and 78K0/KF2 products

Figure 16-11. Output Operation of First Bit (2/2)

(c) Type 2: CKP1n = 0, DAP1n = 1

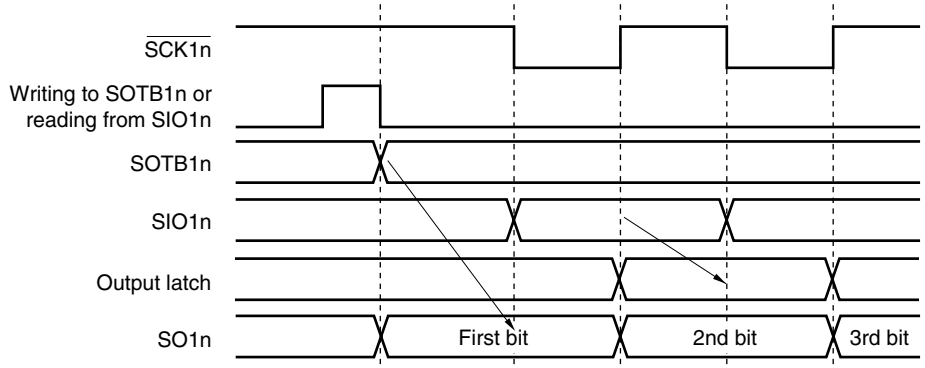

(d) Type 4: CKP1n = 1, DAP1n = 1

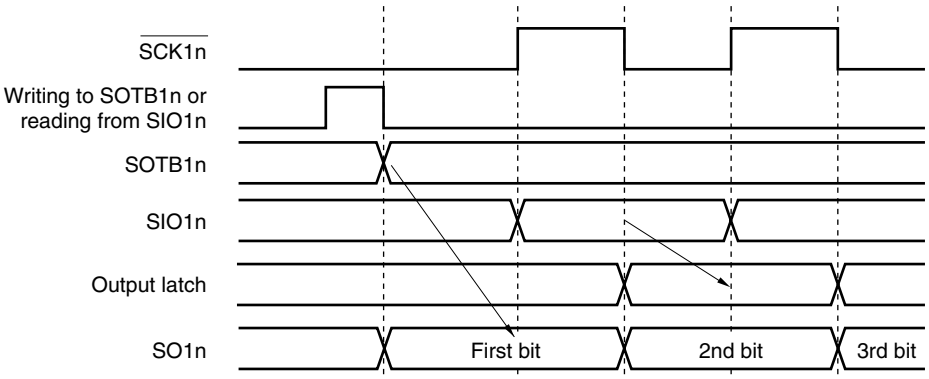

The first bit is directly latched by the SOTB1n register at the falling edge of the write signal of the SOTB1n register or the read signal of the SIO1n register, and output from the SO1n pin via an output selector. Then, the value of the SOTB1n register is transferred to the SIO1n register at the next falling (or rising) edge of $\overline{\text{SCK1n}}$, and shifted one bit. At the same time, the first bit of the receive data is stored in the SIO1n register via the SI1n pin.

The second and subsequent bits are latched by the SIO1n register to the output latch at the next rising (or falling) edge of $\overline{\text{SCK1n}}$, and the data is output from the SO1n pin.

Remark n = 0: 78K0/KE2 products whose flash memory is less than 32 KB, and 78K0/KB2, 78K0/KC2, 78K0/KD2 products

n = 0, 1: 78K0/KE2 products whose flash memory is at least 48 KB, and 78K0/KF2 products

(4) Output value of SO1n pin (last bit)

After communication has been completed, the SO1n pin holds the output value of the last bit.

Figure 16-12. Output Value of SO1n Pin (Last Bit) (1/2)

(a) Type 1: CKP1n = 0, DAP1n = 0

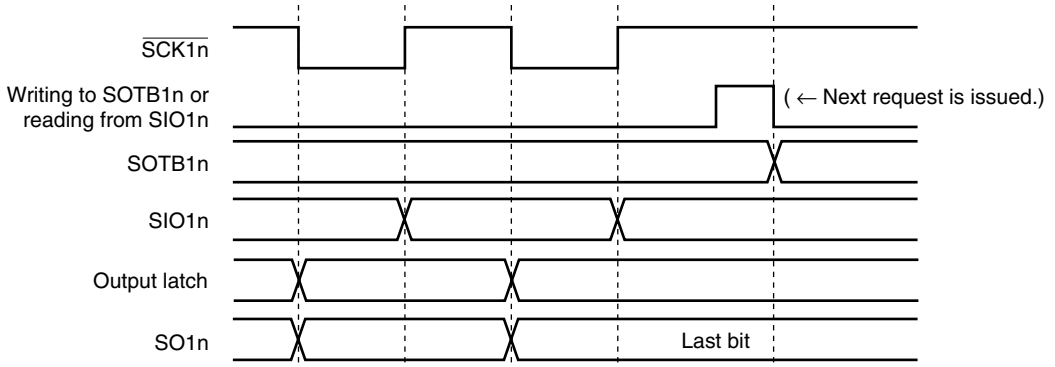

(b) Type 3: CKP1n = 1, DAP1n = 0

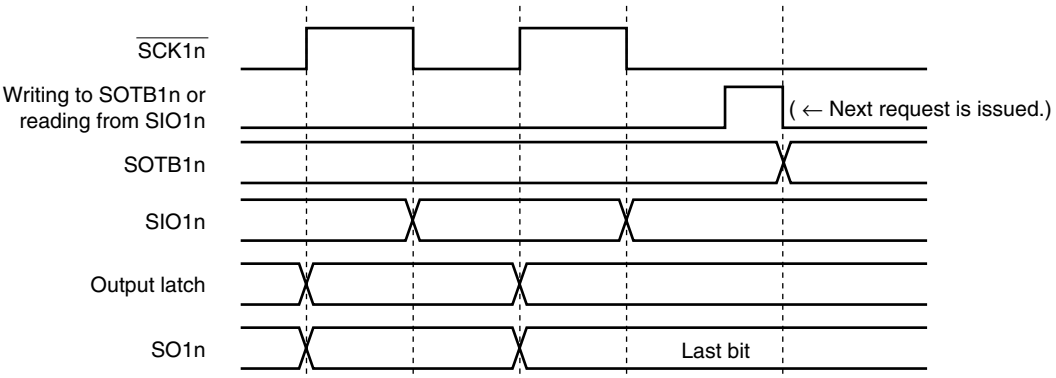

Remark n = 0: 78K0/KE2 products whose flash memory is less than 32 KB, and 78K0/KB2, 78K0/KC2, 78K0/KD2 products

n = 0, 1: 78K0/KE2 products whose flash memory is at least 48 KB, and 78K0/KF2 products

Figure 16-12. Output Value of SO1n Pin (Last Bit) (2/2)

(c) Type 2: CKP1n = 0, DAP1n = 1

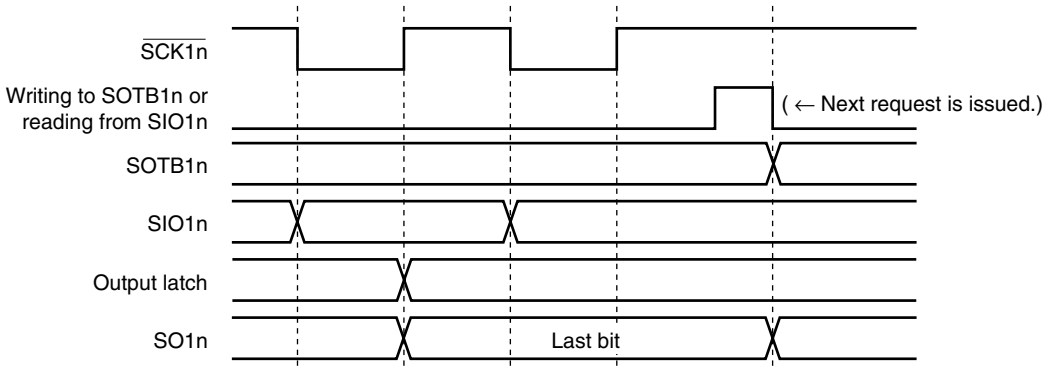

(d) Type 4: CKP1n = 1, DAP1n = 1

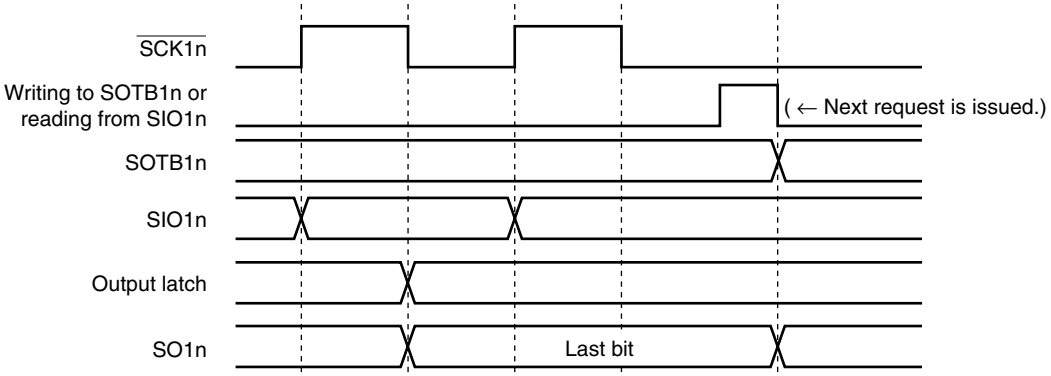

Remark n = 0: 78K0/KE2 products whose flash memory is less than 32 KB, and 78K0/KB2, 78K0/KC2, 78K0/KD2 products

n = 0, 1: 78K0/KE2 products whose flash memory is at least 48 KB, and 78K0/KF2 products

(5) SO1n output (see Figures 16-1 and 16-2)

The status of the SO1n output is as follows depending on the setting of CSIE1n, TRMD1n, DAP1n, and DIR1n.

Table 16-3. SO1n Output Status

CSIE1n	TRMD1n	DAP1n	DIR1n	SO1n Output[Note 1]
CSIE1n = 0[Note 2]	TRMD1n = 0[Notes 2, 3]	–	–	Low level output[Note 2]
	TRMD1n = 1	DAP1n = 0	–	Low level output
		DAP1n = 1	DIR1n = 0	Value of bit 7 of SOTB1n
			DIR1n = 1	Value of bit 0 of SOTB1n
CSIE1n = 1	TRMD1n = 0[Note 3]	–	–	Low level output
	TRMD1n = 1	–	–	Transmission data[Note 4]

Notes 1. The actual output of the SO10/P12 or SO11/P02 pin is determined according to PM12 and P12 or PM02 and P02, as well as the SO1n output.

2. This is a status after reset.

3. To use the P12/SO10 or P02/SO11 pin as general-purpose port, set the serial clock selection register 1n (CSIC1n) in the default status (00H).

4. After transmission has been completed, the SO1n pin holds the output value of the last bit of transmission data.

Caution If a value is written to CSIE1n, TRMD1n, DAP1n, and DIR1n, the output value of SO1n changes.

Remark n = 0: 78K0/KE2 products whose flash memory is less than 32 KB, and 78K0/KB2, 78K0/KC2, 78K0/KD2 products

n = 0, 1: 78K0/KE2 products whose flash memory is at least 48 KB, and 78K0/KF2 products

CHAPTER 17 SERIAL INTERFACE CSIA0

	78K0/KB2	78K0/KC2	78K0/KD2	78K0/KE2	78K0/KF2
Serial interface CSIA0	–				√

Remark √: Mounted, –: Not mounted

17.1 Functions of Serial Interface CSIA0

Serial interface CSIA0 has the following three modes.

(1) Operation stop mode

This mode is used when serial communication is not performed and can enable a reduction in the power consumption.

For details, see **17.4.1 Operation stop mode**.

(2) 3-wire serial I/O mode (MSB/LSB-first selectable)

This mode is to communicate data successively in 8-bit units, by using three lines: serial clock ($\overline{\text{SCKA0}}$) and serial data (SIA0 and SOA0) lines.

The processing time of data communication can be shortened in the 3-wire serial I/O mode because transmission and reception can be simultaneously executed.

In addition, whether 8-bit data is communicated MSB or LSB first can be specified, so this interface can be connected to any device.

For details, see **17.4.2 3-wire serial I/O mode**.

(3) 3-wire serial I/O mode with automatic transmit/receive function (MSB/LSB-first selectable)

This mode is used to communicate data continuously in 8-bit units using three lines: a serial clock line ($\overline{\text{SCKA0}}$) and two serial data lines (SIA0 and SOA0).

The processing time of data communication can be shortened in the 3-wire serial I/O mode with automatic transmit/receive function because transmission and reception can be simultaneously executed.

In addition, whether 8-bit data is communicated MSB or LSB first can be specified, so this interface can be connected to any device.

Data can be communicated to/from a display driver etc. without using software since a 32-byte transfer buffer RAM is incorporated. Also, the incorporation of handshake pins (STB0, BUSY0) used in the master mode has made connection to peripheral ICs easy.

For details, see **17.4.3 3-wire serial I/O mode with automatic transmit/receive function**.

The features of serial interface CSIA0 are as follows.

- Master mode/slave mode selectable
- Communication data length: 8 bits
- MSB/LSB-first selectable for communication data
- Automatic transmit/receive function:
  Number of transfer bytes can be specified between 1 and 32
  Transfer interval can be specified (0 to 63 clocks)
  Single communication/repeat communication selectable
  Internal 32-byte buffer RAM
- On-chip dedicated baud rate generator (6/8/16/32 divisions)
- 3-wire SOA0: Serial data output
  SIA0: Serial data input
  $\overline{\text{SCKA0}}$: Serial clock I/O
- Handshake function incorporated STB0: Strobe output
  BUSY0: Busy input
- Detection of bit shift error due to BUSY0 signal
- Transmission/reception completion interrupt: INTACSI

17.2 Configuration of Serial Interface CSIA0

Serial interface CSIA0 consists of the following hardware.

Table 17-1. Configuration of Serial Interface CSIA0

Item	Configuration
Controller	Serial transfer controller
Registers	Serial I/O shift register 0 (SIOA0)
Control registers	Serial operation mode specification register 0 (CSIMA0) Serial status register 0 (CSIS0) Serial trigger register 0 (CSIT0) Divisor selection register 0 (BRGCA0) Automatic data transfer address point specification register 0 (ADTP0) Automatic data transfer interval specification register 0 (ADTI0) Automatic data transfer address count register 0 (ADTC0) Port mode register 14 (PM14) Port register 14 (P14)

Figure 17-1. Block Diagram of Serial Interface CSIA0

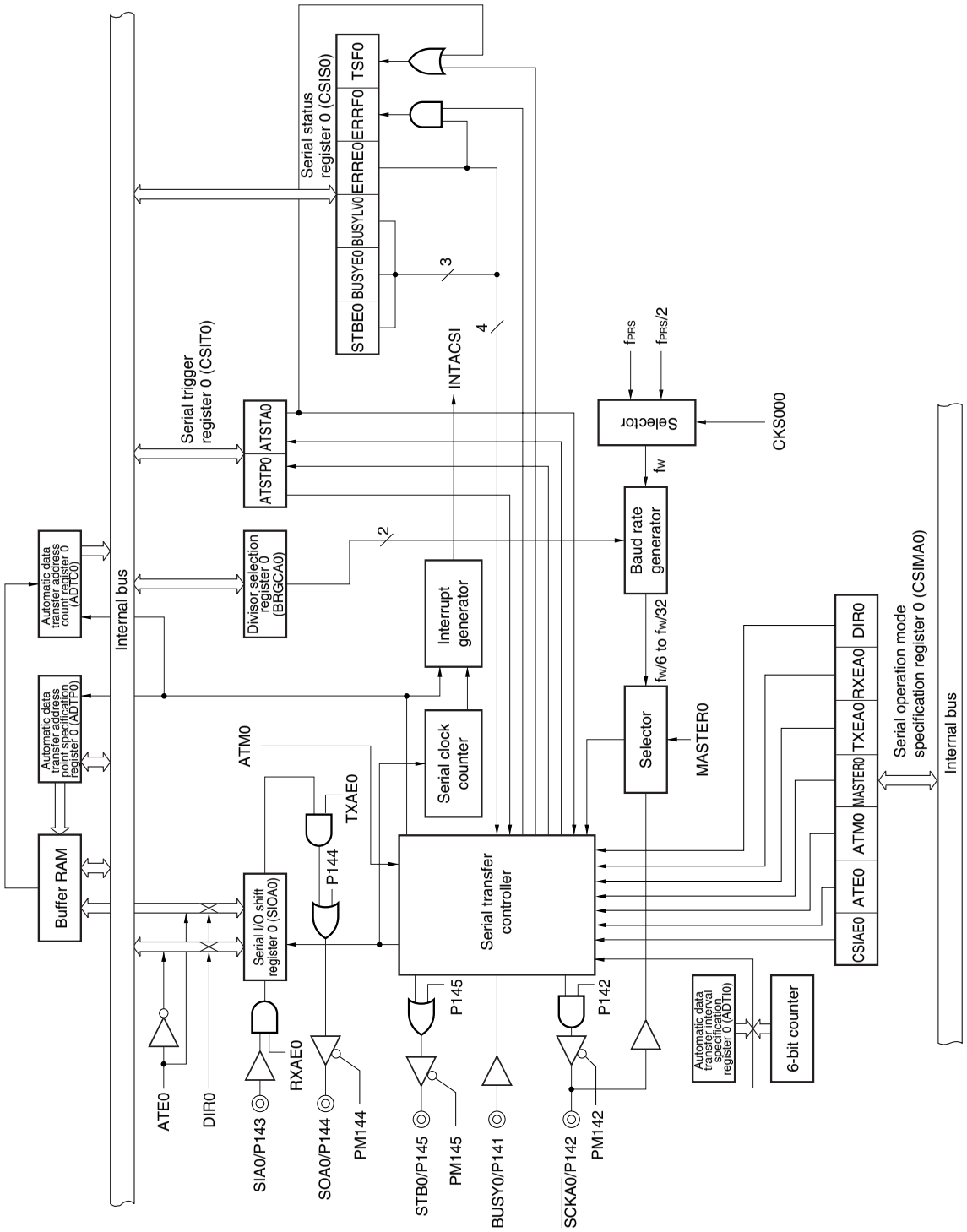

(1) Serial I/O shift register 0 (SIOA0)

This is an 8-bit register used to store transmit/receive data in 1-byte transfer mode (bit 6 (ATE0) of serial operation mode specification register 0 (CSIMA0) = 0). Writing transmit data to SIOA0 starts the communication. In addition, after a communication completion interrupt request (INTACSI) is output (bit 0 (TSF0) of serial status register 0 (CSIS0) = 0), data can be received by reading data from SIOA0.

This register can be written or read by an 8-bit memory manipulation instruction. However, writing to SIOA0 is prohibited when bit 0 (TSF0) of serial status register 0 (CSIS0) = 1.

Reset signal generation clears this register to 00H.

Cautions 1. A communication operation is started by writing to SIOA0. Consequently, when transmission is disabled (bit 3 (TXEA0) of CSIMA0 = 0), write dummy data to the SIOA0 register to start the communication operation, and then perform a receive operation.

2. Do not write data to SIOA0 while the automatic transmit/receive function is operating.

17.3 Registers Controlling Serial Interface CSIA0

Serial interface CSIA0 is controlled by the following nine registers.

- Serial operation mode specification register 0 (CSIMA0)
- Serial status register 0 (CSIS0)
- Serial trigger register 0 (CSIT0)
- Divisor selection register 0 (BRGCA0)
- Automatic data transfer address point specification register 0 (ADTP0)
- Automatic data transfer interval specification register 0 (ADTI0)
- Automatic data transfer address count register 0 (ADTC0)
- Port mode register 14 (PM14)
- Port register 14 (P14)

(1) Serial operation mode specification register 0 (CSIMA0)

This is an 8-bit register used to control the serial communication operation.

This register can be set by a 1-bit or 8-bit memory manipulation instruction.

Reset signal generation clears this register to 00H.

Figure 17-2. Format of Serial Operation Mode Specification Register 0 (CSIMA0)

Address: FF90H After reset: 00H R/W

Symbol	<7>	6	5	4	<3>	<2>	1	0
CSIMA0	CSIAE0	ATE0	ATM0	MASTER0	TXEA0	RXEA0	DIR0	0

CSIAE0	Control of CSIA0 operation enable/disable
0	CSIA0 operation disabled (SOA0: Low level, $\overline{\text{SCKA0}}$: High level) and asynchronously resets the internal circuit[Note 1].
1	CSIA0 operation enabled

ATE0	Control of automatic communication operation enable/disable
0	1-byte communication mode
1	Automatic communication mode

ATM0	Automatic communication mode specification
0	Single transfer mode (stops at the address specified by the ADTP0 register)
1	Repeat transfer mode (after transfer is complete, clear the ADTC0 register to 00H to resume transfer)

MASTER0	CSIA0 master/slave mode specification
0	Slave mode (synchronous with $\overline{\text{SCKA0}}$ input clock)[Note 2]
1	Master mode (synchronous with internal clock)

TXEA0	Control of transmit operation enable/disable
0	Transmit operation disabled (SOA0: Low level)
1	Transmit operation enabled

RXEA0	Control of receive operation enable/disable
0	Receive operation disabled
1	Receive operation enabled

DIR0	First bit specification
0	MSB
1	LSB

Notes 1. Automatic data transfer address count register 0 (ADTC0), serial trigger register 0 (CSIT0), serial I/O shift register 0 (SIOA0), and bit 0 (TSF0) of serial status register 0 (CSIS0) are reset.

2. Do not start communication with the external clock from the $\overline{\text{SCKA0}}$ pin when the internal high-speed oscillation clock and high-speed system clock are stopped while the CPU operates with the subsystem clock, or when in the STOP mode.

Cautions 1. When CSIAE0 = 0, the buffer RAM cannot be accessed.

2. When CSIAE0 is changed from 1 to 0, the registers and bits mentioned in Note above are asynchronously initialized. To set CSIAE0 = 1 again, be sure to re-set the initialized registers.

3. When CSIAE0 is re-set to 1 after CSIAE0 is changed from 1 to 0, it is not guaranteed that the value of the buffer RAM will be retained.

(2) Serial status register 0 (CSIS0)

This is an 8-bit register used to select the base clock, control the communication operation, and indicate the status of serial interface CSIA0.

This register can be set by a 1-bit or 8-bit memory manipulation instruction. However, rewriting CSIS0 is prohibited when bit 0 (TSF0) is 1.

Reset signal generation clears this register to 00H.

Figure 17-3. Format of Serial Status Register 0 (CSIS0) (1/2)

Address: FF91H After reset: 00H R/W[Note 1]

Symbol	7	6	5	4	3	2	1	0
CSIS0	0	CKS00[Note 2]	STBE0	BUSYE0	BUSYLV0	ERRE0	ERRF0	TSF0

CKS00	Base clock (f_W) selection[Note 3]				
		f_{PRS} = 2 MHz	f_{PRS} = 5 MHz	f_{PRS} = 10 MHz	f_{PRS} = 20 MHz
0	f_{PRS}[Note 4]	2 MHz	5 MHz	10 MHz	20 MHz[Note 5]
1	f_{PRS}/2	1 MHz	2.5 MHz	5 MHz	10 MHz

STBE0[Notes 6, 7]	Strobe output enable/disable
0	Strobe output disabled
1	Strobe output enabled

Notes 1. Bits 0 and 1 are read-only.

2. Make sure that bit 7 (CSIAE0) of the Serial Operation Mode Specification Register 0 (CSIMA0) = 0 when rewriting the CKS00 bit.

3. The frequency that can be used for the peripheral hardware clock (f_{PRS}) differs depending on the power supply voltage and product specifications.

Supply Voltage	Conventional-specification Products (μPD78F05xx and 78F05xxD)	Expanded-specification Products (μPD78F05xxA and 78F05xxDA)
4.0 V ≤ V_{DD} ≤ 5.5 V	f_{PRS} ≤ 20 MHz	f_{PRS} ≤ 20 MHz
2.7 V ≤ V_{DD} < 4.0 V	f_{PRS} ≤ 10 MHz	
1.8 V ≤ V_{DD} < 2.7 V (Standard products and (A) grade products only)	f_{PRS} ≤ 5 MHz	f_{PRS} ≤ 5 MHz

(The values shown in the table above are those when f_{PRS} = f_{XH} (XSEL = 1).)

4. If the peripheral hardware clock (f_{PRS}) operates on the internal high-speed oscillation clock (f_{RH}) (XSEL = 0), when 1.8 V ≤ V_{DD} < 2.7 V, the setting of CKS00 = 0 (base clock: f_{PRS}) is prohibited.

5. This is settable only if 4.0 V ≤ V_{DD} ≤ 5.5 V.

6. STBE0 is valid only in master mode.

7. When STBE0 is set to 1, two transfer clocks are consumed between byte transfers regardless of the setting of automatic data transfer interval specification register 0 (ADTI0). That is, 10 transfer clocks are used for 1-byte transfer if ADTI0 = 00H is set.

Caution Be sure to clear bit 7 to 0.

Remark f_{PRS}: Peripheral hardware clock frequency

Figure 17-3. Format of Serial Status Register 0 (CSIS0) (2/2)

BUSYE0	Busy signal detection enable/disable
0	Busy signal detection disabled (input via BUSY0 pin is ignored)
1	Busy signal detection enabled and communication wait by busy signal is executed

BUSYLV0Note 1	Busy signal active level setting
0	Low level
1	High level

ERRE0Note 2	Bit error detection enable/disable
0	Error detection disabled
1	Error detection enabled

ERRF0	Bit error detection flag
0	• Bit 7 (CSIAE0) of serial operation mode specification register 0 (CSIMA0) = 0 • At reset input • When communication is started by setting bit 0 (ATSTA0) of serial trigger register 0 (CSIT0) to 1 or writing to SIOA0.
1	Bit error detected (when ERRE0 = 1, the level specified by BUSYLV0 during the data bit transfer period is detected via BUSY0 pin input).

TSF0	Transfer status detection flag
0	• Bit 7 (CSIAE0) of serial operation mode specification register 0 (CSIMA0) = 0 • At reset input • At the end of the specified transfer • When transfer is stopped by setting bit 1 (ATSTP0) of serial trigger register 0 (CSIT0) to 1
1	From the transfer start to the end of the specified transfer

Notes 1. In bit error detection by busy input, the active level specified by BUSYLV0 is detected.

2. The ERRE0 setting is valid even when BUSYE0 = 0.

Caution During transfer (TSF0 = 1), rewriting serial operation mode specification register 0 (CSIMA0), serial status register 0 (CSIS0), divisor selection register 0 (BRGCA0), automatic data transfer address point specification register 0 (ADTP0), automatic data transfer interval specification register 0 (ADTI0), and serial I/O shift register 0 (SIOA0) are prohibited. However, these registers can be read and re-written to the same value. In addition, the buffer RAM can be rewritten during transfer.

(3) Serial trigger register 0 (CSIT0)

This is an 8-bit register used to control execution/stop of automatic data transfer between buffer RAM and serial I/O shift register 0 (SIOA0).

This register can be set by a 1-bit or 8-bit memory manipulation instruction. This register can be set when bit 6 (ATE0) of serial operation mode specification register 0 (CSIMA0) is 1.

Reset signal generation clears this register to 00H.

Figure 17-4. Format of Serial Trigger Register 0 (CSIT0)

Address: FF92H After reset: 00H R/W

Symbol	7	6	5	4	3	2	<1>	<0>
CSIT0	0	0	0	0	0	0	ATSTP0	ATSTA0

ATSTP0	Automatic data transfer stop
0	–
1	Automatic data transfer stopped

ATSTA0	Automatic data transfer start
0	–
1	Automatic data transfer started

Cautions 1. Even if ATSTP0 or ATSTA0 is set to 1, automatic transfer cannot be started/stopped until 1-byte transfer is complete.

2. ATSTP0 and ATSTA0 change to 0 automatically after the interrupt signal INTACSI is generated.

3. After automatic data transfer is stopped, the data address when the transfer stopped is stored in automatic data transfer address count register 0 (ADTC0). However, since no function to restart automatic data transfer is incorporated, when transfer is stopped by setting ATSTP0 = 1, start automatic data transfer by setting ATSTA0 to 1 after re-setting the registers.

(4) Divisor selection register 0 (BRGCA0)

This is an 8-bit register used to select the base clock divisor of CSIA0.

This register can be set by an 8-bit memory manipulation instruction. However, when bit 0 (TSF0) of serial status register 0 (CSIS0) is 1, rewriting BRGCA0 is prohibited.

Reset signal generation sets this register to 03H.

Figure 17-5. Format of Divisor Selection Register 0 (BRGCA0)

Address: FF93H After reset: 03H R/W

Symbol	7	6	5	4	3	2	1	0
BRGCA0	0	0	0	0	0	0	BRGCA01	BRGCA00

BRGCA01	BRGCA00	Selection of base clock (f_W) divisor of CSIA0[Note]						
			f_W = 1 MHz	f_W = 2 MHz	f_W = 2.5 MHz	f_W = 5 MHz	f_W = 10 MHz	f_W = 20 MHz
0	0	$f_W/6$	166.67 kHz	333.3 kHz	416.67 kHz	833.33 kHz	1.67 MHz	Setting prohibited
0	1	$f_W/2^3$	125 kHz	250 kHz	312.5 kHz	625 kHz	1.25 MHz	Setting prohibited
1	0	$f_W/2^4$	62.5 kHz	125 kHz	156.25 kHz	312.5 kHz	625 kHz	1.25 MHz
1	1	$f_W/2^5$	31.25 kHz	62.5 kHz	78.125 kHz	156.25 kHz	312.5 kHz	625 kHz

Note Set the transfer clock so as to satisfy the following conditions.

- When 4.0 V ≤ V_{DD} ≤ 5.5 V: transfer clock ≤ 1.67 MHz
- When 2.7 V ≤ V_{DD} < 4.0 V: transfer clock ≤ 833.33 kHz
- When 1.8 V ≤ V_{DD} < 2.7 V: transfer clock ≤ 555.56 kHz (Standard products and (A) grade products only)

Remark f_W: Base clock frequency selected by CKS00 bit of CSIS0 register (f_{PRS} or $f_{PRS}/2$)

f_{PRS}: Peripheral hardware clock frequency

(5) Automatic data transfer address point specification register 0 (ADTP0)

This is an 8-bit register used to specify the buffer RAM address that ends transfer during automatic data transfer (bit 6 (ATE0) of serial operation mode specification register 0 = 1).

This register can be set by an 8-bit memory manipulation instruction. However, during transfer (TSF0 = 1), rewriting ADTP0 is prohibited.

In the 78K0/KF2, 00H to 1FH can be specified because 32 bytes of buffer RAM are incorporated.

Example When ADTP0 is set to 07H
8 bytes of FA00H to FA07H are transferred.

In repeat transfer mode (bit 5 (ATM0) of CSIMA0 = 1), transfer is performed repeatedly up to the address specified with ADTP0.

Example When ADTP0 is set to 07H (repeat transfer mode)
Transfer is repeated as FA00H to FA07H, FA00H to FA07H, … .

Figure 17-6. Format of Automatic Data Transfer Address Point Specification Register 0 (ADTP0)

Address: FF94H After reset: 00H R/W

Symbol	7	6	5	4	3	2	1	0
ADTP0	0	0	0	ADTP04	ADTP03	ADTP02	ADTP01	ADTP00

Caution Be sure to clear bits 7 to 5 to "0".

The relationship between transfer end buffer RAM address values and ADTP0 setting values is shown below.

Table 17-2. Relationship Between Transfer End Buffer RAM Address Values and ADTP0 Setting Values

Transfer End Buffer RAM Address Value	ADTP0 Setting Value
FAxxH	xxH

Remark xx: 00 to 1F

(6) Automatic data transfer interval specification register 0 (ADTI0)

This is an 8-bit register used to specify the interval time for byte data transfer during automatic data transfer (bit 6 (ATE0) of serial operation mode specification register 0 (CSIMA0) = 1).

Set this register when in master mode (bit 4 (MASTER0) of CSIMA0 = 1) (setting is unnecessary in slave mode). Setting in 1-byte communication mode (bit 6 (ATE0) of CSIMA0 = 0) is also valid. When the interval time specified by ADTI0 after the end of 1-byte communication has elapsed, an interrupt request signal (INTACSI) is output. The number of clocks for the interval can be set to between 0 and 63 clocks.

This register can be set by an 8-bit memory manipulation instruction. However, when bit 0 (TSF0) of serial status register 0 (CSIS0) is 1, rewriting ADTI0 is prohibited.

Figure 17-7. Format of Automatic Data Transfer Interval Specification Register 0 (ADTI0)

Address: FF95H After reset: 00H R/W

Symbol	7	6	5	4	3	2	1	0
ADTI0	0	0	ADTI05	ADTI04	ADTI03	ADTI02	ADTI01	ADTI00

Caution Because the setting of bit 5 (STBE0) and bit 4 (BUSYE0) of serial status register 0 (CSIS0) takes priority over the ADTI0 setting, the interval time based on the setting of STBE0 and BUSYE0 is generated even when ADTI0 is cleared to 00H.

Example Interval time when ADTI0 = 00H and busy signal is not generated

<1> When STBE0 = 1, BUSYE0 = 0: Interval time of two serial clocks is generated

<2> When STBE0 = 0, BUSYE0 = 1: Interval time of one serial clock is generated

<3> When STBE0 = 1, BUSYE0 = 1: Interval time of two serial clocks is generated

Therefore, clearing STBE0 and BUSYE0 to 0 is required to perform no-wait transfer.

The specified interval time is the serial clock (specified by divisor selection register 0 (BRGCA0)) multiplied by an integer value.

Example When ADTI0 = 03H

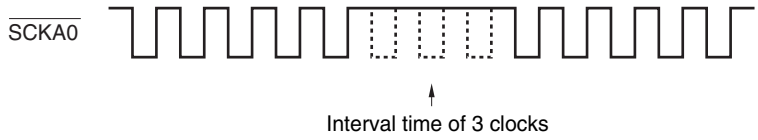

(7) Automatic data transfer address count register 0 (ADTC0)

This is a register used to indicate buffer RAM addresses during automatic transfer. When automatic transfer is stopped, the data position when transfer stopped can be ascertained by reading ADTC0 register value.

This register can be read by an 8-bit memory manipulation instruction.

Reset signal generation clears this register to 00H. However, reading from ADTC0 is prohibited when bit 0 (TSF0) of serial status register 0 (CSIS0) = 1.

Figure 17-8. Format of Automatic Data Transfer Address Count Register 0 (ADTC0)

Address: FF97H After reset: 00H R

Symbol	7	6	5	4	3	2	1	0
ADTC0	0	0	0	ADTC04	ADTC03	ADTC02	ADTC01	ADTP00

(8) Port mode register 14 (PM14)

This register sets port 14 input/output in 1-bit units.

When using P142/$\overline{\text{SCKA0}}$ pin as the clock output of the serial interface, clear PM142 to 0 and set the output latch of P142 to 1.

When using P144/SOA0 and P145/STB0 pins as the data output or strobe output of the serial interface, clear PM144, PM145, and the output latches of P144 and P145 to 0.

When using P141/BUSY0, P142/$\overline{\text{SCKA0}}$, and P143/SIA0 pins as the busy input, clock input, or data input of the serial interface, set PM141, PM142, and PM143 to 1. At this time, the output latches of P141, P142, and P143 may be 0 or 1.

PM14 can be set by a 1-bit or 8-bit memory manipulation instruction.

Reset signal generation sets this register to FFH.

Figure 17-9. Format of Port Mode Register 14 (PM14)

Address: FF2EH After reset: FFH R/W

Symbol	7	6	5	4	3	2	1	0
PM14	1	1	PM145	PM144	PM143	PM142	PM141	PM140

PM14n	P14n pin I/O mode selection (n = 0 to 5)
0	Output mode (output buffer on)
1	Input mode (output buffer off)

17.4 Operation of Serial Interface CSIA0

Serial interface CSIA0 has the following three modes.

- Operation stop mode
- 3-wire serial I/O mode
- 3-wire serial I/O mode with automatic transmit/receive function

17.4.1 Operation stop mode

Serial communication is not executed in this mode. Therefore, the power consumption can be reduced. In addition, the P142/$\overline{\text{SCKA0}}$, P143/SIA0, and P144/SOA0 pins can be used as ordinary I/O port pins in this mode.

(1) Register used

The operation stop mode is set by serial operation mode specification register 0 (CSIMA0). To set the operation stop mode, clear bit 7 (CSIAE0) of CSIMA0 to 0.

(a) Serial operation mode specification register 0 (CSIMA0)

This is an 8-bit register used to control the serial communication operation.

This register can be set by a 1-bit or 8-bit memory manipulation instruction.

Reset signal generation clears this register to 00H.

Address: FF90H After reset: 00H R/W

	<7>	6	5	4	<3>	<2>	1	0
CSIMA0	CSIAE0	ATE0	ATM0	MASTER0	TXEA0	RXEA0	DIR0	0

CSIAE0	Control of CSIA0 operation enable/disable
0	CSIA0 operation disabled (SOA0: Low level, $\overline{\text{SCKA0}}$: High level) and asynchronously resets the internal circuit

17.4.2 3-wire serial I/O mode

The one-byte data transmission/reception is executed in the mode in which bit 6 (ATE0) of serial operation mode specification register 0 (CSIMA0) is cleared to 0.

The 3-wire serial I/O mode is useful for connecting peripheral ICs and display controllers with a clocked serial interface.

In this mode, communication is executed by using three lines: serial clock ($\overline{SCKA0}$), serial output (SOA0), and serial input (SIA0) lines.

(1) Registers used

- Serial operation mode specification register 0 (CSIMA0)[Note 1]
- Serial status register 0 (CSIS0)[Note 2]
- Divisor selection register 0 (BRGCA0)
- Port mode register 14 (PM14)
- Port register 14 (P14)

Notes 1. Bits 7, 6, and 4 to 1 (CSIAE0, ATE0, MASTER0, TXEA0, RXEA0, and DIR0) are used. Setting of bit 5 (ATM0) is invalid.

2. Only bit 0 (TSF0) and bit 6 (CKS00) are used.

The basic procedure of setting an operation in the 3-wire serial I/O mode is as follows.

<1> Set bit 6 (CKS00) of the CSIS0 register (see **Figure 17-3**)[Note 1].
<2> Set the BRGCA0 register (see **Figure 17-5**)[Note 1].
<3> Set bits 4 to 1 (MASTER0, TXEA0, RXEA0, and DIR0) of the CSIMA0 register (see **Figure 17-2**).
<4> Set bit 7 (CSIAE0) of the CSIMA0 register to 1 and clear bit 6 (ATE0) to 0.
<5> Write data to serial I/O shift register 0 (SIOA0). → Data transmission/reception is started[Note 2].

Notes 1. This register does not have to be set when the slave mode is specified (MASTER0 = 0).

2. Write dummy data to SIOA0 only for reception.

Caution Take relationship with the other party of communication when setting the port mode register and port register.

The relationship between the register settings and pins is shown below.

Table 17-3. Relationship Between Register Settings and Pins

CSIAE0	ATE0	MASTER0	PM143	P143	PM144	P144	PM142	P142	Serial I/O Shift Register 0 Operation	Serial Clock Counter Operation Control	Pin Function		
											SIA0/ P143	SOA0/ P144	$\overline{\text{SCKA0}}$/ P142
0	×	×	×Note 1	×Note 1	×Note 1	×Note 1	×Note 1	×Note 1	Operation stopped	Clear	P143	P144	P142
1	0	0	1Note 2	×Note 2	0Note 3	0Note 3	1	×	Operation enabled	Count operation	SIA0Note 2	SOA0Note 3	$\overline{\text{SCKA0}}$ (input)
		1					0	1					$\overline{\text{SCKA0}}$ (output)

Notes 1. Can be set as port function.

2. Can be used as P143 when only transmission is performed. Clear bit 2 (RXEA0) of CSIMA0 to 0.

3. Can be used as P144 when only reception is performed. Clear bit 3 (TXEA0) of CSIMA0 to 0.

Remark ×: don't care
CSIAE0: Bit 7 of serial operation mode specification register 0 (CSIMA0)
ATE0: Bit 6 of CSIMA0
MASTER0: Bit 4 of CSIMA0
PM14×: Port mode register
P14×: Port output latch

(2) 1-byte transmission/reception communication operation

(a) 1-byte transmission/reception

When bit 7 (CSIAE0) and bit 6 (ATE0) of serial operation mode specification register 0 (CSIMA0) = 1, 0, respectively, if communication data is written to serial I/O shift register 0 (SIOA0), the data is output via the SOA0 pin in synchronization with the $\overline{\text{SCKA0}}$ falling edge, and stored in the SIOA0 register in synchronization with the rising edge 1 clock later.

Data transmission and data reception can be performed simultaneously.

If only reception is to be performed, communication can only be started by writing a dummy value to the SIOA0 register.

When communication of 1 byte is complete, an interrupt request signal (INTACSI) is generated.

In 1-byte transmission/reception, the setting of bit 5 (ATM0) of CSIMA0 is invalid.

Be sure to read data after confirming that bit 0 (TSF0) of serial status register 0 (CSIS0) = 0.

Figure 17-10. 3-Wire Serial I/O Mode Timing

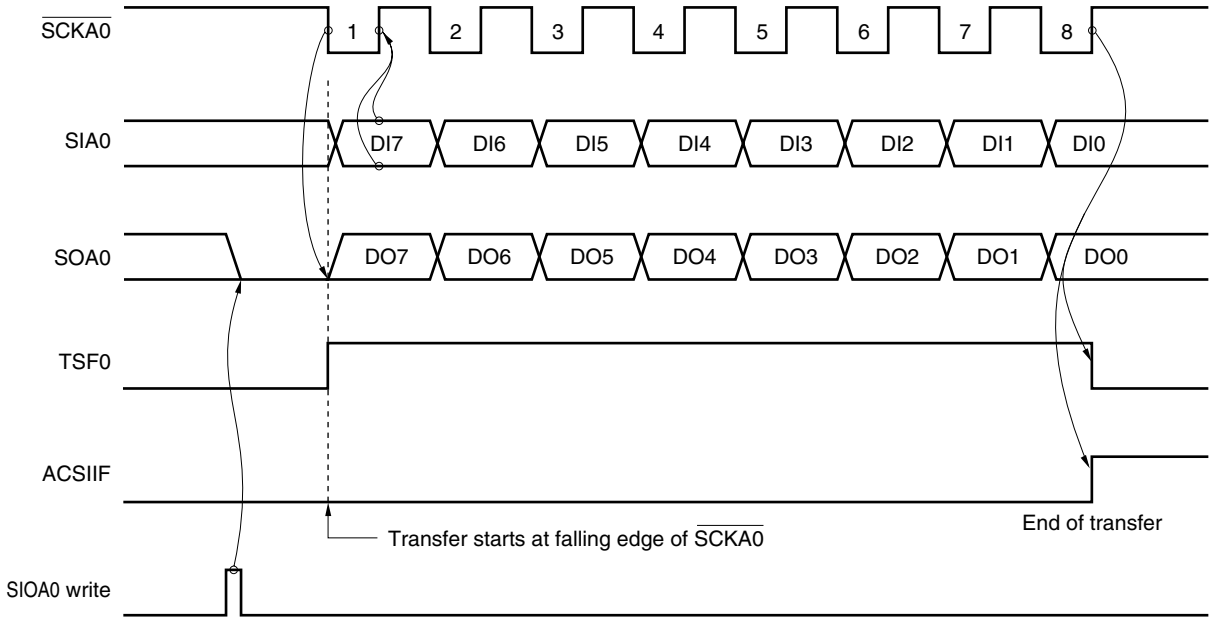

Caution The SOA0 pin becomes low level by an SIOA0 write.

(b) Data format

In the data format, data is changed in synchronization with the $\overline{\text{SCKA0}}$ falling edge as shown below.

The data length is fixed to 8 bits and the data communication direction can be switched by the specification of bit 1 (DIR0) of serial operation mode specification register 0 (CSIMA0).

Figure 17-11. Format of Transmit/Receive Data

(a) MSB-first (DIR0 bit = 0)

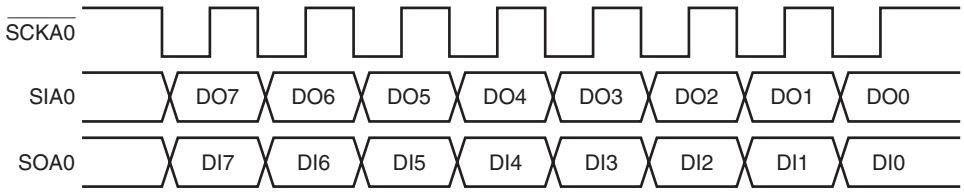

(b) LSB-first (DIR0 bit = 1)

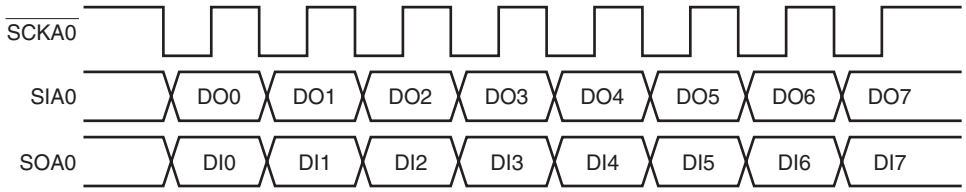

(c) Switching MSB/LSB as start bit

Figure 17-12 shows the configuration of serial I/O shift register 0 (SIOA0) and the internal bus. As shown in the figure, MSB/LSB can be read/written in reverse form.

Switching MSB/LSB as the start bit can be specified using bit 1 (DIR0) of serial operation mode specification register 0 (CSIMA0).

Figure 17-12. Transfer Bit Order Switching Circuit

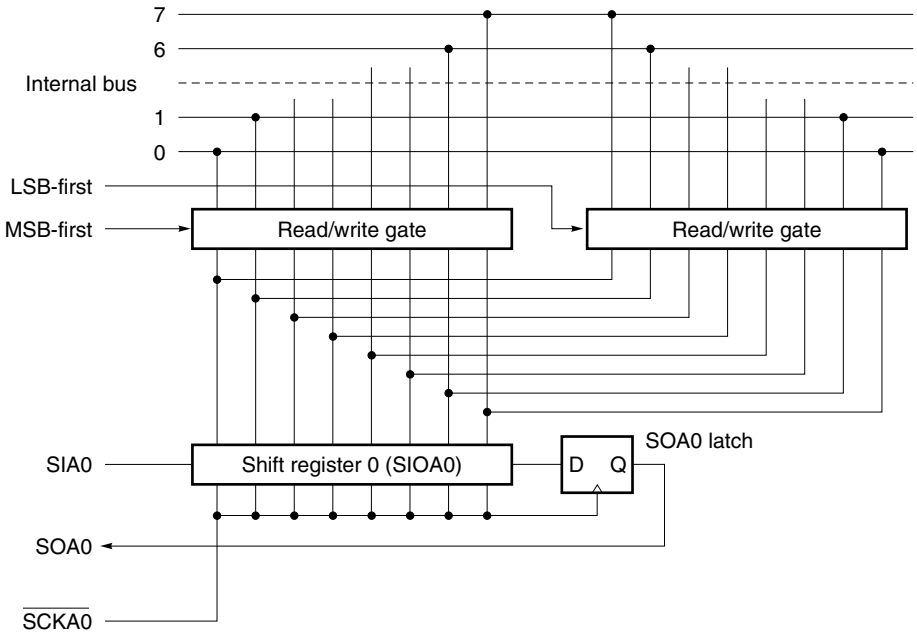

Start bit switching is realized by switching the bit order for data written to SIOA0. The SIOA0 shift order remains unchanged.

Thus, switching between MSB-first and LSB-first must be performed before writing data to the shift register.

(d) Communication start

Serial communication is started by setting communication data to serial I/O shift register 0 (SIOA0) when the following two conditions are satisfied.

- Serial interface CSIA0 operation control bit (CSIAE0) = 1
- Serial communication is not in progress

Caution If CSIAE0 is set to 1 after data is written to SIOA0, communication does not start.

Upon termination of 8-bit communication, serial communication automatically stops and the interrupt request flag (ACSIIF) is set.

17.4.3 3-wire serial I/O mode with automatic transmit/receive function

Up to 32 bytes of data can be transmitted/received without using software in the mode in which bit 6 (ATE0) of serial operation mode specification register 0 (CSIMA0) is set to 1. After communication is started, only data of the set number of bytes stored in RAM in advance can be transmitted, and only data of the set number of bytes can be received and stored in RAM.

In addition, to transmit/receive data continuously when used as the master, handshake signals (STB0 and BUSY0) generated by hardware are supported. Therefore, connection to peripheral ICs such as OSD (On Screen Display) ICs and LCD controller/drivers can be easily realized.

(1) Registers used

- Serial operation mode specification register 0 (CSIMA0)
- Serial status register 0 (CSIS0)
- Serial trigger register 0 (CSIT0)
- Divisor selection register 0 (BRGCA0)
- Automatic data transfer address point specification register 0 (ADTP0)
- Automatic data transfer interval specification register 0 (ADTI0)
- Port mode register 14 (PM14)
- Port register 14 (P14)

The relationship between the register settings and pins is shown below.

Caution A wait state may be generated when data is written to the buffer RAM. For details, see CHAPTER 36 CAUTIONS FOR WAIT.

Table 17-4. Relationship Between Register Settings and Pins

CSIAE0	ATE0	MASTER0	STBE0	BUSYE0	ERRE0	PM143	P143	PM144	P144	PM142	P142	PM145	P145	PM141	P141	Serial I/O Shift Register 0 Operation	Serial Clock Counter Operation Control	Pin Function				
																		SIA0/ P143	SOA0/ P144	$\overline{\text{SCKA0}}$/ P142	STB0/ P145	BUSY0/ P141
0	×	×	×	×Note 1	×Note 1	×Note 1	×Note 1	×Note 1	×Note 1	×Note 1	×Note 1	×Note 1	×Note 1	×Note 1	×Note 1	Operation stopped	Clear	P143	P144	P142	P145	P141
1	1	0	×Note 1	×Note 1	0/1	1	×	0	0	1	×	×Note 1	×Note 1	×Note 1	×Note 1	Operation enabled	Count operation	Note 2 SIA0	Note 3 SOA10	$\overline{\text{SCKA0}}$ (input)	P145	P141
		1	0	0	0/1					0	1	×Note 1	×Note 1	×Note 1	×Note 1					$\overline{\text{SCKA0}}$ (output)	P145	P141
			1	1	0/1							0	0	1	×						STB0	BUSY0

Notes 1. Can be set as port function.

2. Can be used as P143 when only transmission is performed. Clear bit 2 (RXEA0) of CSIMA0 to 0.

3. Can be used as P144 when only reception is performed. Clear bit 3 (TXEA0) of CSIMA0 to 0.

Remark ×: don't care

CSIAE0: Bit 7 of serial operation mode specification register 0 (CSIMA0)

ATE0: Bit 6 of CSIMA0

MASTER0: Bit 4 of CSIMA0

STBE0: Bit 5 of serial status register 0 (CSIS0)

BUSYE0: Bit 4 of CSIS0

ERRE0: Bit 2 of CSIS0

PM14×: Port mode register

P14×: Port output latch

(2) Automatic transmit/receive data setting

Here is an example of the procedure for successively transmitting/receiving data as the master.

<1> Enable CSIA0 to operate by setting bit 7 (CSIAE0) of serial operation mode specification register 0 (CSIMA0) to 1 (the buffer RAM can now be accessed).
<2> Select a serial clock by using serial status register 0 (CSIS0).
<3> Set the division ratio of the serial clock by using division value selection register 0 (BRGCA0), and specify a communication rate.
<4> Sequentially write data to be transmitted to the buffer RAM, starting from the least significant address FA00H, up to FA1FH. Data is transmitted from the lowest address, continuing on to higher addresses.
<5> Set "number of data items to be transmitted − 1" to automatic data transfer address point specification register 0 (ADTP0).
<6> Set bits 6 (ATE0) and 4 (MASTER0) of CSIMA0 to select a master operation in the automatic communication mode.
<7> Set bits 3 (TXEA0) and 2 (RXEA0) of CSIMA0 to 1 to enable transmission/reception.
<8> Set the transmission interval of data to the automatic data transfer interval specification register (ADTI0).
<9> Automatic transmit/receive processing is started when bit 0 (ATSTA0) of serial trigger register 0 (CSIT0) is set to 1.

Caution Take the relationship with the other communicating party into consideration when setting the port mode register and port register.

Operations <1> to <9> execute the following operation.

- After the buffer RAM data indicated by automatic data transfer address count register 0 (ADTC0) is transferred to SIOA0, transmission is carried out (start of automatic transmission/reception).
- The received data is written to the buffer RAM address indicated by ADTC0.
- ADTC0 is incremented and the next data transmission/reception is carried out. Data transmission/reception continues until the ADTC0 incremental output matches the set value of automatic data transfer address point specification register 0 (ADTP0) (end of automatic transmission/reception). However, if bit 5 (ATM0) of CSIMA0 is set to 1 (repeat mode), ADTC0 is cleared after a match between ADTP0 and ADTC0, and then repeated transmission/reception is started.
- When automatic transmission/reception is terminated, an interrupt request (INTACSI) is generated and bit 0 (TSF0) of CSIS0 is cleared.
- To continue transmitting the next data, set the new data to the buffer RAM, and set "number of data to be transmitted − 1" to ADTP0. After setting the number of data, set ATSTA0 to 1.

(3) Automatic transmission/reception communication operation

(a) Automatic transmission/reception mode

Automatic transmission/reception can be performed using buffer RAM.

The data stored in the buffer RAM is output from the SOA0 pin via the SIOA0 register in synchronization with the $\overline{\text{SCKA0}}$ falling edge by performing **(2) Automatic transmit/receive data setting**.

The receive data is stored in the buffer RAM via the SIOA0 register in synchronization with the $\overline{\text{SCKA0}}$ rising edge.

Data transfer ends if bit 0 (TSF0) of serial status register 0 (CSIS0) is set to 1 when any of the following conditions is met.

- Communication stop: Reset by clearing bit 7 (CSIAE0) of the CSIMA0 register to 0
- Communication suspension: Transfer of 1 byte is complete by setting bit 1 (ATSTP0) of the CSIT0 register to 1
- Bit shift error: Transfer of 1 byte is complete when bit 1 (ERRF0) of the CSIS0 register becomes 1 while bit 2 (ERRE0) = 1
- Transfer of the range specified by the ADTP0 register is complete

At this time, an interrupt request signal (INTACSI) is generated except when the CSIAE0 bit = 0.

If a transfer is terminated in the middle, transfer starting from the remaining data is not possible. Read automatic data transfer address count register 0 (ADTC0) to confirm how much of the data has already been transferred and re-execute transfer by performing **(2) Automatic transmit/receive data setting**.

In addition, when busy control and strobe control are not performed, the BUSY0/BUZ/INTP7/P141 and STB0/P145 pins can be used as ordinary I/O port pins.

Figure 17-13 shows the example of the operation timing in automatic transmission/reception mode and Figure 17-14 shows the operation flowchart. Figures 17-15 and 17-16 show the operation of internal buffer RAM when 6 bytes of data are transmitted/received.

Figure 17-13. Example of Automatic Transmission/Reception Mode Operation Timings

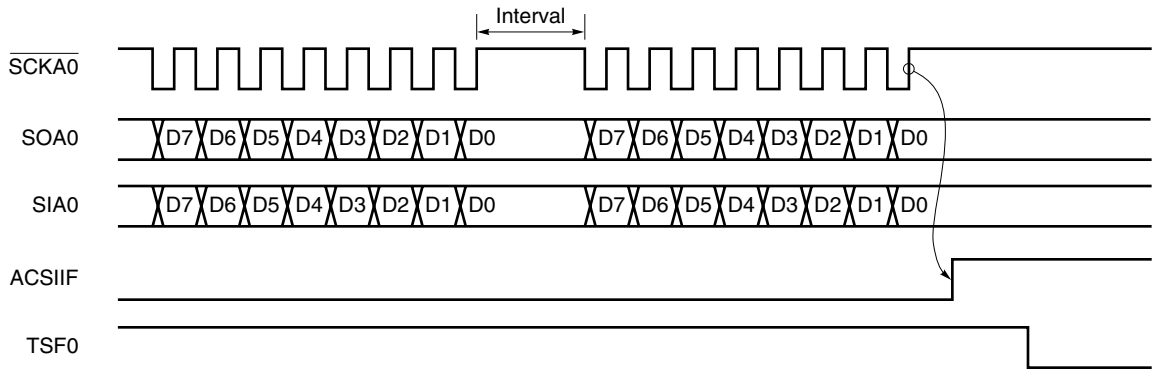

Cautions 1. Because, in the automatic transmission/reception mode, the automatic transmit/receive function writes/reads data to/from the internal buffer RAM after 1-byte transmission/reception, an interval is inserted until the next transmission/reception. As the buffer RAM write/read is performed at the same time as CPU processing, the interval is dependent upon the value of automatic data transfer interval specification register 0 (ADTI0) and the set values of bits 5 and 4 (STBE0, BUSYE0) of serial status register 0 (CSIS0) (see (5) Automatic transmit/receive interval time).

2. If an access to the buffer RAM by the CPU conflicts with an access to the buffer RAM by serial interface CSIA0 during the interval period, the interval time specified by automatic data transfer interval specification register 0 (ADTI0) may be extended.

Remark ACSIIF: Interrupt request flag
TSF0: Bit 0 of serial status register 0 (CSIS0)

Figure 17-14. Automatic Transmission/Reception Mode Flowchart

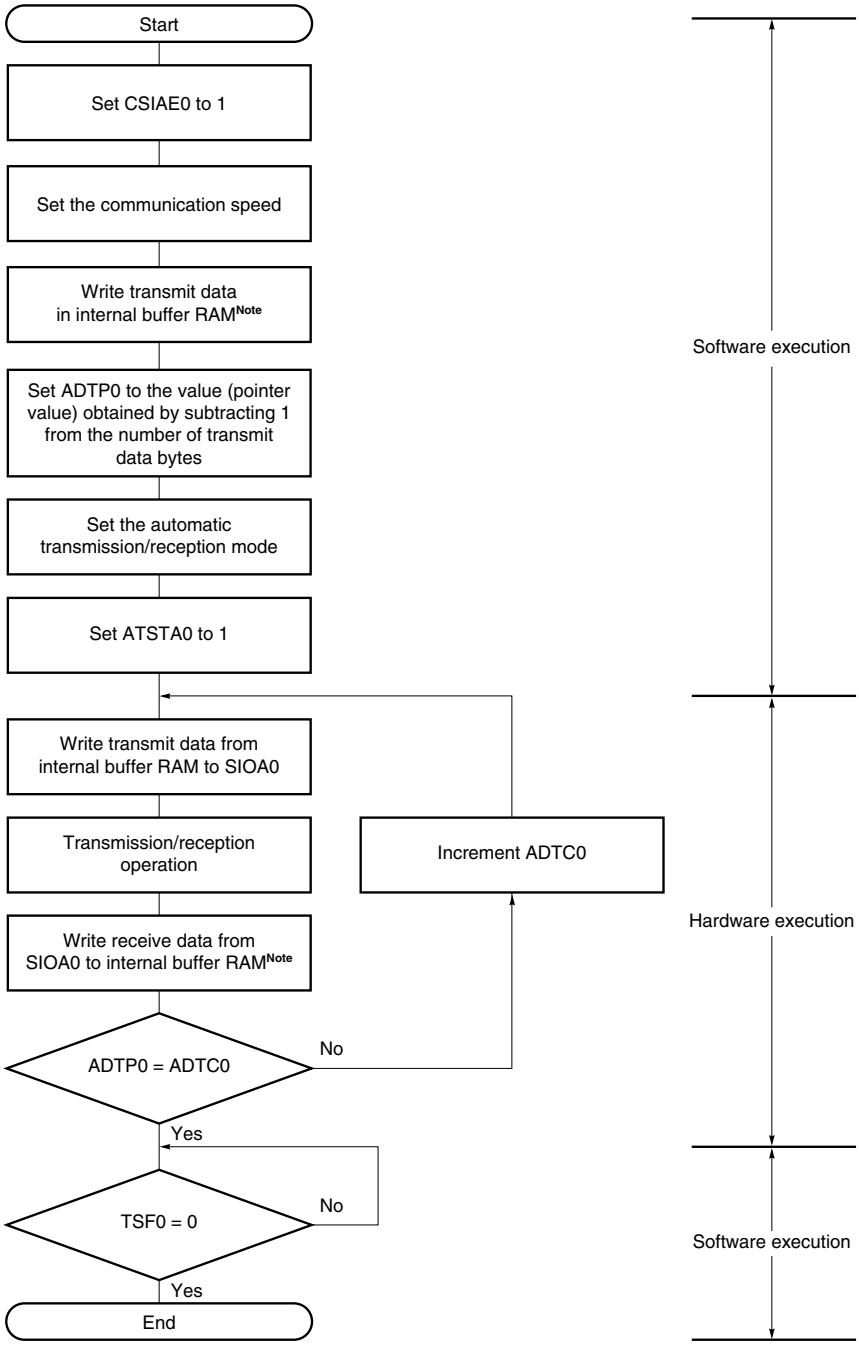

CSIAE0: Bit 7 of serial operation mode specification register 0 (CSIMA0)
ADTP0: Automatic data transfer address point specification register 0
ADTI0: Automatic data transfer interval specification register 0
ATSTA0: Bit 0 of serial trigger register 0 (CSIT0)
SIOA0: Serial I/O shift register 0
ADTC0: Automatic data transfer address count register 0
TSF0: Bit 0 of serial status register 0 (CSIS0)

Note A wait state may be generated when data is written to the buffer RAM. For details, see **CHAPTER 36 CAUTIONS FOR WAIT**.

In 6-byte transmission/reception (ATM0 = 0, RXEA0 = 1, TXEA0 = 1, ATE0 = 1) in automatic transmission/reception mode, internal buffer RAM operates as follows.

(i) Starting automatic transmission/reception (see Figure 17-15)

<1> When bit 0 (ATSTA0) of serial trigger register 0 (CSIT0) is set to 1, transmit data 1 (T1) is transferred from the internal buffer RAM to SIOA0 and transmission/reception is started.

<2> When transmission of the first byte is completed, the receive data 1 (R1) is transferred from SIOA0 to the buffer RAM, and automatic data transfer address count register 0 (ADTC0) is incremented.

<3> Next, transmit data 2 (T2) is transferred from the internal buffer to SIOA0.

Figure 17-15. Internal Buffer RAM Operation in Automatic Transmission/Reception Mode (Starting Transmission/Reception) (1/2)

<1> Starting 1st byte transmission/reception

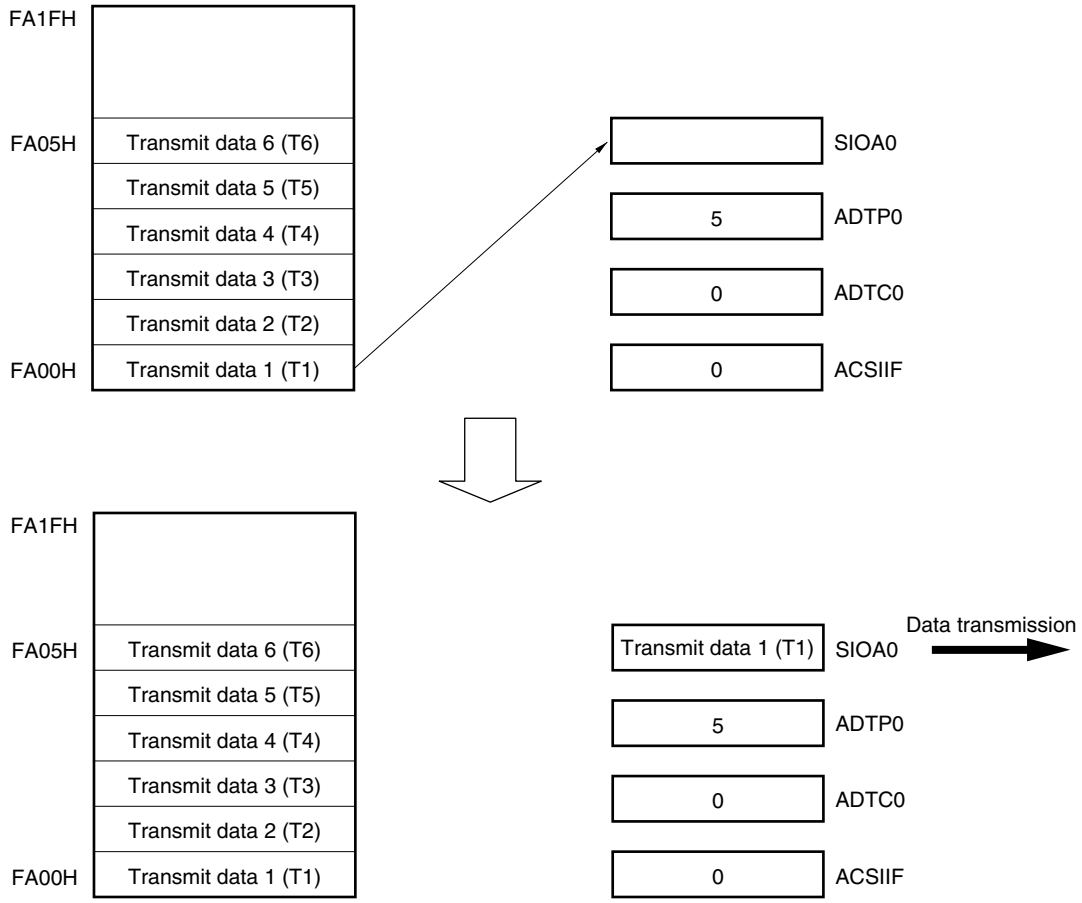

Figure 17-15. Internal Buffer RAM Operation in Automatic Transmission/Reception Mode (Starting Transmission/Reception) (2/2)

<2> End of 1st byte transmission/reception

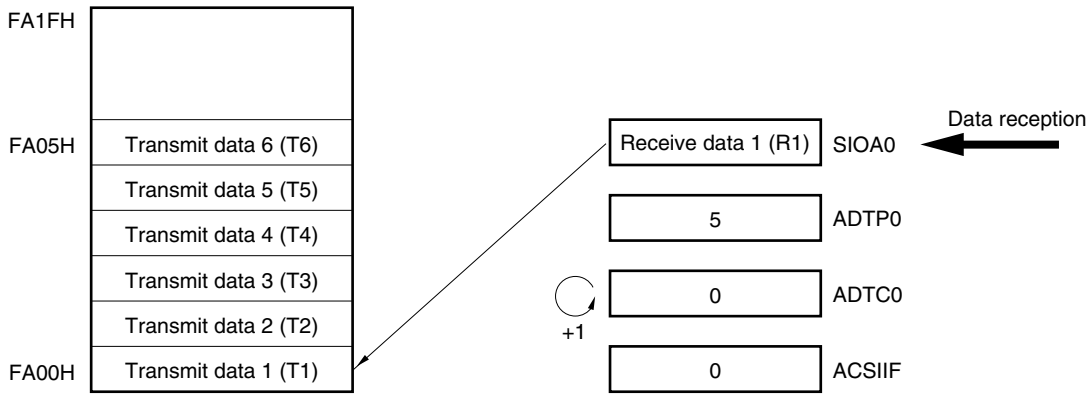

<3> Starting of 2nd byte transmission/reception

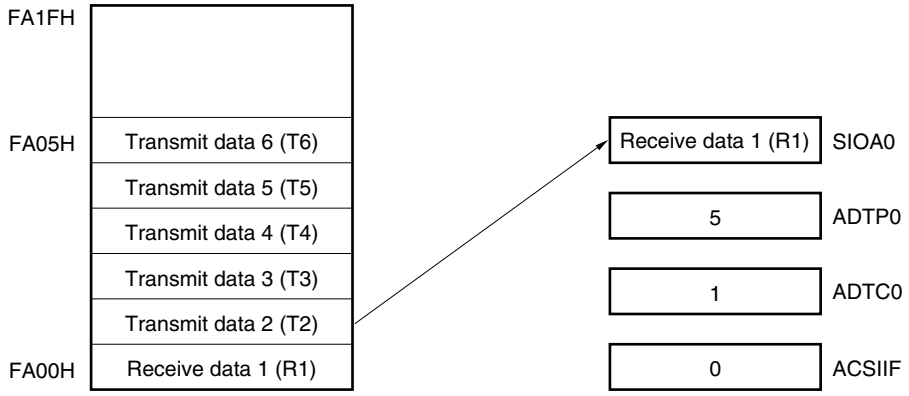

(ii) Completion of transmission/reception (see Figure 17-16)

<1> When transmission/reception of the sixth byte is completed, receive data 6 (R6) is transferred from SIOA0 to the internal buffer RAM and ADTC0 is incremented.

<2> When the value of ADPT0 and that of ADTC0 match, the automatic transmission/reception ends, and an interrupt request flag (ACSIIF) is set (INTACSI is generated). ADTC0 and bit 0 (TSF0) of serial status register 0 (CSIS0) are cleared to 0.

Figure 17-16. Internal Buffer RAM Operation in Automatic Transmission/Reception Mode (End of Transmission/Reception)

<1> End of 6th byte transmission/reception

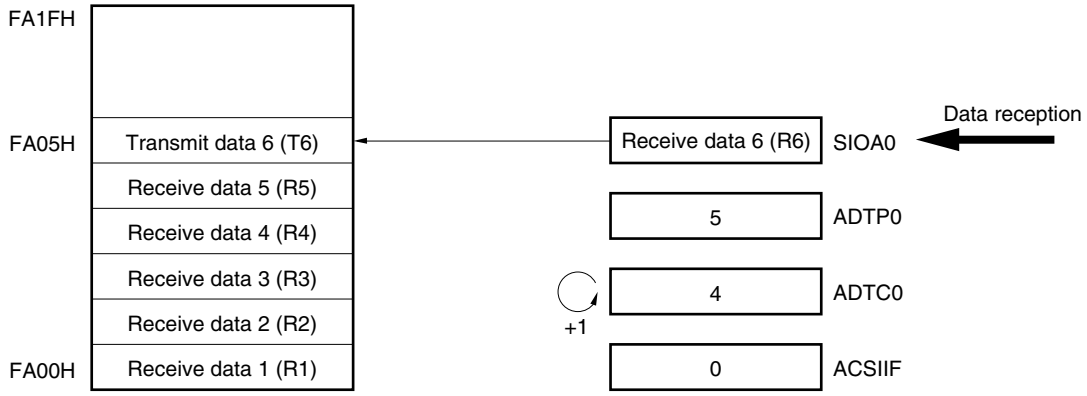

<2> End of automatic transmission/reception

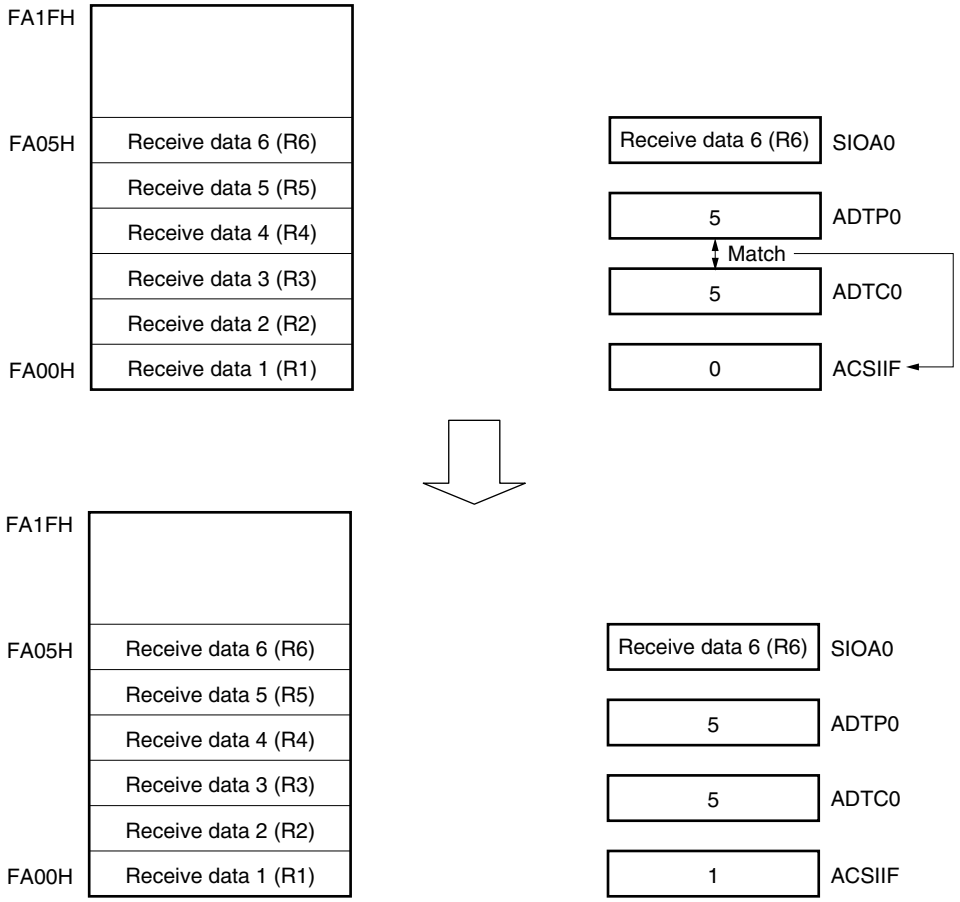

(b) Automatic transmission mode

In this mode, the specified data is transmitted in 8-bit unit.

Serial communication is started when bit 0 (ATSTA0) of serial trigger register 0 (CSIT0) is set to 1 while bit 7 (CSIAE0), bit 6 (ATE0), and bit 3 (TXEA0) of serial operation mode specification register 0 (CSIMA0) are set to 1.

When the final byte has been transmitted, an interrupt request flag (ACSIIF) is set. The termination of automatic transmission can also be judged by bit 0 (TSF0) of serial status register 0 (CSIS0).

If a receive operation, busy control and strobe control are not executed, the SIA0/P143, BUSY0/BUZ/INTP7/P141, and STB0/P145 pins can be used as normal I/O port pins.

Figure 17-17 shows the example of the automatic transmission mode operation timing, and Figure 17-18 shows the operation flowchart.

Figure 17-17. Example of Automatic Transmission Mode Operation Timing

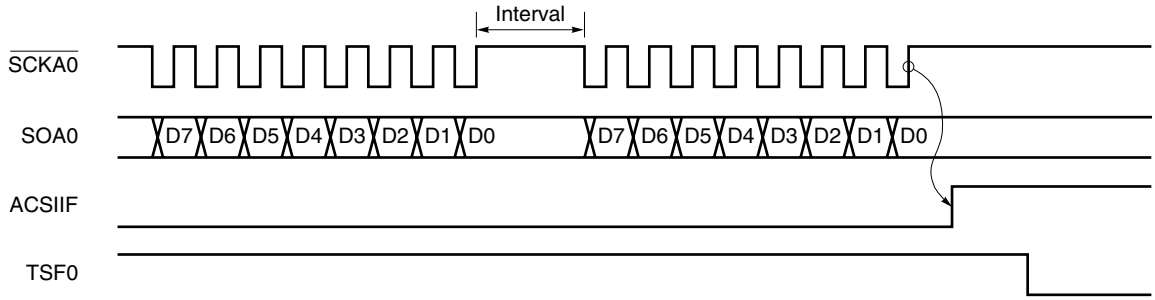

Cautions 1. Because, in the automatic transmission mode, the automatic transmit/receive function reads data from the internal buffer RAM after 1-byte transmission, an interval is inserted until the next transmission. As the buffer RAM read is performed at the same time as CPU processing, the interval is dependent upon the value of automatic data transfer interval specification register 0 (ADTI0) and the set values of bits 5 and 4 (STBE0, BUSYE0) of serial status register 0 (CSIS0) (see (5) Automatic transmit/receive interval time).

2. If an access to the buffer RAM by the CPU conflicts with an access to the buffer RAM by serial interface CSIA0 during the interval period, the interval time specified by automatic data transfer interval specification register 0 (ADTI0) may be extended.

Remark ACSIIF: Interrupt request flag
TSF0: Bit 0 of serial status register 0 (CSIS0)

Figure 17-18. Automatic Transmission Mode Flowchart

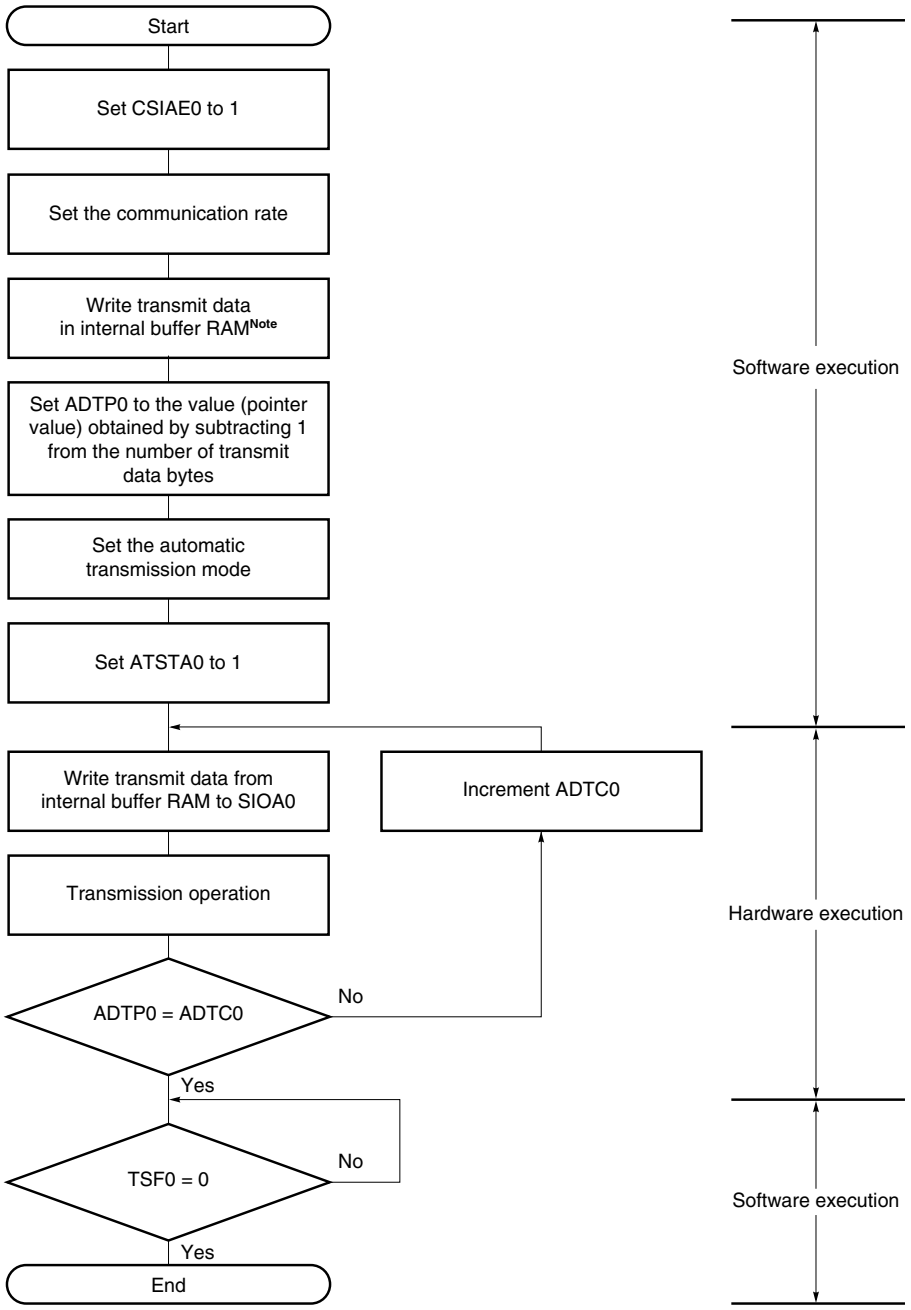

CSIAE0: Bit 7 of serial operation mode specification register 0 (CSIMA0)
ADTP0: Automatic data transfer address point specification register 0
ADTI0: Automatic data transfer interval specification register 0
ATSTA0: Bit 0 of serial trigger register 0 (CSIT0)
SIOA0: Serial I/O shift register 0
ADTC0: Automatic data transfer address count register 0
TSF0: Bit 0 of serial status register 0 (CSIS0)

Note A wait state may be generated when data is written to the buffer RAM. For details, see **CHAPTER 36 CAUTIONS FOR WAIT**.

(c) Repeat transmission mode

In this mode, data stored in the internal buffer RAM is transmitted repeatedly.

Serial communication is started when bit 0 (ATSTA0) of serial trigger register 0 (CSIT0) is set to 1 while bit 7 (CSIAE0), bit 6 (ATE0), bit 5 (ATM0), and bit 3 (TXEA0) of serial operation mode specification register 0 (CSIMA0) are set to 1.

Unlike the automatic transmission mode, after the number of setting bytes has been transmitted, the interrupt request flag (ACSIIF) is not set, automatic data transfer address count register 0 (ADTC0) is reset to 0, and the internal buffer RAM contents are transmitted again.

When a reception operation, busy control and strobe control are not performed, the SIA0/P143, BUSY0/BUZ/INTP7/P141, and STB0/P145 pins can be used as ordinary I/O port pins.

The example of the repeat transmission mode operation timing is shown in Figure 17-19, and the operation flowchart in Figure 17-20.

Figure 17-19. Example of Repeat Transmission Mode Operation Timing

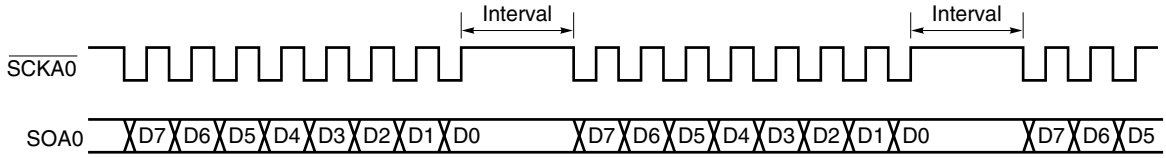

Cautions 1. Because, in the repeat transmission mode, a read is performed on the buffer RAM after the transmission of one byte, the interval is included in the period up to the next transmission. As the buffer RAM read is performed at the same time as CPU processing, the interval is dependent upon automatic data transfer interval specification register 0 (ADTI0) and the set values of bits 5 and 4 (STBE0, BUSYE0) of serial status register 0 (CSIS0) (see (5) Automatic transmit/receive interval time).

2. If an access to the buffer RAM by the CPU conflicts with an access to the buffer RAM by serial interface CSIA0 during the interval period, the interval time specified by automatic data transfer interval specification register 0 (ADTI0) may be extended.

Figure 17-20. Repeat Transmission Mode Flowchart

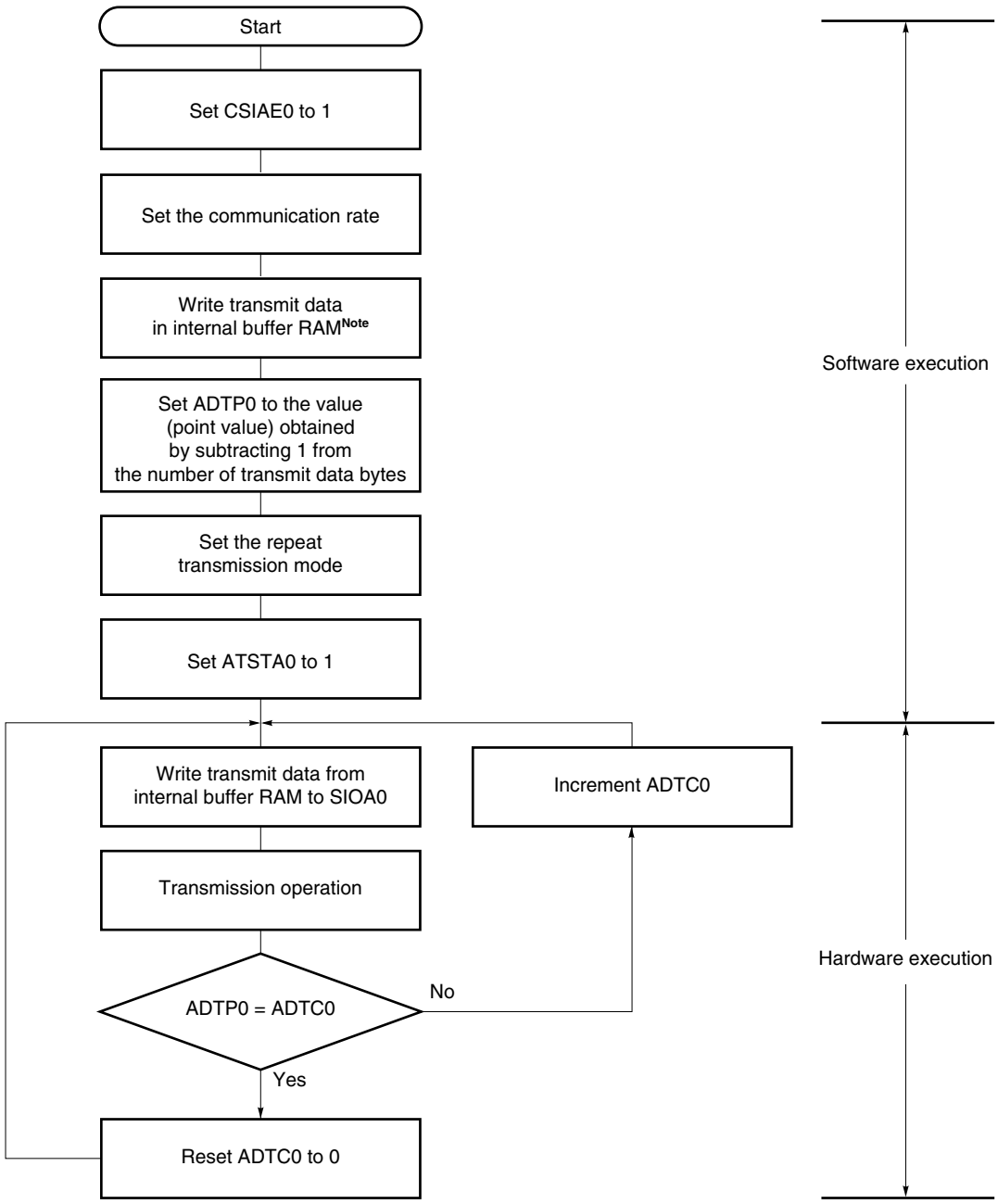

CSIAE0: Bit 7 of serial operation mode specification register 0 (CSIMA0)
ADTP0: Automatic data transfer address point specification register 0
ADTI0: Automatic data transfer interval specification register 0
ATSTA0: Bit 0 of serial trigger register 0 (CSIT0)
SIOA0: Serial I/O shift register 0
ADTC0: Automatic data transfer address count register 0

Note A wait state may be generated when data is written to the buffer RAM. For details, see **CHAPTER 36 CAUTIONS FOR WAIT**.

(d) Data format

Data is changed in synchronization with the $\overline{\text{SCKA0}}$ falling edge as shown below.

The data length is fixed to 8 bits and the data transfer direction can be switched by the specification of bit 1 (DIR0) of serial operation mode specification register 0 (CSIMA0).

Figure 17-21. Format of CSIA0 Transmit/Receive Data

(a) MSB-first (DIR0 bit = 0)

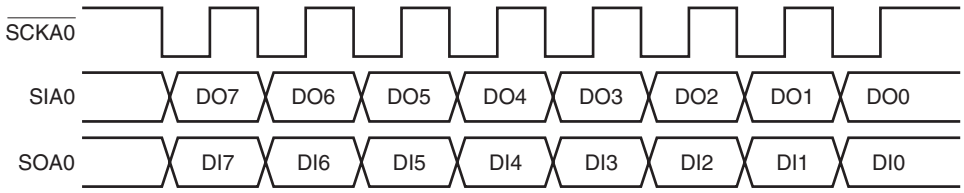

(b) LSB-first (DIR0 bit = 1)

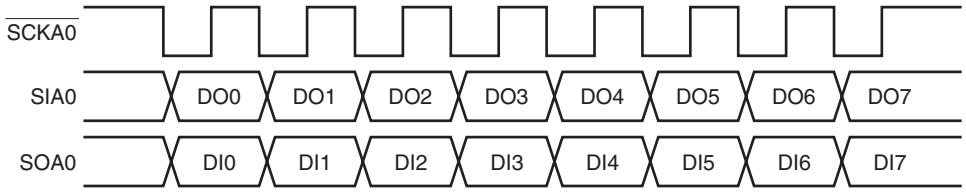

(e) Automatic transmission/reception suspension and restart

Automatic transmission/reception can be temporarily suspended by setting bit 1 (ATSTP0) of serial trigger register 0 (CSIT0) to 1.

During 8-bit data communication, the transmission/reception is not suspended. It is suspended upon completion of 8-bit data communication.

When suspended, bit 0 (TSF0) of serial status register 0 (CSIS0) is cleared to 0 after transfer of the 8th bit.

Cautions 1. If the HALT instruction is executed during automatic transmission/reception, communication is suspended and the HALT mode is set if during 8-bit data communication. When the HALT mode is cleared, automatic transmission/reception is restarted from the suspended point.

2. When suspending automatic transmission/reception, do not change the operating mode to 3-wire serial I/O mode while TSF0 = 1.

Figure 17-22. Automatic Transmission/Reception Suspension and Restart

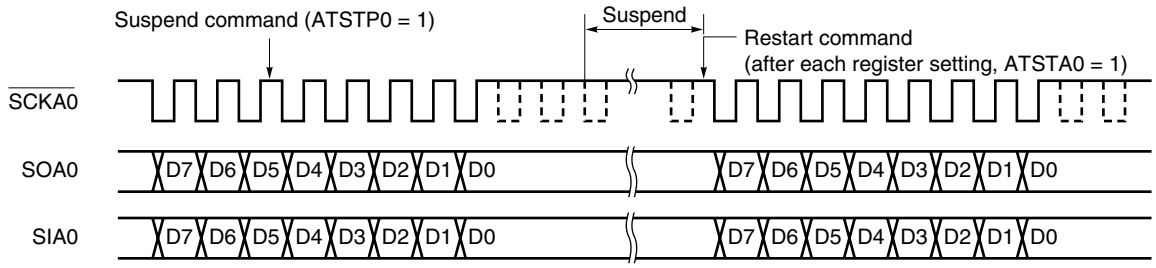

ATSTP0: Bit 1 of serial trigger register 0 (CSIT0)

ATSTA0: Bit 0 of CSIT0

(4) Synchronization control

Busy control and strobe control are functions used to synchronize transmission/reception between the master device and a slave device.

By using these functions, a shift in bits being transmitted or received can be detected.

(a) Busy control option

Busy control is a function to keep the serial transmission/reception by the master device waiting while the busy signal output by a slave device to the master is active.

When using this busy control option, the following conditions must be satisfied.

- Bit 6 (ATE0) of serial operation mode specification register 0 (CSIMA0) is set to 1.
- Bit 4 (BUSYE0) of serial status register 0 (CSIS0) is set to 1.

Figure 17-23 shows the system configuration of the master device and slave device when the busy control option is used.

Figure 17-23. System Configuration When Busy Control Option Is Used

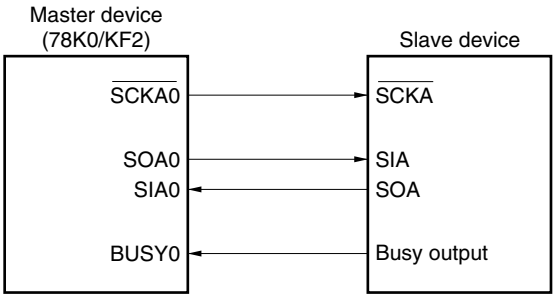

The master device inputs the busy signal output by the slave device to the BUSY0/BUZ/INTP7/P141 pin. The master device samples the input busy signal in synchronization with the falling of the serial clock. Even if the busy signal becomes active while 8-bit data is being transmitted or received, transmission/reception by the master is not kept waiting. If the busy signal is active at the rising edge of the serial clock one clock after completion of transmission/reception of the 8-bit data, the busy input becomes valid. After that, the master transmission/reception is kept waiting while the busy signal is active.

The active level of the busy signal is set by bit 3 (BUSYLV0) of CSIS0.

BUSYLV0 = 1: Active-high
BUSYLV0 = 0: Active-low

When using the busy control option, select the master mode. Control with the busy signal cannot be implemented in the slave mode.

Figure 17-24 shows the example of the operation timing when the busy control option is used.

Caution Busy control cannot be used simultaneously with the interval time control function of automatic data transfer interval specification register 0 (ADTI0).

Figure 17-24. Example of Operation Timing When Busy Control Option Is Used (When BUSYLV0 = 1)

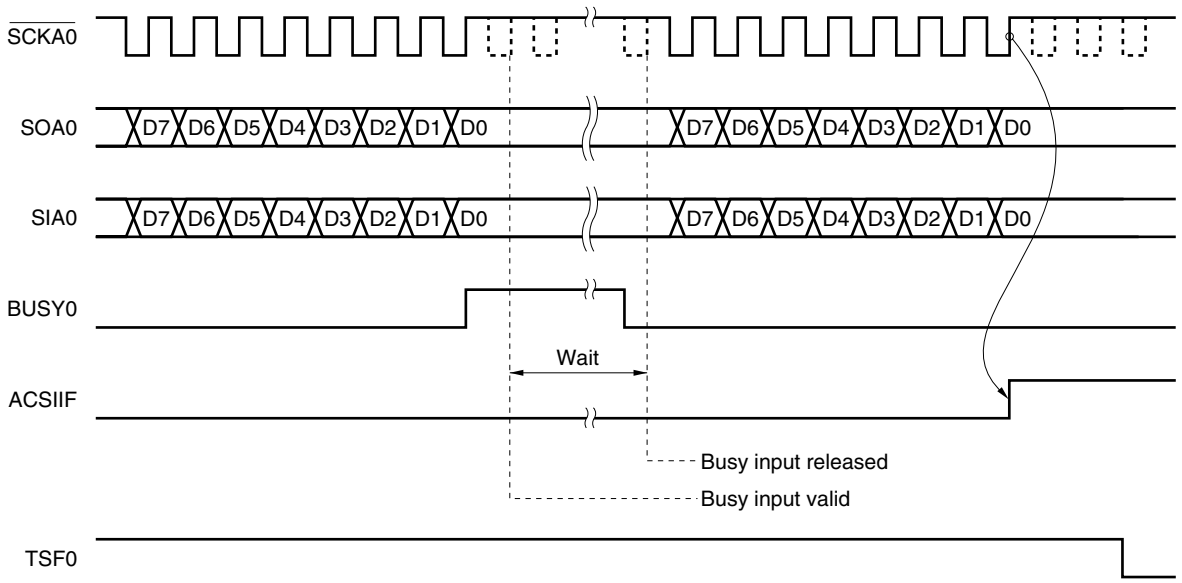

Remark ACSIIF: Interrupt request flag
TSF0: Bit 0 of serial status register 0 (CSIS0)

When the busy signal becomes inactive, waiting is released. If the sampled busy signal is inactive, transmission/reception of the next 8-bit data is started at the falling edge of the next serial clock.

Because the busy signal is asynchronous with the serial clock, it takes up to 1 clock until the busy signal is sampled, even if made inactive by the slave. It takes 0.5 clock until data transfer is started after the busy signal was sampled.

To accurately release the waiting, keep the busy signal inactive at the slave side, until $\overline{\text{SCKA0}}$ falls.

Figure 17-25 shows the example of the timing of the busy signal and releasing the waiting. This figure shows an example in which the busy signal is active as soon as transmission/reception has been started.

Figure 17-25. Busy Signal and Wait Release (When BUSYLV0 = 1)

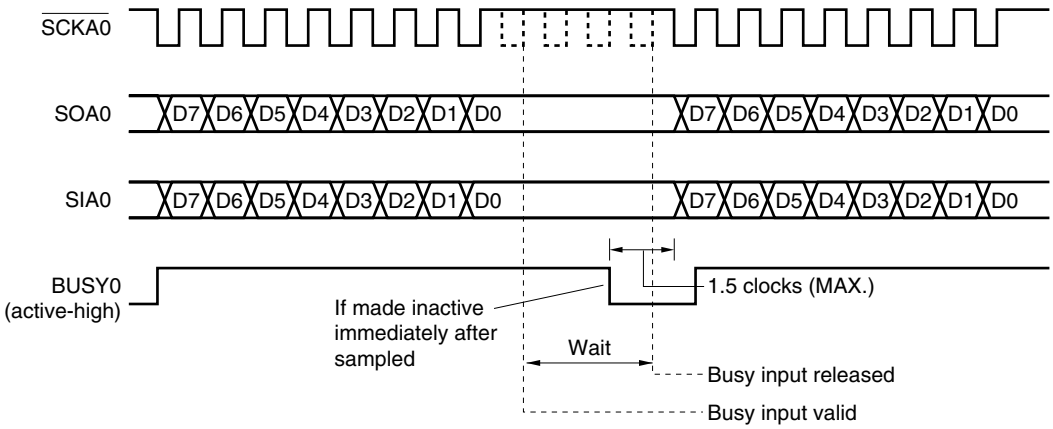

(b) Busy & strobe control option

Strobe control is a function used to synchronize data transmission/reception between the master and slave devices. The master device outputs the strobe signal from the STB0/P145 pin when 8-bit transmission/reception has been completed. By this signal, the slave device can determine the timing of the end of data transmission. Therefore, synchronization is established even if a bit shift occurs because noise is superimposed on the serial clock, and transmission of the next byte is not affected by the bit shift.

To use the strobe control option, the following conditions must be satisfied:

- Bit 6 (ATE0) of the serial operation mode specification register 0 (CSIMA0) is set to 1.
- Bit 5 (STBE0) of serial status register 0 (CSIS0) is set to 1.

Usually, the busy control and strobe control options are simultaneously used as handshake signals. In this case, the strobe signal is output from the STB0/P145 pin, the BUSY0/BUZ/INTP7/P141 pin can be sampled to keep transmission/reception waiting while the busy signal is input.

A high level lasting for one transfer clock is output from the STB0/P145 pin in synchronization with the falling edge of the ninth serial clock as the strobe signal. The busy signal is detected at the rising edge of the serial clock two clocks after 8-bit data transmission/reception completion.

Figure 17-26 shows the example of the operation timing when the busy & strobe control options are used.

When the strobe control option is used, the interrupt request flag (ACSIIF) that is set on completion of transmission/reception is set after the strobe signal is output.

Figure 17-26. Example of Operation Timing When Busy & Strobe Control Options Are Used (When BUSYLV0 = 1)

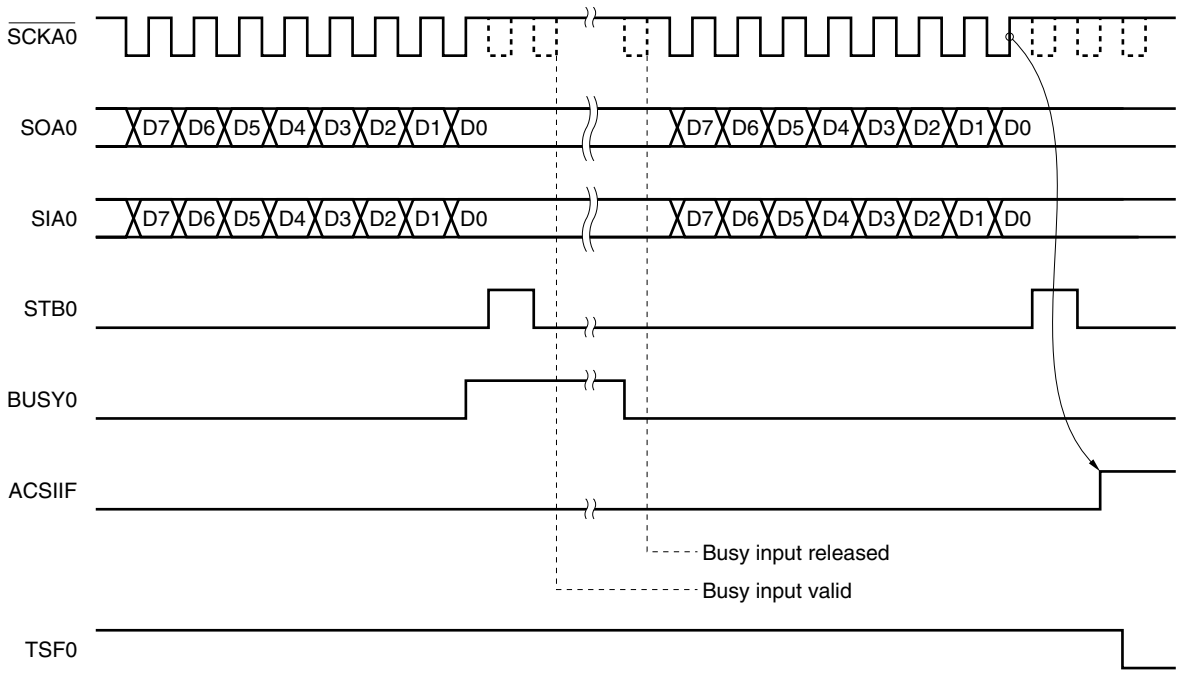

Caution When TSF0 is cleared, the SOA0 pin goes low.

Remark ACSIIF: Interrupt request flag
TSF0: Bit 0 of serial status register 0 (CSIS0)

(c) Bit shift detection by busy signal

During automatic transmission/reception, a bit shift of the serial clock of the slave device may occur because noise is superimposed on the serial clock signal output by the master device. Unless the strobe control option is used at this time, the bit shift affects transmission of the next byte. In this case, the master can detect the bit shift by checking the busy signal during transmission by using the busy control option.

A bit shift is detected by using the busy signal as follows:

The slave outputs the busy signal after the rising of the eighth serial clock during data transmission/reception (to not keep transmission/reception waiting by the busy signal at this time, make the busy signal inactive within 2 clocks).

The master samples the busy signal in synchronization with the falling edge of the serial clock if bit 2 (ERRE0) of serial status register 0 (CSIS0) is set to 1. If a bit shift does not occur, all the eight serial clocks that have been sampled are inactive. If the sampled serial clocks are active, it is assumed that a bit shift has occurred, error processing is executed (by setting bit 1 (ERRF0) of serial status register 0 (CSIS0) to 1, and communication is suspended and an interrupt request signal (INTACSI) is output).

Although communication is suspended after completion of 1-byte data communication, slave signal output, wait due to the busy signal, and wait due to the interval time specified by ADTI0 are not executed.

If ERRE0 = 0, ERRF0 cannot become 1 even if a bit shift occurs.

Figure 17-27 shows the example of the operation timing of the bit shift detection function by the busy signal.

Figure 17-27. Example of Operation Timing of Bit Shift Detection Function by Busy Signal (When BUSYLV0 = 1)

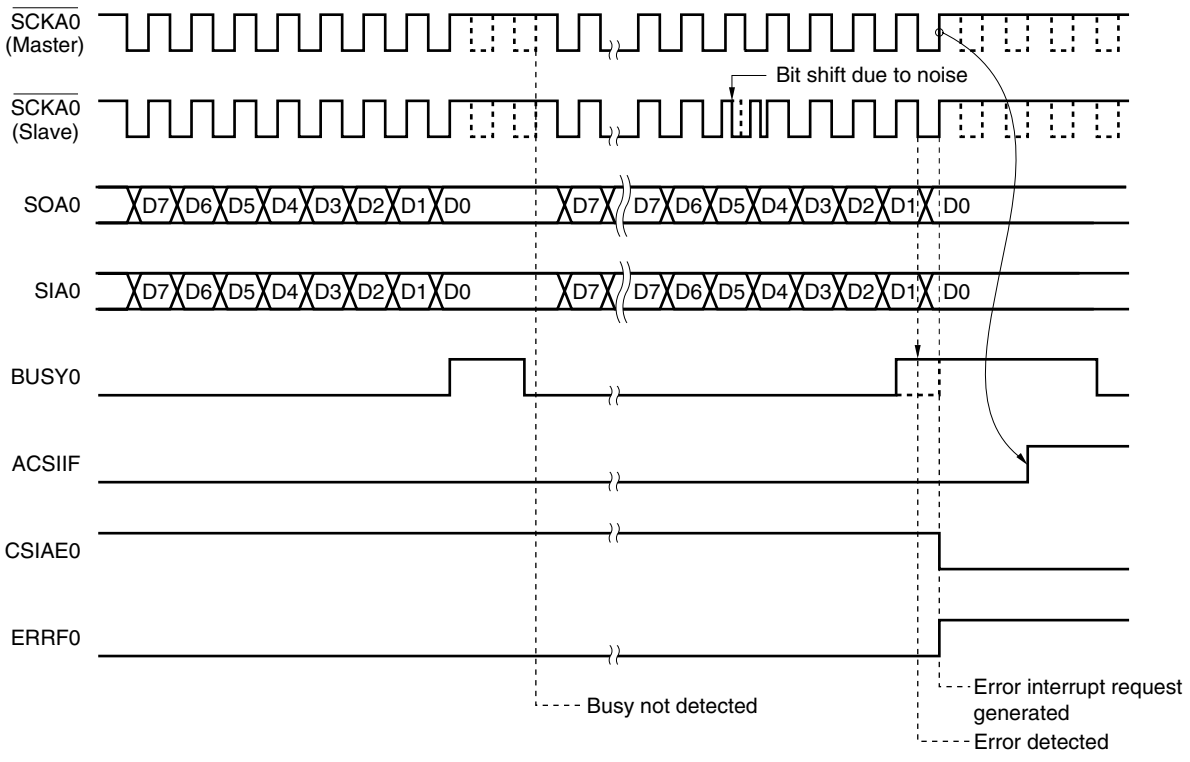

ACSIIF: Interrupt request flag

CSIAE0: Bit 7 of serial operation mode specification register 0 (CSIMA0)

ERRF0: Bit 1 of serial status register 0 (CSIS0)

(5) Automatic transmit/receive interval time

When using the automatic transmit/receive function, the read/write operations from/to the internal buffer RAM are performed after transmitting/receiving one byte. Therefore, an interval is inserted before the next transmit/receive operation.

Since the read/write operations from/to the buffer RAM are performed in parallel with the CPU processing when using the automatic transmit/receive function by the internal clock, the interval depends on the value which is set in automatic data transfer interval specification register 0 (ADTI0) and bits 5 (STBE0) and 4 (BUSYE0) of serial status register 0 (CSIS0).

When ADTI0 is cleared to 00H, an interval time based on the to STBE0 and BUSYE0 settings is inserted. If ADTI0 = 00H and STBE0 = BUSYE0 = 1, for example, then an interval time of two clocks is inserted, and the interval time can be further extended by using an external busy signal. If an interval time of two clocks or more is set by using ADTI0, then the interval time set by ADTI0 is inserted, regardless of the settings of STBE0 and BUSYE0. When BUSYE0 = 1, the interval time can be further extended by an external busy signal.

Example Interval time when ADTI0 = 00H and busy signal is not generated

<1> When STBE0 = 1, BUSYE0 = 0: Interval time of two serial clocks is generated

<2> When STBE0 = 0, BUSYE0 = 1: Interval time of one serial clock is generated

<3> When STBE0 = 1, BUSYE0 = 1: Interval time of two serial clocks is generated

Figure 17-28. Example of Interval Time for Automatic Transmission/Reception (When ADTI0 = 00H, STBE0 = 1, BUSYE0 = 0 (Two Clocks))

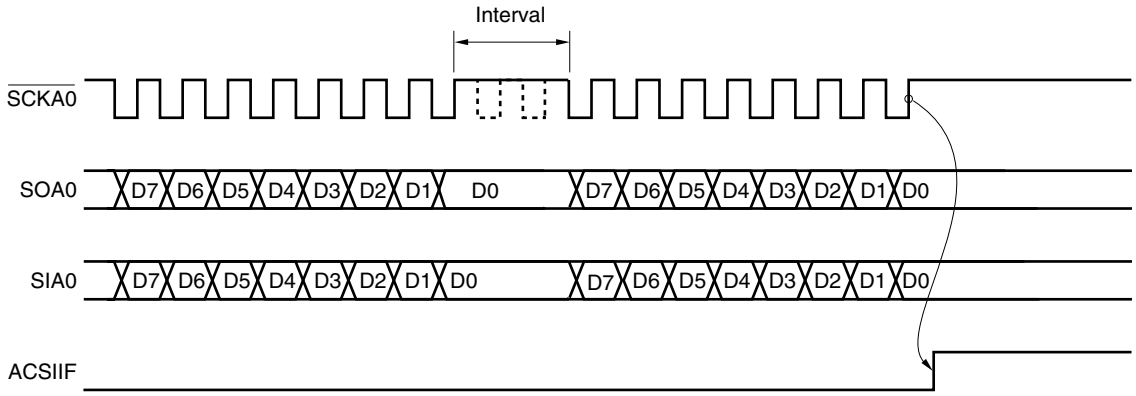

ACSIIF: Interrupt request flag

CHAPTER 18 SERIAL INTERFACE IIC0

Caution Do not use serial interface IIC0 and the multiplier/divider simultaneously, because various flags corresponding to interrupt request sources are shared among serial interface IIC0 and the multiplier/divider.

Remark The multiplier/divider is mounted only onto the 78K0/Kx2 microcontroller products whose flash memory is at least 48 KB.

18.1 Functions of Serial Interface IIC0

Serial interface IIC0 are mounted onto all 78K0/Kx2 microcontroller products.
Serial interface IIC0 has the following two modes.

(1) Operation stop mode

This mode is used when serial transfers are not performed. It can therefore be used to reduce power consumption.

(2) I^2C bus mode (multimaster supported)

This mode is used for 8-bit data transfers with several devices via two lines: a serial clock (SCL0) line and a serial data bus (SDA0) line.

This mode complies with the I^2C bus format and the master device can generated “start condition”, “address”, “transfer direction specification”, “data”, and “stop condition” data to the slave device, via the serial data bus. The slave device automatically detects these received status and data by hardware. This function can simplify the part of application program that controls the I^2C bus.

Since the SCL0 and SDA0 pins are used for open drain outputs, IIC0 requires pull-up resistors for the serial clock line and the serial data bus line.

Figure 18-1 shows a block diagram of serial interface IIC0.

Figure 18-1. Block Diagram of Serial Interface IIC0

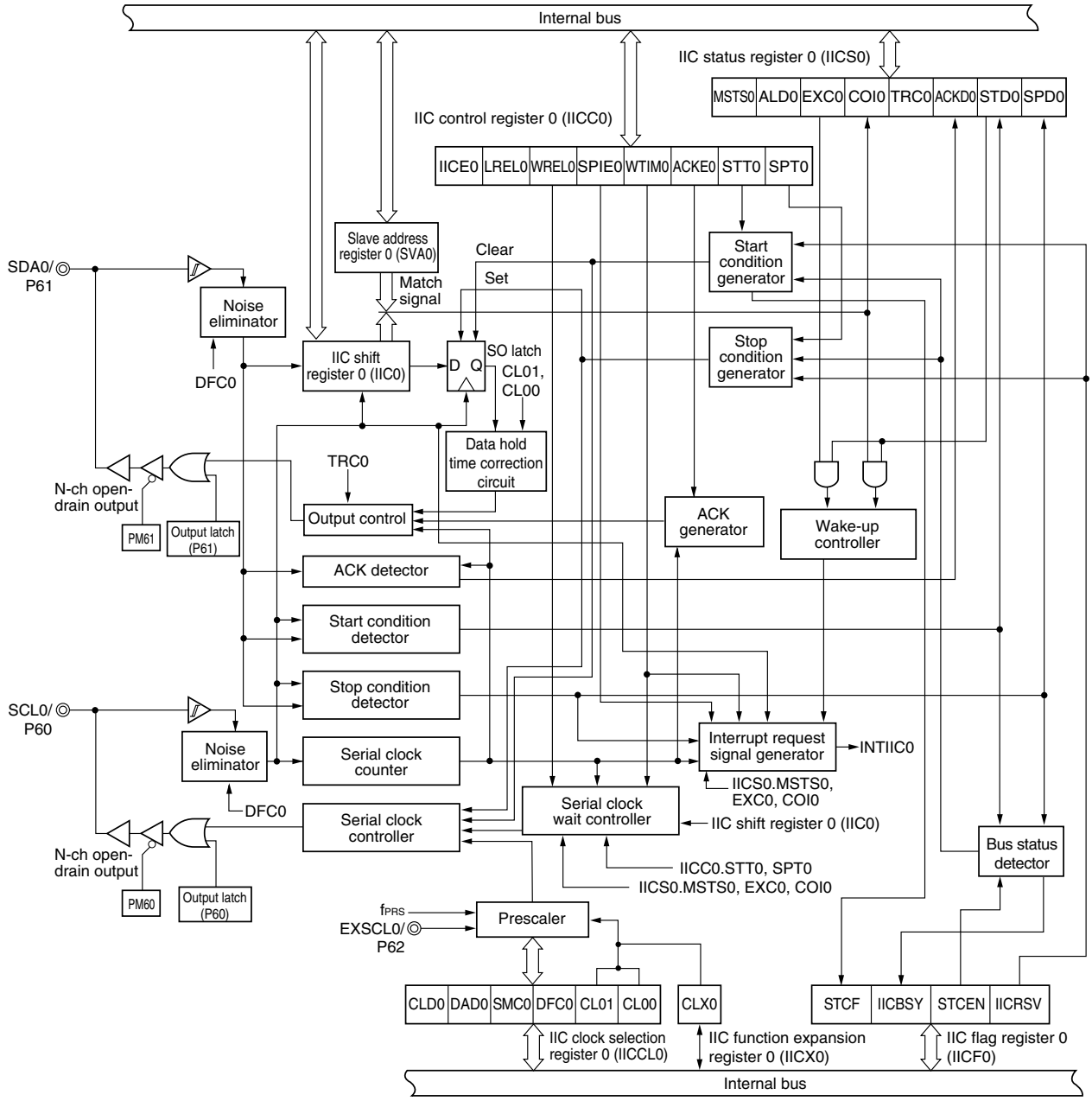

Remark The 78K0/KB2 products are not mounted with the EXSCL0 pin.

Figure 18-2 shows a serial bus configuration example.

Figure 18-2. Serial Bus Configuration Example Using I²C Bus

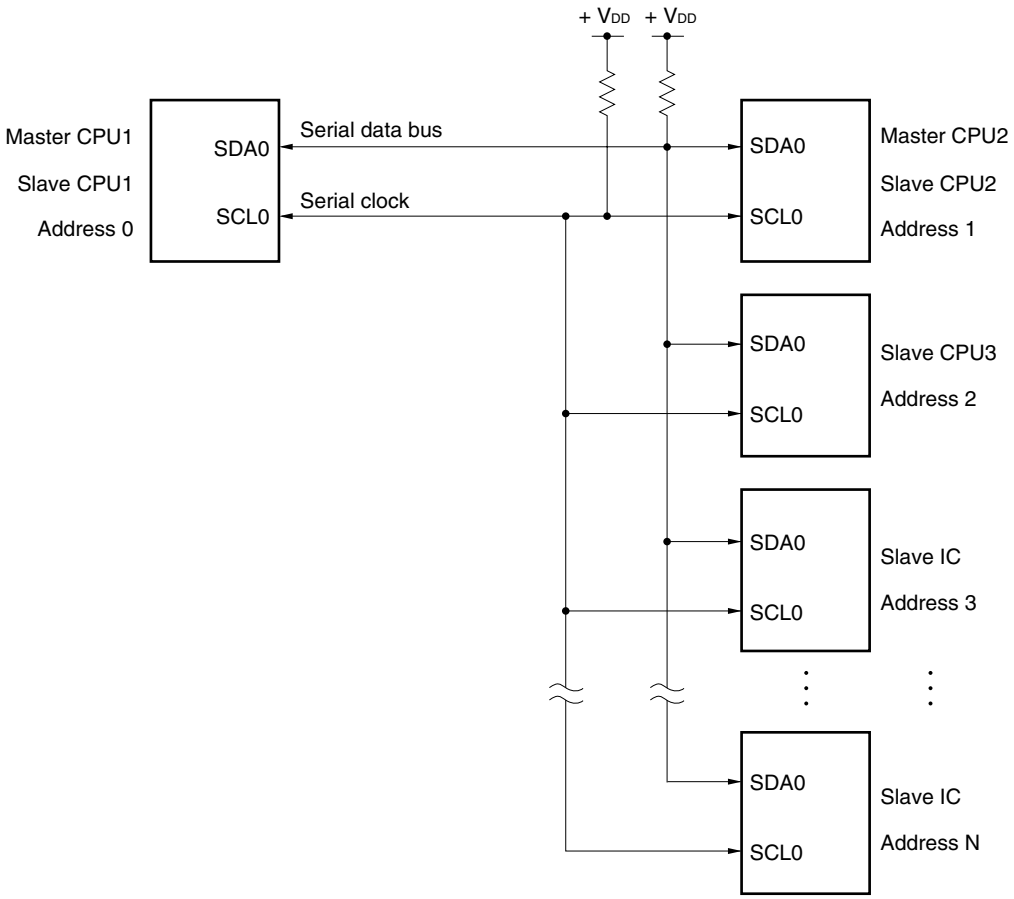

18.2 Configuration of Serial Interface IIC0

Serial interface IIC0 includes the following hardware.

Table 18-1. Configuration of Serial Interface IIC0

Item	Configuration
Registers	IIC shift register 0 (IIC0) Slave address register 0 (SVA0)
Control registers	IIC control register 0 (IICC0) IIC status register 0 (IICS0) IIC flag register 0 (IICF0) IIC clock selection register 0 (IICCL0) IIC function expansion register 0 (IICX0) Port mode register 6 (PM6) Port register 6 (P6)

(1) IIC shift register 0 (IIC0)

IIC0 is used to convert 8-bit serial data to 8-bit parallel data and vice versa in synchronization with the serial clock.

IIC0 can be used for both transmission and reception.

The actual transmit and receive operations can be controlled by writing and reading operations to IIC0.

Cancel the wait state and start data transfer by writing data to IIC0 during the wait period.

IIC0 is set by an 8-bit memory manipulation instruction.

Reset signal generation clears IIC0 to 00H.

Figure 18-3. Format of IIC Shift Register 0 (IIC0)

Address: FFA5H After reset: 00H R/W

Symbol	7	6	5	4	3	2	1	0
IIC0								

Cautions 1. Do not write data to IIC0 during data transfer.

2. Write or read IIC0 only during the wait period. Accessing IIC0 in a communication state other than during the wait period is prohibited. When the device serves as the master, however, IIC0 can be written only once after the communication trigger bit (STT0) is set to 1.

<R> **3. When communication is reserved, write data to the IIC0 register after the interrupt triggered by a stop condition is detected.**

(2) Slave address register 0 (SVA0)

<R> This register stores seven bits of local addresses {A6, A5, A4, A3, A2, A1, A0} when in slave mode.

This register can be set by an 8-bit memory manipulation instruction.

However, rewriting to this register is prohibited while STD0 = 1 (while the start condition is detected).

Reset signal generation clears SVA0 to 00H.

Figure 18-4. Format of Slave Address Register 0 (SVA0)

Address: FFA7H After reset: 00H R/W

Symbol	7	6	5	4	3	2	1	0
SVA0								0Note

Note Bit 0 is fixed to 0.

(3) SO latch

The SO latch is used to retain the SDA0 pin's output level.

(4) Wake-up controller

This circuit generates an interrupt request (INTIIC0) when the address received by this register matches the address value set to slave address register 0 (SVA0) or when an extension code is received.

(5) Prescaler

This selects the sampling clock to be used.

(6) Serial clock counter

This counter counts the serial clocks that are output or input during transmit/receive operations and is used to verify that 8-bit data was transmitted or received.

(7) Interrupt request signal generator

This circuit controls the generation of interrupt request signals (INTIIC0).

An I^2C interrupt request is generated by the following two triggers.

- Falling edge of eighth or ninth clock of the serial clock (set by WTIM0 bit)
- Interrupt request generated when a stop condition is detected (set by SPIE0 bit)

Remark WTIM0 bit: Bit 3 of IIC control register 0 (IICC0)
SPIE0 bit: Bit 4 of IIC control register 0 (IICC0)

(8) Serial clock controller

In master mode, this circuit generates the clock output via the SCL0 pin from a sampling clock.

(9) Serial clock wait controller

This circuit controls the wait timing.

(10) ACK generator, stop condition detector, start condition detector, and ACK detector

These circuits generate and detect each status.

(11) Data hold time correction circuit

This circuit generates the hold time for data corresponding to the falling edge of the serial clock.

(12) Start condition generator

This circuit generates a start condition when the STT0 bit is set to 1.

However, in the communication reservation disabled status (IICRSV bit = 1), when the bus is not released (IICBSY bit = 1), start condition requests are ignored and the STCF bit is set to 1.

(13) Stop condition generator

This circuit generates a stop condition when the SPT0 bit is set to 1.

(14) Bus status detector

This circuit detects whether or not the bus is released by detecting start conditions and stop conditions.

However, as the bus status cannot be detected immediately following operation, the initial status is set by the STCEN bit.

Remark STT0 bit: Bit 1 of IIC control register 0 (IICC0)
SPT0 bit: Bit 0 of IIC control register 0 (IICC0)
IICRSV bit: Bit 0 of IIC flag register 0 (IICF0)
IICBSY bit: Bit 6 of IIC flag register 0 (IICF0)
STCF bit: Bit 7 of IIC flag register 0 (IICF0)
STCEN bit: Bit 1 of IIC flag register 0 (IICF0)

18.3 Registers to Control Serial Interface IIC0

Serial interface IIC0 is controlled by the following seven registers.

- IIC control register 0 (IICC0)
- IIC flag register 0 (IICF0)
- IIC status register 0 (IICS0)
- IIC clock selection register 0 (IICCL0)
- IIC function expansion register 0 (IICX0)
- Port mode register 6 (PM6)
- Port register 6 (P6)

(1) IIC control register 0 (IICC0)

This register is used to enable/stop I^2C operations, set wait timing, and set other I^2C operations.

IICC0 register is set by a 1-bit or 8-bit memory manipulation instruction. However, set the SPIE0, WTIM0, and ACKE0 bits while IICE0 bit = 0 or during the wait period. These bits can be set at the same time when the IICE0 bit is set from “0” to “1”.

Reset signal generation clears IICC0 to 00H.

Figure 18-5. Format of IIC Control Register 0 (IICC0) (1/4)

Address: FFA6H After reset: 00H R/W

Symbol	<7>	<6>	<5>	<4>	<3>	<2>	<1>	<0>
IICC0	IICE0	LREL0	WREL0	SPIE0	WTIM0	ACKE0	STT0	SPT0

IICE0	I^2C operation enable
0	Stop operation. Reset IIC status register 0 (IICS0)[Note 1]. Stop internal operation.
1	Enable operation.
Be sure to set this bit (1) while the SCL0 and SDA0 lines are at high level.	
Condition for clearing (IICE0 = 0)	Condition for setting (IICE0 = 1)
• Cleared by instruction • Reset	• Set by instruction

LREL0[Notes 2, 3]	Exit from communications
0	Normal operation
1	This exits from the current communications and sets standby mode. This setting is automatically cleared to 0 after being executed. Its uses include cases in which a locally irrelevant extension code has been received. The SCL0 and SDA0 lines are set to high impedance. The following flags of IIC control register 0 (IICC0) and IIC status register 0 (IICS0) are cleared to 0. • STT0 • SPT0 • MSTS0 • EXC0 • COI0 • TRC0 • ACKD0 • STD0
The standby mode following exit from communications remains in effect until the following communications entry conditions are met. • After a stop condition is detected, restart is in master mode. • An address match or extension code reception occurs after the start condition.	
Condition for clearing (LREL0 = 0)	Condition for setting (LREL0 = 1)
• Automatically cleared after execution • Reset	• Set by instruction

WREL0[Notes 2, 3]	Wait cancellation
0	Do not cancel wait
1	Cancel wait. This setting is automatically cleared after wait is canceled.
When WREL0 is set (wait canceled) during the wait period at the ninth clock pulse in the transmission status (TRC0 = 1), the SDA0 line goes into the high impedance state (TRC0 = 0).	
Condition for clearing (WREL0 = 0)	Condition for setting (WREL0 = 1)
• Automatically cleared after execution • Reset	• Set by instruction

Notes 1. The IICS0 register, the STCF0 and IICBSY bits of the IICF0 register, and the CLD0 and DAD0 bits of the IICCL0 register are reset.

2. The signals of these bits are invalid while the IICE0 bit is 0.

<R> **3.** When the LREL0 and WREL0 bits are read, 0 is always read.

<R> **Caution If the operation of I^2C is enabled (IICE0 = 1) when the SCL0 line is high level, the SDA0 line is low level, and the digital filter is turned on (DFC0 of the IICCL0 register = 1), a start condition will be inadvertently detected immediately. In this case, set (1) the LREL0 bit by using a 1-bit memory manipulation instruction immediately after enabling operation of I^2C (IICE0 = 1).**

Figure 18-5. Format of IIC Control Register 0 (IICC0) (2/4)

SPIE0[Note 1]	Enable/disable generation of interrupt request when stop condition is detected
0	Disable
1	Enable

Condition for clearing (SPIE0 = 0)	Condition for setting (SPIE0 = 1)
• Cleared by instruction • Reset	• Set by instruction

WTIM0[Note 1]	Control of wait and interrupt request generation
0	Interrupt request is generated at the eighth clock's falling edge. Master mode: After output of eight clocks, clock output is set to low level and wait is set. Slave mode: After input of eight clocks, the clock is set to low level and wait is set for master device.
1	Interrupt request is generated at the ninth clock's falling edge. Master mode: After output of nine clocks, clock output is set to low level and wait is set. Slave mode: After input of nine clocks, the clock is set to low level and wait is set for master device.
An interrupt is generated at the falling edge of the ninth clock during address transfer independently of the setting of this bit. The setting of this bit is valid when the address transfer is completed. When in master mode, a wait is inserted at the falling edge of the ninth clock during address transfers. For a slave device that has received a local address, a wait is inserted at the falling edge of the ninth clock after an acknowledge ($\overline{ACK}$) is issued. However, when the slave device has received an extension code, a wait is inserted at the falling edge of the eighth clock.	

Condition for clearing (WTIM0 = 0)	Condition for setting (WTIM0 = 1)
• Cleared by instruction • Reset	• Set by instruction

ACKE0[Notes 1, 2]	Acknowledgment control
0	Disable acknowledgment.
1	Enable acknowledgment. During the ninth clock period, the SDA0 line is set to low level.

Condition for clearing (ACKE0 = 0)	Condition for setting (ACKE0 = 1)
• Cleared by instruction • Reset	• Set by instruction

Notes 1. This flag's signal is invalid when IICE0 = 0.

2. The set value is invalid during address transfer and if the code is not an extension code.
When the device serves as a slave and the addresses match, an acknowledge is generated regardless of the set value.

<R>

Figure 18-5. Format of IIC Control Register 0 (IICC0) (3/4)

STT0[Note]	Start condition trigger
0	Do not generate a start condition.
1	When bus is released (in standby state, when IICBSY = 0): If this bit is set (1), a start condition is generated (startup as the master). When a third party is communicating: • When communication reservation function is enabled (IICRSV = 0) Functions as the start condition reservation flag. When set to 1, automatically generates a start condition after the bus is released. • When communication reservation function is disabled (IICRSV = 1) Even if this bit is set (1), the STT0 is cleared and the STT0 clear flag (STCF) is set (1). No start condition is generated. In the wait state (when master device): Generates a restart condition after releasing the wait.

Cautions concerning set timing
- For master reception: Cannot be set to 1 during transfer. Can be set to 1 only in the waiting period when ACKE0 has been cleared to 0 and slave has been notified of final reception.
- For master transmission: A start condition cannot be generated normally during the acknowledge period. Set to 1 during the wait period that follows output of the ninth clock.
- Cannot be set to 1 at the same time as stop condition trigger (SPT0).
- Setting the STT0 bit to 1 and then setting it again before it is cleared to 0 is prohibited.

Condition for clearing (STT0 = 0)	Condition for setting (STT0 = 1)
• Cleared by setting SST0 bit to 1 while communication reservation is prohibited. • Cleared by loss in arbitration • Cleared after start condition is generated by master device • Cleared by LREL0 = 1 (exit from communications) • When IICE0 = 0 (operation stop) • Reset	• Set by instruction

Note The signal of this bit is invalid while IICE0 is 0.

Remarks 1. Bit 1 (STT0) becomes 0 when it is read after data setting.

2. IICRSV: Bit 0 of IIC flag register (IICF0)
STCF: Bit 7 of IIC flag register (IICF0)

<R> **Figure 18-5. Format of IIC Control Register 0 (IICC0) (4/4)**

SPT0	Stop condition trigger
0	Stop condition is not generated.
1	Stop condition is generated (termination of master device's transfer).

Cautions concerning set timing
- For master reception: Cannot be set to 1 during transfer. Can be set to 1 only in the waiting period when ACKE0 has been cleared to 0 and slave has been notified of final reception.
- For master transmission: A stop condition cannot be generated normally during the acknowledge period. Therefore, set it during the wait period that follows output of the ninth clock.
- Cannot be set to 1 at the same time as start condition trigger (STT0).
- SPT0 bit can be set to 1 only when in master mode.
- When WTIM0 has been cleared to 0, if SPT0 bit is set to 1 during the wait period that follows output of eight clocks, note that a stop condition will be generated during the high-level period of the ninth clock. WTIM0 should be changed from 0 to 1 during the wait period following the output of eight clocks, and SPT0 bit should be set to 1 during the wait period that follows the output of the ninth clock.
- Setting SPT0 bit to 1 and then setting it again before it is cleared to 0 is prohibited.

Condition for clearing (SPT0 = 0)	Condition for setting (SPT0 = 1)
• Cleared by loss in arbitration • Automatically cleared after stop condition is detected • Cleared by LREL0 = 1 (exit from communications) • When IICE0 = 0 (operation stop) • Reset	• Set by instruction

Caution When bit 3 (TRC0) of the IIC status register 0 (IICS0) is set to 1 (transmission status), bit 5 (WREL0) of the IICC0 register is set to 1 during the ninth clock and wait is canceled, after which the TRC0 bit is cleared (reception status) and the SDA0 line is set to high impedance. Release the wait performed while the TRC bit is 1 (transmission status) by writing to the IIC shift register.

Remark Bit 0 (SPT0) becomes 0 when it is read after data setting.

(2) IIC status register 0 (IICS0)

This register indicates the status of I^2C.

IICS0 is read by a 1-bit or 8-bit memory manipulation instruction only when STT0 = 1 and during the wait period.

Reset signal generation clears IICS0 to 00H.

Caution If data is read from IICS0 register, a wait cycle is generated. Do not read data from IICS0 register when the peripheral hardware clock (f_{PRS}) is stopped. For details, see CHAPTER 36 CAUTIONS FOR WAIT.

Figure 18-6. Format of IIC Status Register 0 (IICS0) (1/3)

Address: FFAAH After reset: 00H R

Symbol	<7>	<6>	<5>	<4>	<3>	<2>	<1>	<0>
IICS0	MSTS0	ALD0	EXC0	COI0	TRC0	ACKD0	STD0	SPD0

MSTS0	Master device status	
0	Slave device status or communication standby status	
1	Master device communication status	
Condition for clearing (MSTS0 = 0)		Condition for setting (MSTS0 = 1)
• When a stop condition is detected • When ALD0 = 1 (arbitration loss) • Cleared by LREL0 = 1 (exit from communications) • When IICE0 changes from 1 to 0 (operation stop) • Reset		• When a start condition is generated

ALD0	Detection of arbitration loss	
0	This status means either that there was no arbitration or that the arbitration result was a “win”.	
1	This status indicates the arbitration result was a “loss”. MSTS0 bit is cleared.	
Condition for clearing (ALD0 = 0)		Condition for setting (ALD0 = 1)
• Automatically cleared after IICS0 register is read[Note] • When IICE0 changes from 1 to 0 (operation stop) • Reset		• When the arbitration result is a “loss”.

EXC0	Detection of extension code reception	
0	Extension code was not received.	
1	Extension code was received.	
Condition for clearing (EXC0 = 0)		Condition for setting (EXC0 = 1)
• When a start condition is detected • When a stop condition is detected • Cleared by LREL0 = 1 (exit from communications) • When IICE0 changes from 1 to 0 (operation stop) • Reset		• When the higher four bits of the received address data is either “0000” or “1111” (set at the rising edge of the eighth clock).

Note This register is also cleared when a 1-bit memory manipulation instruction is executed for bits other than IICS0 register. Therefore, when using the ALD0 bit, read the data of this bit before the data of the other bits.

Remark LREL0: Bit 6 of IIC control register 0 (IICC0)
IICE0: Bit 7 of IIC control register 0 (IICC0)

Figure 18-6. Format of IIC Status Register 0 (IICS0) (2/3)

COI0	Detection of matching addresses
0	Addresses do not match.
1	Addresses match.

Condition for clearing (COI0 = 0)	Condition for setting (COI0 = 1)
• When a start condition is detected • When a stop condition is detected • Cleared by LREL0 = 1 (exit from communications) • When IICE0 changes from 1 to 0 (operation stop) • Reset	• When the received address matches the local address (slave address register 0 (SVA0)) (set at the rising edge of the eighth clock).

TRC0	Detection of transmit/receive status
0	Receive status (other than transmit status). The SDA0 line is set for high impedance.
1	Transmit status. The value in the SO0 latch is enabled for output to the SDA0 line (valid starting at the falling edge of the first byte's ninth clock).

Condition for clearing (TRC0 = 0)	Condition for setting (TRC0 = 1)
<Both master and slave> • When a stop condition is detected • Cleared by LREL0 = 1 (exit from communications) • When the IICE0 bit changes from 1 to 0 (operation stop) • Cleared by WREL0 = 1[Note] (wait cancel) • When the ALD0 bit changes from 0 to 1 (arbitration loss) • Reset • When not used for communication (MSTS0, EXC0, COI0 = 0) <Master> • When "1" is output to the first byte's LSB (transfer direction specification bit) <Slave> • When a start condition is detected • When "0" is input to the first byte's LSB (transfer direction specification bit)	<Master> • When a start condition is generated • When 0 (master transmission) is output to the LSB (transfer direction specification bit) of the first byte (during address transfer) <Slave> • When 1 (slave transmission) is input to the LSB (transfer direction specification bit) of the first byte from the master (during address transfer)

<R>

Note When bit 3 (TRC0) of the IIC status register 0 (IICS0) is set to 1 (transmission status), bit 5 (WREL0) of the IIC control register 0 (IICC0) is set to 1 during the ninth clock and wait is canceled, after which the TRC0 bit is cleared (reception status) and the SDAA0 line is set to high impedance. Release the wait performed while TRC0 bit is 1 (transmission status) by writing to the IIC shift register.

Remark LREL0: Bit 6 of IIC control register 0 (IICC0)
IICE0: Bit 7 of IIC control register 0 (IICC0)

Figure 18-6. Format of IIC Status Register 0 (IICS0) (3/3)

ACKD0	Detection of acknowledge ($\overline{ACK}$)
0	Acknowledge was not detected.
1	Acknowledge was detected.

Condition for clearing (ACKD0 = 0)	Condition for setting (ACKD0 = 1)
• When a stop condition is detected • At the rising edge of the next byte's first clock • Cleared by LREL0 = 1 (exit from communications) • When IICE0 changes from 1 to 0 (operation stop) • Reset	• After the SDA0 line is set to low level at the rising edge of ninth clock of SCL0 line

STD0	Detection of start condition
0	Start condition was not detected.
1	Start condition was detected. This indicates that the address transfer period is in effect.

Condition for clearing (STD0 = 0)	Condition for setting (STD0 = 1)
• When a stop condition is detected • At the rising edge of the next byte's first clock following address transfer • Cleared by LREL0 = 1 (exit from communications) • When IICE0 changes from 1 to 0 (operation stop) • Reset	• When a start condition is detected

SPD0	Detection of stop condition
0	Stop condition was not detected.
1	Stop condition was detected. The master device's communication is terminated and the bus is released.

Condition for clearing (SPD0 = 0)	Condition for setting (SPD0 = 1)
• At the rising edge of the address transfer byte's first clock following setting of this bit and detection of a start condition • When IICE0 changes from 1 to 0 (operation stop) • Reset	• When a stop condition is detected

Remark LREL0: Bit 6 of IIC control register 0 (IICC0)
IICE0: Bit 7 of IIC control register 0 (IICC0)

(3) IIC flag register 0 (IICF0)

This register sets the operation mode of I^2C and indicates the status of the I^2C bus.

This register can be set by a 1-bit or 8-bit memory manipulation instruction. However, the STT0 clear flag (STCF) and I^2C bus status flag (IICBSY) are read-only.

The IICRSV bit can be used to enable/disable the communication reservation function.

The STCEN bit can be used to set the initial value of the IICBSY bit.

The IICRSV and STCEN bits can be written only when the operation of I^2C is disabled (bit 7 (IICE0) of the IIC control register 0 (IICC0) = 0). When operation is enabled, the IICF0 register can be read.

Reset signal generation clears this register to 00H.

Figure 18-7. Format of IIC Flag Register 0 (IICF0)

Address: FFABH After reset: 00H R/W[Note]

Symbol	<7>	<6>	5	4	3	2	<1>	<0>
IICF0	STCF	IICBSY	0	0	0	0	STCEN	IICRSV

STCF	STT0 clear flag
0	Generate start condition
1	Start condition generation unsuccessful: clear STT0 flag

Condition for clearing (STCF = 0)	Condition for setting (STCF = 1)
• Cleared by STT0 = 1 • When IICE0 = 0 (operation stop) • Reset	• Generating start condition unsuccessful and STT0 bit cleared to 0 when communication reservation is disabled (IICRSV = 1).

IICBSY	I^2C bus status flag
0	Bus release status (communication initial status when STCEN = 1)
1	Bus communication status (communication initial status when STCEN = 0)

Condition for clearing (IICBSY = 0)	Condition for setting (IICBSY = 1)
• Detection of stop condition • When IICE0 = 0 (operation stop) • Reset	• Detection of start condition • Setting of IICE0 bit when STCEN = 0

STCEN	Initial start enable trigger
0	After operation is enabled (IICE0 = 1), enable generation of a start condition upon detection of a stop condition.
1	After operation is enabled (IICE0 = 1), enable generation of a start condition without detecting a stop condition.

Condition for clearing (STCEN = 0)	Condition for setting (STCEN = 1)
• Detection of start condition • Reset	• Set by instruction

IICRSV	Communication reservation function disable bit
0	Enable communication reservation
1	Disable communication reservation

Condition for clearing (IICRSV = 0)	Condition for setting (IICRSV = 1)
• Cleared by instruction • Reset	• Set by instruction

Note Bits 6 and 7 are read-only.

Cautions 1. Write to STCEN bit only when the operation is stopped (IICE0 = 0).

2. As the bus release status (IICBSY = 0) is recognized regardless of the actual bus status when STCEN = 1, when generating the first start condition (STT0 = 1), it is necessary to verify that no third party communications are in progress in order to prevent such communications from being destroyed.

3. Write to IICRSV bit only when the operation is stopped (IICE0 = 0).

Remark STT0: Bit 1 of IIC control register 0 (IICC0)
IICE0: Bit 7 of IIC control register 0 (IICC0)

(4) IIC clock selection register 0 (IICCL0)

This register is used to set the transfer clock for the I^2C bus.

IICCL0 is set by a 1-bit or 8-bit memory manipulation instruction. However, the CLD0 and DAD0 bits are read-only.

The SMC0, CL01, and CL00 bits are set in combination with bit 0 (CLX0) of IIC function expansion register 0 (IICX0) (see **18.3 (6) I^2C transfer clock setting method**).

Set IICCL0 while bit 7 (IICE0) of IIC control register 0 (IICC0) is 0.

Reset signal generation clears IICCL0 to 00H.

Figure 18-8. Format of IIC Clock Selection Register 0 (IICCL0)

Address: FFA8H After reset: 00H R/W[Note]

Symbol	7	6	<5>	<4>	<3>	<2>	1	0
IICCL0	0	0	CLD0	DAD0	SMC0	DFC0	CL01	CL00

CLD0	Detection of SCL0 pin level (valid only when IICE0 = 1)
0	The SCL0 pin was detected at low level.
1	The SCL0 pin was detected at high level.

Condition for clearing (CLD0 = 0)	Condition for setting (CLD0 = 1)
• When the SCL0 pin is at low level • When IICE0 = 0 (operation stop) • Reset	• When the SCL0 pin is at high level

DAD0	Detection of SDA0 pin level (valid only when IICE0 = 1)
0	The SDA0 pin was detected at low level.
1	The SDA0 pin was detected at high level.

Condition for clearing (DAD0 = 0)	Condition for setting (DAD0 = 1)
• When the SDA0 pin is at low level • When IICE0 = 0 (operation stop) • Reset	• When the SDA0 pin is at high level

SMC0	Operation mode switching
0	Operates in standard mode.
1	Operates in high-speed mode.

DFC0	Digital filter operation control
0	Digital filter off.
1	Digital filter on.
Digital filter can be used only in high-speed mode. In high-speed mode, the transfer clock does not vary regardless of DFC0 bit set (1)/clear (0). The digital filter is used for noise elimination in high-speed mode.	

Note Bits 4 and 5 are read-only.

Remark IICE0: Bit 7 of IIC control register 0 (IICC0)

(5) IIC function expansion register 0 (IICX0)

This register sets the function expansion of I^2C.

IICX0 is set by a 1-bit or 8-bit memory manipulation instruction. The CLX0 bit is set in combination with bits 3, 1, and 0 (SMC0, CL01, and CL00) of IIC clock selection register 0 (IICCL0) (see **18.3 (6) I^2C transfer clock setting method**).

Set IICX0 while bit 7 (IICE0) of IIC control register 0 (IICC0) is 0.

Reset signal generation clears IICX0 to 00H.

Figure 18-9. Format of IIC Function Expansion Register 0 (IICX0)

Address: FFA9H After reset: 00H R/W

Symbol	7	6	5	4	3	2	1	<0>
IICX0	0	0	0	0	0	0	0	CLX0

(6) I^2C transfer clock setting method

The I^2C transfer clock frequency (f_{SCL}) is calculated using the following expression.

$$f_{SCL} = 1/(m \times T + t_R + t_F)$$

m = 12, 18, 24, 44, 66, 86 (see **Table 18-2 Selection Clock Setting**)

T: $1/f_W$

t_R: SCL0 rise time

t_F: SCL0 fall time

For example, the I^2C transfer clock frequency (f_{SCL}) when $f_W = f_{PRS}/2 = 4.19$ MHz, m = 86, $t_R = 200$ ns, and $t_F = 50$ ns is calculated using following expression.

$$f_{SCL} = 1/(88 \times 238.7 \text{ ns} + 200 \text{ ns} + 50 \text{ ns}) \cong 48.1 \text{ kHz}$$

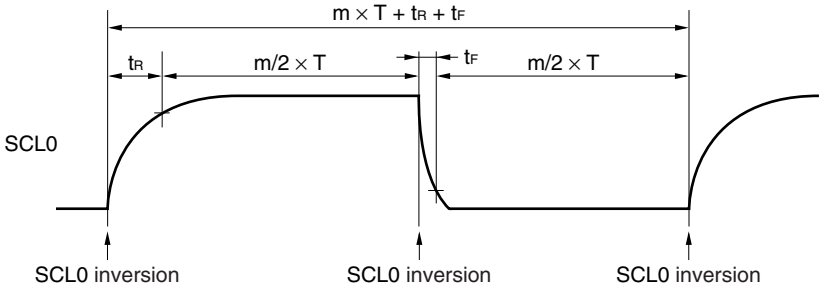

The selection clock is set using a combination of bits 3, 1, and 0 (SMC0, CL01, and CL00) of IIC clock selection register 0 (IICCL0) and bit 0 (CLX0) of IIC function expansion register 0 (IICX0).

Table 18-2. Selection Clock Setting

IICX0	IICCL0			Selection Clock (f_W)[Notes 1, 2]	Transfer Clock (f_W/m)	Settable Selection Clock (f_W) Range	Operation Mode
Bit 0	Bit 3	Bit 1	Bit 0				
CLX0	SMC0	CL01	CL00				
0	0	0	0	f_{PRS}/2	f_W/44	2.00 to 4.19 MHz	Normal mode (SMC0 bit = 0)
0	0	0	1	f_{PRS}/2	f_W/86	4.19 to 8.38 MHz	
0	0	1	0	f_{PRS}/4	f_W/86		
0	0	1	1	f_{EXSCL0}[Notes 3, 4]	f_W/66	6.4 MHz	
0	1	0	×	f_{PRS}/2	f_W/24	4.00 to 8.38 MHz	High-speed mode (SMC0 bit = 1)
0	1	1	0	f_{PRS}/4	f_W/24		
0	1	1	1	f_{EXSCL0}[Note 3, 4]	f_W/18	6.4 MHz	
1	0	×	×	Setting prohibited			
1	1	0	×	f_{PRS}/2	f_W/12	4.00 to 4.19 MHz	High-speed mode (SMC0 bit = 1)
1	1	1	0	f_{PRS}/4	f_W/12		
1	1	1	1	Setting prohibited			

Notes 1. The frequency that can be used for the peripheral hardware clock (f_{PRS}) differs depending on the power supply voltage and product specifications.

Supply Voltage	Conventional-specification Products (μPD78F05xx and 78F05xxD)	Expanded-specification Products (μPD78F05xxA and 78F05xxDA)
4.0 V ≤ V_{DD} ≤ 5.5 V	f_{PRS} ≤ 20 MHz	f_{PRS} ≤ 20 MHz
2.7 V ≤ V_{DD} < 4.0 V	f_{PRS} ≤ 10 MHz	
1.8 V ≤ V_{DD} < 2.7 V (Standard products and (A) grade products only)	f_{PRS} ≤ 5 MHz	f_{PRS} ≤ 5 MHz

(The values shown in the table above are those when f_{PRS} = f_{XH} (XSEL = 1).)

2. If the peripheral hardware clock (f_{PRS}) operates on the internal high-speed oscillation clock (f_{XH}) (XSEL = 0), set CLX0, SMC0, CL01 and CL00 as follows.

IICX0	IICCL0			Selection Clock (f_W)	Transfer Clock (f_W/m)	Settable Selection Clock (f_W) Range	Operation Mode
Bit 0	Bit 3	Bit 1	Bit 0				
CLX0	SMC0	CL01	CL00				
0	0	0	0	f_{PRS}/2	f_W/44	3.8 MHz to 4.2 MHz	Normal mode (SMC0 bit = 0)
0	1	0	×	f_{PRS}/2	f_W/24		High-speed mode (SMC0 bit = 1)

3. This must not be set, because the 78K0/KB2 products are not mounted with the EXSCL0 pin.

4. Do not start communication with the external clock from the EXSCL0 pin when the internal high-speed oscillation clock and high-speed system clock are stopped while the CPU operates with the subsystem clock, or when in the STOP mode.

Caution Determine the transfer clock frequency of I^2C by using CLX0, SMC0, CL01, and CL00 before enabling the operation (by setting bit 7 (IICE0) of IIC control register 0 (IICC0) to 1). To change the transfer clock frequency, clear IICE0 once to 0.

Remarks 1. ×: don't care

2. f_{PRS}: Peripheral hardware clock frequency

3. f_{EXSCL0}: External clock frequency from EXSCL0 pin

(7) Port mode register 6 (PM6)

This register sets the input/output of port 6 in 1-bit units.

When using the P60/SCL0 pin as clock I/O and the P61/SDA0 pin as serial data I/O, clear PM60 and PM61, and the output latches of P60 and P61 to 0.

Set IICE0 (bit 7 of IIC control register 0 (IICC0)) to 1 before setting the output mode because the P60/SCL0 and P61/SDA0 pins output a low level (fixed) when IICE0 is 0.

PM6 is set by a 1-bit or 8-bit memory manipulation instruction.

Reset signal generation sets PM6 to FFH.

Figure 18-10. Format of Port Mode Register 6 (PM6)

Address: FF26H After reset: FFH R/W

Symbol	7	6	5	4	3	2	1	0
PM6	PM67	PM66	PM65	PM64	PM63	PM62	PM61	PM60

PM6n	P6n pin I/O mode selection (n = 0 to 7)
0	Output mode (output buffer on)
1	Input mode (output buffer off)

Remark The figure shown above presents the format of port mode register 6 of 78K0/KF2 products. For the format of port mode register 6 of other products, see **(1) Port mode registers (PMxx)** in **5.3 Registers Controlling Port Function**.

18.4 I^2C Bus Mode Functions

18.4.1 Pin configuration

The serial clock pin (SCL0) and serial data bus pin (SDA0) are configured as follows.

(1) SCL0..... This pin is used for serial clock input and output.
This pin is an N-ch open-drain output for both master and slave devices. Input is Schmitt input.

(2) SDA0 ..... This pin is used for serial data input and output.
This pin is an N-ch open-drain output for both master and slave devices. Input is Schmitt input.

Since outputs from the serial clock line and the serial data bus line are N-ch open-drain outputs, an external pull-up resistor is required.

Figure 18-11. Pin Configuration Diagram

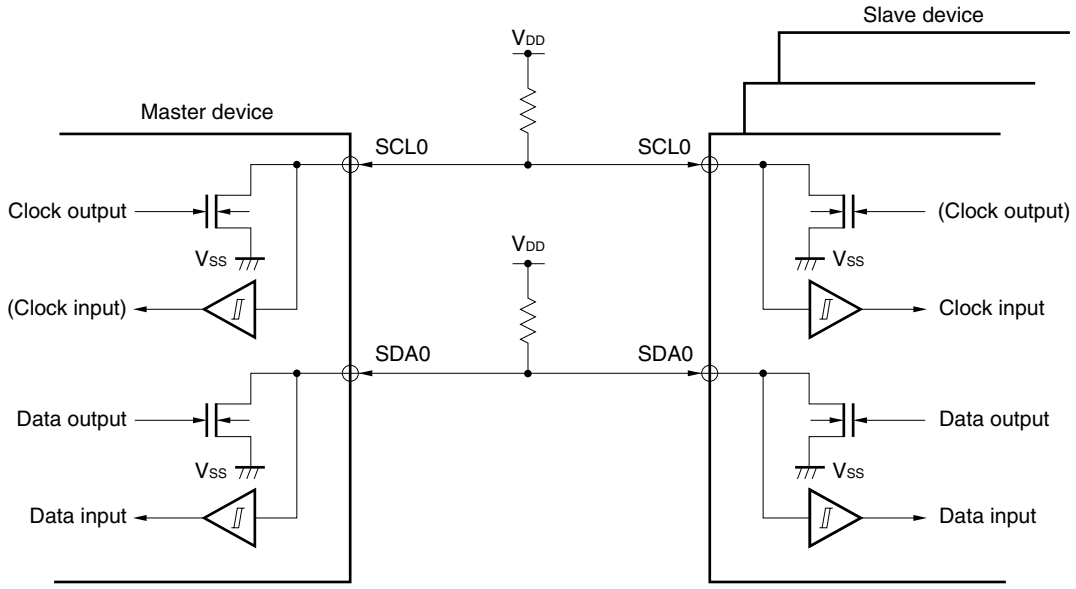

18.5 I^2C Bus Definitions and Control Methods

The following section describes the I^2C bus's serial data communication format and the signals used by the I^2C bus. Figure 18-12 shows the transfer timing for the "start condition", "address", "data", and "stop condition" output via the I^2C bus's serial data bus.

Figure 18-12. I^2C Bus Serial Data Transfer Timing

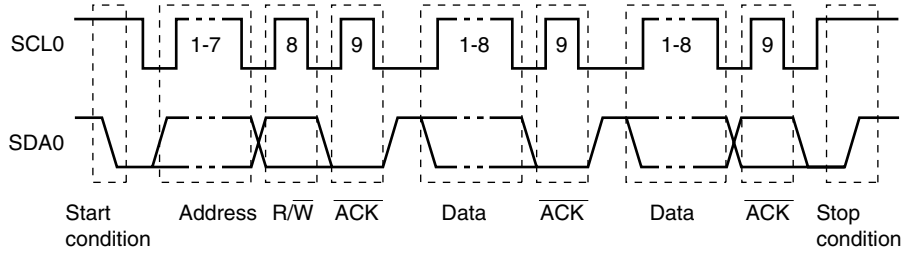

The master device generates the start condition, slave address, and stop condition.
The acknowledge ($\overline{ACK}$) can be generated by either the master or slave device (normally, it is output by the device that receives 8-bit data).

The serial clock (SCL0) is continuously output by the master device. However, in the slave device, the SCL0's low level period can be extended and a wait can be inserted.

18.5.1 Start conditions

A start condition is met when the SCL0 pin is at high level and the SDA0 pin changes from high level to low level. The start conditions for the SCL0 pin and SDA0 pin are signals that the master device generates to the slave device when starting a serial transfer. When the device is used as a slave, start conditions can be detected.

Figure 18-13. Start Conditions

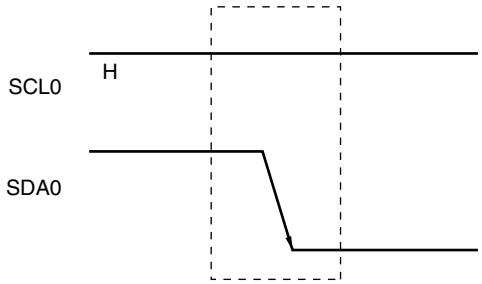

A start condition is output when bit 1 (STT0) of IIC control register 0 (IICC0) is set (to 1) after a stop condition has been detected (SPD0: Bit 0 = 1 in IIC status register 0 (IICS0)). When a start condition is detected, bit 1 (STD0) of IICS0 is set (to 1).

18.5.2 Addresses

The address is defined by the 7 bits of data that follow the start condition.

An address is a 7-bit data segment that is output in order to select one of the slave devices that are connected to the master device via the bus lines. Therefore, each slave device connected via the bus lines must have a unique address.

The slave devices include hardware that detects the start condition and checks whether or not the 7-bit address data matches the data values stored in slave address register 0 (SVA0). If the address data matches the SVA0 register values, the slave device is selected and communicates with the master device until the master device generates a start condition or stop condition.

Figure 18-14. Address

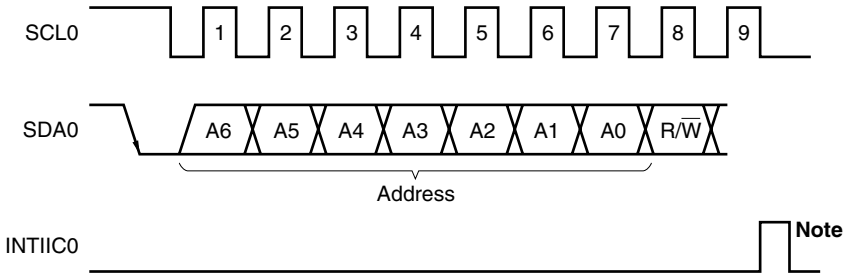

Note INTIIC0 is not issued if data other than a local address or extension code is received during slave device operation.

The slave address and the eighth bit, which specifies the transfer direction as described in **18.5.3 Transfer direction specification** below, are together written to IIC shift register 0 (IIC0) and are then output. Received addresses are written to IIC0.

The slave address is assigned to the higher 7 bits of IIC0 register.

18.5.3 Transfer direction specification

In addition to the 7-bit address data, the master device sends 1 bit that specifies the transfer direction.

When this transfer direction specification bit has a value of “0”, it indicates that the master device is transmitting data to a slave device. When the transfer direction specification bit has a value of “1”, it indicates that the master device is receiving data from a slave device.

Figure 18-15. Transfer Direction Specification

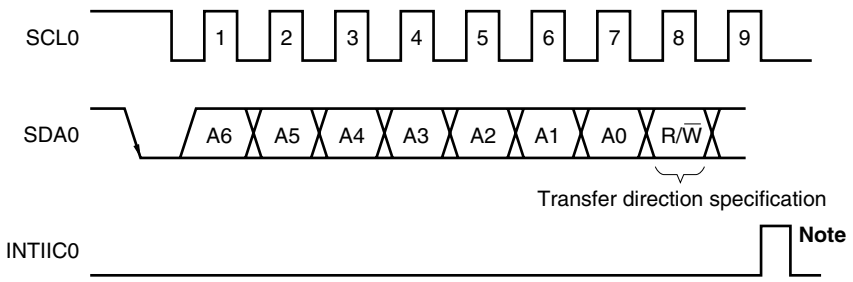

Note INTIIC0 is not issued if data other than a local address or extension code is received during slave device operation.

18.5.4 Acknowledge ($\overline{\text{ACK}}$)

$\overline{\text{ACK}}$ is used to check the status of serial data at the transmission and reception sides.

The reception side returns $\overline{\text{ACK}}$ each time it has received 8-bit data.

The transmission side usually receives $\overline{\text{ACK}}$ after transmitting 8-bit data. When $\overline{\text{ACK}}$ is returned from the reception side, it is assumed that reception has been correctly performed and processing is continued. Whether $\overline{\text{ACK}}$ has been detected can be checked by using bit 2 (ACKD0) of IIC status register 0 (IICS0).

When the master receives the last data item, it does not return $\overline{\text{ACK}}$ and instead generates a stop condition. If a slave does not return $\overline{\text{ACK}}$ after receiving data, the master outputs a stop condition or restart condition and stops transmission. If $\overline{\text{ACK}}$ is not returned, the possible causes are as follows.

<1> Reception was not performed normally.
<2> The final data item was received.
<3> The reception side specified by the address does not exist.

To generate $\overline{\text{ACK}}$, the reception side makes the SDA0 line low at the ninth clock (indicating normal reception).

Automatic generation of $\overline{\text{ACK}}$ is enabled by setting bit 2 (ACKE0) of IIC control register 0 (IICC0) to 1. Bit 3 (TRC0) of the IICS0 register is set by the data of the eighth bit that follows 7-bit address information. Usually, set ACKE0 bit to 1 for reception (TRC0 = 0).

If a slave can receive no more data during reception (TRC0 = 0) or does not require the next data item, then the slave must inform the master, by clearing ACKE0 bit to 0, that it will not receive any more data.

When the master does not require the next data item during reception (TRC0 = 0), it must clear ACKE0 bit to 0 so that $\overline{\text{ACK}}$ is not generated. In this way, the master informs a slave at the transmission side that it does not require any more data (transmission will be stopped).

Figure 18-16. $\overline{\text{ACK}}$

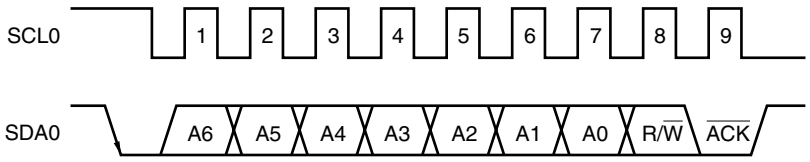

When the local address is received, $\overline{\text{ACK}}$ is automatically generated, regardless of the value of ACKE0 bit. When an address other than that of the local address is received, $\overline{\text{ACK}}$ is not generated (NACK).

When an extension code is received, $\overline{\text{ACK}}$ is generated if ACKE0 bit is set to 1 in advance.

How $\overline{\text{ACK}}$ is generated when data is received differs as follows depending on the setting of the wait timing.

- When 8-clock wait state is selected (bit 3 (WTIM0) of IICC0 register = 0):
  By setting ACKE0 bit to 1 before releasing the wait state, $\overline{\text{ACK}}$ is generated at the falling edge of the eighth clock of the SCL0 pin.
- When 9-clock wait state is selected (bit 3 (WTIM0) of IICC0 register = 1):
  $\overline{\text{ACK}}$ is generated by setting ACKE0 bit to 1 in advance.

18.5.5 Stop condition

When the SCL0 pin is at high level, changing the SDA0 pin from low level to high level generates a stop condition.

A stop condition is a signal that the master device generates to the slave device when serial transfer has been completed. When the device is used as a slave, stop conditions can be detected.

Figure 18-17. Stop Condition

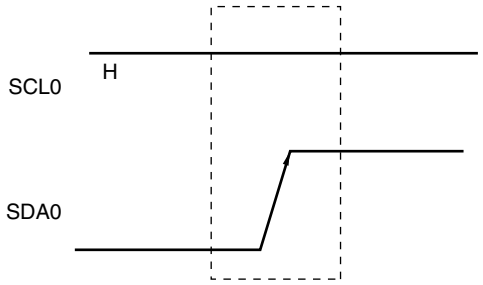

A stop condition is generated when bit 0 (SPT0) of IIC control register 0 (IICC0) is set to 1. When the stop condition is detected, bit 0 (SPD0) of IIC status register 0 (IICS0) is set to 1 and INTIIC0 is generated when bit 4 (SPIE0) of IICC0 register is set to 1.

18.5.6 Wait

The wait is used to notify the communication partner that a device (master or slave) is preparing to transmit or receive data (i.e., is in a wait state).

Setting the SCL0 pin to low level notifies the communication partner of the wait state. When wait state has been canceled for both the master and slave devices, the next data transfer can begin.

Figure 18-18. Wait (1/2)

(1) When master device has a nine-clock wait and slave device has an eight-clock wait (master transmits, slave receives, and ACKE0 = 1)

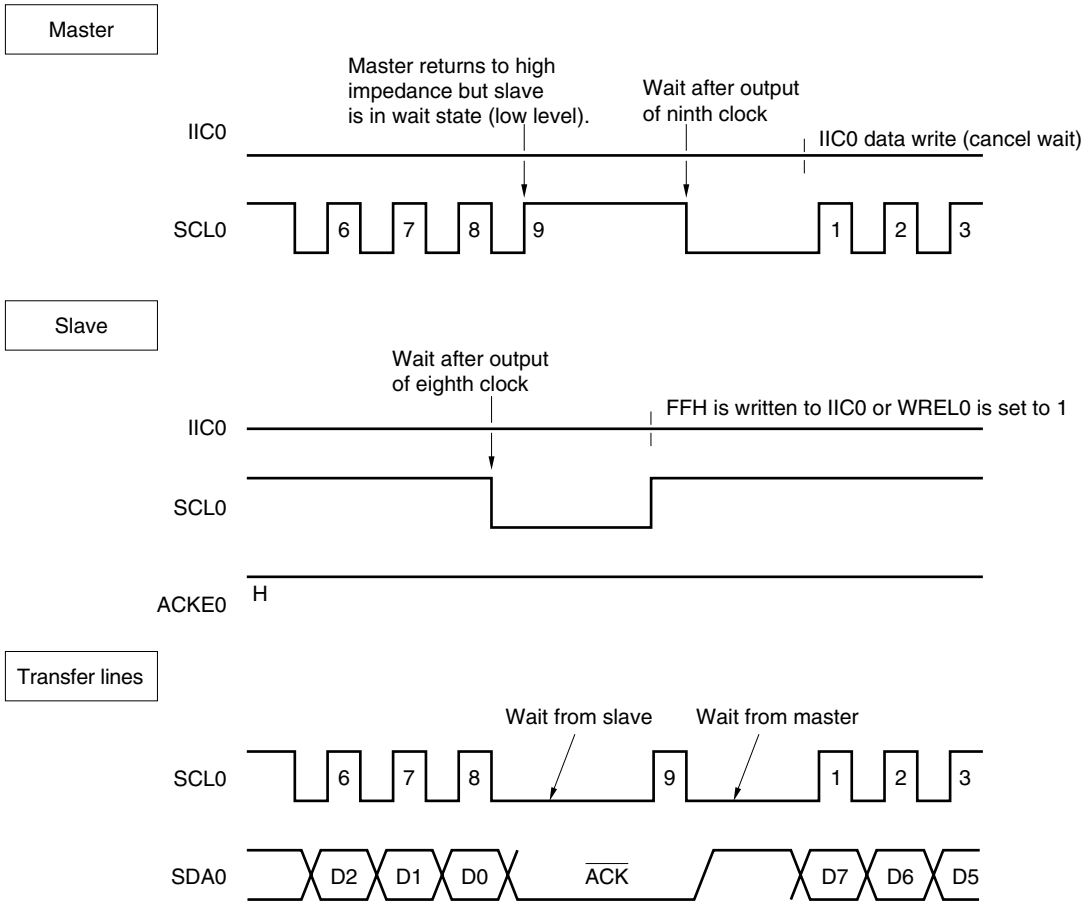

Figure 18-18. Wait (2/2)

(2) When master and slave devices both have a nine-clock wait (master transmits, slave receives, and ACKE0 = 1)

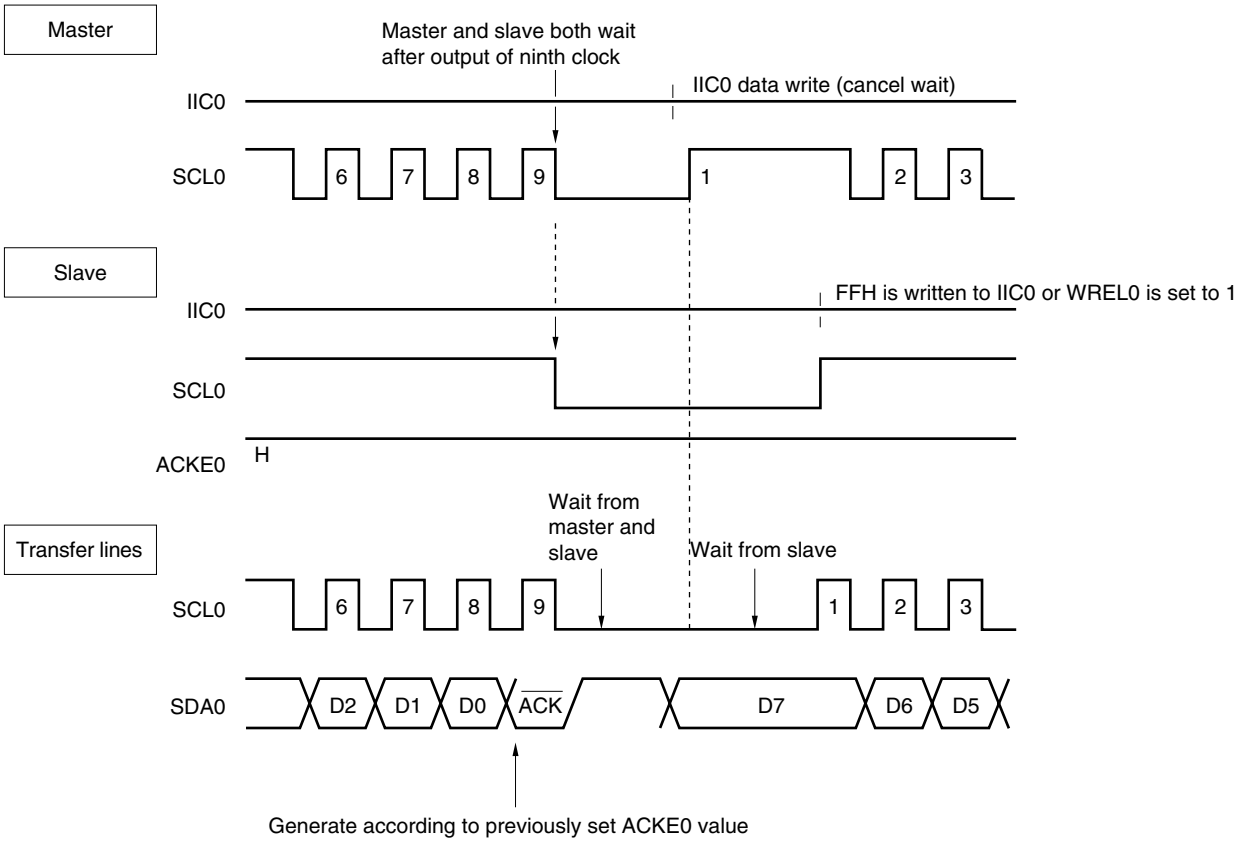

Remark ACKE0: Bit 2 of IIC control register 0 (IICC0)
WREL0: Bit 5 of IIC control register 0 (IICC0)

A wait may be automatically generated depending on the setting of bit 3 (WTIM0) of IIC control register 0 (IICC0).

Normally, the receiving side cancels the wait state when bit 5 (WREL0) of IICC0 register is set to 1 or when FFH is written to IIC shift register 0 (IIC0), and the transmitting side cancels the wait state when data is written to IIC0 register.

The master device can also cancel the wait state via either of the following methods.

- By setting bit 1 (STT0) of IICC0 register to 1
- By setting bit 0 (SPT0) of IICC0 register to 1

18.5.7 Canceling wait

The I^2C usually cancels a wait state by the following processing.

- Writing data to IIC shift register 0 (IIC0)
- Setting bit 5 (WREL0) of IIC control register 0 (IICC0) (canceling wait)
- Setting bit 1 (STT0) of IIC0 register (generating start condition)[Note]
- Setting bit 0 (SPT0) of IIC0 register (generating stop condition)[Note]

Note Master only

When the above wait canceling processing is executed, the I^2C cancels the wait state and communication is resumed.

To cancel a wait state and transmit data (including addresses), write the data to IIC0 register.

To receive data after canceling a wait state, or to complete data transmission, set bit 5 (WREL0) of the IIC0 control register 0 (IICC0) to 1.

To generate a restart condition after canceling a wait state, set bit 1 (STT0) of IICC0 register to 1.

To generate a stop condition after canceling a wait state, set bit 0 (SPT0) of IICC0 register to 1.

Execute the canceling processing only once for one wait state.

If, for example, data is written to IIC0 register after canceling a wait state by setting WREL0 bit to 1, an incorrect value may be output to SDA0 line because the timing for changing the SDA0 line conflicts with the timing for writing IIC0 register.

In addition to the above, communication is stopped if IICE0 bit is cleared to 0 when communication has been aborted, so that the wait state can be canceled.

If the I^2C bus has deadlocked due to noise, processing is saved from communication by setting bit 6 (LREL0) of IICC0 register, so that the wait state can be canceled.

18.5.8 Interrupt request (INTIIC0) generation timing and wait control

The setting of bit 3 (WTIM0) of IIC control register 0 (IICC0) determines the timing by which INTIIC0 is generated and the corresponding wait control, as shown in Table 18-3.

Table 18-3. INTIIC0 Generation Timing and Wait Control

WTIM0	During Slave Device Operation			During Master Device Operation		
	Address	Data Reception	Data Transmission	Address	Data Reception	Data Transmission
0	9[Notes 1, 2]	8[Note 2]	8[Note 2]	9	8	8
1	9[Notes 1, 2]	9[Note 2]	9[Note 2]	9	9	9

Notes 1. The slave device's INTIIC0 signal and wait period occurs at the falling edge of the ninth clock only when there is a match with the address set to slave address register 0 (SVA0).
At this point, $\overline{ACK}$ is generated regardless of the value set to bit 2 (ACKE0) of the IICC0 register. For a slave device that has received an extension code, INTIIC0 occurs at the falling edge of the eighth clock.
However, if the address does not match after restart, INTIIC0 is generated at the falling edge of the 9th clock, but wait does not occur.

2. If the received address does not match the contents of slave address register 0 (SVA0) and extension code is not received, neither INTIIC0 nor a wait occurs.

Remark The numbers in the table indicate the number of the serial clock's clock signals. Interrupt requests and wait control are both synchronized with the falling edge of these clock signals.

(1) During address transmission/reception

- Slave device operation: Interrupt and wait timing are determined depending on the conditions described in Notes 1 and 2 above, regardless of the WTIM0 bit.
- Master device operation: Interrupt and wait timing occur at the falling edge of the ninth clock regardless of the WTIM0 bit.

(2) During data reception

- Master/slave device operation: Interrupt and wait timing are determined according to the WTIM0 bit.

(3) During data transmission

- Master/slave device operation: Interrupt and wait timing are determined according to the WTIM0 bit.

(4) Wait cancellation method

The four wait cancellation methods are as follows.

- Writing data to IIC shift register 0 (IIC0)
- Setting bit 5 (WREL0) of IIC control register 0 (IICC0) (canceling wait)
- Setting bit 1 (STT0) of IIC0 register (generating start condition)[Note]
- Setting bit 0 (SPT0) of IIC0 register (generating stop condition)[Note]

Note Master only.

When an 8-clock wait has been selected (WTIM0 = 0), the presence/absence of $\overline{\text{ACK}}$ generation must be determined prior to wait cancellation.

(5) Stop condition detection

INTIIC0 is generated when a stop condition is detected (only when SPIE0 = 1).

18.5.9 Address match detection method

In I^2C bus mode, the master device can select a particular slave device by transmitting the corresponding slave address.

Address match can be detected automatically by hardware. An interrupt request (INTIIC0) occurs when a local address has been set to slave address register 0 (SVA0) and when the address set to SVA0 matches the slave address sent by the master device, or when an extension code has been received.

18.5.10 Error detection

In I^2C bus mode, the status of the serial data bus (SDA0) during data transmission is captured by IIC shift register 0 (IIC0) of the transmitting device, so the IIC0 data prior to transmission can be compared with the transmitted IIC0 data to enable detection of transmission errors. A transmission error is judged as having occurred when the compared data values do not match.

18.5.11 Extension code

(1) When the higher 4 bits of the receive address are either “0000” or “1111”, the extension code reception flag (EXC0) is set to 1 for extension code reception and an interrupt request (INTIIC0) is issued at the falling edge of the eighth clock. The local address stored in slave address register 0 (SVA0) is not affected.

(2) If “11110××0” is set to SVA0 register by a 10-bit address transfer and “11110××0” is transferred from the master device, the results are as follows. Note that INTIIC0 occurs at the falling edge of the eighth clock.

- Higher four bits of data match: EXC0 = 1
- Seven bits of data match: COI0 = 1

Remark EXC0: Bit 5 of IIC status register 0 (IICS0)
COI0: Bit 4 of IIC status register 0 (IICS0)

(3) Since the processing after the interrupt request occurs differs according to the data that follows the extension code, such processing is performed by software.
If the extension code is received while a slave device is operating, then the slave device is participating in communication even if its address does not match.
For example, after the extension code is received, if you do not wish to operate the target device as a slave device, set bit 6 (LREL0) of the IIC control register 0 (IICC0) to 1 to set the standby mode for the next communication operation.

Table 18-4. Bit Definitions of Main Extension Code

Slave Address	R/W Bit	Description
0 0 0 0 0 0 0	0	General call address
1 1 1 1 0 x x	0	10-bit slave address specification (for address authentication)
1 1 1 1 0 x x	1	10-bit slave address specification (for read command issuance after address match)

Remark For extension codes other than the above, refer to THE I^2C-BUS SPECIFICATION published by NXP.

18.5.12 Arbitration

When several master devices simultaneously generate a start condition (when STT0 is set to 1 before STD0 is set to 1), communication among the master devices is performed as the number of clocks are adjusted until the data differs. This kind of operation is called arbitration.

When one of the master devices loses in arbitration, an arbitration loss flag (ALD0) in IIC status register 0 (IICS0) is set (1) via the timing by which the arbitration loss occurred, and the SCL0 and SDA0 lines are both set to high impedance, which releases the bus.

The arbitration loss is detected based on the timing of the next interrupt request (the eighth or ninth clock, when a stop condition is detected, etc.) and the ALD0 = 1 setting that has been made by software.

For details of interrupt request timing, see **18.5.17 Timing of I^2C interrupt request (INTIIC0) occurrence**.

Remark STD0: Bit 1 of IIC status register 0 (IICS0)
STT0: Bit 1 of IIC control register 0 (IICC0)

Figure 18-19. Arbitration Timing Example

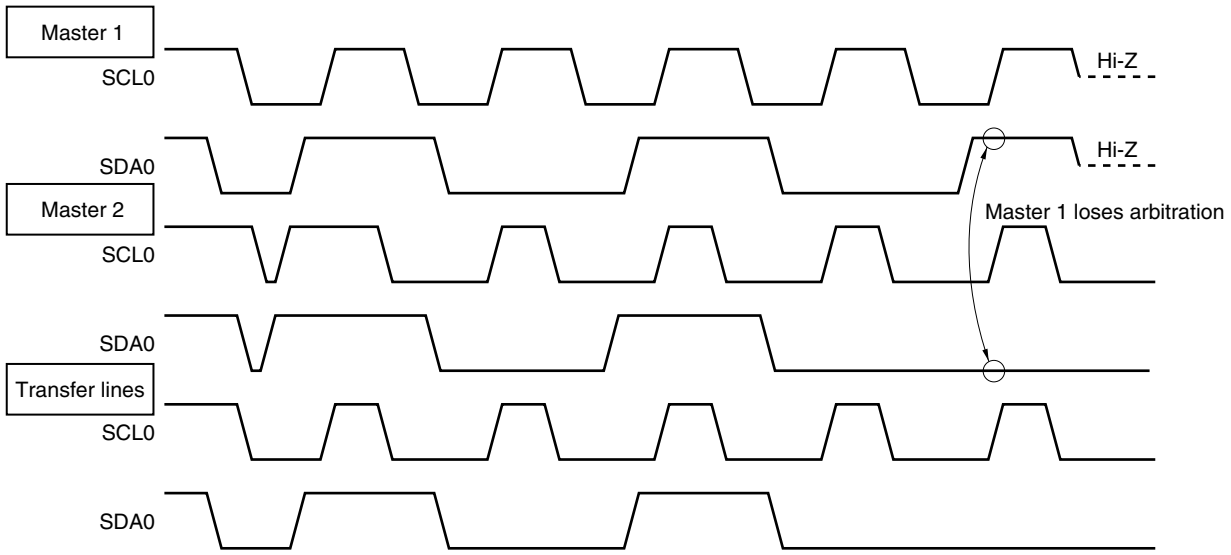

Table 18-5. Status During Arbitration and Interrupt Request Generation Timing

Status During Arbitration	Interrupt Request Generation Timing
During address transmission	At falling edge of eighth or ninth clock following byte transfer[Note 1]
Read/write data after address transmission	
During extension code transmission	
Read/write data after extension code transmission	
During data transmission	
During $\overline{\text{ACK}}$ transfer period after data transmission	
When restart condition is detected during data transfer	
When stop condition is detected during data transfer	When stop condition is generated (when SPIE0 = 1)[Note 2]
When data is at low level while attempting to generate a restart condition	At falling edge of eighth or ninth clock following byte transfer[Note 1]
When stop condition is detected while attempting to generate a restart condition	When stop condition is generated (when SPIE0 = 1)[Note 2]
When data is at low level while attempting to generate a stop condition	At falling edge of eighth or ninth clock following byte transfer[Note 1]
When SCL0 is at low level while attempting to generate a restart condition	

Notes 1. When WTIM0 bit (bit 3 of IIC control register 0 (IICC0)) = 1, an interrupt request occurs at the falling edge of the ninth clock. When WTIM0 = 0 and the extension code's slave address is received, an interrupt request occurs at the falling edge of the eighth clock.

2. When there is a chance that arbitration will occur, set SPIE0 = 1 for master device operation.

Remark SPIE0: Bit 4 of IIC control register 0 (IICC0)

18.5.13 Wakeup function

The I^2C bus slave function is a function that generates an interrupt request signal (INTIIC0) when a local address and extension code have been received.

This function makes processing more efficient by preventing unnecessary INTIIC0 signal from occurring when addresses do not match.

When a start condition is detected, wakeup standby mode is set. This wakeup standby mode is in effect while addresses are transmitted due to the possibility that an arbitration loss may change the master device (which has generated a start condition) to a slave device.

However, when a stop condition is detected, bit 4 (SPIE0) of IIC control register 0 (IICC0) is set regardless of the wakeup function, and this determines whether interrupt requests are enabled or disabled.

18.5.14 Communication reservation

(1) When communication reservation function is enabled (bit 0 (IICRSV) of IIC flag register 0 (IICF0) = 0)

To start master device communications when not currently using a bus, a communication reservation can be made to enable transmission of a start condition when the bus is released. There are two modes under which the bus is not used.

- When arbitration results in neither master nor slave operation
- When an extension code is received and slave operation is disabled ($\overline{ACK}$ is not returned and the bus was released when bit 6 (LREL0) of IIC control register 0 (IICC0) was set to 1).

If bit 1 (STT0) of IICC0 is set to 1 while the bus is not used (after a stop condition is detected), a start condition is automatically generated and wait state is set.
If an address is written to IIC shift register 0 (IIC0) after bit 4 (SPIE0) of IICC0 was set to 1, and it was detected by generation of an interrupt request signal (INTIIC0) that the bus was released (detection of the stop condition), then the device automatically starts communication as the master. Data written to IIC0 before the stop condition is detected is invalid.
When STT0 has been set to 1, the operation mode (as start condition or as communication reservation) is determined according to the bus status.

- If the bus has been released ..... a start condition is generated
- If the bus has not been released (standby mode)..... communication reservation

Check whether the communication reservation operates or not by using MSTS0 bit (bit 7 of IIC status register 0 (IICS0)) after STT0 bit is set to 1 and the wait time elapses.
The wait periods, which should be set via software, are listed in Table 18-6.

Table 18-6. Wait Periods

CLX0	SMC0	CL01	CL00	Wait Period
0	0	0	0	46 clocks
0	0	0	1	86 clocks
0	0	1	0	172 clocks
0	0	1	1	34 clocks
0	1	0	0	30 clocks
0	1	0	1	
0	1	1	0	60 clocks
0	1	1	1	12 clocks
1	1	0	0	18 clocks
1	1	0	1	
1	1	1	0	36 clocks

Figure 18-20 shows the communication reservation timing.

Figure 18-20. Communication Reservation Timing

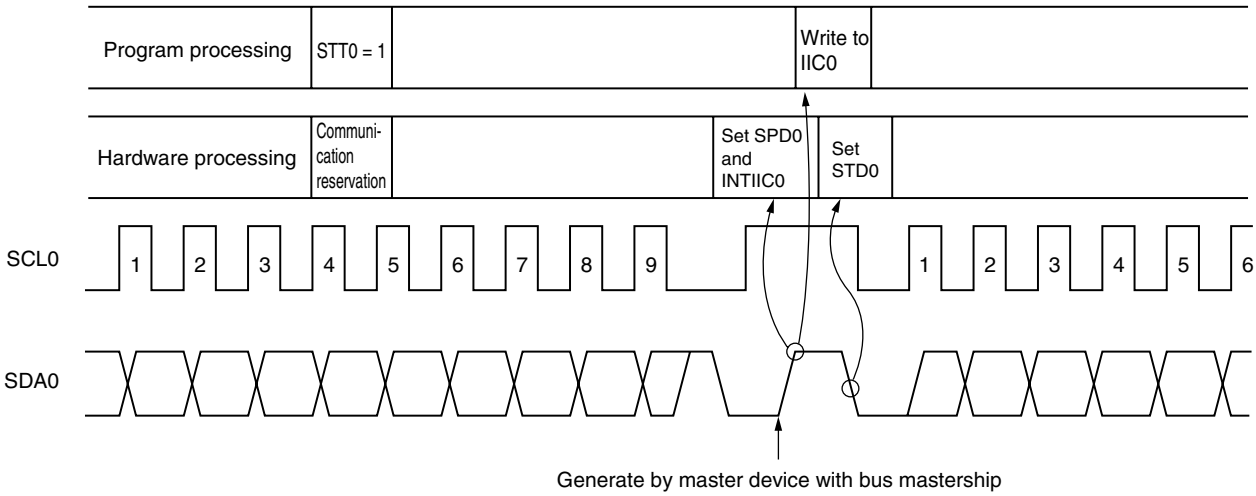

Remark IIC0: IIC shift register 0
STT0: Bit 1 of IIC control register 0 (IICC0)
STD0: Bit 1 of IIC status register 0 (IICS0)
SPD0: Bit 0 of IIC status register 0 (IICS0)

Communication reservations are accepted via the following timing. After bit 1 (STD0) of IIC status register 0 (IICS0) is set to 1, a communication reservation can be made by setting bit 1 (STT0) of IIC control register 0 (IICC0) to 1 before a stop condition is detected.

Figure 18-21. Timing for Accepting Communication Reservations

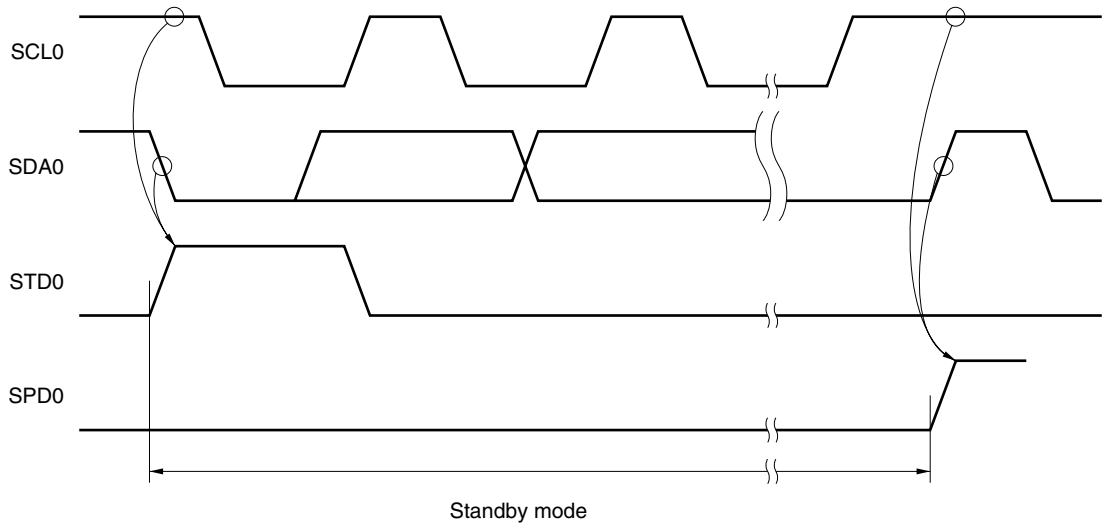

Figure 18-22 shows the communication reservation protocol.

Figure 18-22. Communication Reservation Protocol

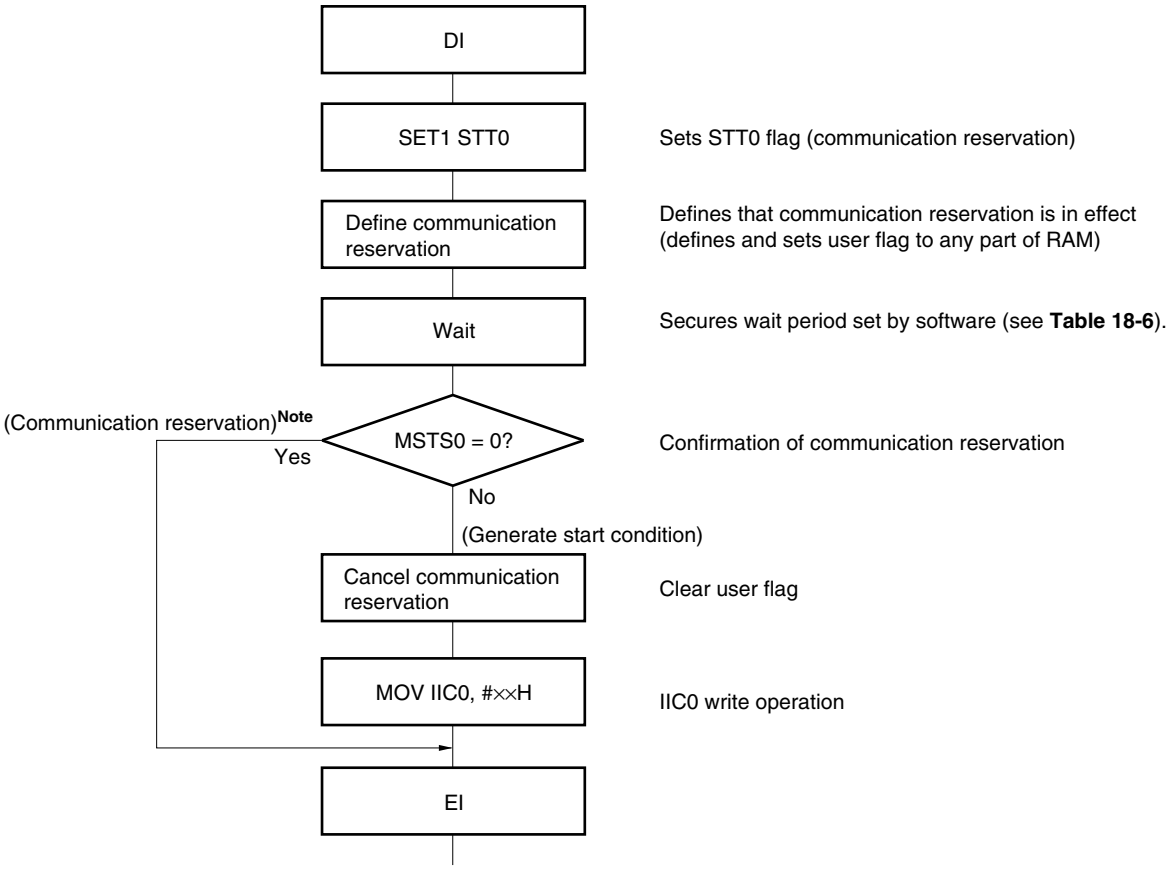

Note The communication reservation operation executes a write to IIC shift register 0 (IIC0) when a stop condition interrupt request occurs.

Remark STT0: Bit 1 of IIC control register 0 (IICC0)
MSTS0: Bit 7 of IIC status register 0 (IICS0)
IIC0: IIC shift register 0

(2) When communication reservation function is disabled (bit 0 (IICRSV) of IIC flag register 0 (IICF0) = 1)

When bit 1 (STT0) of IIC control register 0 (IICC0) is set to 1 when the bus is not used in a communication during bus communication, this request is rejected and a start condition is not generated. The following two statuses are included in the status where bus is not used.

- When arbitration results in neither master nor slave operation
- When an extension code is received and slave operation is disabled ($\overline{\text{ACK}}$ is not returned and the bus was released when bit 6 (LREL0) of IICC0 register was set to 1)

To confirm whether the start condition was generated or request was rejected, check STCF flag (bit 7 of IICF0). The time shown in Table 18-7 is required until STCF flag is set to 1 after setting STT0 = 1. Therefore, secure the time by software.

Table 18-7. Wait Periods

CL01	CL00	Wait Period
0	0	6 clocks
0	1	6 clocks
1	0	12 clocks
1	1	3 clocks

18.5.15 Cautions

(1) When STCEN (bit 1 of IIC flag register 0 (IICF0)) = 0

Immediately after I^2C operation is enabled (IICE0 = 1), the bus communication status (IICBSY flag (bit 6 of IICF0) = 1) is recognized regardless of the actual bus status. When changing from a mode in which no stop condition has been detected to a master device communication mode, first generate a stop condition to release the bus, then perform master device communication.

When using multiple masters, it is not possible to perform master device communication when the bus has not been released (when a stop condition has not been detected).

Use the following sequence for generating a stop condition.

<1> Set IIC clock selection register 0 (IICCL0).
<2> Set bit 7 (IICE0) of IIC control register 0 (IICC0) to 1.
<3> Set bit 0 (SPT0) of IICC0 to 1.

(2) When STCEN = 1

Immediately after I^2C operation is enabled (IICE0 = 1), the bus released status (IICBSY = 0) is recognized regardless of the actual bus status. To generate the first start condition (STT0 (bit 1 of IIC control register 0 (IICC0)) = 1), it is necessary to confirm that the bus has been released, so as to not disturb other communications.

(3) If other I^2C communications are already in progress

If I^2C operation is enabled and the device participates in communication already in progress when the SDA0 pin is low and the SCL0 pin is high, the macro of I^2C recognizes that the SDA0 pin has gone low (detects a start condition). If the value on the bus at this time can be recognized as an extension code, $\overline{ACK}$ is returned, but this interferes with other I^2C communications. To avoid this, start I^2C in the following sequence.

<1> Clear bit 4 (SPIE0) of IICC0 register to 0 to disable generation of an interrupt request signal (INTIIC0) when the stop condition is detected.
<2> Set bit 7 (IICE0) of IICC0 register to 1 to enable the operation of I^2C.
<3> Wait for detection of the start condition.
<4> Set bit 6 (LREL0) of IICC0 register to 1 before $\overline{ACK}$ is returned (4 to 80 clocks after setting IICE0 bit to 1), to forcibly disable detection.

(4) Determine the transfer clock frequency by using SMC0, CL01, CL00 bits (bits 3, 1, and 0 of IICL0 register), and CLX0 bit (bit 0 of IICX0 register) before enabling the operation (IICE0 = 1). To change the transfer clock frequency, clear IICE0 bit to 0 once.

(5) Setting STT0 and SPT0 bits (bits 1 and 0 of IICC0 register) again after they are set and before they are cleared to 0 is prohibited.

(6) When transmission is reserved, set SPIE0 bit (bit 4 of IICL0 register) to 1 so that an interrupt request is generated when the stop condition is detected. Transfer is started when communication data is written to IIC status register 0 (IICS0) after the interrupt request is generated. Unless the interrupt is generated when the stop condition is detected, the device stops in the wait state because the interrupt request is not generated when communication is started. However, it is not necessary to set SPIE0 bit to 1 when MSTS0 bit (bit 7 of IIC status register 0 (IICS0) is detected by software.

18.5.16 Communication operations

The following shows three operation procedures with the flowchart.

(1) Master operation in single master system

The flowchart when using the 78K0/Kx2 microcontrollers as the master in a single master system is shown below.
This flowchart is broadly divided into the initial settings and communication processing. Execute the initial settings at startup. If communication with the slave is required, prepare the communication and then execute communication processing.

(2) Master operation in multimaster system

In the I^2C bus multimaster system, whether the bus is released or used cannot be judged by the I^2C bus specifications when the bus takes part in a communication. Here, when data and clock are at a high level for a certain period (1 frame), the 78K0/Kx2 microcontrollers takes part in a communication with bus released state.
This flowchart is broadly divided into the initial settings, communication waiting, and communication processing. The processing when the 78K0/Kx2 microcontrollers looses in arbitration and is specified as the slave is omitted here, and only the processing as the master is shown. Execute the initial settings at startup to take part in a communication. Then, wait for the communication request as the master or wait for the specification as the slave. The actual communication is performed in the communication processing, and it supports the transmission/reception with the slave and the arbitration with other masters.

(3) Slave operation

An example of when the 78K0/Kx2 microcontrollers is used as the I^2C bus slave is shown below.
When used as the slave, operation is started by an interrupt. Execute the initial settings at startup, then wait for the INTIIC0 interrupt occurrence (communication waiting). When an INTIIC0 interrupt occurs, the communication status is judged and its result is passed as a flag over to the main processing.
By checking the flags, necessary communication processing is performed.

(1) Master operation in single-master system

Figure 18-23. Master Operation in Single-Master System

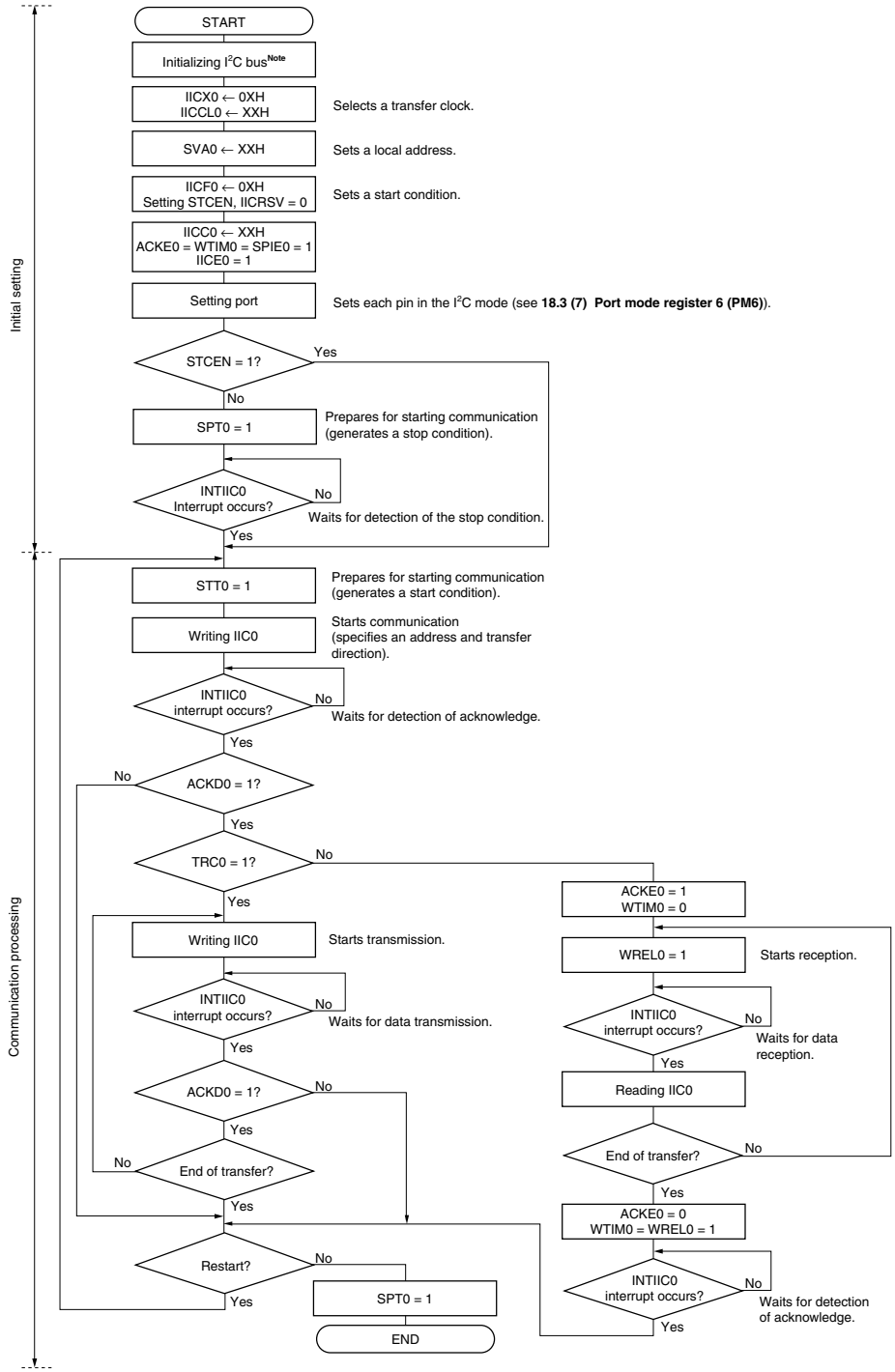

Note Release (SCL0 and SDA0 pins = high level) the I^2C bus in conformance with the specifications of the product that is communicating. If EEPROM is outputting a low level to the SDA0 pin, for example, set the SCL0 pin in the output port mode, and output a clock pulse from the output port until the SDA0 pin is constantly at high level.

Remark Conform to the specifications of the product that is communicating, with respect to the transmission and reception formats.

(2) Master operation in multi-master system

Figure 18-24. Master Operation in Multi-Master System (1/3)

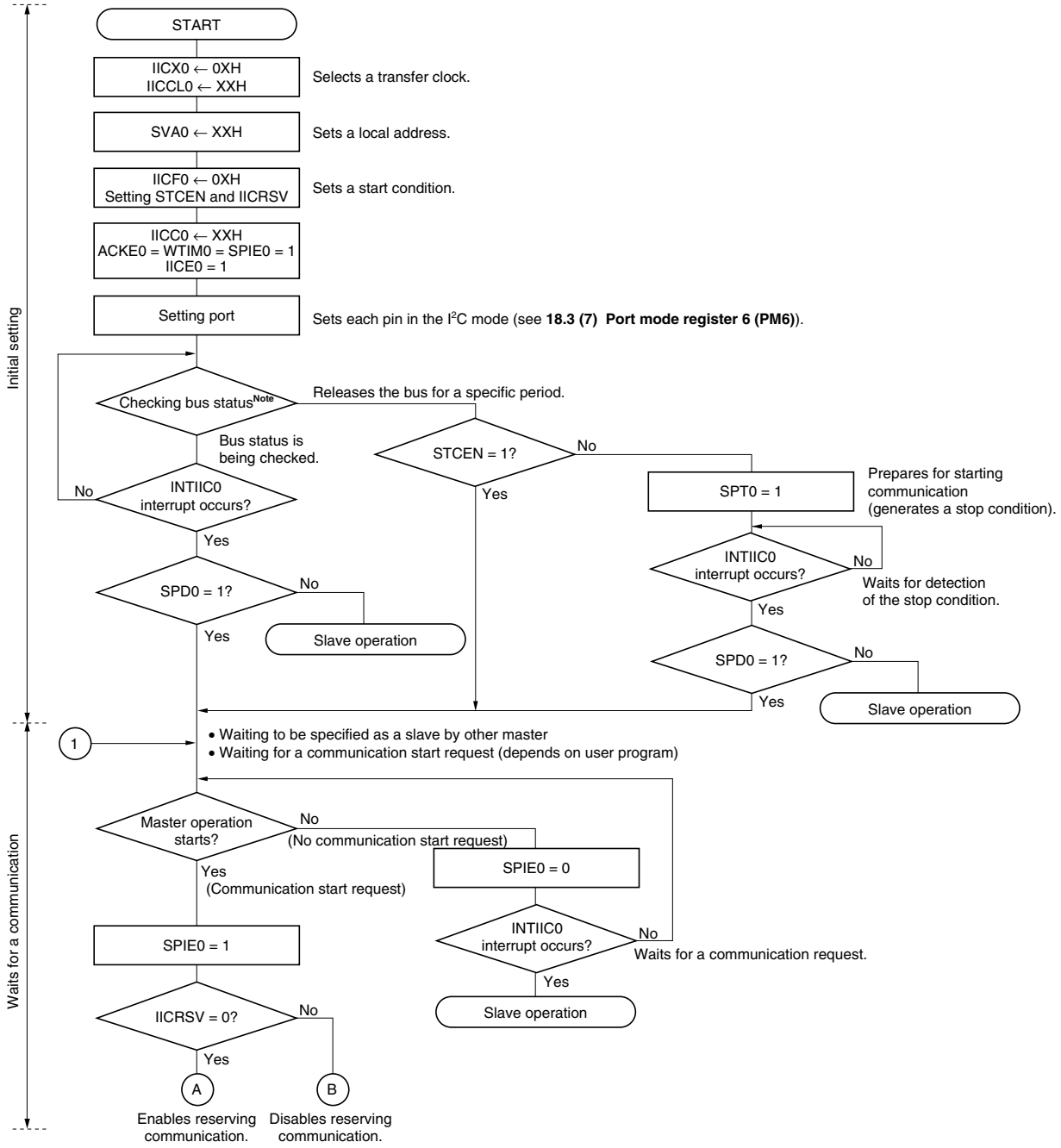

Note Confirm that the bus is released (CLD0 bit = 1, DAD0 bit = 1) for a specific period (for example, for a period of one frame). If the SDA0 pin is constantly at low level, decide whether to release the I^2C bus (SCL0 and SDA0 pins = high level) in conformance with the specifications of the product that is communicating.

Figure 18-24. Master Operation in Multi-Master System (2/3)

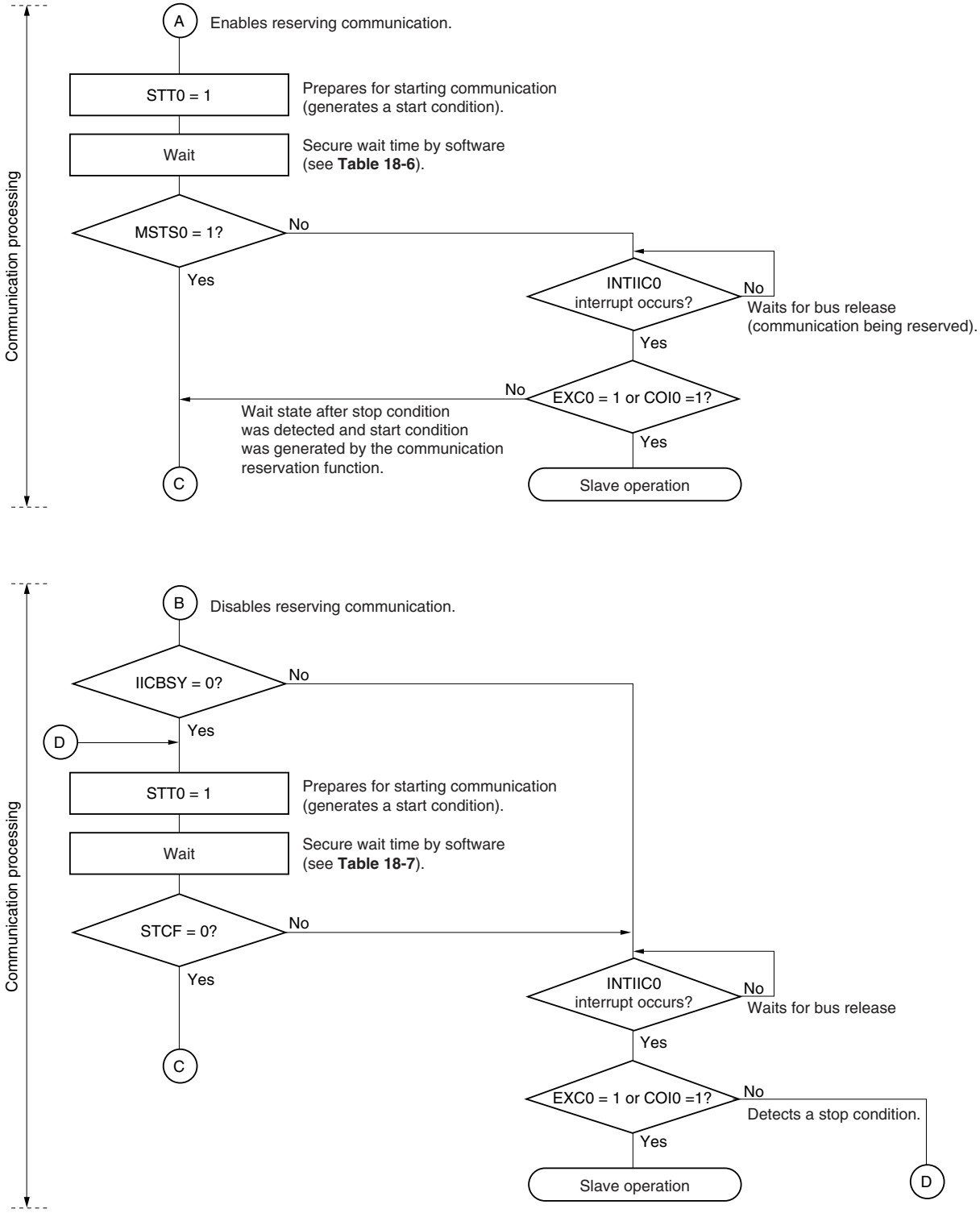

Figure 18-24. Master Operation in Multi-Master System (3/3)

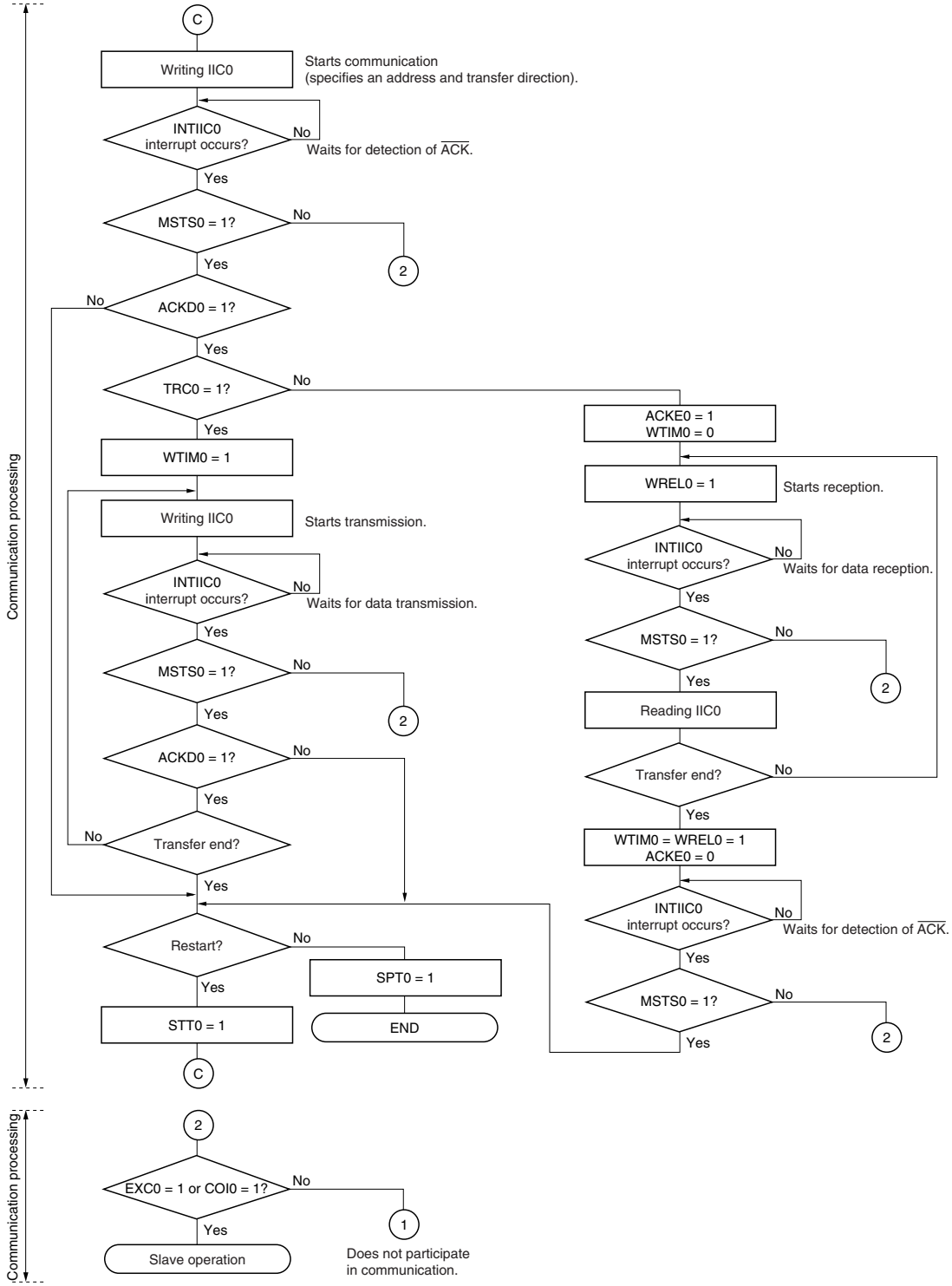

Remarks 1. Conform to the specifications of the product that is communicating, with respect to the transmission and reception formats.

2. To use the device as a master in a multi-master system, read the MSTS0 bit each time interrupt INTIIC0 has occurred to check the arbitration result.

3. To use the device as a slave in a multi-master system, check the status by using the IICS0 and IICF0 registers each time interrupt INTIIC0 has occurred, and determine the processing to be performed next.

(3) Slave operation

The processing procedure of the slave operation is as follows.

Basically, the slave operation is event-driven. Therefore, processing by the INTIIC0 interrupt (processing that must substantially change the operation status such as detection of a stop condition during communication) is necessary.

In the following explanation, it is assumed that the extension code is not supported for data communication. It is also assumed that the INTIIC0 interrupt servicing only performs status transition processing, and that actual data communication is performed by the main processing.

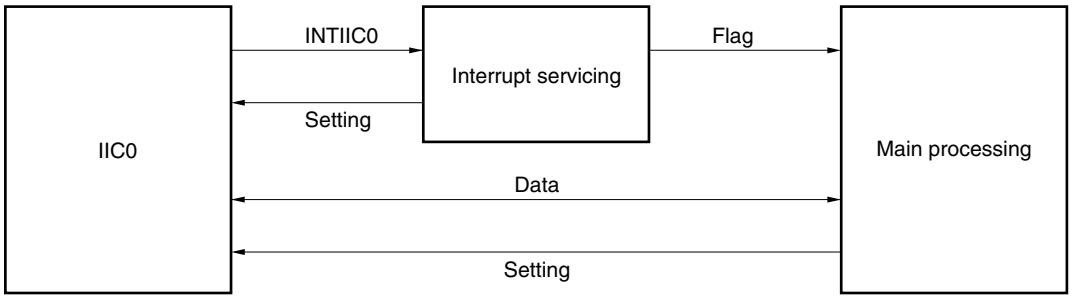

Therefore, data communication processing is performed by preparing the following three flags and passing them to the main processing instead of INTIIC0.

<1> Communication mode flag

This flag indicates the following two communication statuses.

- Clear mode: Status in which data communication is not performed
- Communication mode: Status in which data communication is performed (from valid address detection to stop condition detection, no detection of $\overline{\text{ACK}}$ from master, address mismatch)

<2> Ready flag

This flag indicates that data communication is enabled. Its function is the same as the INTIIC0 interrupt for ordinary data communication. This flag is set by interrupt servicing and cleared by the main processing. Clear this flag by interrupt servicing when communication is started. However, the ready flag is not set by interrupt servicing when the first data is transmitted. Therefore, the first data is transmitted without the flag being cleared (an address match is interpreted as a request for the next data).

<3> Communication direction flag

This flag indicates the direction of communication. Its value is the same as TRC0.

The main processing of the slave operation is explained next.

Start serial interface IIC0 and wait until communication is enabled. When communication is enabled, execute communication by using the communication mode flag and ready flag (processing of the stop condition and start condition is performed by an interrupt. Here, check the status by using the flags).

The transmission operation is repeated until the master no longer returns $\overline{ACK}$. If $\overline{ACK}$ is not returned from the master, communication is completed.

For reception, the necessary amount of data is received. When communication is completed, $\overline{ACK}$ is not returned as the next data. After that, the master generates a stop condition or restart condition. Exit from the communication status occurs in this way.

Figure 18-25. Slave Operation Flowchart (1)

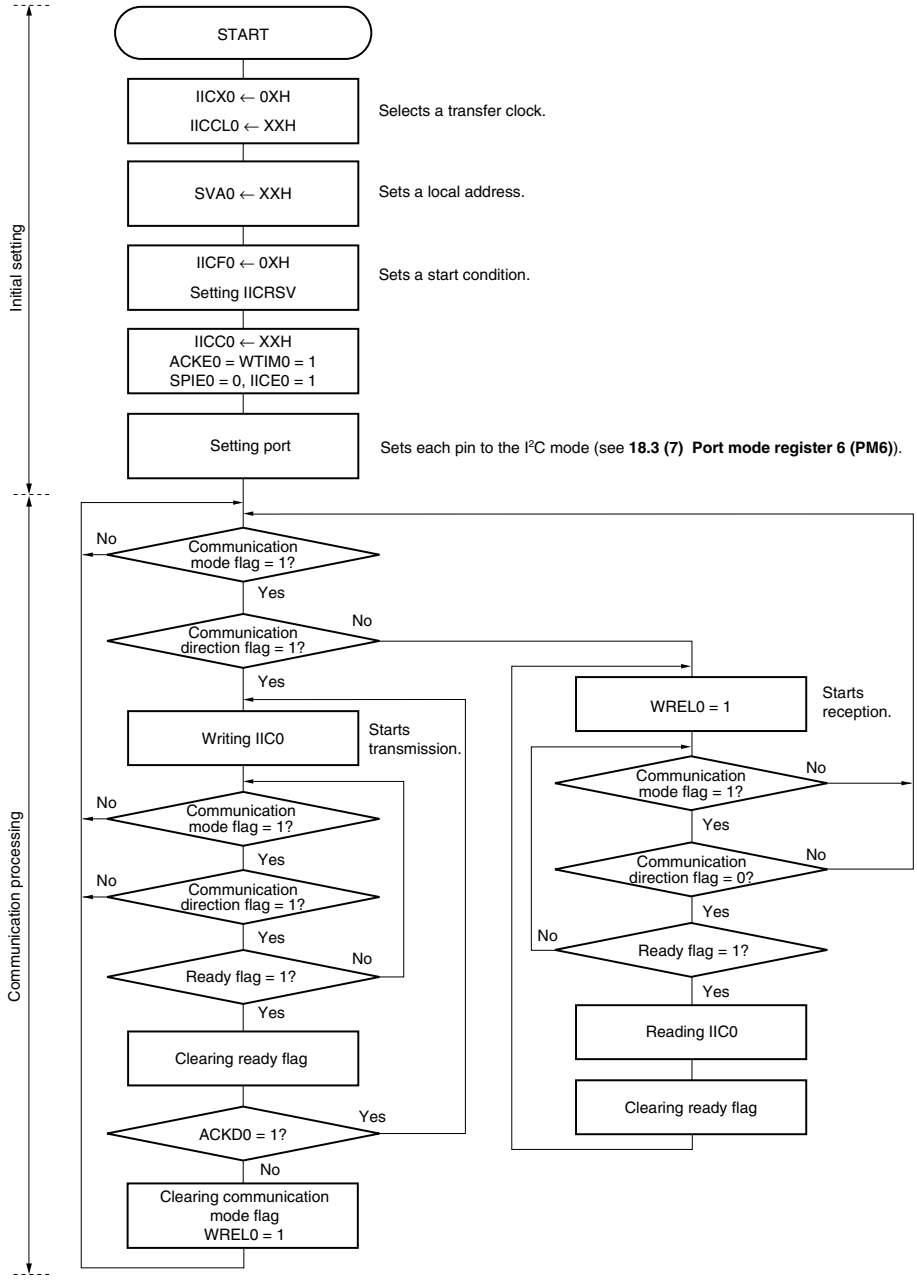

Remark Conform to the specifications of the product that is in communication, regarding the transmission and reception formats.

An example of the processing procedure of the slave with the INTIIC0 interrupt is explained below (processing is performed assuming that no extension code is used). The INTIIC0 interrupt checks the status, and the following operations are performed.

<1> Communication is stopped if the stop condition is issued.
<2> If the start condition is issued, the address is checked and communication is completed if the address does not match. If the address matches, the communication mode is set, wait is cancelled, and processing returns from the interrupt (the ready flag is cleared).
<3> For data transmit/receive, only the ready flag is set. Processing returns from the interrupt with the I^2C bus remaining in the wait state.

Remark <1> to <3> above correspond to <1> to <3> in **Figure 18-26 Slave Operation Flowchart (2)**.

Figure 18-26. Slave Operation Flowchart (2)

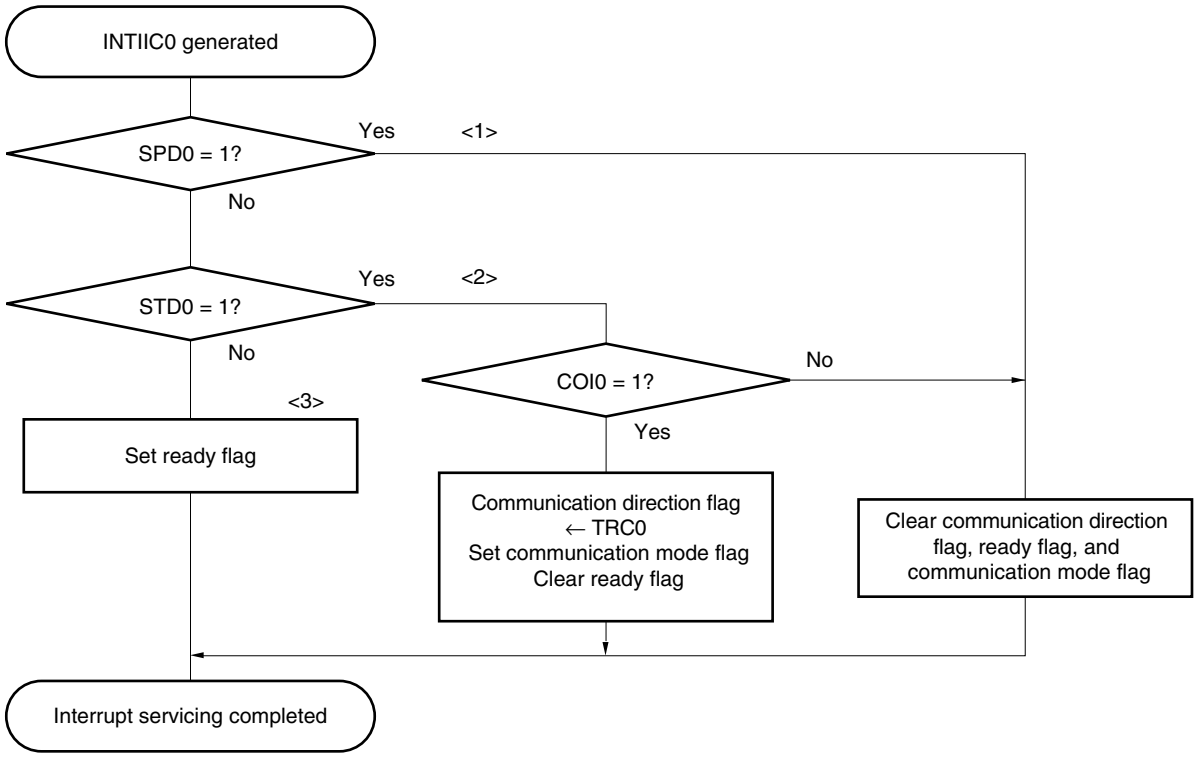

18.5.17 Timing of I²C interrupt request (INTIIC0) occurrence

The timing of transmitting or receiving data and generation of interrupt request signal INTIIC0, and the value of the IICS0 register when the INTIIC0 signal is generated are shown below.

Remark ST: Start condition
AD6 to AD0: Address
R/$\overline{W}$: Transfer direction specification
$\overline{ACK}$: Acknowledge
D7 to D0: Data
SP: Stop condition

(1) Master device operation

(a) Start ~ Address ~ Data ~ Data ~ Stop (transmission/reception)

(i) When WTIM0 = 0

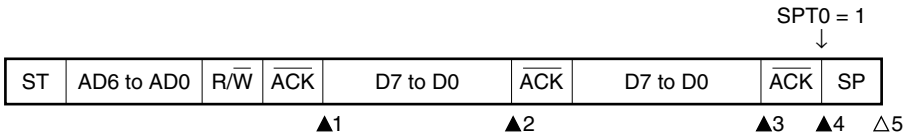

▲1: IICS0 = 1000×110B
▲2: IICS0 = 1000×000B
▲3: IICS0 = 1000×000B (Sets WTIM0 to 1[Note])
▲4: IICS0 = 1000××00B (Sets SPT0 to 1)
△5: IICS0 = 00000001B

Note To generate a stop condition, set WTIM0 to 1 and change the timing for generating the INTIIC0 interrupt request signal.

Remark ▲: Always generated
△: Generated only when SPIE0 = 1
×: Don't care

(ii) When WTIM0 = 1

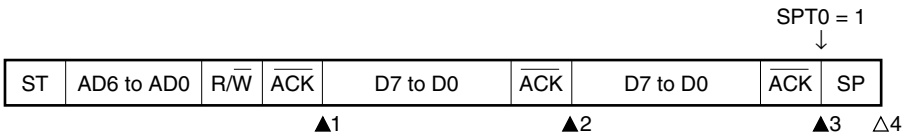

▲1: IICS0 = 1000×110B
▲2: IICS0 = 1000×100B
▲3: IICS0 = 1000××00B (Sets SPT0 to 1)
△4: IICS0 = 00000001B

Remark ▲: Always generated
△: Generated only when SPIE0 = 1
×: Don't care

(b) Start ~ Address ~ Data ~ Start ~ Address ~ Data ~ Stop (restart)

(i) When WTIM0 = 0

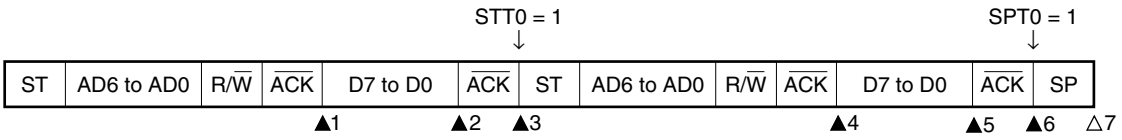

▲1: IICS0 = 1000×110B
▲2: IICS0 = 1000×000B (Sets WTIM0 to 1[Note 1])
▲3: IICS0 = 1000××00B (Clears WTIM0 to 0[Note 2], sets STT0 to 1)
▲4: IICS0 = 1000×110B
▲5: IICS0 = 1000×000B (Sets WTIM0 to 1[Note 3])
▲6: IICS0 = 1000××00B (Sets SPT0 to 1)
△7: IICS0 = 00000001B

Notes 1. To generate a start condition, set WTIM0 to 1 and change the timing for generating the INTIIC0 interrupt request signal.
2. Clear WTIM0 to 0 to restore the original setting.
3. To generate a stop condition, set WTIM0 to 1 and change the timing for generating the INTIIC0 interrupt request signal.

Remark ▲: Always generated
△: Generated only when SPIE0 = 1
×: Don't care

(ii) When WTIM0 = 1

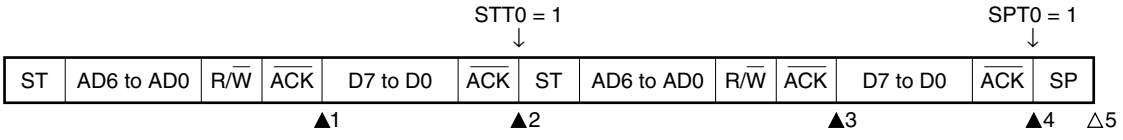

▲1: IICS0 = 1000×110B
▲2: IICS0 = 1000××00B (Sets STT0 to 1)
▲3: IICS0 = 1000×110B
▲4: IICS0 = 1000××00B (Sets SPT0 to 1)
△5: IICS0 = 00000001B

Remark ▲: Always generated
△: Generated only when SPIE0 = 1
×: Don't care

(c) Start ~ Code ~ Data ~ Data ~ Stop (extension code transmission)

(i) When WTIM0 = 0

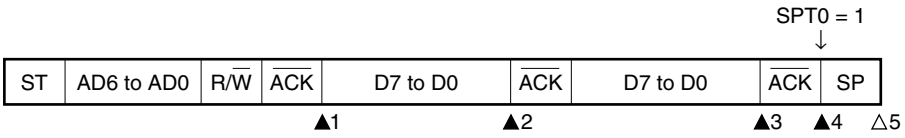

▲1: IICS0 = 1010×110B
▲2: IICS0 = 1010×000B
▲3: IICS0 = 1010×000B (Sets WTIM0 to 1[Note])
▲4: IICS0 = 1010××00B (Sets SPT0 to 1)
△5: IICS0 = 00000001B

Note To generate a stop condition, set WTIM0 to 1 and change the timing for generating the INTIIC0 interrupt request signal.

Remark ▲: Always generated
△: Generated only when SPIE0 = 1
×: Don't care

(ii) When WTIM0 = 1

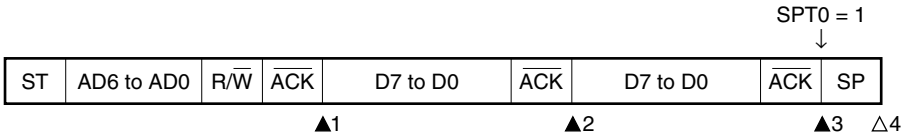

▲1: IICS0 = 1010×110B
▲2: IICS0 = 1010×100B
▲3: IICS0 = 1010××00B (Sets SPT0 to 1)
△4: IICS0 = 00001001B

Remark ▲: Always generated
△: Generated only when SPIE0 = 1
×: Don't care

(2) Slave device operation (slave address data reception)

(a) Start ~ Address ~ Data ~ Data ~ Stop

(i) When WTIM0 = 0

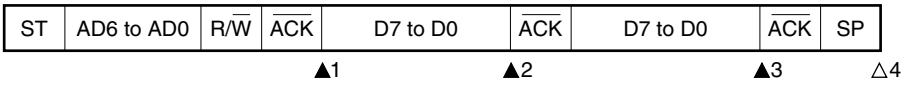

▲1: IICS0 = 0001×110B
▲2: IICS0 = 0001×000B
▲3: IICS0 = 0001×000B
△4: IICS0 = 00000001B

Remark ▲: Always generated
△: Generated only when SPIE0 = 1
×: Don't care

(ii) When WTIM0 = 1

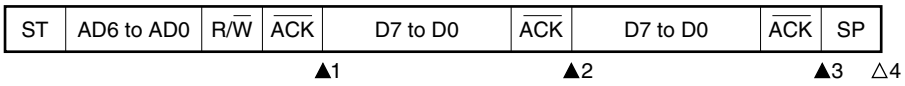

▲1: IICS0 = 0001×110B
▲2: IICS0 = 0001×100B
▲3: IICS0 = 0001××00B
△4: IICS0 = 00000001B

Remark ▲: Always generated
△: Generated only when SPIE0 = 1
×: Don't care

(b) Start ~ Address ~ Data ~ Start ~ Address ~ Data ~ Stop

(i) When WTIM0 = 0 (after restart, matches with SVA0)

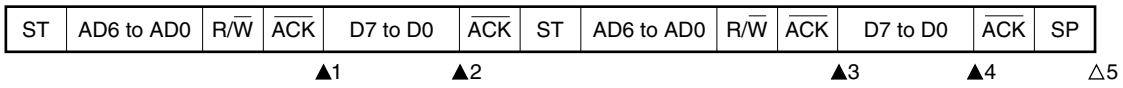

▲1: IICS0 = 0001×110B
▲2: IICS0 = 0001×000B
▲3: IICS0 = 0001×110B
▲4: IICS0 = 0001×000B
△5: IICS0 = 00000001B

Remark ▲: Always generated
△: Generated only when SPIE0 = 1
×: Don't care

(ii) When WTIM0 = 1 (after restart, matches with SVA0)

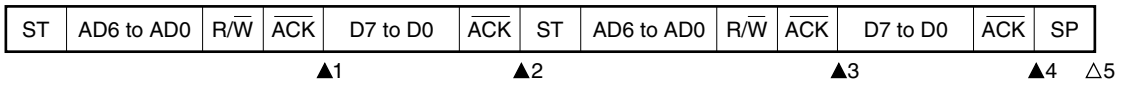

▲1: IICS0 = 0001×110B
▲2: IICS0 = 0001××00B
▲3: IICS0 = 0001×110B
▲4: IICS0 = 0001××00B
△5: IICS0 = 00000001B

Remark ▲: Always generated
△: Generated only when SPIE0 = 1
×: Don't care

(c) Start ~ Address ~ Data ~ Start ~ Code ~ Data ~ Stop

(i) When WTIM0 = 0 (after restart, does not match address (= extension code))

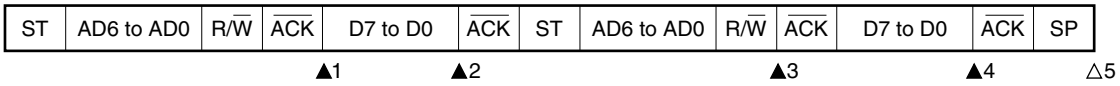

▲1: IICS0 = 0001×110B
▲2: IICS0 = 0001×000B
▲3: IICS0 = 0010×010B
▲4: IICS0 = 0010×000B
△5: IICS0 = 00000001B

Remark ▲: Always generated
△: Generated only when SPIE0 = 1
×: Don't care

(ii) When WTIM0 = 1 (after restart, does not match address (= extension code))

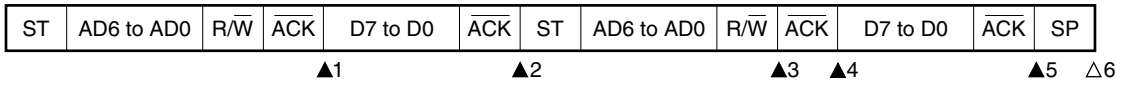

▲1: IICS0 = 0001×110B
▲2: IICS0 = 0001××00B
▲3: IICS0 = 0010×010B
▲4: IICS0 = 0010×110B
▲5: IICS0 = 0010××00B
△6: IICS0 = 00000001B

Remark ▲: Always generated
△: Generated only when SPIE0 = 1
×: Don't care

(d) Start ~ Address ~ Data ~ Start ~ Address ~ Data ~ Stop

(i) When WTIM0 = 0 (after restart, does not match address (= not extension code))

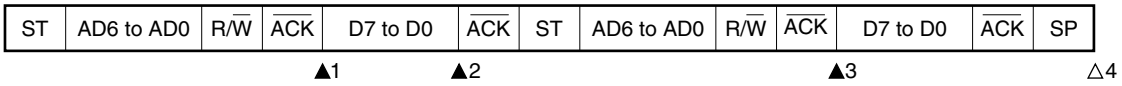

▲1 ▲2 ▲3 △4

▲1: IICS0 = 0001×110B
▲2: IICS0 = 0001×000B
▲3: IICS0 = 00000110B
△4: IICS0 = 00000001B

Remark ▲: Always generated
△: Generated only when SPIE0 = 1
×: Don't care

(ii) When WTIM0 = 1 (after restart, does not match address (= not extension code))

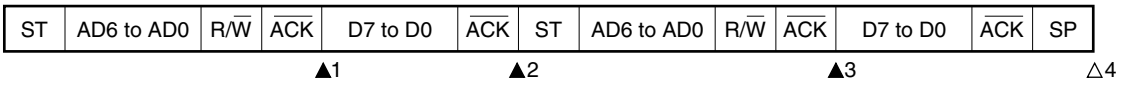

▲1 ▲2 ▲3 △4

▲1: IICS0 = 0001×110B
▲2: IICS0 = 0001××00B
▲3: IICS0 = 00000110B
△4: IICS0 = 00000001B

Remark ▲: Always generated
△: Generated only when SPIE0 = 1
×: Don't care

(3) Slave device operation (when receiving extension code)

The device is always participating in communication when it receives an extension code.

(a) Start ~ Code ~ Data ~ Data ~ Stop

(i) When WTIM0 = 0

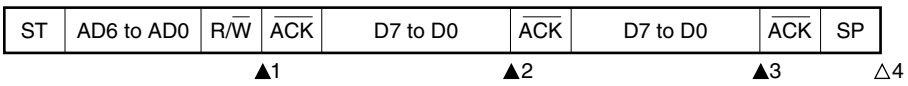

▲1: IICS0 = 0010×010B
▲2: IICS0 = 0010×000B
▲3: IICS0 = 0010×000B
△4: IICS0 = 00000001B

Remark ▲: Always generated
△: Generated only when SPIE0 = 1
×: Don't care

(ii) When WTIM0 = 1

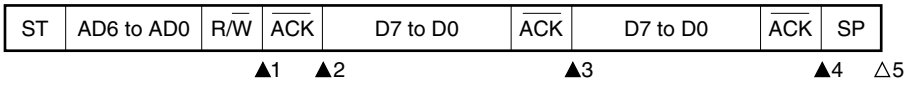

▲1: IICS0 = 0010×010B
▲2: IICS0 = 0010×110B
▲3: IICS0 = 0010×100B
▲4: IICS0 = 0010××00B
△5: IICS0 = 00000001B

Remark ▲: Always generated
△: Generated only when SPIE0 = 1
×: Don't care

(b) Start ~ Code ~ Data ~ Start ~ Address ~ Data ~ Stop

(i) When WTIM0 = 0 (after restart, matches SVA0)

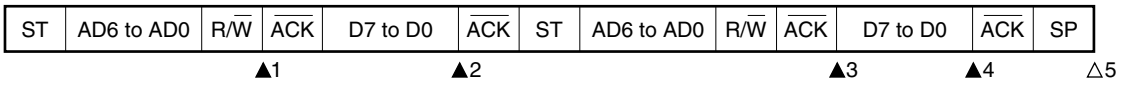

▲1: IICS0 = 0010×010B
▲2: IICS0 = 0010×000B
▲3: IICS0 = 0001×110B
▲4: IICS0 = 0001×000B
△5: IICS0 = 00000001B

Remark ▲: Always generated
△: Generated only when SPIE0 = 1
×: Don't care

(ii) When WTIM0 = 1 (after restart, matches SVA0)

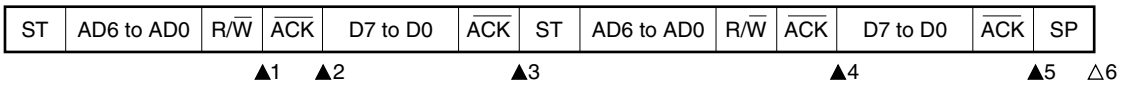

▲1: IICS0 = 0010×010B
▲2: IICS0 = 0010×110B
▲3: IICS0 = 0010××00B
▲4: IICS0 = 0001×110B
▲5: IICS0 = 0001××00B
△6: IICS0 = 00000001B

Remark ▲: Always generated
△: Generated only when SPIE0 = 1
×: Don't care

(c) Start ~ Code ~ Data ~ Start ~ Code ~ Data ~ Stop

(i) When WTIM0 = 0 (after restart, extension code reception)

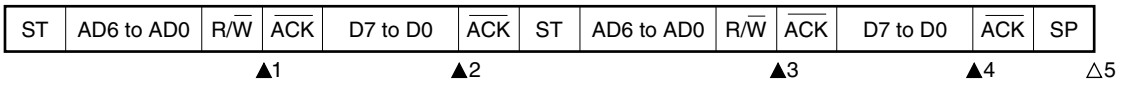

▲1: IICS0 = 0010×010B
▲2: IICS0 = 0010×000B
▲3: IICS0 = 0010×010B
▲4: IICS0 = 0010×000B
△5: IICS0 = 00000001B

Remark ▲: Always generated
△: Generated only when SPIE0 = 1
×: Don't care

(ii) When WTIM0 = 1 (after restart, extension code reception)

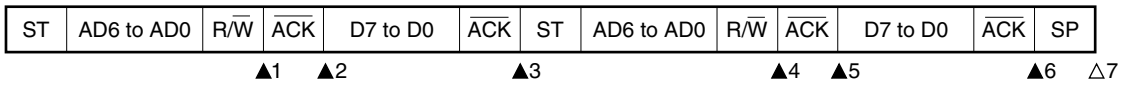

▲1: IICS0 = 0010×010B
▲2: IICS0 = 0010×110B
▲3: IICS0 = 0010××00B
▲4: IICS0 = 0010×010B
▲5: IICS0 = 0010×110B
▲6: IICS0 = 0010××00B
△7: IICS0 = 00000001B

Remark ▲: Always generated
△: Generated only when SPIE0 = 1
×: Don't care

(d) Start ~ Code ~ Data ~ Start ~ Address ~ Data ~ Stop

(i) When WTIM0 = 0 (after restart, does not match address (= not extension code))



▲1: IICS0 = 00100010B
▲2: IICS0 = 00100000B
▲3: IICS0 = 00000110B
△4: IICS0 = 00000001B

Remark ▲: Always generated
△: Generated only when SPIE0 = 1
×: Don't care

(ii) When WTIM0 = 1 (after restart, does not match address (= not extension code))

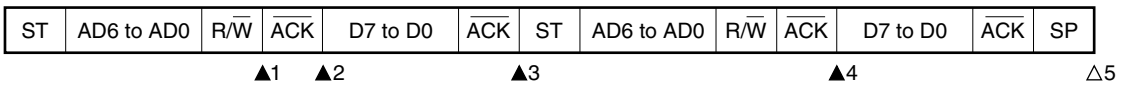

▲1: IICS0 = 00100010B
▲2: IICS0 = 00100110B
▲3: IICS0 = 00100×00B
▲4: IICS0 = 00000110B
△5: IICS0 = 00000001B

Remark ▲: Always generated
△: Generated only when SPIE0 = 1
×: Don't care

(4) Operation without communication

(a) Start ~ Code ~ Data ~ Data ~ Stop

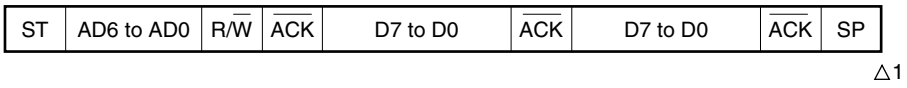

△1: IICS0 = 00000001B

Remark △: Generated only when SPIE0 = 1

(5) Arbitration loss operation (operation as slave after arbitration loss)

When the device is used as a master in a multi-master system, read the MSTS0 bit each time interrupt request signal INTIIC0 has occurred to check the arbitration result.

(a) When arbitration loss occurs during transmission of slave address data

(i) When WTIM0 = 0

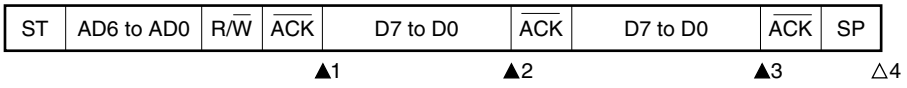

▲1: IICS0 = 0101×110B
▲2: IICS0 = 0001×000B
▲3: IICS0 = 0001×000B
△4: IICS0 = 00000001B

Remark ▲: Always generated
△: Generated only when SPIE0 = 1
×: Don't care

(ii) When WTIM0 = 1

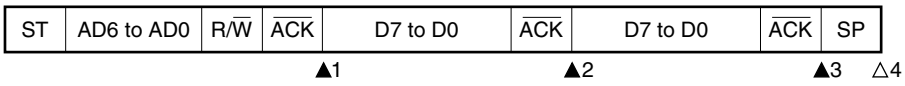

▲1 ▲2 ▲3 △4

▲1: IICS0 = 0101×110B
▲2: IICS0 = 0001×100B
▲3: IICS0 = 0001××00B
△4: IICS0 = 00000001B

Remark ▲: Always generated
△: Generated only when SPIE0 = 1
×: Don't care

(b) When arbitration loss occurs during transmission of extension code

(i) When WTIM0 = 0

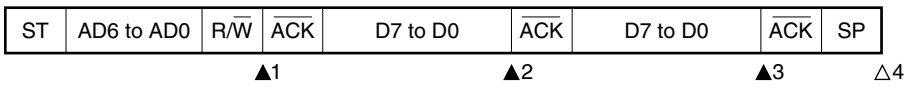

▲1 ▲2 ▲3 △4

▲1: IICS0 = 0110×010B
▲2: IICS0 = 0010×000B
▲3: IICS0 = 0010×000B
△4: IICS0 = 00000001B

Remark ▲: Always generated
△: Generated only when SPIE0 = 1
×: Don't care

(ii) When WTIM0 = 1

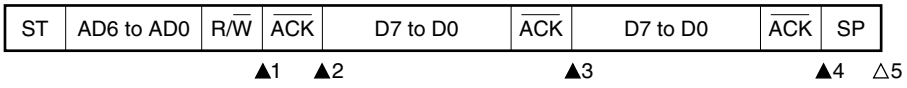

▲1: IICS0 = 0110×010B
▲2: IICS0 = 0010×110B
▲3: IICS0 = 0010×100B
▲4: IICS0 = 0010××00B
△5: IICS0 = 00000001B

Remark ▲: Always generated
△: Generated only when SPIE0 = 1
×: Don't care

(6) Operation when arbitration loss occurs (no communication after arbitration loss)

When the device is used as a master in a multi-master system, read the MSTS0 bit each time interrupt request signal INTIIC0 has occurred to check the arbitration result.

(a) When arbitration loss occurs during transmission of slave address data (when WTIM0 = 1)

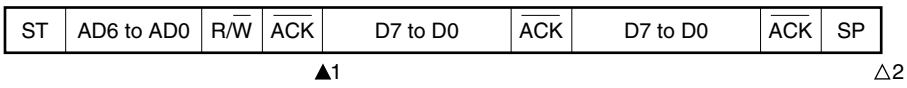

▲1: IICS0 = 01000110B
△2: IICS0 = 00000001B

Remark ▲: Always generated
△: Generated only when SPIE0 = 1

(b) When arbitration loss occurs during transmission of extension code

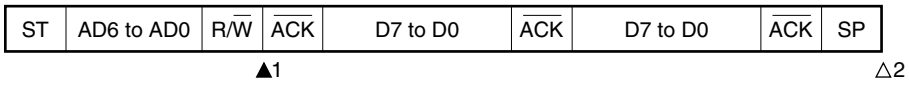

▲1: IICS0 = 0110×010B

Sets LREL0 = 1 by software

△2: IICS0 = 00000001B

Remark ▲: Always generated

△: Generated only when SPIE0 = 1

×: Don't care

(c) When arbitration loss occurs during transmission of data

(i) When WTIM0 = 0

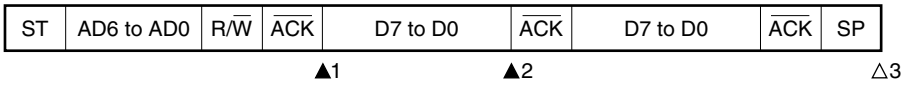

▲1: IICS0 = 10001110B

▲2: IICS0 = 01000000B

△3: IICS0 = 00000001B

Remark ▲: Always generated

△: Generated only when SPIE0 = 1

(ii) When WTIM0 = 1

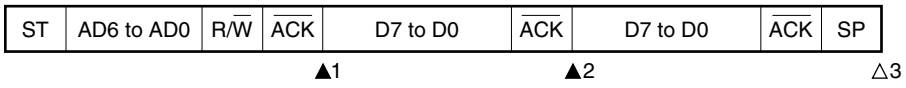

▲1: IICS0 = 10001110B
▲2: IICS0 = 01000100B
△3: IICS0 = 00000001B

Remark ▲: Always generated
△: Generated only when SPIE0 = 1

(d) When loss occurs due to restart condition during data transfer

(i) Not extension code (Example: unmatches with SVA0)

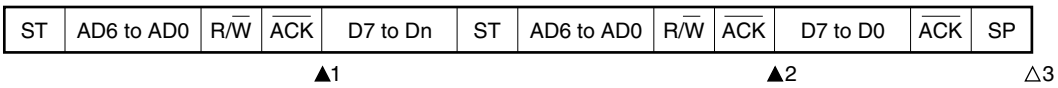

▲1: IICS0 = 1000×110B
▲2: IICS0 = 01000110B
△3: IICS0 = 00000001B

Remark ▲: Always generated
△: Generated only when SPIE0 = 1
×: Don't care
n = 6 to 0

(ii) Extension code

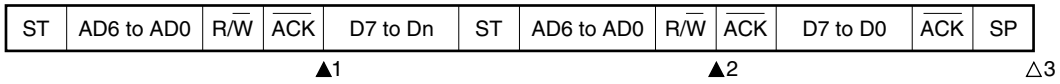

▲1: IICS0 = 1000×110B
▲2: IICS0 = 01100010B
Sets LREL0 = 1 by software
△3: IICS0 = 00000001B

Remark ▲: Always generated
△: Generated only when SPIE0 = 1
×: Don't care
n = 6 to 0

(e) When loss occurs due to stop condition during data transfer

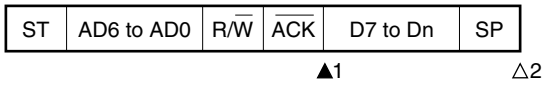

▲1: IICS0 = 10000110B
△2: IICS0 = 01000001B

Remark ▲: Always generated
△: Generated only when SPIE0 = 1
×: Don't care
n = 6 to 0

(f) When arbitration loss occurs due to low-level data when attempting to generate a restart condition

(i) When WTIM0 = 0

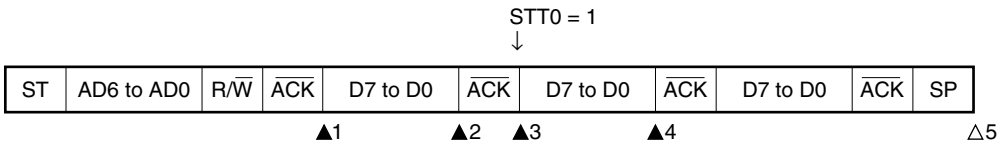

▲1: IICS0 = 1000×110B
▲2: IICS0 = 1000×000B (Sets WTIM0 to 1)
▲3: IICS0 = 1000×100B (Clears WTIM0 to 0)
▲4: IICS0 = 01000000B
△5: IICS0 = 00000001B

Remark ▲: Always generated
△: Generated only when SPIE0 = 1
×: Don't care

(ii) When WTIM0 = 1

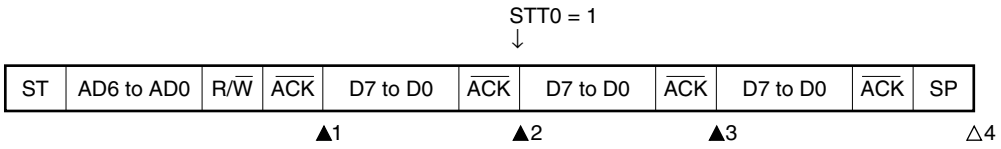

▲1: IICS0 = 1000×110B
▲2: IICS0 = 1000×100B (Sets STT0 to 1)
▲3: IICS0 = 01000100B
△4: IICS0 = 00000001B

Remark ▲: Always generated
△: Generated only when SPIE0 = 1
×: Don't care

(g) When arbitration loss occurs due to a stop condition when attempting to generate a restart condition

(i) When WTIM0 = 0

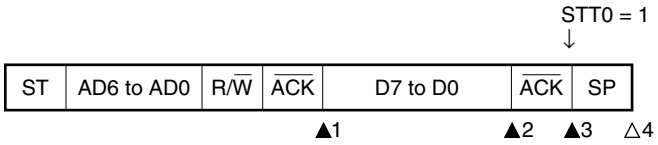

▲1: IICS0 = 1000×110B
▲2: IICS0 = 1000×000B (Sets WTIM0 to 1)
▲3: IICS0 = 1000××00B (Sets STT0 to 1)
△4: IICS0 = 01000001B

Remark ▲: Always generated
△: Generated only when SPIE0 = 1
×: Don't care

(ii) When WTIM0 = 1

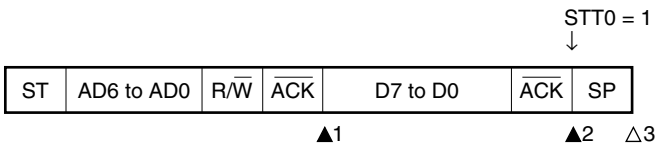

▲1: IICS0 = 1000×110B
▲2: IICS0 = 1000××00B (Sets STT0 to 1)
△3: IICS0 = 01000001B

Remark ▲: Always generated
△: Generated only when SPIE0 = 1
×: Don't care

(h) When arbitration loss occurs due to low-level data when attempting to generate a stop condition

(i) When WTIM0 = 0

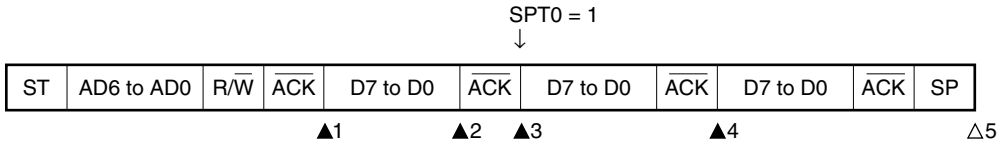

▲1: IICS0 = 1000×110B
▲2: IICS0 = 1000×000B (Sets WTIM0 to 1)
▲3: IICS0 = 1000×100B (Clears WTIM0 to 0)
▲4: IICS0 = 01000100B
△5: IICS0 = 00000001B

Remark ▲: Always generated
△: Generated only when SPIE0 = 1
×: Don't care

(ii) When WTIM0 = 1

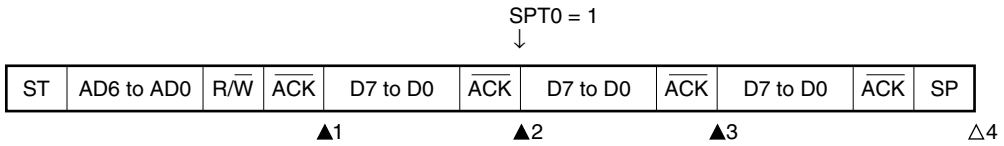

▲1: IICS0 = 1000×110B
▲2: IICS0 = 1000×100B (Sets SPT0 to 1)
▲3: IICS0 = 01000100B
△4: IICS0 = 00000001B

Remark ▲: Always generated
△: Generated only when SPIE0 = 1
×: Don't care

18.6 Timing Charts

When using the I^2C bus mode, the master device outputs an address via the serial bus to select one of several slave devices as its communication partner.

After outputting the slave address, the master device transmits the TRC0 bit (bit 3 of IIC status register 0 (IICS0)), which specifies the data transfer direction, and then starts serial communication with the slave device.

Figures 18-27 and 18-28 show timing charts of the data communication.

IIC shift register 0 (IIC0)'s shift operation is synchronized with the falling edge of the serial clock (SCL0). The transmit data is transferred to the SO0 latch and is output (MSB first) via the SDA0 pin.

Data input via the SDA0 pin is captured into IIC0 at the rising edge of SCL0.

Figure 18-27. Example of Master to Slave Communication (When 9-Clock Wait Is Selected for Both Master and Slave) (1/3)

(1) Start condition ~ address

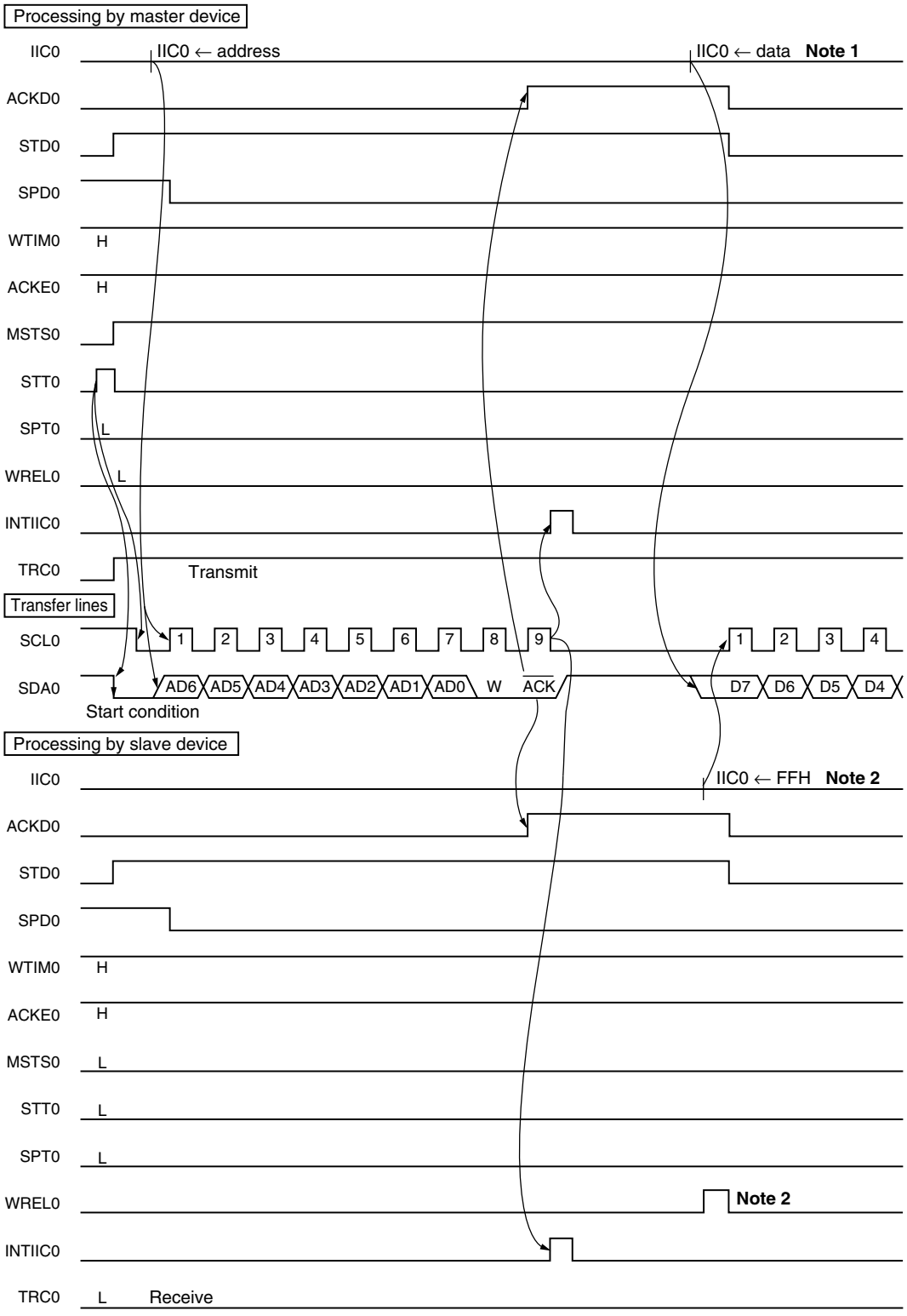

Notes 1. Write data to IIC0, not setting WREL0, in order to cancel a wait state during master transmission.

2. To cancel slave wait, write “FFH” to IIC0 or set WREL0.

Figure 18-27. Example of Master to Slave Communication
(When 9-Clock Wait Is Selected for Both Master and Slave) (2/3)

(2) Data

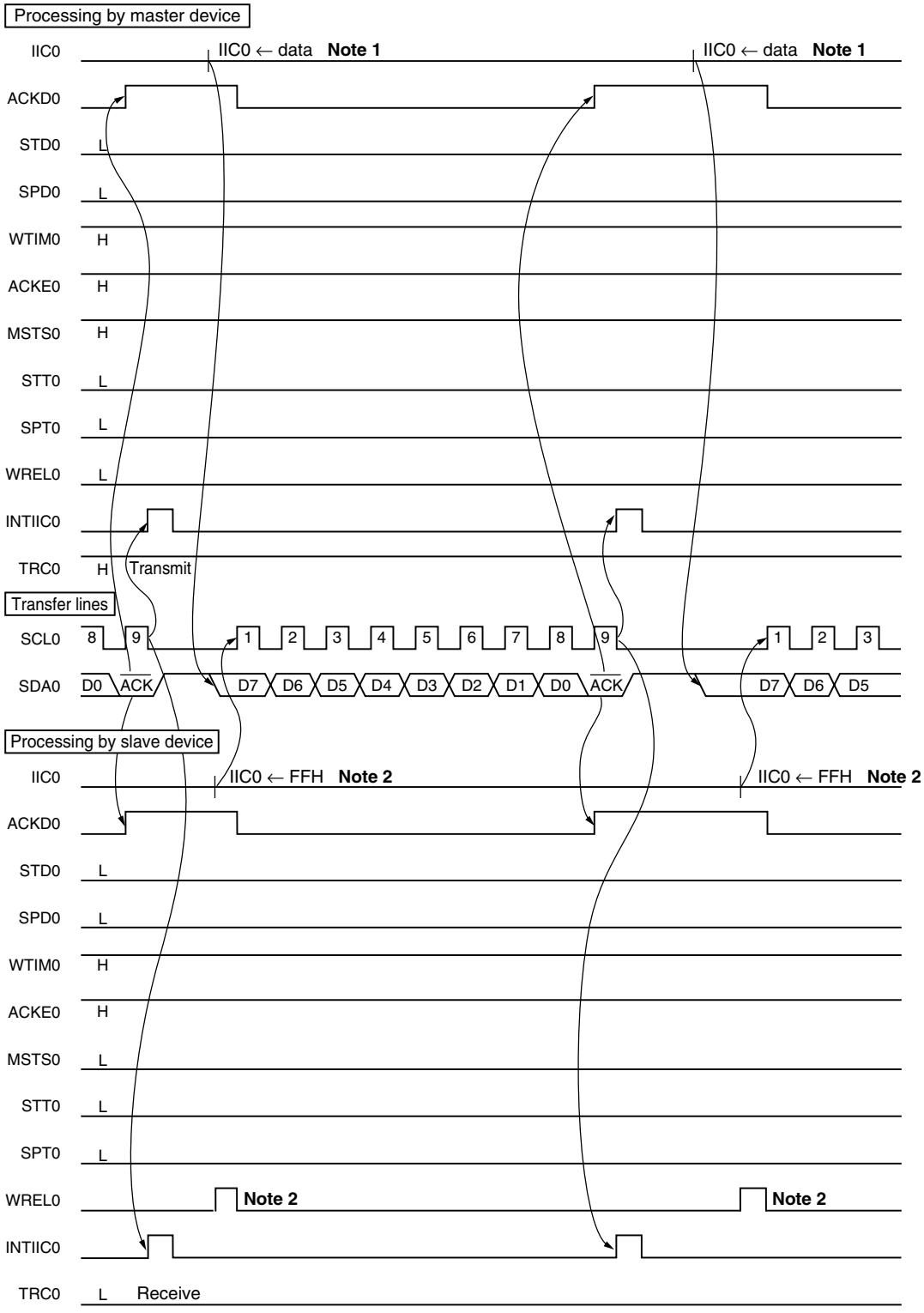

Notes 1. Write data to IIC0, not setting WREL0, in order to cancel a wait state during master transmission.

2. To cancel slave wait, write “FFH” to IIC0 or set WREL0.

Figure 18-27. Example of Master to Slave Communication
(When 9-Clock Wait Is Selected for Both Master and Slave) (3/3)

(3) Stop condition

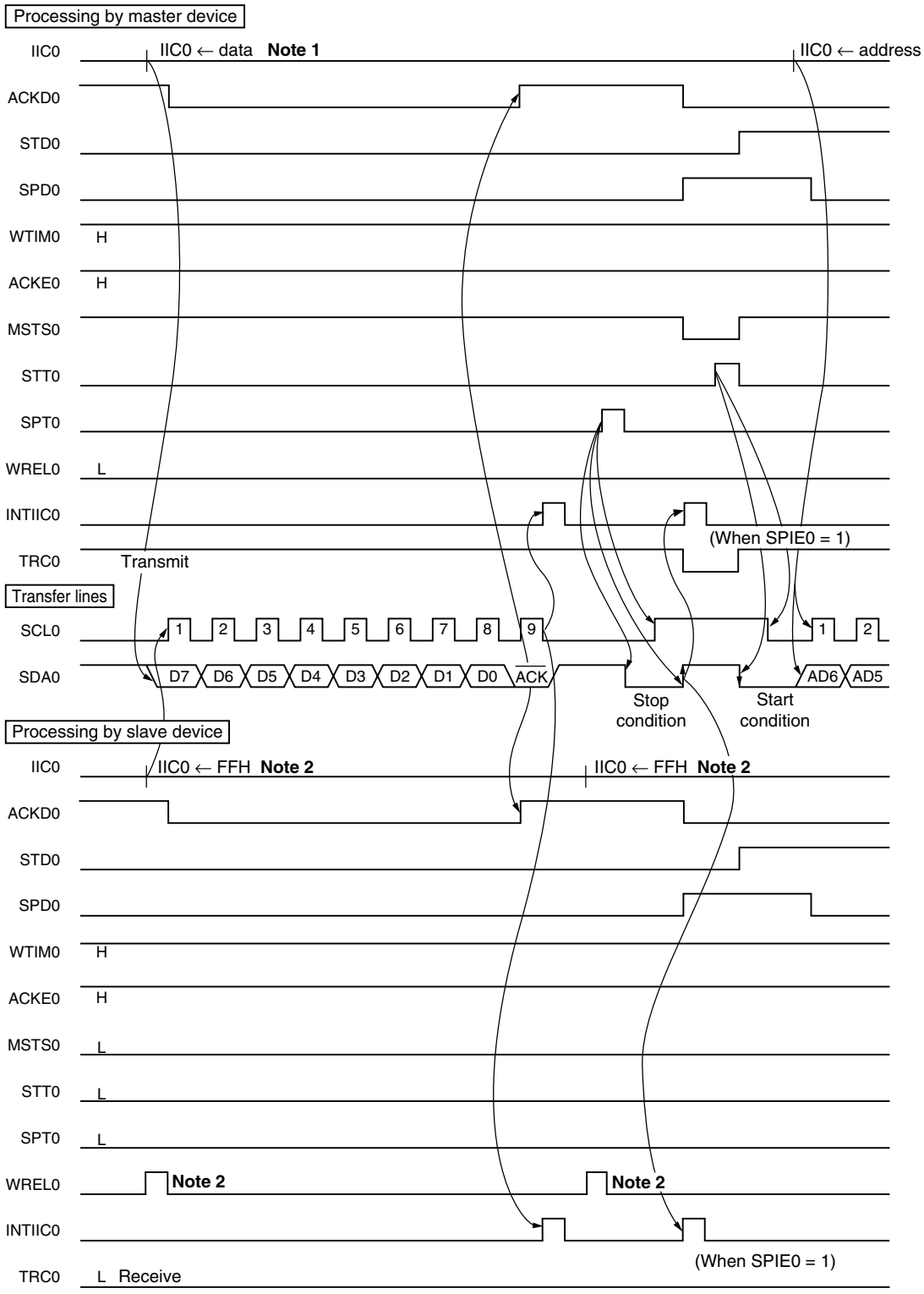

Notes 1. Write data to IIC0, not setting WREL0, in order to cancel a wait state during master transmission.

2. To cancel slave wait, write “FFH” to IIC0 or set WREL0.

Figure 18-28. Example of Slave to Master Communication
(When 8-Clock Wait Is Selected for Master, 9-Clock Wait Is Selected for Slave) (1/3)

(1) Start condition ~ address

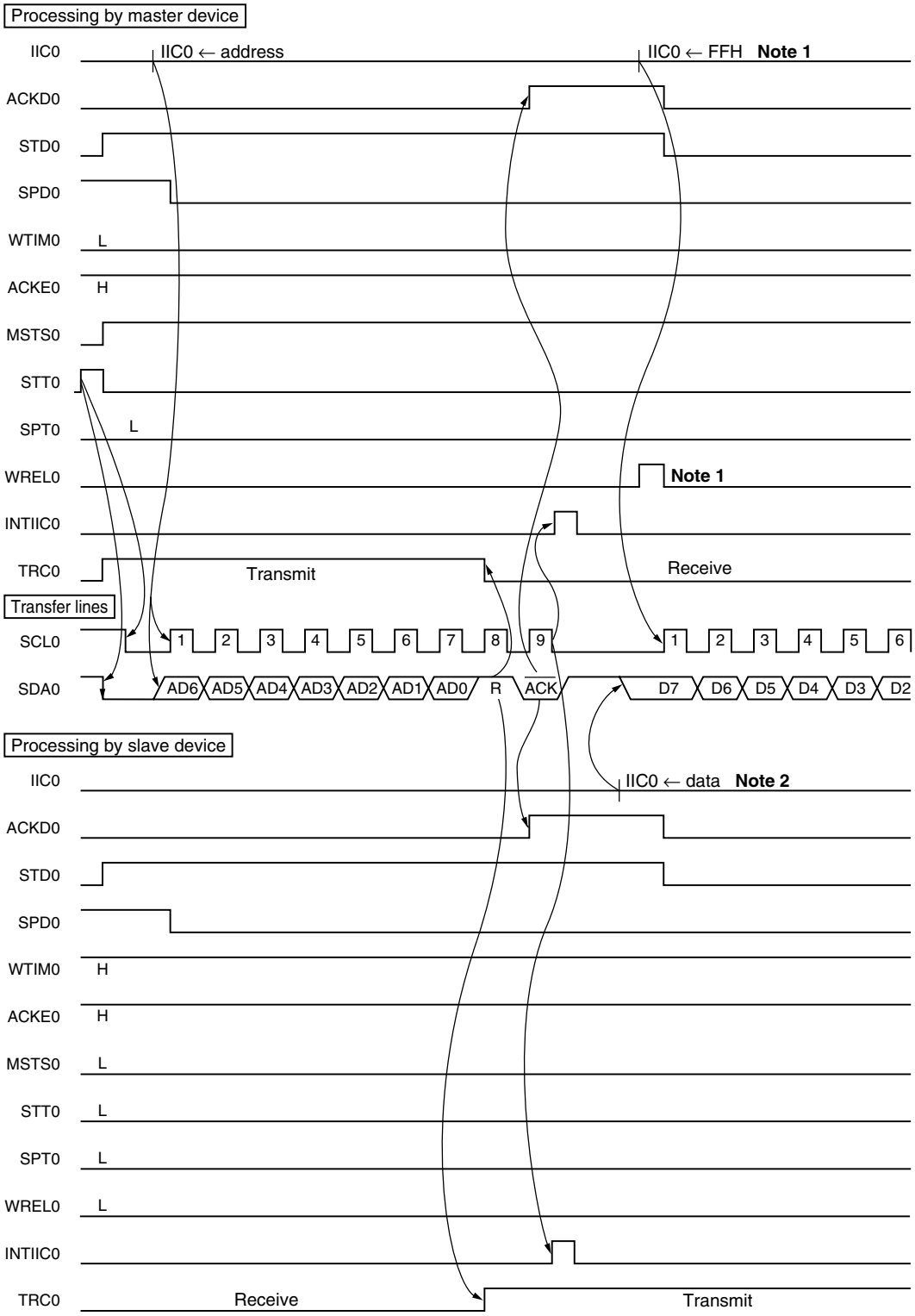

Notes 1. To cancel master wait, write “FFH” to IIC0 or set WREL0.

2. Write data to IIC0, not setting WREL0, in order to cancel a wait state during slave transmission.

Figure 18-28. Example of Slave to Master Communication
(When 8-Clock Wait Is Selected for Master, 9-Clock Wait Is Selected for Slave) (2/3)

(2) Data

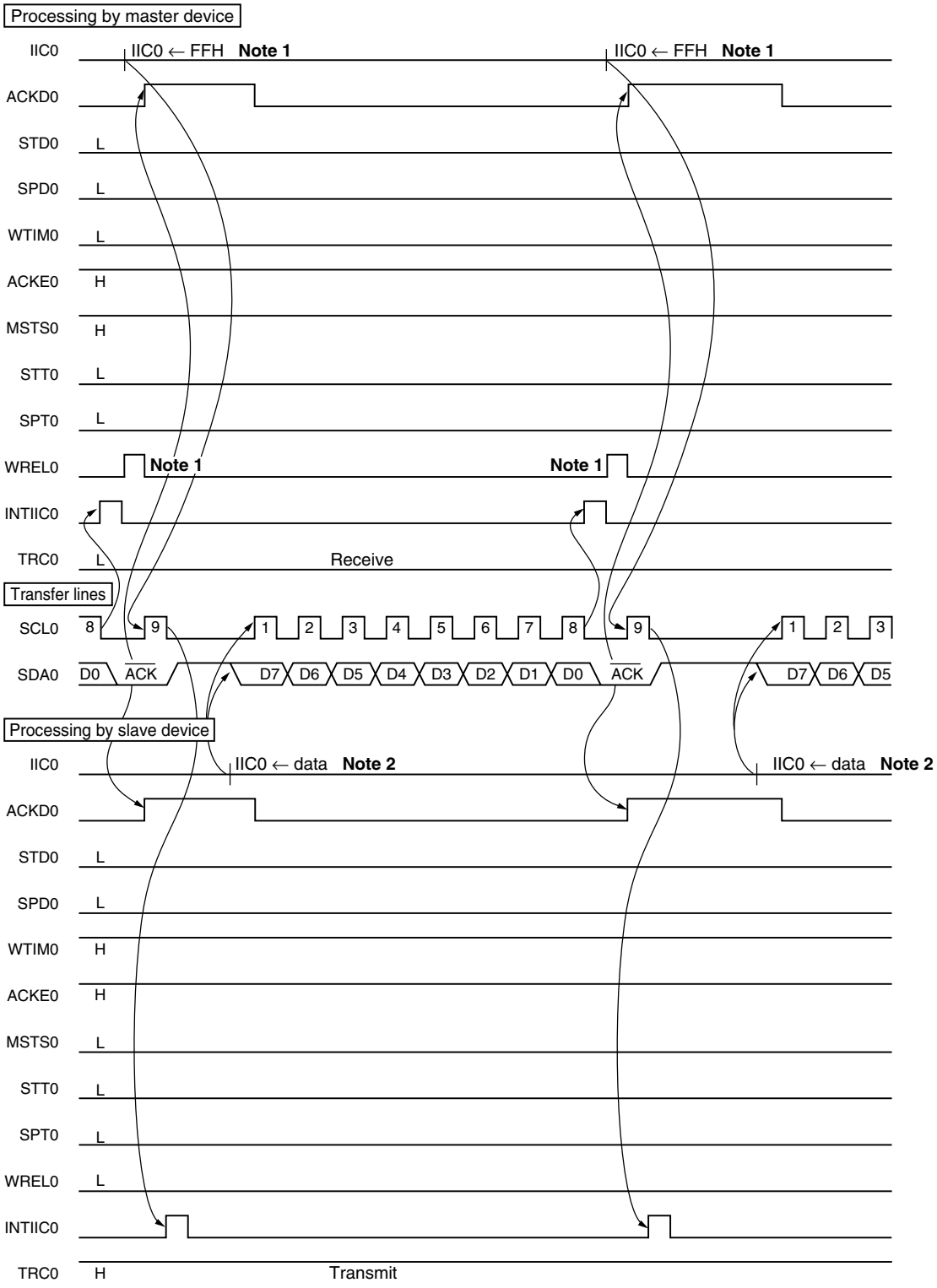

Notes 1. To cancel master wait, write “FFH” to IIC0 or set WREL0.

2. Write data to IIC0, not setting WREL0, in order to cancel a wait state during slave transmission.

Figure 18-28. Example of Slave to Master Communication
(When 8-Clock and 9-Clock Wait Is Selected for Master, 9-Clock Wait Is Selected for Slave) (3/3)

(3) Stop condition

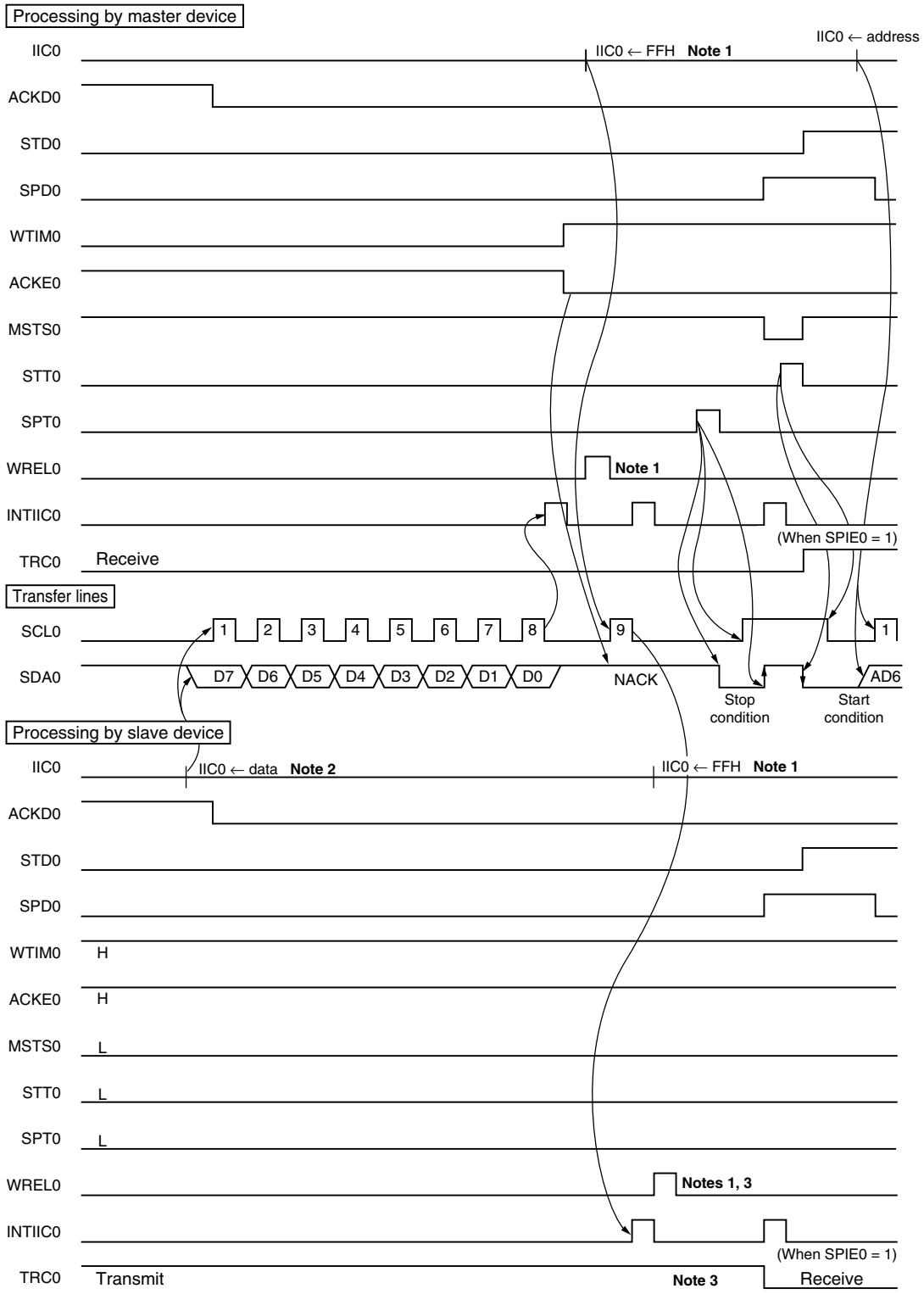

Notes 1. To cancel wait, write “FFH” to IIC0 or set WREL0.

2. Write data to IIC0, not setting WREL0, in order to cancel a wait state during slave transmission.

3. If a wait state during slave transmission is canceled by setting WREL0, TRC0 will be cleared.

CHAPTER 19 MULTIPLIER/DIVIDER

	78K0/KB2	78K0/KC2	78K0/KD2	78K0/KE2	78K0/KF2
Multiplier/divider	–	Products whose flash memory is less than 32 KB: – Products whose flash memory is at least 48 KB: √			

Remark √: Mounted, –: Not mounted

Caution Do not use serial interface IIC0 and the multiplier/divider simultaneously, because various flags corresponding to interrupt request sources are shared among serial interface IIC0 and the multiplier/divider.

19.1 Functions of Multiplier/Divider

The multiplier/divider has the following functions.

- 16 bits × 16 bits = 32 bits (multiplication)
- 32 bits ÷ 16 bits = 32 bits, 16-bit remainder (division)

19.2 Configuration of Multiplier/Divider

The multiplier/divider includes the following hardware.

Table 19-1. Configuration of Multiplier/Divider

Item	Configuration
Registers	Remainder data register 0 (SDR0) Multiplication/division data registers A0 (MDA0H, MDA0L) Multiplication/division data registers B0 (MDB0)
Control register	Multiplier/divider control register 0 (DMUC0)

Figure 19-1 shows the block diagram of the multiplier/divider.

Figure 19-1. Block Diagram of Multiplier/Divider

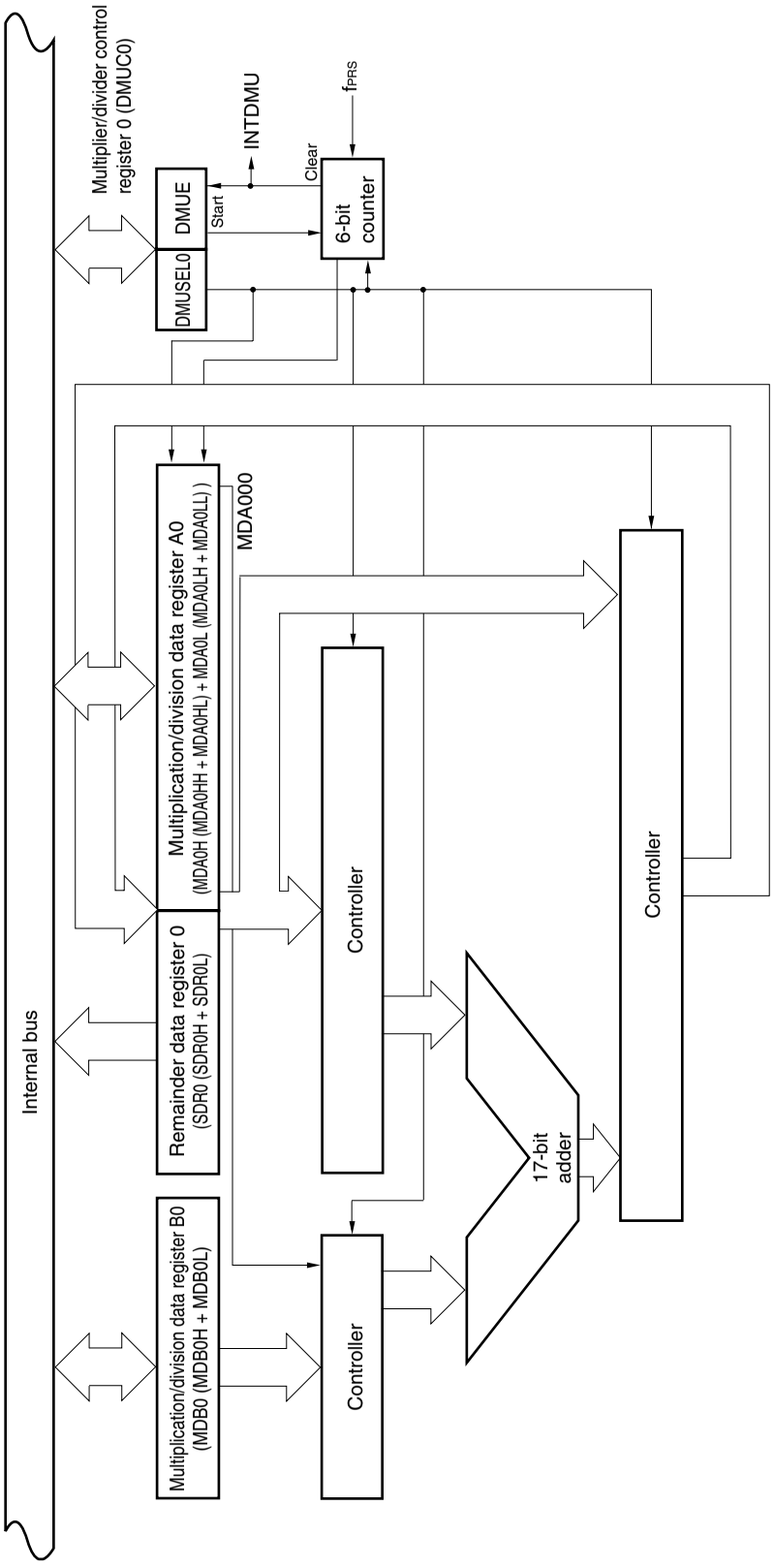

(1) Remainder data register 0 (SDR0)

SDR0 is a 16-bit register that stores a remainder. This register stores 0 in the multiplication mode and the remainder of an operation result in the division mode.

SDR0 can be read by an 8-bit or 16-bit memory manipulation instruction.

Reset signal generation clears SDR0 to 0000H.

Figure 19-2. Format of Remainder Data Register 0 (SDR0)

Address: FF60H, FF61H After reset: 0000H R

Symbol	FF61H (SDR0H)								FF60H (SDR0L)							
SDR0	SDR 015	SDR 014	SDR 013	SDR 012	SDR 011	SDR 010	SDR 009	SDR 008	SDR 007	SDR 006	SDR 005	SDR 004	SDR 003	SDR 002	SDR 001	SDR 000

Cautions 1. The value read from SDR0 during operation processing (while bit 7 (DMUE) of multiplier/divider control register 0 (DMUC0) is 1) is not guaranteed.

2. SDR0 is reset when the operation is started (when DMUE is set to 1).

(2) Multiplication/division data register A0 (MDA0H, MDA0L)

MDA0 is a 32-bit register that sets a 16-bit multiplier A in the multiplication mode and a 32-bit dividend in the division mode, and stores the 32-bit result of the operation (higher 16 bits: MDA0H, lower 16 bits: MDA0L).

Figure 19-3. Format of Multiplication/Division Data Register A0 (MDA0H, MDA0L)

Address: FF62H, FF63H, FF64H, FF65H After reset: 0000H, 0000H R/W

Symbol	FF65H (MDA0HH)								FF64H (MDA0HL)							
MDA0H	MDA 031	MDA 030	MDA 029	MDA 028	MDA 027	MDA 026	MDA 025	MDA 024	MDA 023	MDA 022	MDA 021	MDA 020	MDA 019	MDA 018	MDA 017	MDA 016

Symbol	FF63H (MDA0LH)								FF62H (MDA0LL)							
MDA0L	MDA 015	MDA 014	MDA 013	MDA 012	MDA 011	MDA 010	MDA 009	MDA 008	MDA 007	MDA 006	MDA 005	MDA 004	MDA 003	MDA 002	MDA 001	MDA 000

Cautions 1. MDA0H is cleared to 0 when an operation is started in the multiplication mode (when multiplier/divider control register 0 (DMUC0) is set to 81H).

2. Do not change the value of MDA0 during operation processing (while bit 7 (DMUE) of multiplier/divider control register 0 (DMUC0) is 1). Even in this case, the operation is executed, but the result is undefined.

3. The value read from MDA0 during operation processing (while DMUE is 1) is not guaranteed.

The functions of MDA0 when an operation is executed are shown in the table below.

Table 19-2. Functions of MDA0 During Operation Execution

DMUSEL0	Operation Mode	Setting	Operation Result
0	Division mode	Dividend	Division result (quotient)
1	Multiplication mode	Higher 16 bits: 0, Lower 16 bits: Multiplier A	Multiplication result (product)

Remark DMUSEL0: Bit 0 of multiplier/divider control register 0 (DMUC0)

The register configuration differs between when multiplication is executed and when division is executed, as follows.

- Register configuration during multiplication

  <Multiplier A> <Multiplier B> <Product>

  MDA0 (bits 15 to 0) × MDB0 (bits 15 to 0) = MDA0 (bits 31 to 0)

- Register configuration during division

  <Dividend> <Divisor> <Quotient> <Remainder>

  MDA0 (bits 31 to 0) ÷ MDB0 (bits 15 to 0) = MDA0 (bits 31 to 0) … SDR0 (bits 15 to 0)

MDA0 fetches the calculation result as soon as the clock is input, when bit 7 (DMUE) of multiplier/divider control register 0 (DMUC0) is set to 1.
MDA0H and MDA0L can be set by an 8-bit or 16-bit memory manipulation instruction.
Reset signal generation clears MDA0H and MDA0L to 0000H.

(3) Multiplication/division data register B0 (MDB0)

MDB0 is a register that stores a 16-bit multiplier B in the multiplication mode and a 16-bit divisor in the division mode.
MDB0 can be set by an 8-bit or 16-bit memory manipulation instruction.
Reset signal generation clears MDB0 to 0000H.

Figure 19-4. Format of Multiplication/Division Data Register B0 (MDB0)

Address: FF66H, FF67H After reset: 0000H R/W

Symbol	FF67H (MDB0H)								FF66H (MDB0L)							
MDB0	MDB 015	MDB 014	MDB 013	MDB 012	MDB 011	MDB 010	MDB 009	MDB 008	MDB 007	MDB 006	MDB 005	MDB 004	MDB 003	MDB 002	MDB 001	MDB 000

Cautions 1. Do not change the value of MDB0 during operation processing (while bit 7 (DMUE) of multiplier/divider control register 0 (DMUC0) is 1). Even in this case, the operation is executed, but the result is undefined.

2. Do not clear MDB0 to 0000H in the division mode. If set, undefined operation results are stored in MDA0 and SDR0.

19.3 Register Controlling Multiplier/Divider

The multiplier/divider is controlled by multiplier/divider control register 0 (DMUC0).

(1) Multiplier/divider control register 0 (DMUC0)

DMUC0 is an 8-bit register that controls the operation of the multiplier/divider.

DMUC0 can be set by a 1-bit or 8-bit memory manipulation instruction.

Reset signal generation clears DMUC0 to 00H.

Figure 19-5. Format of Multiplier/Divider Control Register 0 (DMUC0)

Address: FF68H After reset: 00H R/W

Symbol	<7>	6	5	4	3	2	1	0
DMUC0	DMUE	0	0	0	0	0	0	DMUSEL0

DMUE[Note]	Operation start/stop
0	Stops operation
1	Starts operation

DMUSEL0	Operation mode (multiplication/division) selection
0	Division mode
1	Multiplication mode

Note When DMUE is set to 1, the operation is started. DMUE is automatically cleared to 0 after the operation is complete.

Cautions 1. If DMUE is cleared to 0 during operation processing (when DMUE is 1), the operation result is not guaranteed. If the operation is completed while the clearing instruction is being executed, the operation result is guaranteed, provided that the interrupt flag is set.

2. Do not change the value of DMUSEL0 during operation processing (while DMUE is 1). If it is changed, undefined operation results are stored in multiplication/division data register A0 (MDA0) and remainder data register 0 (SDR0).

3. If DMUE is cleared to 0 during operation processing (while DMUE is 1), the operation processing is stopped. To execute the operation again, set multiplication/division data register A0 (MDA0), multiplication/division data register B0 (MDB0), and multiplier/divider control register 0 (DMUC0), and start the operation (by setting DMUE to 1).

19.4 Operations of Multiplier/Divider

19.4.1 Multiplication operation

- Initial setting
  1. Set operation data to multiplication/division data register A0L (MDA0L) and multiplication/division data register B0 (MDB0).
  2. Set bits 0 (DMUSEL0) and 7 (DMUE) of multiplier/divider control register 0 (DMUC0) to 1. Operation will start.
- During operation
  3. The operation will be completed when 16 peripheral hardware clocks (f_{PRS}) have been issued after the start of the operation (intermediate data is stored in the MDA0L and MDA0H registers during operation, and therefore the read values of these registers are not guaranteed).
- End of operation
  4. The operation result data is stored in the MDA0L and MDA0H registers.
  5. DMUE is cleared to 0 (end of operation).
  6. After the operation, an interrupt request signal (INTDMU) is generated.
- Next operation
  7. To execute multiplication next, start from the initial setting in **19.4.1 Multiplication operation**.
  8. To execute division next, start from the initial setting in **19.4.2 Division operation**.

Figure 19-6. Timing Chart of Multiplication Operation (00DAH × 0093H)

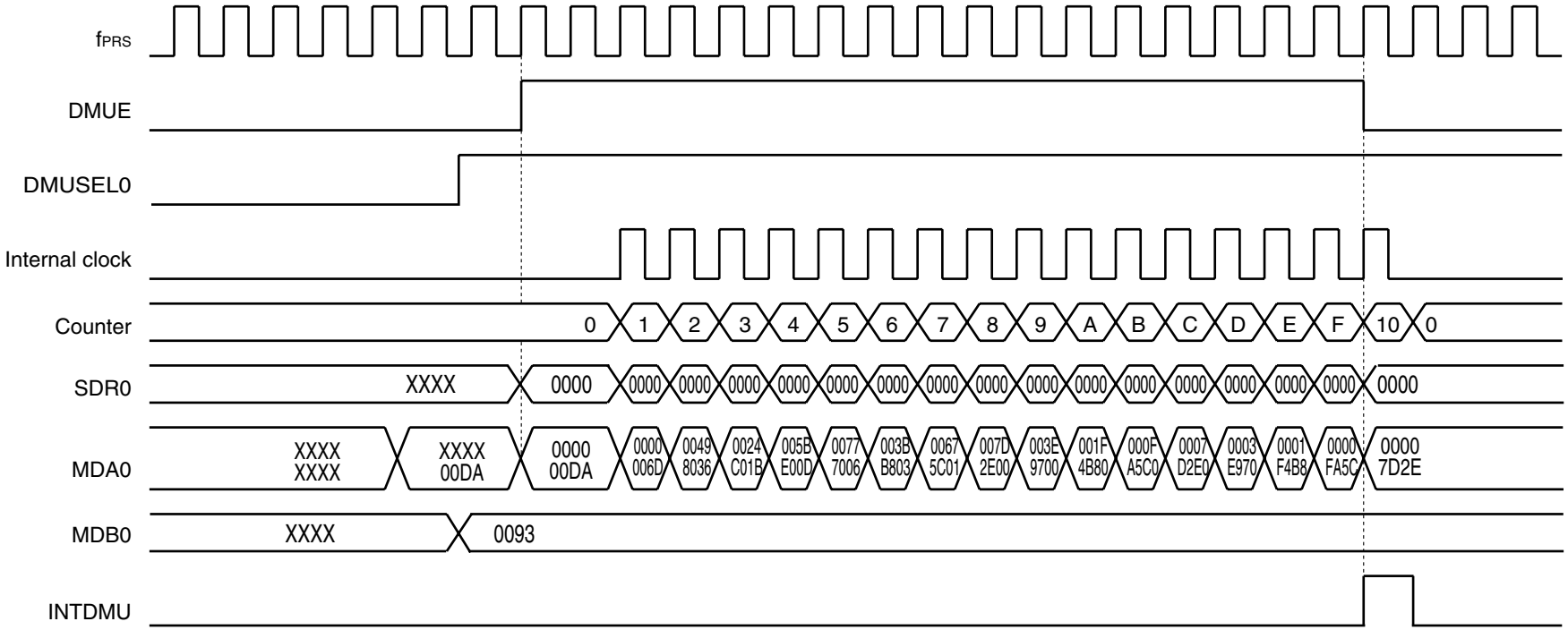

19.4.2 Division operation

- Initial setting
  1. Set operation data to multiplication/division data register A0 (MDA0L and MDA0H) and multiplication/division data register B0 (MDB0).
  2. Set bits 0 (DMUSEL0) and 7 (DMUE) of multiplier/divider control register 0 (DMUC0) to 0 and 1, respectively. Operation will start.
- During operation
  3. The operation will be completed when 32 peripheral hardware clocks (f_{PRS}) have been issued after the start of the operation (intermediate data is stored in the MDA0L and MDA0H registers and remainder data register 0 (SDR0) during operation, and therefore the read values of these registers are not guaranteed).
- End of operation
  4. The result data is stored in the MDA0L, MDA0H, and SDR0 registers.
  5. DMUE is cleared to 0 (end of operation).
  6. After the operation, an interrupt request signal (INTDMU) is generated.
- Next operation
  7. To execute multiplication next, start from the initial setting in **19.4.1 Multiplication operation**.
  8. To execute division next, start from the initial setting in **19.4.2 Division operation**.

Figure 19-7. Timing Chart of Division Operation (DCBA2586H ÷ 0018H)

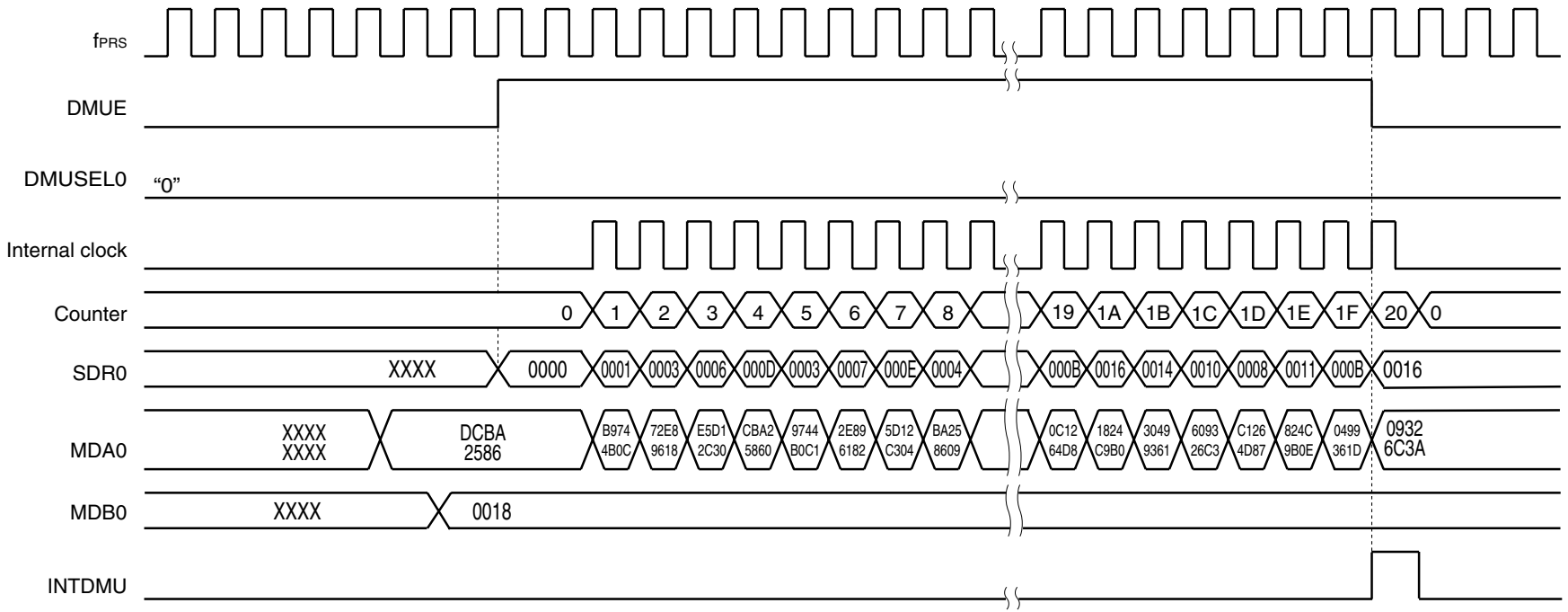

CHAPTER 20 INTERRUPT FUNCTIONS

		78K0/KB2	78K0/KC2	78K0/KD2	78K0/KE2		78K0/KF2
					Products whose flash memory is less than 32 KB	Products whose flash memory is at least 48 KB	
Maskable interrupts	External	6	38/44 pins: 7 ch 48 pins: 8 ch	8	9	9	9
	internal	14	16	16	16	19	20

20.1 Interrupt Function Types

The following two types of interrupt functions are used.

(1) Maskable interrupts

These interrupts undergo mask control. Maskable interrupts can be divided into a high interrupt priority group and a low interrupt priority group by setting the priority specification flag registers (PR0L, PR0H, PR1L, PR1H).

Multiple interrupt servicing can be applied to low-priority interrupts when high-priority interrupts are generated. If two or more interrupt requests, each having the same priority, are simultaneously generated, then they are processed according to the priority of vectored interrupt servicing. For the priority order, see **Table 20-1**.

A standby release signal is generated and STOP and HALT modes are released.

External interrupt requests and internal interrupt requests are provided as maskable interrupts.

(2) Software interrupt

This is a vectored interrupt generated by executing the BRK instruction. It is acknowledged even when interrupts are disabled. The software interrupt does not undergo interrupt priority control.

20.2 Interrupt Sources and Configuration

The interrupt sources consist of maskable interrupts and software interrupts. In addition, they also have up to four reset sources (see **Table 20-1**).

Table 20-1. Interrupt Source List (1/2)

Interrupt Type	Internal/ External	Basic Configuration Type[Note 1]	Default Priority[Note 2]	Interrupt Source		Vector Table Address	KB2	KC2	KD2	KE2	KF2
				Name	Trigger						
Maskable	Internal	(A)	0	INTLVI	Low-voltage detection[Note 3]	0004H	√	√	√	√	√
	External	(B)	1	INTP0	Pin input edge detection	0006H	√	√	√	√	√
			2	INTP1		0008H	√	√	√	√	√
			3	INTP2		000AH	√	√	√	√	√
			4	INTP3		000CH	√	√	√	√	√
			5	INTP4		000EH	√	√	√	√	√
			6	INTP5		0010H	√	√	√	√	√
	Internal	(A)	7	INTSRE6	UART6 reception error generation	0012H	√	√	√	√	√
			8	INTSR6	End of UART6 reception	0014H	√	√	√	√	√
			9	INTST6	End of UART6 transmission	0016H	√	√	√	√	√
			10	INTCSI10/ INTST0	End of CSI10 communication/end of UART0 transmission	0018H	√	√	√	√	√
			11	INTTMH1	Match between TMH1 and CMP01 (when compare register is specified)	001AH	√	√	√	√	√
			12	INTTMH0	Match between TMH0 and CMP00 (when compare register is specified)	001CH	√	√	√	√	√
			13	INTTM50	Match between TM50 and CR50 (when compare register is specified)	001EH	√	√	√	√	√
			14	INTTM000	Match between TM00 and CR000 (when compare register is specified), TI010 pin valid edge detection (when capture register is specified)	0020H	√	√	√	√	√
			15	INTTM010	Match between TM00 and CR010 (when compare register is specified), TI000 pin valid edge detection (when capture register is specified)	0022H	√	√	√	√	√
			16	INTAD	End of A/D conversion	0024H	√	√	√	√	√
			17	INTSR0	End of UART0 reception or reception error generation	0026H	√	√	√	√	√
			18	INTWTI	Watch timer reference time interval signal	0028H	–	√	√	√	√
			19	INTTM51 [Note 4]	Match between TM51 and CR51 (when compare register is specified)	002AH	√	√	√	√	√

Notes 1. Basic configuration types (A) to (D) correspond to (A) to (D) in **Figure 20-1**.

2. The default priority determines the sequence of processing vectored interrupts if two or more maskable interrupts occur simultaneously. Zero indicates the highest priority and 28 indicates the lowest priority.

3. When bit 1 (LVIMD) of the low-voltage detection register (LVIM) is cleared to 0.

4. When 8-bit timer/event counter 51 is used in the carrier generator mode, an interrupt is generated upon the timing when the INTTM5H1 signal is generated (see **Figure 9-13 Transfer Timing**).

Table 20-1. Interrupt Source List (2/2)

Interrupt Type	Internal/ External	Basic Configuration Type[Note 1]	Default Priority[Note 2]	Interrupt Source		Vector Table Address	KB2	KC2	KD2	KE2	KF2
				Name	Trigger						
Maskable	External	(C)	20	INTKR	Key interrupt detection	002CH	–	√	√	√	√
	Internal	(A)	21	INTWT	Watch timer overflow	002EH	–	√	√	√	√
	External	(B)	22	INTP6	Pin input edge detection	0030H	–	√ Note 4	√	√	√
			23	INTP7		0032H	–	–	–	√	√
	Internal	(A)	24	INTIIC0/ INTDMU	End of IIC0 communication/end of multiply/divide operation	0034H	√ Note 5	√ Note 5	√ Note 5	√ Note 5	√
			25	INTCSI11	End of CSI11 communication	0036H	–	–	–	√ Note 6	√
			26	INTTM001	Match between TM01 and CR001 (when compare register is specified), TI011 pin valid edge detection (when capture register is specified)	0038H	–	–	–	√ Note 6	√
			27	INTTM011	Match between TM01 and CR011 (when compare register is specified), TI001 pin valid edge detection (when capture register is specified)	003AH	–	–	–	√ Note 6	√
			28	INTACSI	End of CSIA0 communication	003CH	–	–	–	–	√
Software	–	(D)	–	BRK	BRK instruction execution	003EH	√	√	√	√	√
Reset	–	–	–	RESET	Reset input	0000H	√	√	√	√	√
				POC	Power-on clear						
				LVI	Low-voltage detection[Note 3]						
				WDT	WDT overflow						

Notes 1. Basic configuration types (A) to (D) correspond to (A) to (D) in **Figure 20-1**.

2. The default priority determines the sequence of processing vectored interrupts if two or more maskable interrupts occur simultaneously. Zero indicates the highest priority and 28 indicates the lowest priority.

3. When bit 1 (LVIMD) of the low-voltage detection register (LVIM) is set to 1.

4. 48-pin products only.

5. INTIIC0: products with the flash memory of 32 KB or less
INTIIC0/INTDMU: products with the flash memory of 48 KB or more

6. Products with the flash memory of 48 KB or more only.

Figure 20-1. Basic Configuration of Interrupt Function (1/2)

(A) Internal maskable interrupt

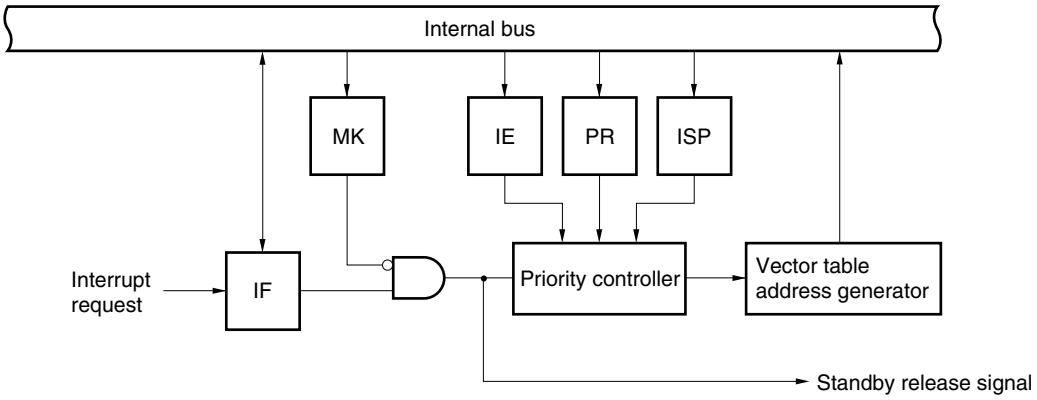

(B) External maskable interrupt (INTPn)

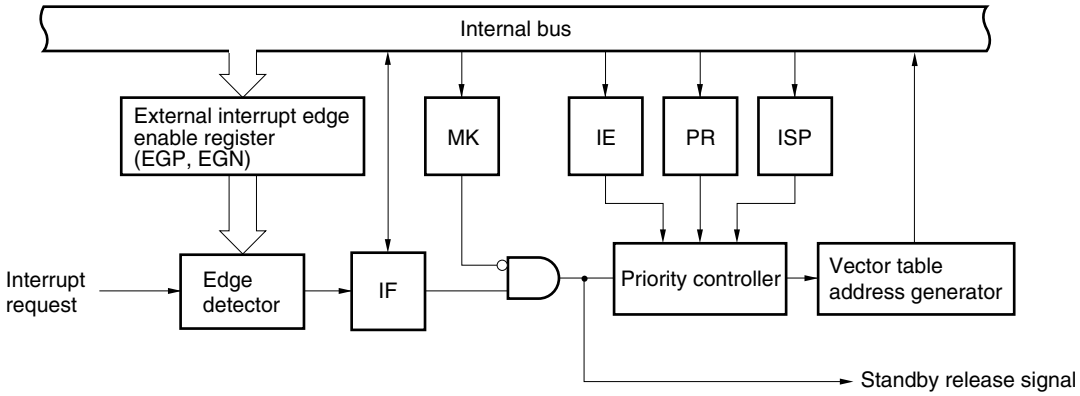

Remark n = 0 to 5: 78K0/KB2, 38-pin and 44-pin products of 78K0/KC2
n = 0 to 6: 78K0/KD2, 48-pin products of 78K0/KC2
n = 0 to 7: 78K0/KE2, 78K0/KF2

IF: Interrupt request flag
IE: Interrupt enable flag
ISP: In-service priority flag
MK: Interrupt mask flag
PR: Priority specification flag

Figure 20-1. Basic Configuration of Interrupt Function (2/2)

<R> **(C) External maskable interrupt (INTKR)**

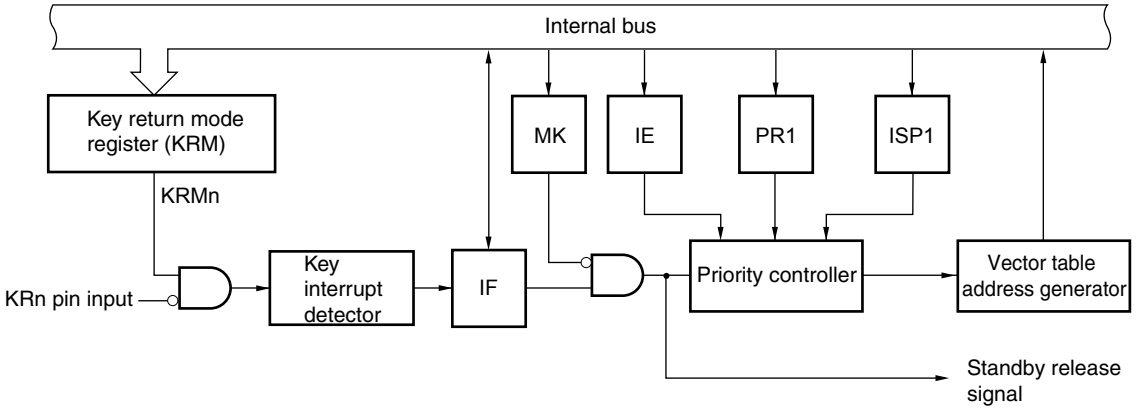

Remark n = 0, 1: 38-pin products of 78K0/KC2
n = 0 to 3: 44-pin and 48-pin products of 78K0/KC2
n = 0 to 7: 78K0/KD2, 78K0/KE2, 78K0/KF2

(D) Software interrupt

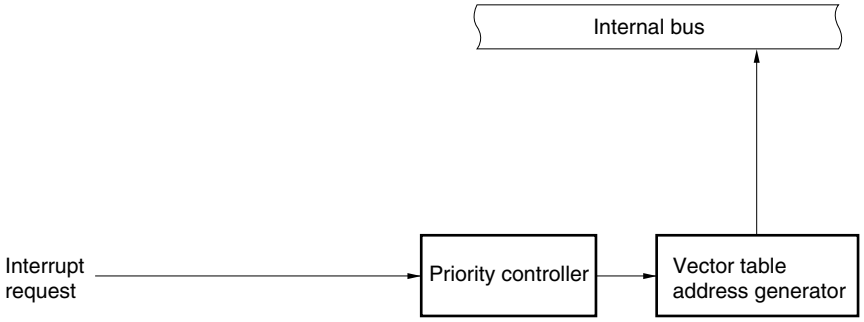

IF: Interrupt request flag
IE: Interrupt enable flag
ISP: In-service priority flag
MK: Interrupt mask flag
PR: Priority specification flag
KRM: Key return mode register

20.3 Registers Controlling Interrupt Functions

The following 6 types of registers are used to control the interrupt functions.

- Interrupt request flag register (IF0L, IF0H, IF1L, IF1H)
- Interrupt mask flag register (MK0L, MK0H, MK1L, MK1H)
- Priority specification flag register (PR0L, PR0H, PR1L, PR1H)
- External interrupt rising edge enable register (EGP)
- External interrupt falling edge enable register (EGN)
- Program status word (PSW)

Table 20-2 shows a list of interrupt request flags, interrupt mask flags, and priority specification flags corresponding to interrupt request sources.

Table 20-2. Flags Corresponding to Interrupt Request Sources (1/2)

KB2	KC2	KD2	KE2	KF2	Interrupt Source	Interrupt Request Flag		Register	Interrupt Mask Flag		Register	Priority Specification Flag		Register
√	√	√	√	√	INTLVI	LVIIF		IF0L	LVIMK		MK0L	LVIPR		PR0L
√	√	√	√	√	INTP0	PIF0			PMK0			PPR0		
√	√	√	√	√	INTP1	PIF1			PMK1			PPR1		
√	√	√	√	√	INTP2	PIF2			PMK2			PPR2		
√	√	√	√	√	INTP3	PIF3			PMK3			PPR3		
√	√	√	√	√	INTP4	PIF4			PMK4			PPR4		
√	√	√	√	√	INTP5	PIF5			PMK5			PPR5		
√	√	√	√	√	INTSRE6	SREIF6			SREMK6			SREPR6		
√	√	√	√	√	INTSR6	SRIF6		IF0H	SRMK6		MK0H	SRPR6		PR0H
√	√	√	√	√	INTST6	STIF6			STMK6			STPR6		
√	√	√	√	√	INTCSI10	CSIIF10 Note 1	DUALIF0 Note 1		CSIMK10 Note 2	DUALMK0 Note 2		CSIPR10 Note 3	DUALPR0 Note 3	
√	√	√	√	√	INTST0	STIF0 Note 1			STMK0 Note 2			STPR0 Note 3		
√	√	√	√	√	INTTMH1	TMIFH1			TMMKH1			TMPRH1		
√	√	√	√	√	INTTMH0	TMIFH0			TMMKH0			TMPRH0		
√	√	√	√	√	INTTM50	TMIF50			TMMK50			TMPR50		
√	√	√	√	√	INTTM000	TMIF000			TMMK000			TMPR000		
√	√	√	√	√	INTTM010	TMIF010			TMMK010			TMPR010		

Notes 1. If either interrupt source INTCSI10 or INTST0 is generated, bit 2 of IF0H is set (1).

2. Bit 2 of MK0H supports both interrupt sources INTCSI10 and INTST0.

3. Bit 2 of PR0H supports both interrupt sources INTCSI10 and INTST0.

Table 20-2. Flags Corresponding to Interrupt Request Sources (2/2)

KB2	KC2	KD2	KE2	KF2	Interrupt Source	Interrupt Request Flag	Register	Interrupt Mask Flag	Register	Priority Specification Flag	Register
√	√	√	√	√	INTAD	ADIF	IF1L	ADMK	MK1L	ADPR	PR1L
√	√	√	√	√	INTSR0	SRIF0		SRMK0		SRPR0	
–	√	√	√	√	INTWTI	WTIIF		WTIMK		WTIPR	
√	√	√	√	√	INTTM51 Note 4	TMIF51		TMMK51		TMPR51	
–	√	√	√	√	INTKR	KRIF		KRMK		KRPR	
–	√	√	√	√	INTWT	WTIF		WTMK		WTPR	
–	√ Note 1	√	√	√	INTP6	PIF6		PMK6		PPR6	
–	√	√	√	√	INTP7	PIF7		PMK7		PPR7	
√ Note 2	√ Note 2	√ Note 2	√ Note 2	√	INTIIC0 Note 5	IICIF0 Note 6	IF1H	IICMK0 Note 7	MK1H	IICPR0 Note 8	PR1H
					INTDMU Note 5	DMUIF Note 6		DMUMK Note 7		DMUPR Note 8	
–	–	–	√ Note 3	√	INTCSI11	CSIIF11		CSIMK11		CSIPR11	
–	–	–	√ Note 3	√	INTTM001	TMIF001		TMMK001		TMPR001	
–	–	–	√ Note 3	√	INTTM011	TMIF011		TMMK011		TMPR011	
–	–	–	–	√	INTACSI	ACSIIF		ACSIMK		ACSIPR	

Notes 1. 48-pin products only.

2. INTIIC0: products whose flash memory is less than 32 KB
INTIIC0/INTDMU: products whose flash memory is at least 48 KB

3. Products whose flash memory is at least 48 KB only.

4. When 8-bit timer/event counter 51 is used in the carrier generator mode, an interrupt is generated upon the timing when the INTTM5H1 signal is generated (see **Figure 9-13 Transfer Timing**).

5. Do not use serial interface IIC0 and multiplier/divider simultaneously, because the flags corresponding to the interrupt request sources of serial interface IIC0 and multiplier/divider support both of these interrupt request sources. If software which operates serial interface IIC0 is developed by CC78K0 which is C compiler, do not select the check box of “Using Multiplier/Divider” on GUI of PM+.

6. If either interrupt source INTIIC0 or INTDMU is generated, bit 0 of IF1H is set (1).

7. Bit 0 of MK1H supports both interrupt sources INTIIC0 and INTDMU.

8. Bit 0 of PR1H supports both interrupt sources INTIIC0 and INTDMU.

(1) Interrupt request flag registers (IF0L, IF0H, IF1L, IF1H)

The interrupt request flags are set to 1 when the corresponding interrupt request is generated or an instruction is executed. They are cleared to 0 when an instruction is executed upon acknowledgment of an interrupt request or upon reset signal generation.

When an interrupt is acknowledged, the interrupt request flag is automatically cleared and then the interrupt routine is entered.

IF0L, IF0H, IF1L, and IF1H are set by a 1-bit or 8-bit memory manipulation instruction. When IF0L and IF0H, and IF1L and IF1H are combined to form 16-bit registers IF0 and IF1, they are set by a 16-bit memory manipulation instruction.

Reset signal generation clears these registers to 00H.

Cautions 1. When operating a timer, serial interface, or A/D converter after standby release, operate it once after clearing the interrupt request flag. An interrupt request flag may be set by noise.

2. When manipulating a flag of the interrupt request flag register, use a 1-bit memory manipulation instruction (CLR1). When describing in C language, use a bit manipulation instruction such as "IF0L.0 = 0;" or "_asm("clr1 IF0L, 0");" because the compiled assembler must be a 1-bit memory manipulation instruction (CLR1).

If a program is described in C language using an 8-bit memory manipulation instruction such as "IF0L &= 0xfe;" and compiled, it becomes the assembler of three instructions.

```
mov a, IF0L
and a, #0FEH
mov IF0L, a
```

In this case, even if the request flag of another bit of the same interrupt request flag register (IF0L) is set to 1 at the timing between "mov a, IF0L" and "mov IF0L, a", the flag is cleared to 0 at "mov IF0L, a". Therefore, care must be exercised when using an 8-bit memory manipulation instruction in C language.

Figure 20-2. Format of Interrupt Request Flag Registers (IF0L, IF0H, IF1L, IF1H) (78K0/KB2)

Address: FFE0H After reset: 00H R/W

Symbol	<7>	<6>	<5>	<4>	<3>	<2>	<1>	<0>
IF0L	SREIF6	PIF5	PIF4	PIF3	PIF2	PIF1	PIF0	LVIIF

Address: FFE1H After reset: 00H R/W

Symbol	<7>	<6>	<5>	<4>	<3>	<2>	<1>	<0>
IF0H	TMIF010	TMIF000	TMIF50	TMIFH0	TMIFH1	DUALIF0 CSIIF10 STIF0	STIF6	SRIF6

Address: FFE2H After reset: 00H R/W

Symbol	7	6	5	4	<3>	2	<1>	<0>
IF1L	0	0	0	0	TMIF51	0	SRIF0	ADIF

Address: FFE3H After reset: 00H R/W

Symbol	7	6	5	4	3	2	1	<0>
IF1H	0	0	0	0	0	0	0	IICIF0

XXIFX	Interrupt request flag
0	No interrupt request signal is generated
1	Interrupt request is generated, interrupt request status

Caution Be sure to clear bits 2, 4 to 7 of IF1L and bits 1 to 7 of IF1H to 0.

Figure 20-3. Format of Interrupt Request Flag Registers (IF0L, IF0H, IF1L, IF1H) (78K0/KC2)

Address: FFE0H After reset: 00H R/W

Symbol	<7>	<6>	<5>	<4>	<3>	<2>	<1>	<0>
IF0L	SREIF6	PIF5	PIF4	PIF3	PIF2	PIF1	PIF0	LVIIF

Address: FFE1H After reset: 00H R/W

Symbol	<7>	<6>	<5>	<4>	<3>	<2>	<1>	<0>
IF0H	TMIF010	TMIF000	TMIF50	TMIFH0	TMIFH1	DUALIF0 CSIIF10 STIF0	STIF6	SRIF6

Address: FFE2H After reset: 00H R/W

Symbol	7	<6>	<5>	<4>	<3>	<2>	<1>	<0>
IF1L	0	PIF6 Note 1	WTIF	KRIF	TMIF51	WTIIF	SRIF0	ADIF

Address: FFE3H After reset: 00H R/W

Symbol	7	6	5	4	3	2	1	<0>
IF1H	0	0	0	0	0	0	0	IICIF0 DMUIF Note 2

XXIFX	Interrupt request flag
0	No interrupt request signal is generated
1	Interrupt request is generated, interrupt request status

Notes 1. 48-pin products only.

2. Products whose flash memory is at least 48 KB only.

Cautions 1. Be sure to clear bits 6 and 7 of IF1L to 0 in the 38-pin and 44-pin products.
Be sure to clear bit 7 of IF1L to 0 in the 48-pin products.

2. Be sure to clear bits 1 to 7 of IF1H to 0.

Figure 20-4. Format of Interrupt Request Flag Registers (IF0L, IF0H, IF1L, IF1H) (78K0/KD2)

Address: FFE0H After reset: 00H R/W

Symbol	<7>	<6>	<5>	<4>	<3>	<2>	<1>	<0>
IF0L	SREIF6	PIF5	PIF4	PIF3	PIF2	PIF1	PIF0	LVIIF

Address: FFE1H After reset: 00H R/W

Symbol	<7>	<6>	<5>	<4>	<3>	<2>	<1>	<0>
IF0H	TMIF010	TMIF000	TMIF50	TMIFH0	TMIFH1	DUALIF0 CSIIF10 STIF0	STIF6	SRIF6

Address: FFE2H After reset: 00H R/W

Symbol	7	<6>	<5>	<4>	<3>	<2>	<1>	<0>
IF1L	0	PIF6	WTIF	KRIF	TMIF51	WTIIF	SRIF0	ADIF

Address: FFE3H After reset: 00H R/W

Symbol	7	6	5	4	3	2	1	<0>
IF1H	0	0	0	0	0	0	0	IICIF0 DMUIF Note

XXIFX	Interrupt request flag
0	No interrupt request signal is generated
1	Interrupt request is generated, interrupt request status

Note Products whose flash memory is at least 48 KB only.

Caution Be sure to clear bit 7 of 1F1L and bits 1 to 7 of IF1H to 0.

Figure 20-5. Format of Interrupt Request Flag Registers (IF0L, IF0H, IF1L, IF1H) (78K0/KE2)

Address: FFE0H After reset: 00H R/W

Symbol	<7>	<6>	<5>	<4>	<3>	<2>	<1>	<0>
IF0L	SREIF6	PIF5	PIF4	PIF3	PIF2	PIF1	PIF0	LVIIF

Address: FFE1H After reset: 00H R/W

Symbol	<7>	<6>	<5>	<4>	<3>	<2>	<1>	<0>
IF0H	TMIF010	TMIF000	TMIF50	TMIFH0	TMIFH1	DUALIF0 CSIIF10 STIF0	STIF6	SRIF6

Address: FFE2H After reset: 00H R/W

Symbol	<7>	<6>	<5>	<4>	<3>	<2>	<1>	<0>
IF1L	PIF7	PIF6	WTIF	KRIF	TMIF51	WTIIF	SRIF0	ADIF

Address: FFE3H After reset: 00H R/W

Symbol	7	6	5	4	<3>	<2>	<1>	<0>
IF1H	0	0	0	0	TMIF011[Note]	TMIF001[Note]	CSIIF11[Note]	IICIF0 DMUIF[Note]

XXIFX	Interrupt request flag
0	No interrupt request signal is generated
1	Interrupt request is generated, interrupt request status

Note Products whose flash memory is at least 48 KB only.

Caution Be sure to clear bits 1 to 7 of IF1H to 0 for the products whose flash memory is less than 32 KB.
Be sure to clear bits 4 to 7 of IF1H to 0 for the products whose flash memory is at least 48 KB.

Figure 20-6. Format of Interrupt Request Flag Registers (IF0L, IF0H, IF1L, IF1H) (78K0/KF2)

Address: FFE0H After reset: 00H R/W

Symbol	<7>	<6>	<5>	<4>	<3>	<2>	<1>	<0>
IF0L	SREIF6	PIF5	PIF4	PIF3	PIF2	PIF1	PIF0	LVIIF

Address: FFE1H After reset: 00H R/W

Symbol	<7>	<6>	<5>	<4>	<3>	<2>	<1>	<0>
IF0H	TMIF010	TMIF000	TMIF50	TMIFH0	TMIFH1	DUALIF0 CSIIF10 STIF0	STIF6	SRIF6

Address: FFE2H After reset: 00H R/W

Symbol	<7>	<6>	<5>	<4>	<3>	<2>	<1>	<0>
IF1L	PIF7	PIF6	WTIF	KRIF	TMIF51	WTIIF	SRIF0	ADIF

Address: FFE3H After reset: 00H R/W

Symbol	7	6	5	<4>	<3>	<2>	<1>	<0>
IF1H	0	0	0	ACSIIF	TMIF011	TMIF001	CSIIF11	IICIF0 DMUIF

XXIFX	Interrupt request flag
0	No interrupt request signal is generated
1	Interrupt request is generated, interrupt request status

Caution Be sure to clear bits 5 to 7 of IF1H to 0.

(2) Interrupt mask flag registers (MK0L, MK0H, MK1L, MK1H)

The interrupt mask flags are used to enable/disable the corresponding maskable interrupt servicing.

MK0L, MK0H, MK1L, and MK1H are set by a 1-bit or 8-bit memory manipulation instruction. When MK0L and MK0H, and MK1L and MK1H are combined to form 16-bit registers MK0 and MK1, they are set by a 16-bit memory manipulation instruction.

Reset signal generation sets these registers to FFH.

Figure 20-7. Format of Interrupt Mask Flag Registers (MK0L, MK0H, MK1L, MK1H) (78K0/KB2)

Address: FFE4H After reset: FFH R/W

Symbol	<7>	<6>	<5>	<4>	<3>	<2>	<1>	<0>
MK0L	SREMK6	PMK5	PMK4	PMK3	PMK2	PMK1	PMK0	LVIMK

Address: FFE5H After reset: FFH R/W

Symbol	<7>	<6>	<5>	<4>	<3>	<2>	<1>	<0>
MK0H	TMMK010	TMMK000	TMMK50	TMMKH0	TMMKH1	DUALMK0 CSIMK10 STMK0	STMK6	SRMK6

Address: FFE6H After reset: FFH R/W

Symbol	7	6	5	4	<3>	2	<1>	<0>
MK1L	1	1	1	1	TMMK51	1	SRMK0	ADMK

Address: FFE7H After reset: FFH R/W

Symbol	7	6	5	4	3	2	1	<0>
MK1H	1	1	1	1	1	1	1	IICMK0

XXMKX	Interrupt servicing control
0	Interrupt servicing enabled
1	Interrupt servicing disabled

Caution Be sure to set bits 2, 4 to 7 of MK1L and bits 1 to 7 of MK1H to 1.

Figure 20-8. Format of Interrupt Mask Flag Registers (MK0L, MK0H, MK1L, MK1H) (78K0/KC2)

Address: FFE4H After reset: FFH R/W

Symbol	<7>	<6>	<5>	<4>	<3>	<2>	<1>	<0>
MK0L	SREMK6	PMK5	PMK4	PMK3	PMK2	PMK1	PMK0	LVIMK

Address: FFE5H After reset: FFH R/W

Symbol	<7>	<6>	<5>	<4>	<3>	<2>	<1>	<0>
MK0H	TMMK010	TMMK000	TMMK50	TMMKH0	TMMKH1	DUALMK0 CSIMK10 STMK0	STMK6	SRMK6

Address: FFE6H After reset: FFH R/W

Symbol	7	<6>	<5>	<4>	<3>	<2>	<1>	<0>
MK1L	1	PMK6[Note 1]	WTMK	KRMK	TMMK51	WTIMK	SRMK0	ADMK

Address: FFE7H After reset: FFH R/W

Symbol	7	6	5	4	3	2	1	<0>
MK1H	1	1	1	1	1	1	1	IICMK0 DMUMK[Note 2]

XXMKX	Interrupt servicing control
0	Interrupt servicing enabled
1	Interrupt servicing disabled

Notes 1. 48-pin products only.

2. Products whose flash memory is at least 48 KB only.

Cautions 1. Be sure to set bits 6 and 7 of MK1L to 1 in the 38-pin and 44-pin products.
Be sure to set bit 7 of MK1L to 1 in the 48-pin products.

2. Be sure to set bits 1 to 7 of MK1H to 1.

Figure 20-9. Format of Interrupt Mask Flag Registers (MK0L, MK0H, MK1L, MK1H) (78K0/KD2)

Address: FFE4H After reset: FFH R/W

Symbol	<7>	<6>	<5>	<4>	<3>	<2>	<1>	<0>
MK0L	SREMK6	PMK5	PMK4	PMK3	PMK2	PMK1	PMK0	LVIMK

Address: FFE5H After reset: FFH R/W

Symbol	<7>	<6>	<5>	<4>	<3>	<2>	<1>	<0>
MK0H	TMMK010	TMMK000	TMMK50	TMMKH0	TMMKH1	DUALMK0 CSIMK10 STMK0	STMK6	SRMK6

Address: FFE6H After reset: FFH R/W

Symbol	7	<6>	<5>	<4>	<3>	<2>	<1>	<0>
MK1L	1	PMK6	WTMK	KRMK	TMMK51	WTIMK	SRMK0	ADMK

Address: FFE7H After reset: FFH R/W

Symbol	7	6	5	4	3	2	1	<0>
MK1H	1	1	1	1	1	1	1	IICMK0 DMUMK[Note]

XXMKX	Interrupt servicing control
0	Interrupt servicing enabled
1	Interrupt servicing disabled

Note Products whose flash memory is at least 48 KB only.

Caution Be sure to set bit 7 of MK1L and bits 1 to 7 of MK1H to 1.

Figure 20-10. Format of Interrupt Mask Flag Registers (MK0L, MK0H, MK1L, MK1H) (78K0/KE2)

Address: FFE4H After reset: FFH R/W

Symbol	<7>	<6>	<5>	<4>	<3>	<2>	<1>	<0>
MK0L	SREMK6	PMK5	PMK4	PMK3	PMK2	PMK1	PMK0	LVIMK

Address: FFE5H After reset: FFH R/W

Symbol	<7>	<6>	<5>	<4>	<3>	<2>	<1>	<0>
MK0H	TMMK010	TMMK000	TMMK50	TMMKH0	TMMKH1	DUALMK0 CSIMK10 STMK0	STMK6	SRMK6

Address: FFE6H After reset: FFH R/W

Symbol	<7>	<6>	<5>	<4>	<3>	<2>	<1>	<0>
MK1L	PMK7	PMK6	WTMK	KRMK	TMMK51	WTIMK	SRMK0	ADMK

Address: FFE7H After reset: FFH R/W

Symbol	7	6	5	4	<3>	<2>	<1>	<0>
MK1H	1	1	1	1	TMMK011[Note]	TMMK001[Note]	CSIMK11[Note]	IICMK0 DMUMK[Note]

XXMKX	Interrupt servicing control
0	Interrupt servicing enabled
1	Interrupt servicing disabled

Note Products whose flash memory is at least 48 KB only.

Caution Be sure to set bits 1 to 7 of MK1H to 1 for the products whose flash memory is less than 32 KB. Be sure to set bits 4 to 7 of MK1H to 1 for the products whose flash memory is at least 48 KB.

Figure 20-11. Format of Interrupt Mask Flag Registers (MK0L, MK0H, MK1L, MK1H) (78K0/KF2)

Address: FFE4H After reset: FFH R/W

Symbol	<7>	<6>	<5>	<4>	<3>	<2>	<1>	<0>
MK0L	SREMK6	PMK5	PMK4	PMK3	PMK2	PMK1	PMK0	LVIMK

Address: FFE5H After reset: FFH R/W

Symbol	<7>	<6>	<5>	<4>	<3>	<2>	<1>	<0>
MK0H	TMMK010	TMMK000	TMMK50	TMMKH0	TMMKH1	DUALMK0 CSIMK10 STMK0	STMK6	SRMK6

Address: FFE6H After reset: FFH R/W

Symbol	<7>	<6>	<5>	<4>	<3>	<2>	<1>	<0>
MK1L	PMK7	PMK6	WTMK	KRMK	TMMK51	WTIMK	SRMK0	ADMK

Address: FFE7H After reset: FFH R/W

Symbol	7	6	5	<4>	<3>	<2>	<1>	<0>
MK1H	1	1	1	ACSIMK	TMMK011	TMMK001	CSIMK11	IICMK0 DMUMK

XXMKX	Interrupt servicing control
0	Interrupt servicing enabled
1	Interrupt servicing disabled

Caution Be sure to set bits 5 to 7 of MK1H to 1.

(3) Priority specification flag registers (PR0L, PR0H, PR1L, PR1H)

The priority specification flag registers are used to set the corresponding maskable interrupt priority order.

PR0L, PR0H, PR1L, and PR1H are set by a 1-bit or 8-bit memory manipulation instruction. If PR0L and PR0H, and PR1L and PR1H are combined to form 16-bit registers PR0 and PR1, they are set by a 16-bit memory manipulation instruction.

Reset signal generation sets these registers to FFH.

Figure 20-12. Format of Priority Specification Flag Registers (PR0L, PR0H, PR1L, PR1H) (78K0/KB2)

Address: FFE8H After reset: FFH R/W

Symbol	<7>	<6>	<5>	<4>	<3>	<2>	<1>	<0>
PR0L	SREPR6	PPR5	PPR4	PPR3	PPR2	PPR1	PPR0	LVIPR

Address: FFE9H After reset: FFH R/W

Symbol	<7>	<6>	<5>	<4>	<3>	<2>	<1>	<0>
PR0H	TMPR010	TMPR000	TMPR50	TMPRH0	TMPRH1	DUALPR0 CSIPR10 STPR0	STPR6	SRPR6

Address: FFEAH After reset: FFH R/W

Symbol	7	6	5	4	<3>	2	<1>	<0>
PR1L	1	1	1	1	TMPR51	1	SRPR0	ADPR

Address: FFEBH After reset: FFH R/W

Symbol	7	6	5	4	3	2	1	<0>
PR1H	1	1	1	1	1	1	1	IICPR0

XXPRX	Priority level selection
0	High priority level
1	Low priority level

Caution Be sure to set bits 2, 4 to 7 of PR1L and bits 1 to 7 of PR1H to 1.

Figure 20-13. Format of Priority Specification Flag Registers (PR0L, PR0H, PR1L, PR1H) (78K0/KC2)

Address: FFE8H After reset: FFH R/W

Symbol	<7>	<6>	<5>	<4>	<3>	<2>	<1>	<0>
PR0L	SREPR6	PPR5	PPR4	PPR3	PPR2	PPR1	PPR0	LVIPR

Address: FFE9H After reset: FFH R/W

Symbol	<7>	<6>	<5>	<4>	<3>	<2>	<1>	<0>
PR0H	TMPR010	TMPR000	TMPR50	TMPRH0	TMPRH1	DUALPR0 CSIPR10 STPR0	STPR6	SRPR6

Address: FFEAH After reset: FFH R/W

Symbol	7	<6>	<5>	<4>	<3>	<2>	<1>	<0>
PR1L	1	PPR6Note 1	WTPR	KRPR	TMPR51	WTIPR	SRPR0	ADPR

Address: FFEBH After reset: FFH R/W

Symbol	7	6	5	4	3	2	1	<0>
PR1H	1	1	1	1	1	1	1	IICPR0 DMUPRNote 2

XXPRX	Priority level selection
0	High priority level
1	Low priority level

Notes 1. 48-pin products only.

2. Products whose flash memory is at least 48 KB only.

Cautions 1. Be sure to set bits 6 and 7 of PR1L to 1 in the 38-pin and 44-pin products.
Be sure to set bit 7 of PR1L to 1 in the 48-pin products.

2. Be sure to set bits 1 to 7 of PR1H to 1.

Figure 20-14. Format of Priority Specification Flag Registers (PR0L, PR0H, PR1L, PR1H) (78K0/KD2)

Address: FFE8H After reset: FFH R/W

Symbol	<7>	<6>	<5>	<4>	<3>	<2>	<1>	<0>
PR0L	SREPR6	PPR5	PPR4	PPR3	PPR2	PPR1	PPR0	LVIPR

Address: FFE9H After reset: FFH R/W

Symbol	<7>	<6>	<5>	<4>	<3>	<2>	<1>	<0>
PR0H	TMPR010	TMPR000	TMPR50	TMPRH0	TMPRH1	DUALPR0 CSIPR10 STPR0	STPR6	SRPR6

Address: FFEAH After reset: FFH R/W

Symbol	7	<6>	<5>	<4>	<3>	<2>	<1>	<0>
PR1L	1	PPR6	WTPR	KRPR	TMPR51	WTIPR	SRPR0	ADPR

Address: FFEBH After reset: FFH R/W

Symbol	7	6	5	4	3	2	1	<0>
PR1H	1	1	1	1	1	1	1	IICPR0 DMUPR[Note]

XXPRX	Priority level selection
0	High priority level
1	Low priority level

Note Products whose flash memory is at least 48 KB only.

Caution Be sure to set bit 7 of PR1L and bits 1 to 7 of PR1H to 1.

Figure 20-15. Format of Priority Specification Flag Registers (PR0L, PR0H, PR1L, PR1H) (78K0/KE2)

Address: FFE8H After reset: FFH R/W

Symbol	<7>	<6>	<5>	<4>	<3>	<2>	<1>	<0>
PR0L	SREPR6	PPR5	PPR4	PPR3	PPR2	PPR1	PPR0	LVIPR

Address: FFE9H After reset: FFH R/W

Symbol	<7>	<6>	<5>	<4>	<3>	<2>	<1>	<0>
PR0H	TMPR010	TMPR000	TMPR50	TMPRH0	TMPRH1	DUALPR0 CSIPR10 STPR0	STPR6	SRPR6

Address: FFEAH After reset: FFH R/W

Symbol	<7>	<6>	<5>	<4>	<3>	<2>	<1>	<0>
PR1L	PPR7	PPR6	WTPR	KRPR	TMPR51	WTIPR	SRPR0	ADPR

Address: FFEBH After reset: FFH R/W

Symbol	7	6	5	4	<3>	<2>	<1>	<0>
PR1H	1	1	1	1	TMPR011 Note	TMPR001 Note	CSIPR11 Note	IICPR0 DMUPR Note

XXPRX	Priority level selection
0	High priority level
1	Low priority level

Note Products whose flash memory is at least 48 KB only.

Caution Be sure to set bits 1 to 7 of PR1H to 1 for the products whose flash memory is less than 32 KB. Be sure to set bits 4 to 7 of PR1H to 1 for the products whose flash memory is at least 48 KB.

Figure 20-16. Format of Priority Specification Flag Registers (PR0L, PR0H, PR1L, PR1H) (78K0/KF2)

Address: FFE8H After reset: FFH R/W

Symbol	<7>	<6>	<5>	<4>	<3>	<2>	<1>	<0>
PR0L	SREPR6	PPR5	PPR4	PPR3	PPR2	PPR1	PPR0	LVIPR

Address: FFE9H After reset: FFH R/W

Symbol	<7>	<6>	<5>	<4>	<3>	<2>	<1>	<0>
PR0H	TMPR010	TMPR000	TMPR50	TMPRH0	TMPRH1	DUALPR0 CSIPR10 STPR0	STPR6	SRPR6

Address: FFEAH After reset: FFH R/W

Symbol	<7>	<6>	<5>	<4>	<3>	<2>	<1>	<0>
PR1L	PPR7	PPR6	WTPR	KRPR	TMPR51	WTIPR	SRPR0	ADPR

Address: FFEBH After reset: FFH R/W

Symbol	7	6	5	<4>	<3>	<2>	<1>	<0>
PR1H	1	1	1	ACSIPR	TMPR011	TMPR001	CSIPR11	IICPR0 DMUPR

XXPRX	Priority level selection
0	High priority level
1	Low priority level

Caution Be sure to set bits 5 to 7 of PR1H to 1.

(4) External interrupt rising edge enable register (EGP), external interrupt falling edge enable register (EGN)

These registers specify the valid edge for INTPn.

EGP and EGN are set by a 1-bit or 8-bit memory manipulation instruction.

Reset signal generation clears these registers to 00H.

Remark n = 0 to 5: 78K0/KB2, 38-pin and 44-pin products of 78K0/KC2
n = 0 to 6: 78K0/KD2, 48-pin products of 78K0/KC2
n = 0 to 7: 78K0/KE2, 78K0/KF2

Figure 20-17. Format of External Interrupt Rising Edge Enable Register (EGP) and External Interrupt Falling Edge Enable Register (EGN) (1/2)

(1) 78K0/KB2

Address: FF48H After reset: 00H R/W

Symbol	7	6	5	4	3	2	1	0
EGP	0	0	EGP5	EGP4	EGP3	EGP2	EGP1	EGP0

Address: FF49H After reset: 00H R/W

Symbol	7	6	5	4	3	2	1	0
EGN	0	0	EGN5	EGN4	EGN3	EGN2	EGN1	EGN0

(2) 38-pin and 44-pin products of 78K0/KC2

Address: FF48H After reset: 00H R/W

Symbol	7	6	5	4	3	2	1	0
EGP	0	0	EGP5	EGP4	EGP3	EGP2	EGP1	EGP0

Address: FF49H After reset: 00H R/W

Symbol	7	6	5	4	3	2	1	0
EGN	0	0	EGN5	EGN4	EGN3	EGN2	EGN1	EGN0

(3) 48-pin products of 78K0/KC2, 78K0/KD2

Address: FF48H After reset: 00H R/W

Symbol	7	6	5	4	3	2	1	0
EGP	0	EGP6	EGP5	EGP4	EGP3	EGP2	EGP1	EGP0

Address: FF49H After reset: 00H R/W

Symbol	7	6	5	4	3	2	1	0
EGN	0	EGN6	EGN5	EGN4	EGN3	EGN2	EGN1	EGN0

EGPn	EGNn	INTPn pin valid edge selection
0	0	Edge detection disabled
0	1	Falling edge
1	0	Rising edge
1	1	Both rising and falling edges

Caution Be sure to clear bits 6 and 7 of EGP and EGN to 0 in 78K0/KB2, and 38-pin and 44-pin products of 78K0/KC2.
Be sure to clear bit 7 of EGP and EGN to 0 in 78K0/KD2, and 48-pin products of 78K0/KC2.

Remark n = 0 to 5: 78K0/KB2, 38-pin and 44-pin products of 78K0/KC2
n = 0 to 6: 78K0/KD2, 48-pin products of 78K0/KC2

Figure 20-17. Format of External Interrupt Rising Edge Enable Register (EGP) and External Interrupt Falling Edge Enable Register (EGN) (2/2)

(4) 78K0/KE2, 78K0/KF2

Address: FF48H After reset: 00H R/W

Symbol	7	6	5	4	3	2	1	0
EGP	EGP7	EGP6	EGP5	EGP4	EGP3	EGP2	EGP1	EGP0

Address: FF49H After reset: 00H R/W

Symbol	7	6	5	4	3	2	1	0
EGN	EGN7	EGN6	EGN5	EGN4	EGN3	EGN2	EGN1	EGN0

EGPn	EGNn	INTPn pin valid edge selection
0	0	Edge detection disabled
0	1	Falling edge
1	0	Rising edge
1	1	Both rising and falling edges

Remark n = 0 to 7: 78K0/KE2, 78K0/KF2

Table 20-3 shows the ports corresponding to EGPn and EGNn.

Table 20-3. Ports Corresponding to EGPn and EGNn

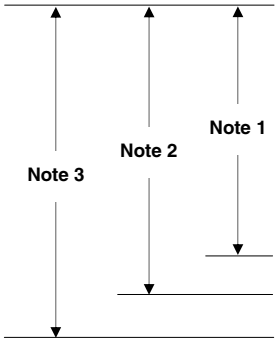

Detection Enable Register		Edge Detection Port	Interrupt Request Signal
EGP0	EGN0	P120	INTP0
EGP1	EGN1	P30	INTP1
EGP2	EGN2	P31	INTP2
EGP3	EGN3	P32	INTP3
EGP4	EGN4	P33	INTP4
EGP5	EGN5	P16	INTP5
EGP6	EGN6	P140	INTP6
EGP7	EGN7	P141	INTP7

Notes 1. 78K0/KB2, and 38-pin and 44-pin products of 78K0/KC2

2. 78K0/KD2, and 48-pin products of 78K0/KC2

3. 78K0/KE2 and 78K0/KF2

Caution Select the port mode by clearing EGPn and EGNn to 0 because an edge may be detected when the external interrupt function is switched to the port function.

Remark n = 0 to 5: 78K0/KB2, 38-pin and 44-pin products of 78K0/KC2
n = 0 to 6: 78K0/KD2, 48-pin products of 78K0/KC2
n = 0 to 7: 78K0/KE2, 78K0/KF2

(5) Program status word (PSW)

The program status word is a register used to hold the instruction execution result and the current status for an interrupt request. The IE flag that sets maskable interrupt enable/disable and the ISP flag that controls multiple interrupt servicing are mapped to the PSW.

Besides 8-bit read/write, this register can carry out operations using bit manipulation instructions and dedicated instructions (EI and DI). When a vectored interrupt request is acknowledged, if the BRK instruction is executed, the contents of the PSW are automatically saved into a stack and the IE flag is reset to 0. If a maskable interrupt request is acknowledged, the contents of the priority specification flag of the acknowledged interrupt are transferred to the ISP flag. The PSW contents are also saved into the stack with the PUSH PSW instruction. They are restored from the stack with the RETI, RETB, and POP PSW instructions.

Reset signal generation sets PSW to 02H.

Figure 20-18. Format of Program Status Word

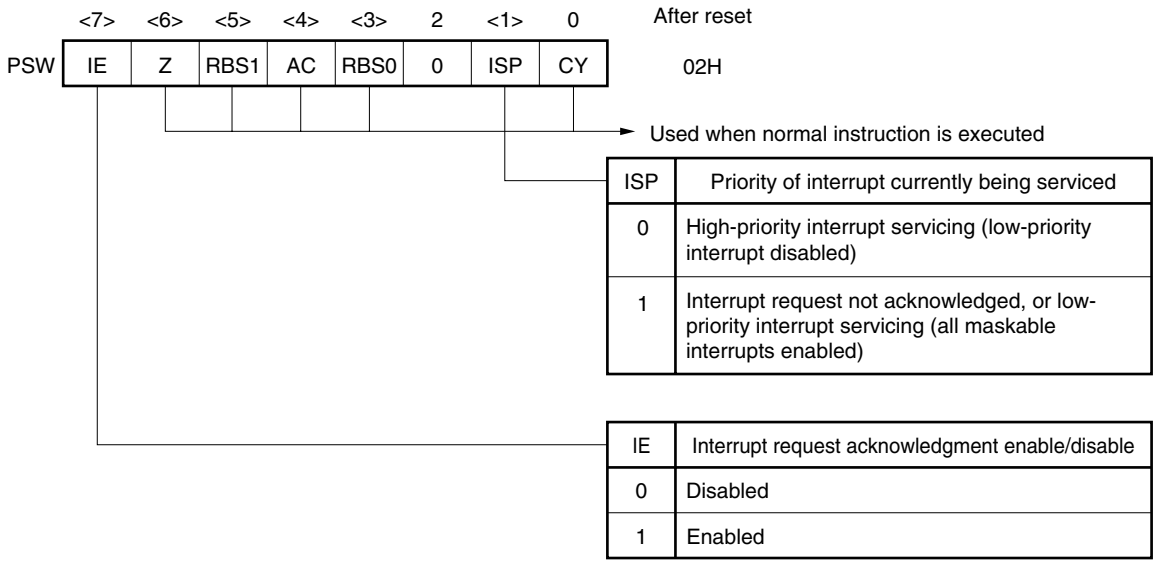

ISP	Priority of interrupt currently being serviced
0	High-priority interrupt servicing (low-priority interrupt disabled)
1	Interrupt request not acknowledged, or low-priority interrupt servicing (all maskable interrupts enabled)

IE	Interrupt request acknowledgment enable/disable
0	Disabled
1	Enabled

20.4 Interrupt Servicing Operations

20.4.1 Maskable interrupt acknowledgment

A maskable interrupt becomes acknowledgeable when the interrupt request flag is set to 1 and the mask (MK) flag corresponding to that interrupt request is cleared to 0. A vectored interrupt request is acknowledged if interrupts are in the interrupt enabled state (when the IE flag is set to 1). However, a low-priority interrupt request is not acknowledged during servicing of a higher priority interrupt request (when the ISP flag is reset to 0).

The times from generation of a maskable interrupt request until vectored interrupt servicing is performed are listed in Table 20-4 below.

For the interrupt request acknowledgment timing, see **Figures 20-20** and **20-21**.

Table 20-4. Time from Generation of Maskable Interrupt Until Servicing

	Minimum Time	Maximum Time[Note]
When ××PR = 0	7 clocks	32 clocks
When ××PR = 1	8 clocks	33 clocks

Note If an interrupt request is generated just before a divide instruction, the wait time becomes longer.

Remark 1 clock: $1/f_{CPU}$ (f_{CPU}: CPU clock)

If two or more maskable interrupt requests are generated simultaneously, the request with a higher priority level specified in the priority specification flag is acknowledged first. If two or more interrupts requests have the same priority level, the request with the highest default priority is acknowledged first.

An interrupt request that is held pending is acknowledged when it becomes acknowledgeable.

Figure 20-19 shows the interrupt request acknowledgment algorithm.

If a maskable interrupt request is acknowledged, the contents are saved into the stacks in the order of PSW, then PC, the IE flag is reset (0), and the contents of the priority specification flag corresponding to the acknowledged interrupt are transferred to the ISP flag. The vector table data determined for each interrupt request is the loaded into the PC and branched.

Restoring from an interrupt is possible by using the RETI instruction.

Figure 20-19. Interrupt Request Acknowledgment Processing Algorithm

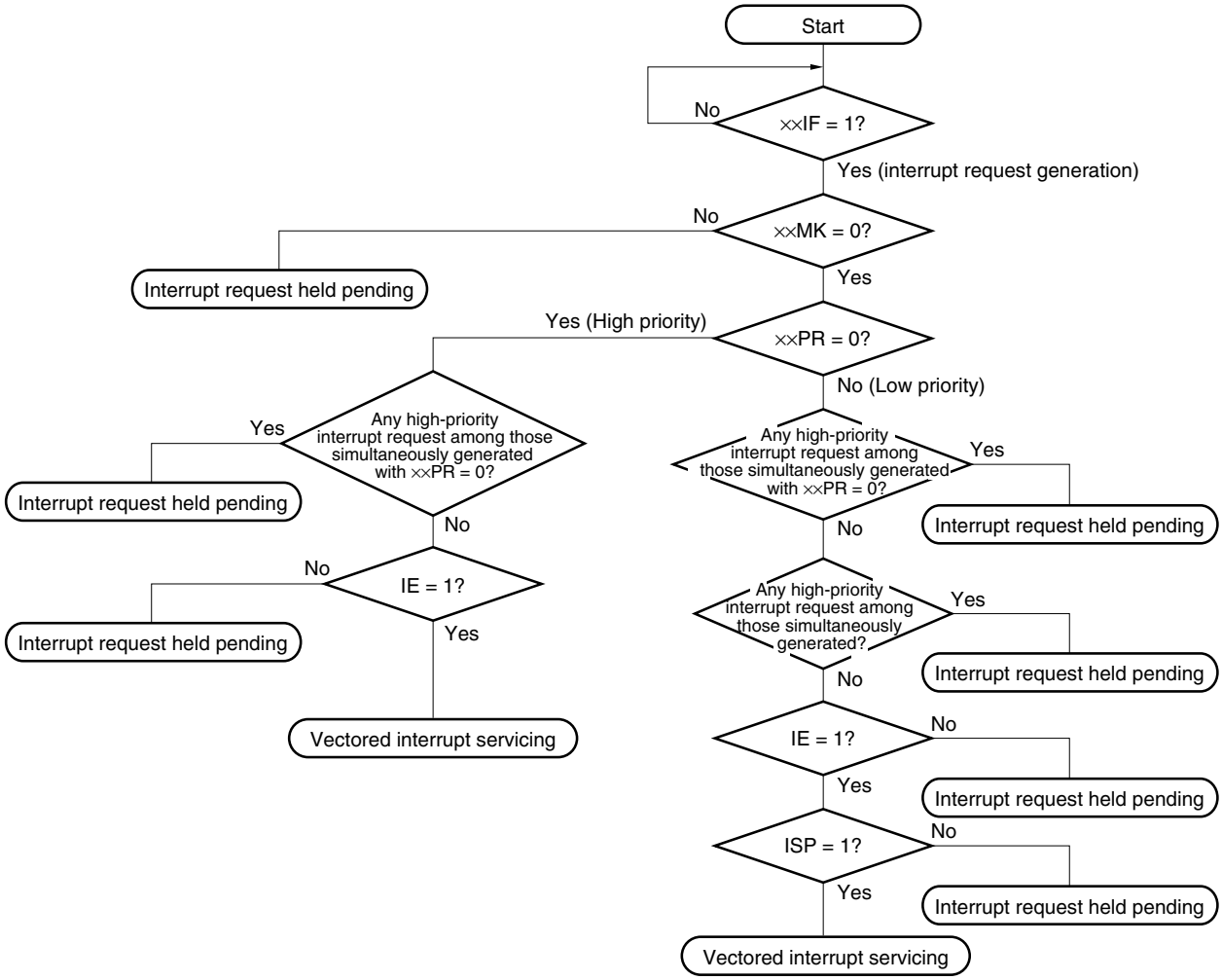

××IF: Interrupt request flag

××MK: Interrupt mask flag

××PR: Priority specification flag

IE: Flag that controls acknowledgment of maskable interrupt request (1 = Enable, 0 = Disable)

ISP: Flag that indicates the priority level of the interrupt currently being serviced (0 = high-priority interrupt servicing, 1 = No interrupt request acknowledged, or low-priority interrupt servicing)

Figure 20-20. Interrupt Request Acknowledgment Timing (Minimum Time)

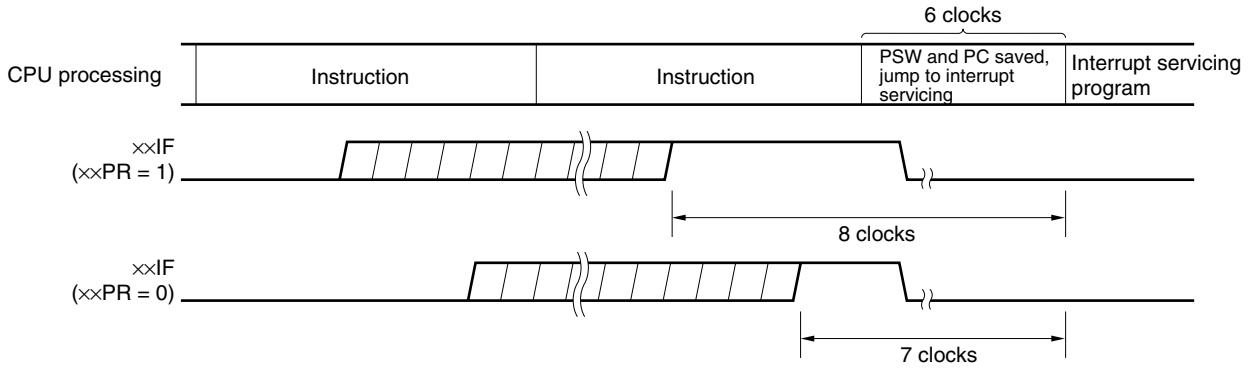

Remark 1 clock: 1/f_{CPU} (f_{CPU}: CPU clock)

Figure 20-21. Interrupt Request Acknowledgment Timing (Maximum Time)

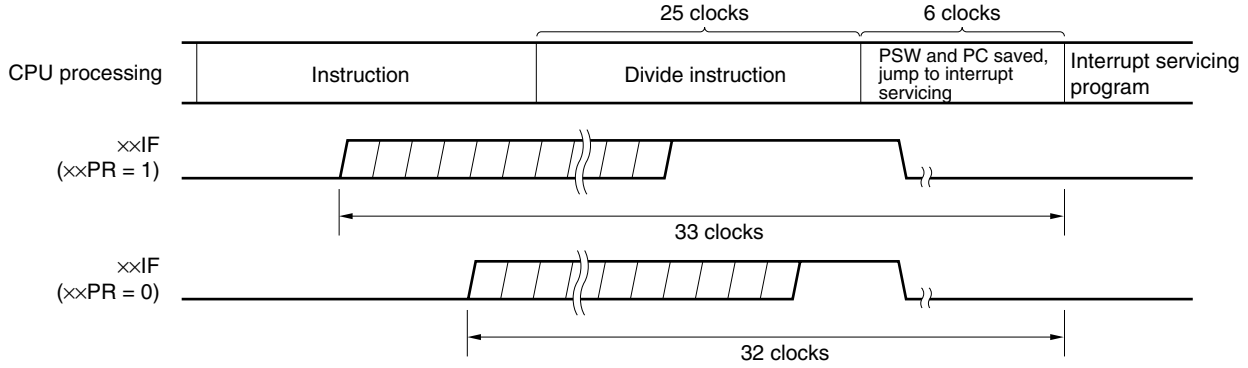

Remark 1 clock: 1/f_{CPU} (f_{CPU}: CPU clock)

20.4.2 Software interrupt request acknowledgment

A software interrupt acknowledge is acknowledged by BRK instruction execution. Software interrupts cannot be disabled.

If a software interrupt request is acknowledged, the contents are saved into the stacks in the order of the program status word (PSW), then program counter (PC), the IE flag is reset (0), and the contents of the vector table (003EH, 003FH) are loaded into the PC and branched.

Restoring from a software interrupt is possible by using the RETB instruction.

Caution Do not use the RETI instruction for restoring from the software interrupt.

20.4.3 Multiple interrupt servicing

Multiple interrupt servicing occurs when another interrupt request is acknowledged during execution of an interrupt.

Multiple interrupt servicing does not occur unless the interrupt request acknowledgment enabled state is selected (IE = 1). When an interrupt request is acknowledged, interrupt request acknowledgment becomes disabled (IE = 0). Therefore, to enable multiple interrupt servicing, it is necessary to set (1) the IE flag with the EI instruction during interrupt servicing to enable interrupt acknowledgment.

Moreover, even if interrupts are enabled, multiple interrupt servicing may not be enabled, this being subject to interrupt priority control. Two types of priority control are available: default priority control and programmable priority control. Programmable priority control is used for multiple interrupt servicing.

In the interrupt enabled state, if an interrupt request with a priority equal to or higher than that of the interrupt currently being serviced is generated, it is acknowledged for multiple interrupt servicing. If an interrupt with a priority lower than that of the interrupt currently being serviced is generated during interrupt servicing, it is not acknowledged for multiple interrupt servicing. Interrupt requests that are not enabled because interrupts are in the interrupt disabled state or because they have a lower priority are held pending. When servicing of the current interrupt ends, the pending interrupt request is acknowledged following execution of at least one main processing instruction execution.

Table 20-5 shows relationship between interrupt requests enabled for multiple interrupt servicing and Figure 20-22 shows multiple interrupt servicing examples.

Table 20-5. Relationship Between Interrupt Requests Enabled for Multiple Interrupt Servicing During Interrupt Servicing

Multiple Interrupt Request / Interrupt Being Serviced		Maskable Interrupt Request				Software Interrupt Request
		PR = 0		PR = 1		
		IE = 1	IE = 0	IE = 1	IE = 0	
Maskable interrupt	ISP = 0	○	×	×	×	○
	ISP = 1	○	×	○	×	○
Software interrupt		○	×	○	×	○

Remarks 1. ○: Multiple interrupt servicing enabled

2. ×: Multiple interrupt servicing disabled

3. ISP and IE are flags contained in the PSW.

ISP = 0: An interrupt with higher priority is being serviced.

ISP = 1: No interrupt request has been acknowledged, or an interrupt with a lower priority is being serviced.

IE = 0: Interrupt request acknowledgment is disabled.

IE = 1: Interrupt request acknowledgment is enabled.

4. PR is a flag contained in PR0L, PR0H, PR1L, and PR1H.

PR = 0: Higher priority level

PR = 1: Lower priority level

Figure 20-22. Examples of Multiple Interrupt Servicing (1/2)

Example 1. Multiple interrupt servicing occurs twice

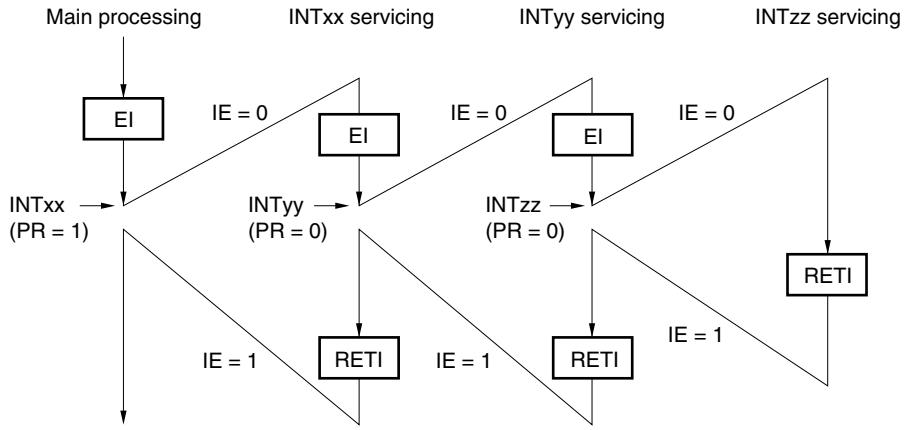

During servicing of interrupt INTxx, two interrupt requests, INTyy and INTzz, are acknowledged, and multiple interrupt servicing takes place. Before each interrupt request is acknowledged, the EI instruction must always be issued to enable interrupt request acknowledgment.

Example 2. Multiple interrupt servicing does not occur due to priority control

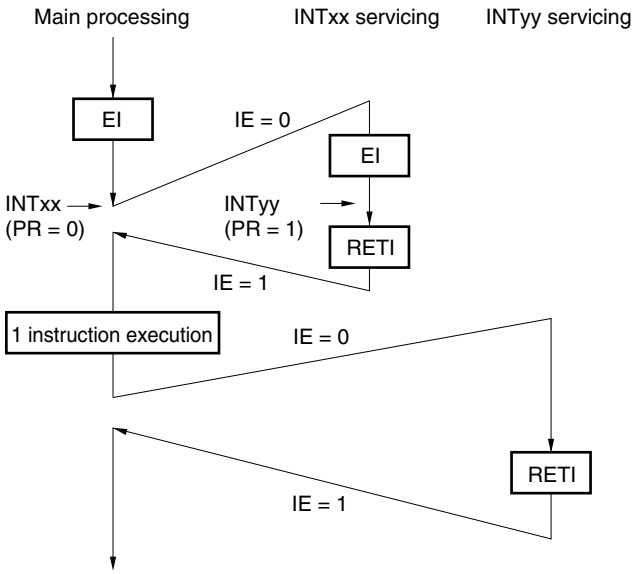

Interrupt request INTyy issued during servicing of interrupt INTxx is not acknowledged because its priority is lower than that of INTxx, and multiple interrupt servicing does not take place. The INTyy interrupt request is held pending, and is acknowledged following execution of one main processing instruction.

PR = 0: Higher priority level
PR = 1: Lower priority level
IE = 0: Interrupt request acknowledgment disabled

Figure 20-22. Examples of Multiple Interrupt Servicing (2/2)

Example 3. Multiple interrupt servicing does not occur because interrupts are not enabled

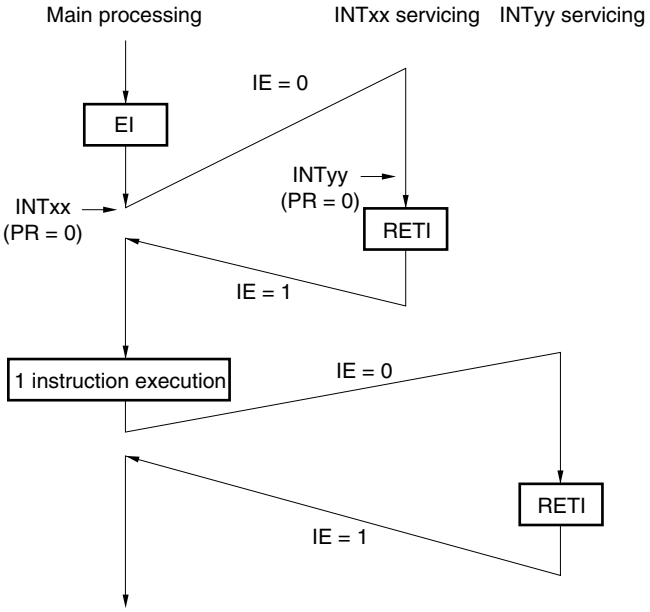

Interrupts are not enabled during servicing of interrupt INTxx (EI instruction is not issued), therefore, interrupt request INTyy is not acknowledged and multiple interrupt servicing does not take place. The INTyy interrupt request is held pending, and is acknowledged following execution of one main processing instruction.

PR = 0: Higher priority level
IE = 0: Interrupt request acknowledgment disabled

20.4.4 Interrupt request hold

There are instructions where, even if an interrupt request is issued for them while another instruction is being executed, request acknowledgment is held pending until the end of execution of the next instruction. These instructions (interrupt request hold instructions) are listed below.

- MOV PSW, #byte
- MOV A, PSW
- MOV PSW, A
- MOV1 PSW. bit, CY
- MOV1 CY, PSW. bit
- AND1 CY, PSW. bit
- OR1 CY, PSW. bit
- XOR1 CY, PSW. bit
- SET1 PSW. bit
- CLR1 PSW. bit
- RETB
- RETI
- PUSH PSW
- POP PSW
- BT PSW. bit, $addr16
- BF PSW. bit, $addr16
- BTCLR PSW. bit, $addr16
- EI
- DI
- Manipulation instructions for the IF0L, IF0H, IF1L, IF1H, MK0L, MK0H, MK1L, MK1H, PR0L, PR0H, PR1L, and PR1H registers.

Caution The BRK instruction is not one of the above-listed interrupt request hold instructions. However, the software interrupt activated by executing the BRK instruction causes the IE flag to be cleared. Therefore, even if a maskable interrupt request is generated during execution of the BRK instruction, the interrupt request is not acknowledged.

Figure 20-23 shows the timing at which interrupt requests are held pending.

Figure 20-23. Interrupt Request Hold

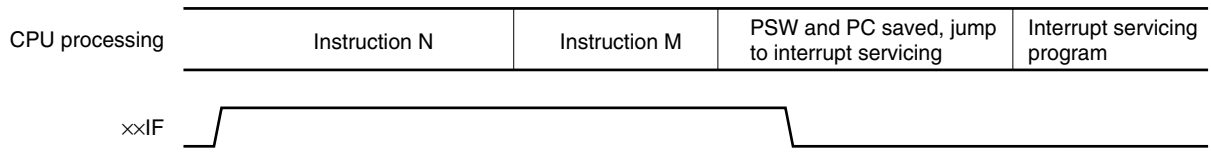

Remarks 1. Instruction N: Interrupt request hold instruction

2. Instruction M: Instruction other than interrupt request hold instruction

3. The ××PR (priority level) values do not affect the operation of ××IF (interrupt request).

CHAPTER 21 KEY INTERRUPT FUNCTION

	78K0/KB2	78K0/KC2	78K0/KD2	78K0/KE2	78K0/KF2
Key interrupt	–	38 pins: 2 ch 44/48 pins: 4 ch	8 ch		

21.1 Functions of Key Interrupt

A key interrupt (INTKR) can be generated by setting the key return mode register (KRM) and inputting a falling edge to the key interrupt input pins (KRn).

Table 21-1. Assignment of Key Interrupt Detection Pins

Flag	Description
KRMn	Controls KRn signal in 1-bit units.

Remark n = 0, 1: 38-pin products of 78K0/KC2
n = 0 to 3: 44-pin and 48-pin products of 78K0/KC2
n = 0 to 7: 78K0/KD2, 78K0/KE2, 78K0/KF2

21.2 Configuration of Key Interrupt

The key interrupt includes the following hardware.

Table 21-2. Configuration of Key Interrupt

Item	Configuration
Control register	Key return mode register (KRM)

Figure 21-1. Block Diagram of Key Interrupt

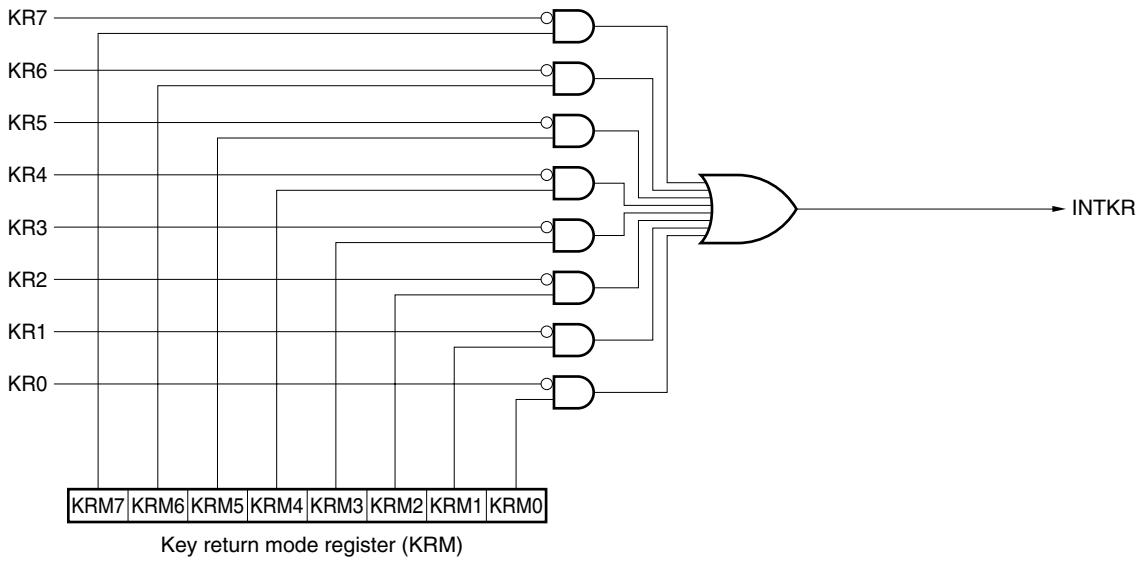

Remark KR0, KR1, KRM0, KRM1: 38-pin products of 78K0/KC2
KR0 to KR3, KRM0 to KRM3: 44-pin and 48-pin products of 78K0/KC2
KR0 to KR7, KRM0 to KRM7: 78K0/KD2, 78K0/KE2, 78K0/KF2

21.3 Register Controlling Key Interrupt

(1) Key return mode register (KRM)

This register controls the KRMn bit using the KRn signal.

KRM is set by a 1-bit or 8-bit memory manipulation instruction.

Reset signal generation clears KRM to 00H.

Figure 21-2. Format of Key Return Mode Register (KRM)

(1) 38-pin products of 78K0/KC2

Address: FF6EH After reset: 00H R/W

Symbol	7	6	5	4	3	2	1	0
KRM	0	0	0	0	0	0	KRM1	KRM0

(2) 44-pin and 48-pin products of 78K0/KC2

Address: FF6EH After reset: 00H R/W

Symbol	7	6	5	4	3	2	1	0
KRM	0	0	0	0	KRM3	KRM2	KRM1	KRM0

(3) 78K0/KD2, 78K0/KE2, 78K0/KF2

Address: FF6EH After reset: 00H R/W

Symbol	7	6	5	4	3	2	1	0
KRM	KRM7	KRM6	KRM5	KRM4	KRM3	KRM2	KRM1	KRM0

KRMn	Key interrupt mode control
0	Does not detect key interrupt signal
1	Detects key interrupt signal

Cautions 1. If any of the KRMn bits used is set to 1, set bit n (PU7n) of the corresponding pull-up resistor register 7 (PU7) to 1.

2. If KRM is changed, the interrupt request flag may be set. Therefore, disable interrupts and then change the KRM register. Clear the interrupt request flag and enable interrupts.

3. The bits not used in the key interrupt mode can be used as normal ports.

4. For the 38-pin products of 78K0/KC2, be sure to set bits 2 to 7 of KRM to "0". For the 44-pin and 48-pin products of 78K0/KC2, be sure to set bits 4 to 7 of KRM to "0".

Remark n = 0, 1: 38-pin products of 78K0/KC2

n = 0 to 3: 44-pin and 48-pin products of 78K0/KC2

n = 0 to 7: 78K0/KD2, 78K0/KE2, 78K0/KF2

CHAPTER 22 STANDBY FUNCTION

22.1 Standby Function and Configuration

22.1.1 Standby function

The standby function is mounted onto all 78K0/Kx2 microcontroller products.

The standby function is designed to reduce the operating current of the system. The following two modes are available.

(1) HALT mode

HALT instruction execution sets the HALT mode. In the HALT mode, the CPU operation clock is stopped. If the high-speed system clock oscillator, internal high-speed oscillator, internal low-speed oscillator, or subsystem clock oscillator is operating before the HALT mode is set, oscillation of each clock continues. In this mode, the operating current is not decreased as much as in the STOP mode, but the HALT mode is effective for restarting operation immediately upon interrupt request generation and carrying out intermittent operations frequently.

Note The 78K0/KB2 is not provided with a subsystem clock oscillator.

(2) STOP mode

STOP instruction execution sets the STOP mode. In the STOP mode, the high-speed system clock oscillator and internal high-speed oscillator stop, stopping the whole system, thereby considerably reducing the CPU operating current.

Because this mode can be cleared by an interrupt request, it enables intermittent operations to be carried out. However, because a wait time is required to secure the oscillation stabilization time after the STOP mode is released when the X1 clock is selected, select the HALT mode if it is necessary to start processing immediately upon interrupt request generation.

In either of these two modes, all the contents of registers, flags and data memory just before the standby mode is set are held. The I/O port output latches and output buffer statuses are also held.

Cautions 1. The STOP mode can be used only when the CPU is operating on the main system clock. The subsystem clock oscillation cannot be stopped. The HALT mode can be used when the CPU is operating on either the main system clock or the subsystem clock.

2. When shifting to the STOP mode, be sure to stop the peripheral hardware operation operating with main system clock before executing STOP instruction.

3. The following sequence is recommended for operating current reduction of the A/D converter when the standby function is used: First clear bit 7 (ADCS) and bit 0 (ADCE) of the A/D converter mode register (ADM) to 0 to stop the A/D conversion operation, and then execute the STOP instruction.

22.1.2 Registers controlling standby function

The standby function is controlled by the following two registers.

- Oscillation stabilization time counter status register (OSTC)
- Oscillation stabilization time select register (OSTS)

Remark For the registers that start, stop, or select the clock, see **CHAPTER 6 CLOCK GENERATOR**.

(1) Oscillation stabilization time counter status register (OSTC)

This is the register that indicates the count status of the X1 clock oscillation stabilization time counter. When X1 clock oscillation starts with the internal high-speed oscillation clock or subsystem clock used as the CPU clock, the X1 clock oscillation stabilization time can be checked.

OSTC can be read by a 1-bit or 8-bit memory manipulation instruction.

When reset is released (reset by $\overline{\text{RESET}}$ input, POC, LVI, and WDT), the STOP instruction and MSTOP (bit 7 of MOC register) = 1 clear OSTC to 00H.

Figure 22-1. Format of Oscillation Stabilization Time Counter Status Register (OSTC)

Address: FFA3H After reset: 00H R

Symbol	7	6	5	4	3	2	1	0
OSTC	0	0	0	MOST11	MOST13	MOST14	MOST15	MOST16

MOST11	MOST13	MOST14	MOST15	MOST16	Oscillation stabilization time status		
						f_X = 10 MHz	f_X = 20 MHz
1	0	0	0	0	$2^{11}/f_X$ min.	204.8 μs min.	102.4 μs min.
1	1	0	0	0	$2^{13}/f_X$ min.	819.2 μs min.	409.6 μs min.
1	1	1	0	0	$2^{14}/f_X$ min.	1.64 ms min.	819.2 μs min.
1	1	1	1	0	$2^{15}/f_X$ min.	3.27 ms min.	1.64 ms min.
1	1	1	1	1	$2^{16}/f_X$ min.	6.55 ms min.	3.27 ms min.

Cautions 1. After the above time has elapsed, the bits are set to 1 in order from MOST11 and remain 1.

2. The oscillation stabilization time counter counts up to the oscillation stabilization time set by OSTS. If the STOP mode is entered and then released while the internal high-speed oscillation clock is being used as the CPU clock, set the oscillation stabilization time as follows.

- **Desired OSTC oscillation stabilization time ≤ Oscillation stabilization time set by OSTS**

Note, therefore, that only the status up to the oscillation stabilization time set by OSTS is set to OSTC after STOP mode is released.

3. The X1 clock oscillation stabilization wait time does not include the time until clock oscillation starts ("a" below).

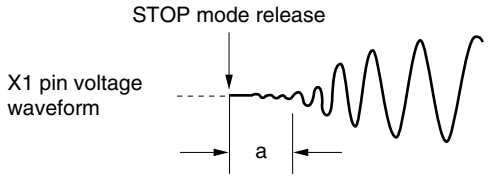

Remark fx: X1 clock oscillation frequency

(2) Oscillation stabilization time select register (OSTS)

This register is used to select the X1 clock oscillation stabilization wait time when the STOP mode is released.

When the X1 clock is selected as the CPU clock, the operation waits for the time set using OSTS after the STOP mode is released.

When the internal high-speed oscillation clock is selected as the CPU clock, confirm with OSTC that the desired oscillation stabilization time has elapsed after the STOP mode is released. The oscillation stabilization time can be checked up to the time set using OSTC.

OSTS can be set by an 8-bit memory manipulation instruction.

Reset signal generation sets OSTS to 05H.

Figure 22-2. Format of Oscillation Stabilization Time Select Register (OSTS)

Address: FFA4H After reset: 05H R/W

Symbol	7	6	5	4	3	2	1	0
OSTS	0	0	0	0	0	OSTS2	OSTS1	OSTS0

OSTS2	OSTS1	OSTS0	Oscillation stabilization time selection		
				fx = 10 MHz	fx = 20 MHz
0	0	1	2^{11}/fx	204.8 μs	102.4 μs
0	1	0	2^{13}/fx	819.2 μs	409.6 μs
0	1	1	2^{14}/fx	1.64 ms	819.2 μs
1	0	0	2^{15}/fx	3.27 ms	1.64 ms
1	0	1	2^{16}/fx	6.55 ms	3.27 ms
Other than above			Setting prohibited		

Cautions 1. To set the STOP mode when the X1 clock is used as the CPU clock, set OSTS before executing the STOP instruction.

2. Do not change the value of the OSTS register during the X1 clock oscillation stabilization time.

3. The oscillation stabilization time counter counts up to the oscillation stabilization time set by OSTS. If the STOP mode is entered and then released while the internal high-speed oscillation clock is being used as the CPU clock, set the oscillation stabilization time as follows.

- **Desired OSTC oscillation stabilization time ≤ Oscillation stabilization time set by OSTS**

Note, therefore, that only the status up to the oscillation stabilization time set by OSTS is set to OSTC after STOP mode is released.

4. The X1 clock oscillation stabilization wait time does not include the time until clock oscillation starts ("a" below).

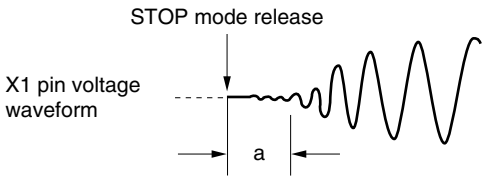

Remark fx: X1 clock oscillation frequency

22.2 Standby Function Operation

22.2.1 HALT mode

(1) HALT mode

The HALT mode is set by executing the HALT instruction. HALT mode can be set regardless of whether the CPU clock before the setting was the high-speed system clock, internal high-speed oscillation clock, or subsystem clock[Note]. The operating statuses in the HALT mode are shown below.

Note The 78K0/KB2 is not provided with a subsystem clock.

Table 22-1. Operating Statuses in HALT Mode (1/2)

HALT Mode Setting / Item			When HALT Instruction Is Executed While CPU Is Operating on Main System Clock		
			When CPU Is Operating on Internal High-Speed Oscillation Clock (f_{RH})	When CPU Is Operating on X1 Clock (f_X)	When CPU Is Operating on External Main System Clock (f_{EXCLK})
System clock			Clock supply to the CPU is stopped		
	Main system clock	f_{RH}	Operation continues (cannot be stopped)	Status before HALT mode was set is retained	
		f_X	Status before HALT mode was set is retained	Operation continues (cannot be stopped)	Status before HALT mode was set is retained
		f_{EXCLK}	Operates or stops by external clock input		Operation continues (cannot be stopped)
	Subsystem clock	f_{XT}	Status before HALT mode was set is retained		
		f_{EXCLKS}	Operates or stops by external clock input		
	f_{RL}		Status before HALT mode was set is retained		
CPU			Operation stopped		
Flash memory					
RAM			Status before HALT mode was set is retained		
Port (latch)					
16-bit timer/event counter		00	Operable		
		01			
8-bit timer/event counter		50			
		51			
8-bit timer		H0			
		H1			
Watch timer					
Watchdog timer			Operable. Clock supply to watchdog timer stops when “internal low-speed oscillator can be stopped by software” is set by option byte.		
Clock output			Operable		
Buzzer output					
A/D converter					
Serial interface		UART0			
		UART6			
		CSI10			
		CSI11			
		CSIA0			
		IIC0			
Multiplier/divider					
Power-on-clear function					
Low-voltage detection function					
External interrupt					

Remarks 1. f_{RH}: Internal high-speed oscillation clock, f_X: X1 clock
f_{EXCLK}: External main system clock, f_{XT}: XT1 clock
f_{EXCLKS}: External subsystem clock, f_{RL}: Internal low-speed oscillation clock

2. The functions mounted depend on the product. See **1.7 Block Diagram** and **1.8 Outline of Functions**.

Table 22-1. Operating Statuses in HALT Mode (2/2)

HALT Mode Setting / Item			When HALT Instruction Is Executed While CPU Is Operating on Subsystem Clock	
			When CPU Is Operating on XT1 Clock (f_{XT})	When CPU Is Operating on External Subsystem Clock (f_{EXCLKS})
System clock			Clock supply to the CPU is stopped	
	Main system clock	f_{RH}	Status before HALT mode was set is retained	
		f_X		
		f_{EXCLK}	Operates or stops by external clock input	
	Subsystem clock	f_{XT}	Operation continues (cannot be stopped)	Status before HALT mode was set is retained
		f_{EXCLKS}	Operates or stops by external clock input	Operation continues (cannot be stopped)
	f_{RL}		Status before HALT mode was set is retained	
CPU			Operation stopped	
Flash memory				
RAM			Status before HALT mode was set is retained	
Port (latch)				
16-bit timer/event counter		00Note	Operable	
		01Note		
8-bit timer/event counter		50Note		
		51Note		
8-bit timer		H0		
		H1		
Watch timer				
Watchdog timer			Operable. Clock supply to watchdog timer stops when “internal low-speed oscillator can be stopped by software” is set by option byte.	
Clock output			Operable	
Buzzer output			Operable. However, operation disabled when peripheral hardware clock (f_{PRS}) is stopped.	
A/D converter				
Serial interface	UART0		Operable	
	UART6			
	CSI10Note			
	CSI11Note			
	CSIA0Note			
	IIC0Note			
Multiplier/divider				
Power-on-clear function				
Low-voltage detection function				
External interrupt				

Note When the CPU is operating on the subsystem clock and the internal high-speed oscillation clock and high-speed system clock have been stopped, do not start operation of these functions on the external clock input from peripheral hardware pins.

Remarks 1. f_{RH}: Internal high-speed oscillation clock, f_X: X1 clock
f_{EXCLK}: External main system clock, f_{XT}: XT1 clock
f_{EXCLKS}: External subsystem clock, f_{RL}: Internal low-speed oscillation clock

2. The functions mounted depend on the product. See **1.7 Block Diagram** and **1.8 Outline of Functions**.

(2) HALT mode release

The HALT mode can be released by the following two sources.

(a) Release by unmasked interrupt request

When an unmasked interrupt request is generated, the HALT mode is released. If interrupt acknowledgment is enabled, vectored interrupt servicing is carried out. If interrupt acknowledgment is disabled, the next address instruction is executed.

Figure 22-3. HALT Mode Release by Interrupt Request Generation

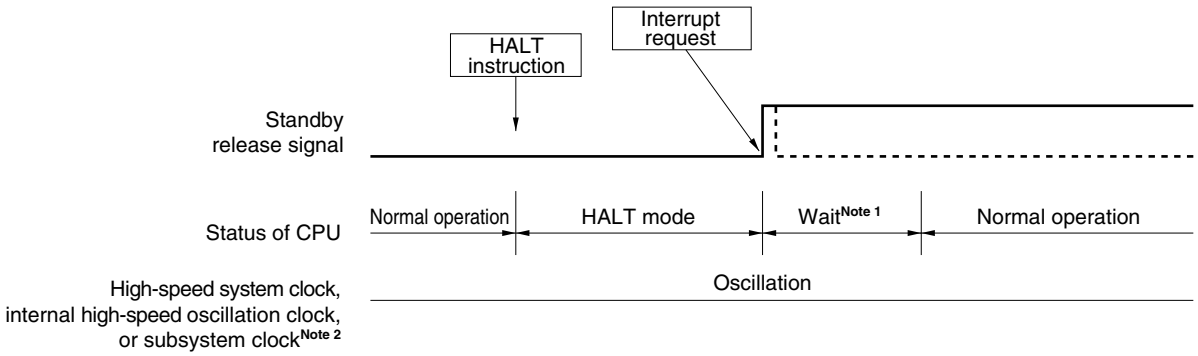

Notes 1. The wait time is as follows:

- When vectored interrupt servicing is carried out: 11 or 12 clocks
- When vectored interrupt servicing is not carried out: 4 or 5 clocks

2. The 78K0/KB2 is not provided with a subsystem clock.

Remark The broken lines indicate the case when the interrupt request which has released the standby mode is acknowledged.

(b) Release by reset signal generation

When the reset signal is generated, HALT mode is released, and then, as in the case with a normal reset operation, the program is executed after branching to the reset vector address.

Figure 22-4. HALT Mode Release by Reset

(1) When high-speed system clock is used as CPU clock

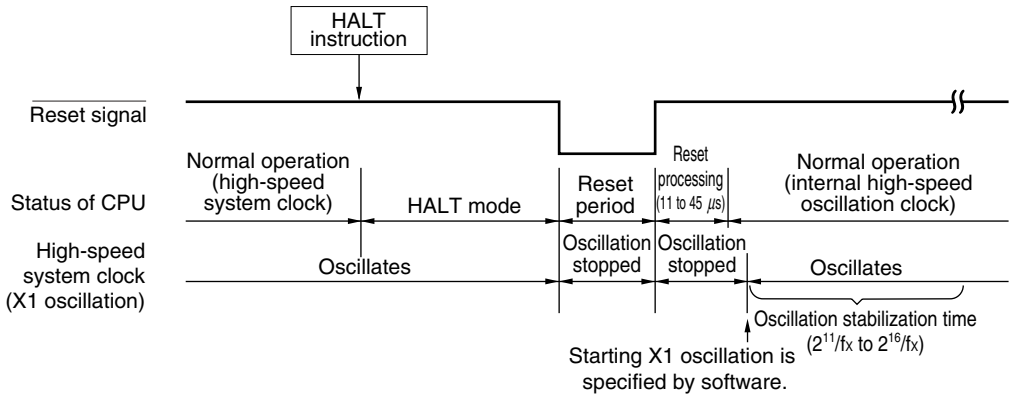

(2) When internal high-speed oscillation clock is used as CPU clock

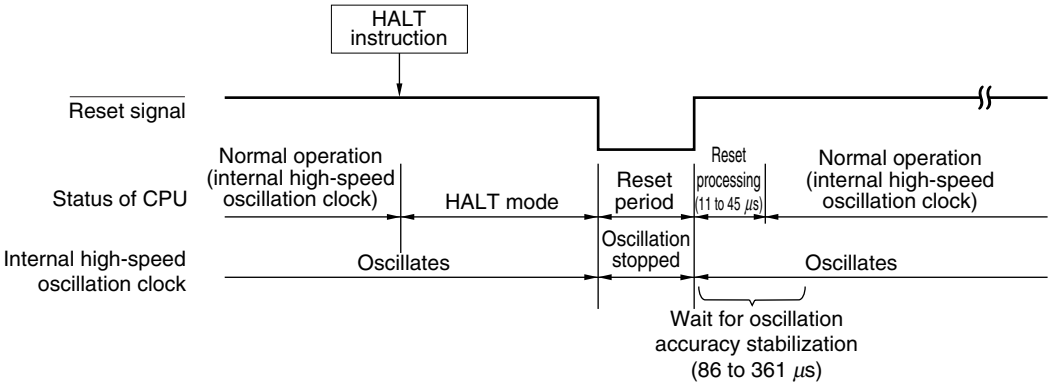

(3) When subsystem clock is used as CPU clock[Note 1]

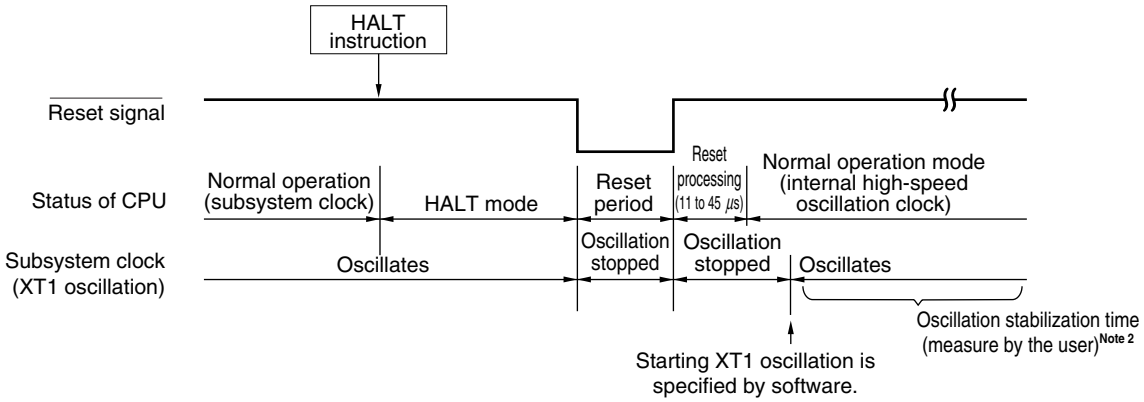

Notes 1. The 78K0/KB2 is not provided with a subsystem clock.

<R> **2.** Oscillation stabilization time is not required when using the external subsystem clock (f_{EXCLKS}) as the subsystem clock.

Remark fx: X1 clock oscillation frequency

Table 22-2. Operation in Response to Interrupt Request in HALT Mode

Release Source	MK××	PR××	IE	ISP	Operation
Maskable interrupt request	0	0	0	×	Next address instruction execution
	0	0	1	×	Interrupt servicing execution
	0	1	0	1	Next address instruction execution
	0	1	×	0	
	0	1	1	1	Interrupt servicing execution
	1	×	×	×	HALT mode held
Reset	–	–	×	×	Reset processing

×: don't care

22.2.2 STOP mode

(1) STOP mode setting and operating statuses

The STOP mode is set by executing the STOP instruction, and it can be set only when the CPU clock before the setting was the main system clock.

Caution Because the interrupt request signal is used to clear the standby mode, if there is an interrupt source with the interrupt request flag set and the interrupt mask flag reset, the standby mode is immediately cleared if set. Thus, the STOP mode is reset to the HALT mode immediately after execution of the STOP instruction and the system returns to the operating mode as soon as the wait time set using the oscillation stabilization time select register (OSTS) has elapsed.

The operating statuses in the STOP mode are shown below.

Table 22-3. Operating Statuses in STOP Mode

Item \ STOP Mode Setting			When STOP Instruction Is Executed While CPU Is Operating on Main System Clock		
			When CPU Is Operating on Internal High-Speed Oscillation Clock (f_{RH})	When CPU Is Operating on X1 Clock (f_X)	When CPU Is Operating on External Main System Clock (f_{EXCLK})
System clock			Clock supply to the CPU is stopped		
	Main system clock	f_{RH}	Stopped		
		f_X			
		f_{EXCLK}	Input invalid		
	Subsystem clock	f_{XT}	Status before STOP mode was set is retained		
		f_{EXCLKS}	Operates or stops by external clock input		
	f_{RL}		Status before STOP mode was set is retained		
CPU			Operation stopped		
Flash memory					
RAM			Status before STOP mode was set is retained		
Port (latch)					
16-bit timer/event counter		00[Note 1]	Operation stopped		
		01[Note 1]			
8-bit timer/event counter		50[Note 1]	Operable only when TI50 is selected as the count clock		
		51[Note 1]	Operable only when TI51 is selected as the count clock		
8-bit timer		H0	Operable only when TM50 output is selected as the count clock during 8-bit timer/event counter 50 operation		
		H1	Operable only when f_{RL}, $f_{RL}/2^7$, $f_{RL}/2^9$ is selected as the count clock		
Watch timer			Operable only when subsystem clock is selected as the count clock		
Watchdog timer			Operable. Clock supply to watchdog timer stops when “internal low-speed oscillator can be stopped by software” is set by option byte.		
Clock output			Operable only when subsystem clock is selected as the count clock		
Buzzer output			Operation stopped		
A/D converter					
Serial interface	UART0		Operable only when TM50 output is selected as the serial clock during 8-bit timer/event counter 50 operation		
	UART6				
	CSI10[Note 1]		Operable only when external clock is selected as the serial clock		
	CSI11[Note 1]				
	CSIA0[Note 1]		Operation stopped		
	IIC0[Note 1]		Operable only when the external clock from EXSCL0/P62 pin is selected as the serial clock[Note 2]		
Multiplier/divider			Operation stopped		
Power-on-clear function			Operable		
Low-voltage detection function					
External interrupt					

Notes 1. Do not start operation of these functions on the external clock input from peripheral hardware pins in the stop mode.

2. The operation of 78K0/KB2 products is stopped (The external clock from the EXSCL0/P62 pin cannot be selected, because the EXSCL0/P62 pin is not mounted.).

Remarks 1. f_{RH}: Internal high-speed oscillation clock, f_X: X1 clock
f_{EXCLK}: External main system clock, f_{XT}: XT1 clock
f_{EXCLKS}: External subsystem clock, f_{RL}: Internal low-speed oscillation clock

2. The functions mounted depend on the product. See **1.7 Block Diagram** and **1.8 Outline of Functions**.

Cautions 1. To use the peripheral hardware that stops operation in the STOP mode, and the peripheral hardware for which the clock that stops oscillating in the STOP mode after the STOP mode is released, restart the peripheral hardware.

2. Even if "internal low-speed oscillator can be stopped by software" is selected by the option byte, the internal low-speed oscillation clock continues in the STOP mode in the status before the STOP mode is set. To stop the internal low-speed oscillator's oscillation in the STOP mode, stop it by software and then execute the STOP instruction.

3. To shorten oscillation stabilization time after the STOP mode is released when the CPU operates with the high-speed system clock (X1 oscillation), switch the CPU clock to the internal high-speed oscillation clock before the execution of the STOP instruction using the following procedure.

<1> Set RSTOP to 0 (starting oscillation of the internal high-speed oscillator) → <2> Set MCM0 to 0 (switching the CPU from X1 oscillation to internal high-speed oscillation) → <3> Check that MCS is 0 (checking the CPU clock) → <4> Check that RSTS is 1 (checking internal high-speed oscillation operation) → <5> Execute the STOP instruction

Before changing the CPU clock from the internal high-speed oscillation clock to the high-speed system clock (X1 oscillation) after the STOP mode is released, check the oscillation stabilization time with the oscillation stabilization time counter status register (OSTC).

4. If the STOP instruction is executed when AMPH = 1, supply of the CPU clock is stopped for 4.06 to 16.12 μs after the STOP mode is released when the internal high-speed oscillation clock is selected as the CPU clock, or for the duration of 160 external clocks when the high-speed system clock (external clock input) is selected as the CPU clock.

5. Execute the STOP instruction after having confirmed that the internal high-speed oscillator is operating stably (RSTS = 1).

(2) STOP mode release

Figure 22-5. Operation Timing When STOP Mode Is Released (When Unmasked Interrupt Request Is Generated)

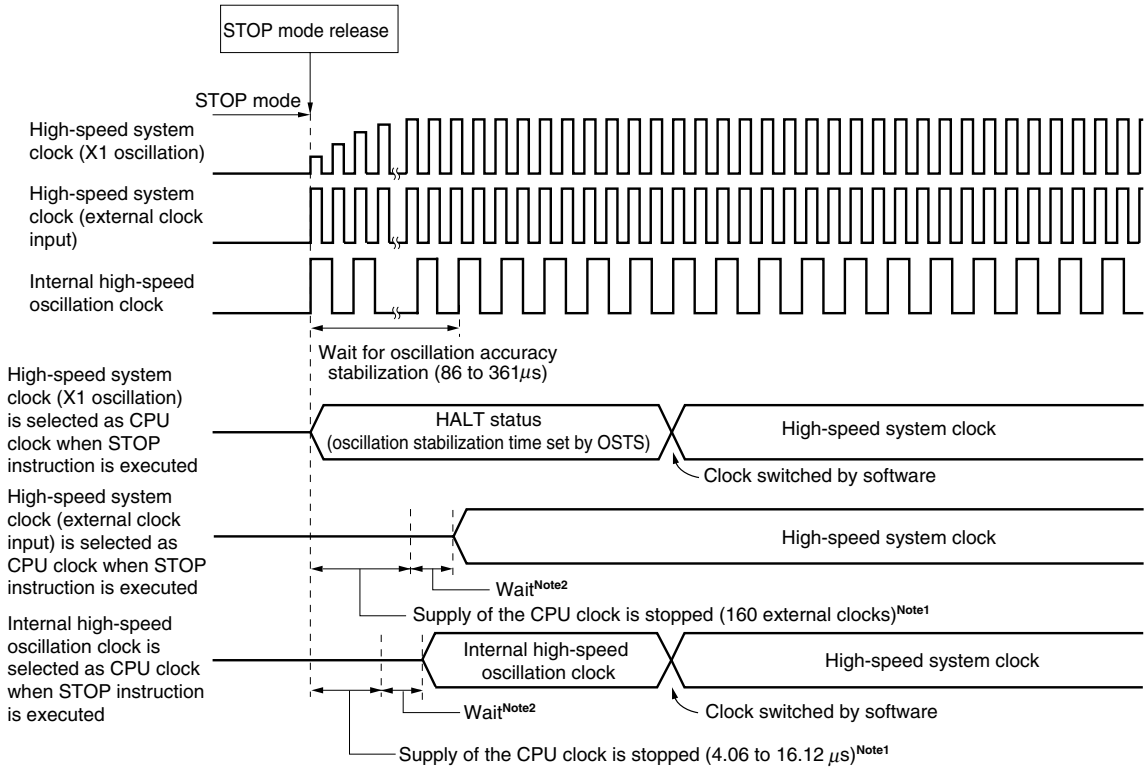

Notes 1. When AMPH = 1

2. The wait time is as follows:

- When vectored interrupt servicing is carried out: 17 or 18 clocks
- When vectored interrupt servicing is not carried out: 11 or 12 clocks

The STOP mode can be released by the following two sources.

(a) Release by unmasked interrupt request

When an unmasked interrupt request is generated, the STOP mode is released. After the oscillation stabilization time has elapsed, if interrupt acknowledgment is enabled, vectored interrupt servicing is carried out. If interrupt acknowledgment is disabled, the next address instruction is executed.

Figure 22-6. STOP Mode Release by Interrupt Request Generation (1/2)

(1) When high-speed system clock (X1 oscillation) is used as CPU clock

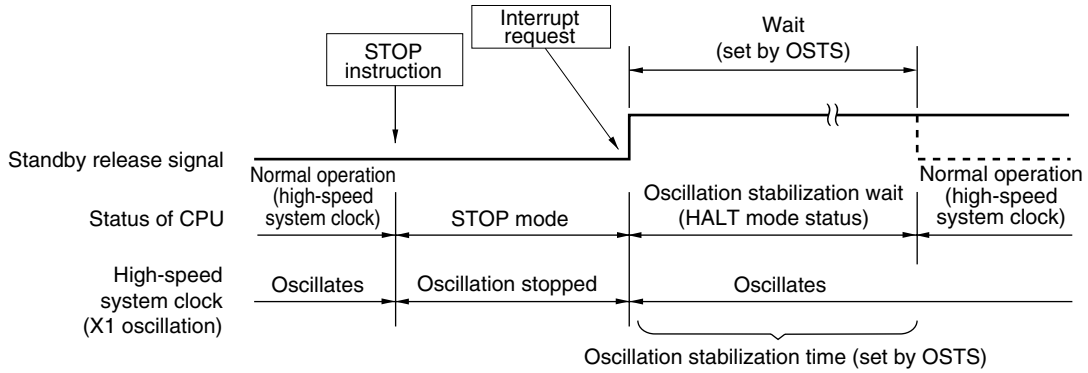

(2) When high-speed system clock (external clock input) is used as CPU clock

- When AMPH = 1

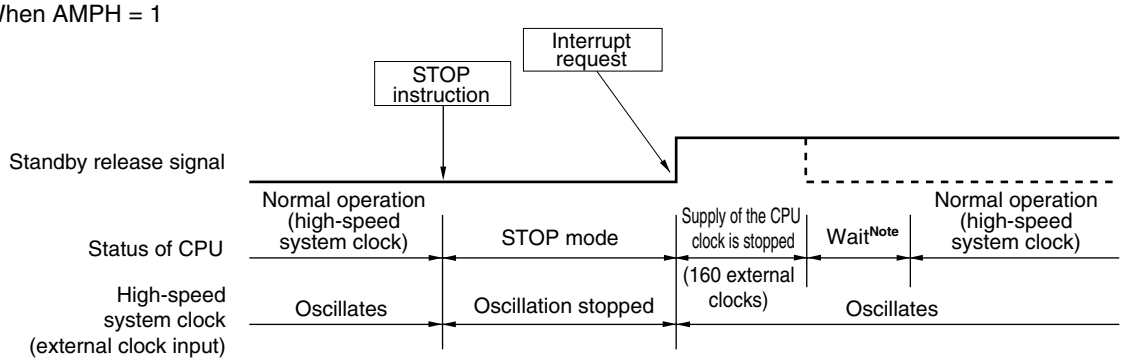

- When AMPH = 0

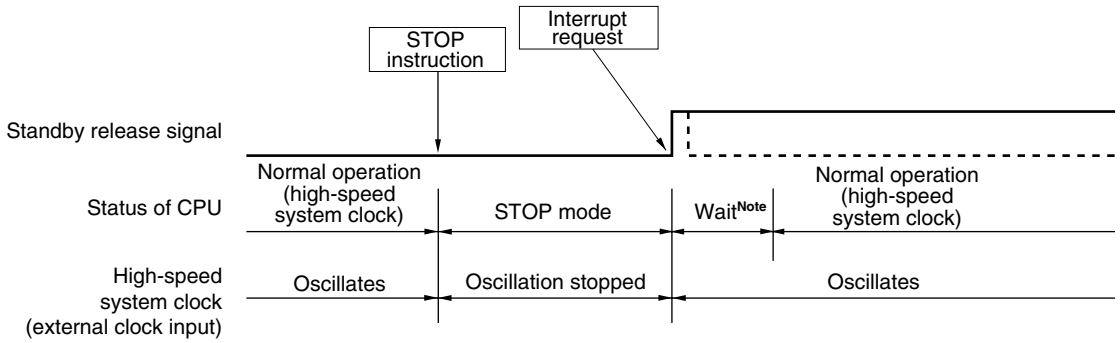

Note The wait time is as follows:

- When vectored interrupt servicing is carried out: 17 or 18 clocks
- When vectored interrupt servicing is not carried out: 11 or 12 clocks

Remark The broken lines indicate the case when the interrupt request that has released the standby mode is acknowledged.

Figure 22-6. STOP Mode Release by Interrupt Request Generation (2/2)

(3) When internal high-speed oscillation clock is used as CPU clock

- When AMPH = 1

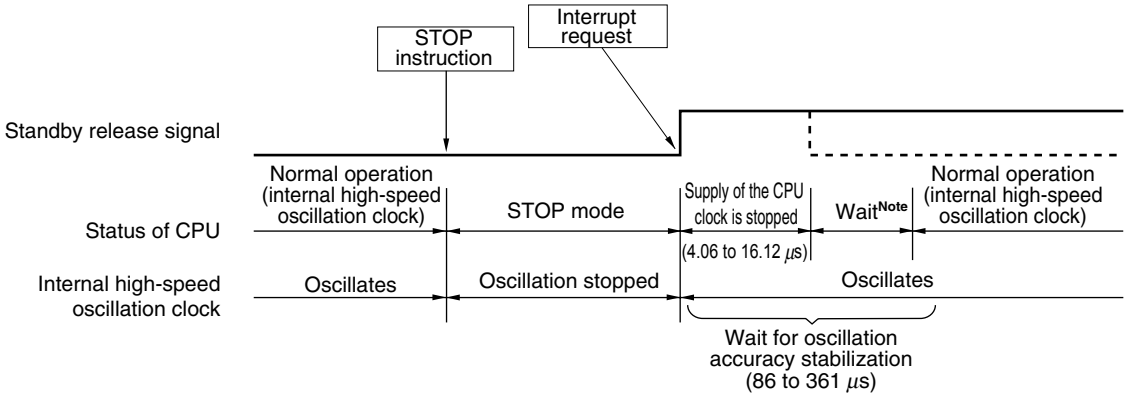

- When AMPH = 0

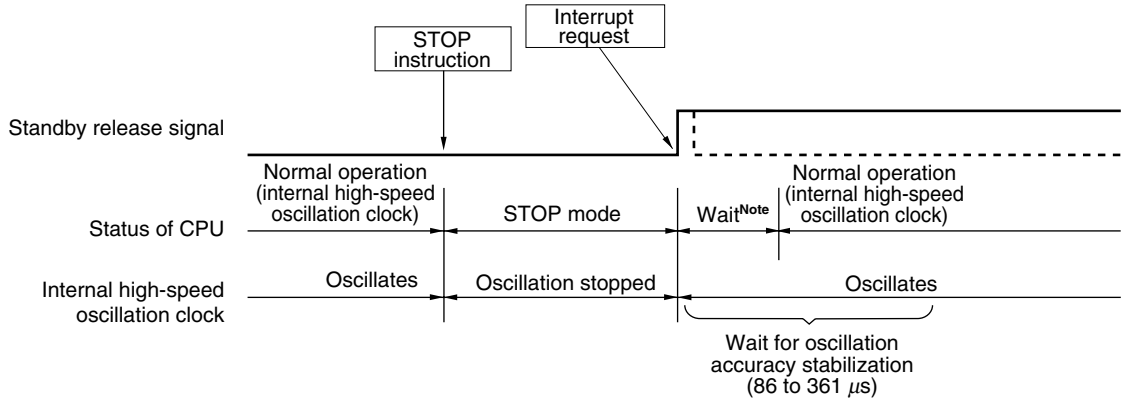

Note The wait time is as follows:

- When vectored interrupt servicing is carried out: 17 or 18 clocks
- When vectored interrupt servicing is not carried out: 11 or 12 clocks

Remark The broken lines indicate the case when the interrupt request that has released the standby mode is acknowledged.

(b) Release by reset signal generation

When the reset signal is generated, STOP mode is released, and then, as in the case with a normal reset operation, the program is executed after branching to the reset vector address.

Figure 22-7. STOP Mode Release by Reset

(1) When high-speed system clock is used as CPU clock

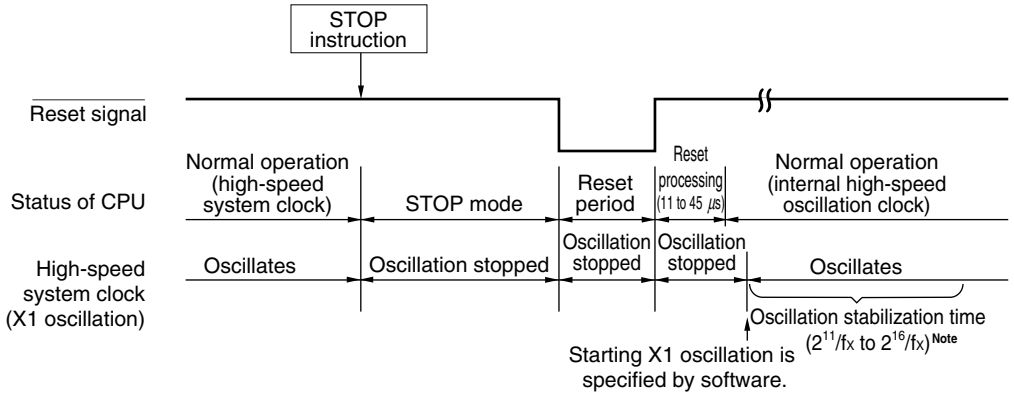

<R> **Note** Oscillation stabilization time is not required when using the external main system clock (f_{EXCLK}) as the high-speed system clock.

(2) When internal high-speed oscillation clock is used as CPU clock

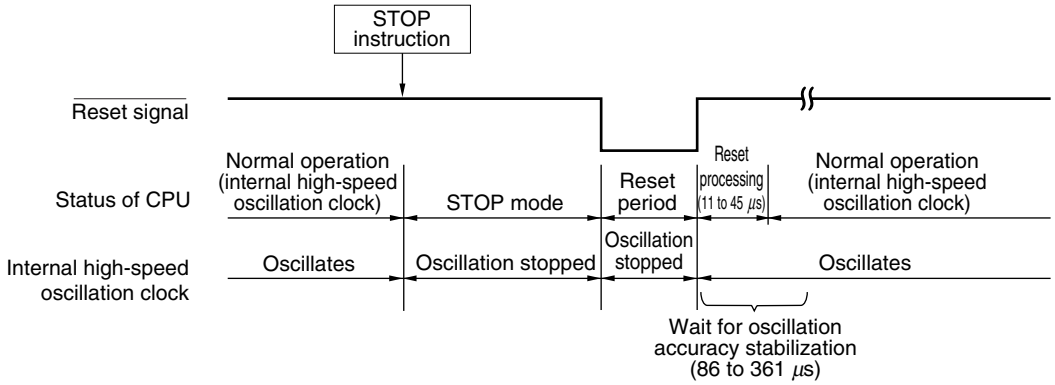

Remark fx: X1 clock oscillation frequency

Table 22-4. Operation in Response to Interrupt Request in STOP Mode

Release Source	MK××	PR××	IE	ISP	Operation
Maskable interrupt request	0	0	0	×	Next address instruction execution
	0	0	1	×	Interrupt servicing execution
	0	1	0	1	Next address instruction execution
	0	1	×	0	
	0	1	1	1	Interrupt servicing execution
	1	×	×	×	STOP mode held
Reset	–	–	×	×	Reset processing

×: don't care

CHAPTER 23 RESET FUNCTION

The reset function is mounted onto all 78K0/Kx2 microcontroller products.

The following four operations are available to generate a reset signal.

(1) External reset input via $\overline{\text{RESET}}$ pin
(2) Internal reset by watchdog timer program loop detection
(3) Internal reset by comparison of supply voltage and detection voltage of power-on-clear (POC) circuit
(4) Internal reset by comparison of supply voltage and detection voltage of low-power-supply detector (LVI)

External and internal resets have no functional differences. In both cases, program execution starts at the address at 0000H and 0001H when the reset signal is generated.

A reset is applied when a low level is input to the $\overline{\text{RESET}}$ pin, the watchdog timer overflows, or by POC and LVI circuit voltage detection, and each item of hardware is set to the status shown in Tables 23-1 and 23-2. Each pin is high impedance during reset signal generation or during the oscillation stabilization time just after a reset release, except for P130, which is low-level output.

When a low level is input to the $\overline{\text{RESET}}$ pin, the device is reset. It is released from the reset status when a high level is input to the $\overline{\text{RESET}}$ pin and program execution is started with the internal high-speed oscillation clock after reset processing. A reset by the watchdog timer is automatically released, and program execution starts using the internal high-speed oscillation clock (see **Figures 23-2** to **23-4**) after reset processing. Reset by POC and LVI circuit power supply detection is automatically released when $V_{DD} \geq V_{POC}$ or $V_{DD} \geq V_{LVI}$ after the reset, and program execution starts using the internal high-speed oscillation clock (see **CHAPTER 24 POWER-ON-CLEAR CIRCUIT** and **CHAPTER 25 LOW-VOLTAGE DETECTOR**) after reset processing.

Cautions 1. For an external reset, input a low level for 10 μs or more to the $\overline{\text{RESET}}$ pin.

2. During reset signal generation, the X1 clock, XT1 clock[Note 1], internal high-speed oscillation clock, and internal low-speed oscillation clock stop oscillating. External main system clock input and external subsystem clock[Note 1] input become invalid.

3. When the STOP mode is released by a reset, the STOP mode contents are held during reset input. However, the port pins become high-impedance, except for P130[Note 2], which is set to low-level output.

Notes 1. The 78K0/KB2 is not provided with XT1 clock and external subsystem clock.

2. P130 pin is not mounted onto 38-pin and 44-pin products of the 78K0/KC2 and 78K0/KB2.

Figure 23-1. Block Diagram of Reset Function

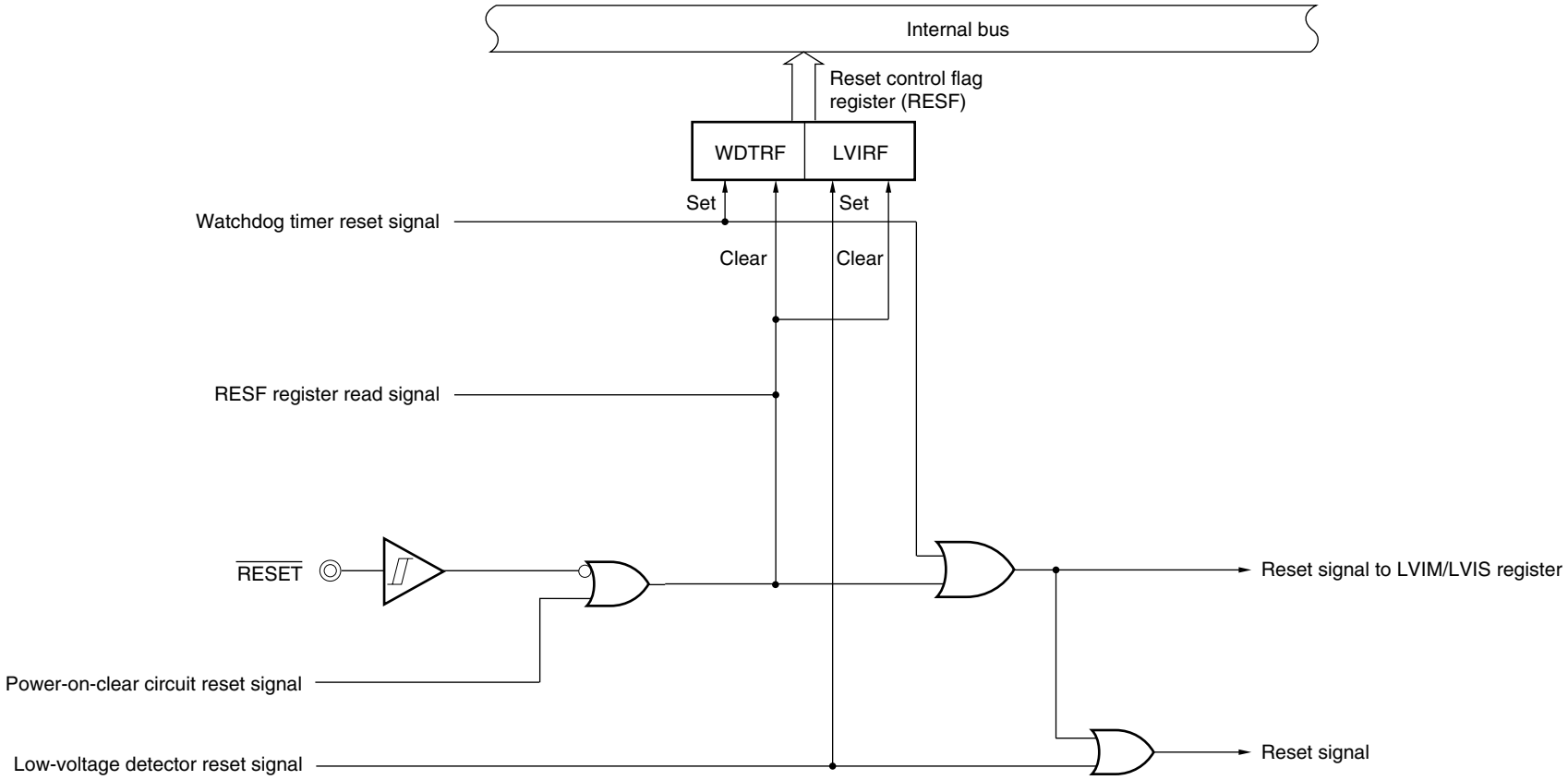

Caution An LVI circuit internal reset does not reset the LVI circuit.

Remarks 1. LVIM: Low-voltage detection register

2. LVIS: Low-voltage detection level selection register

Figure 23-2. Timing of Reset by $\overline{\text{RESET}}$ Input

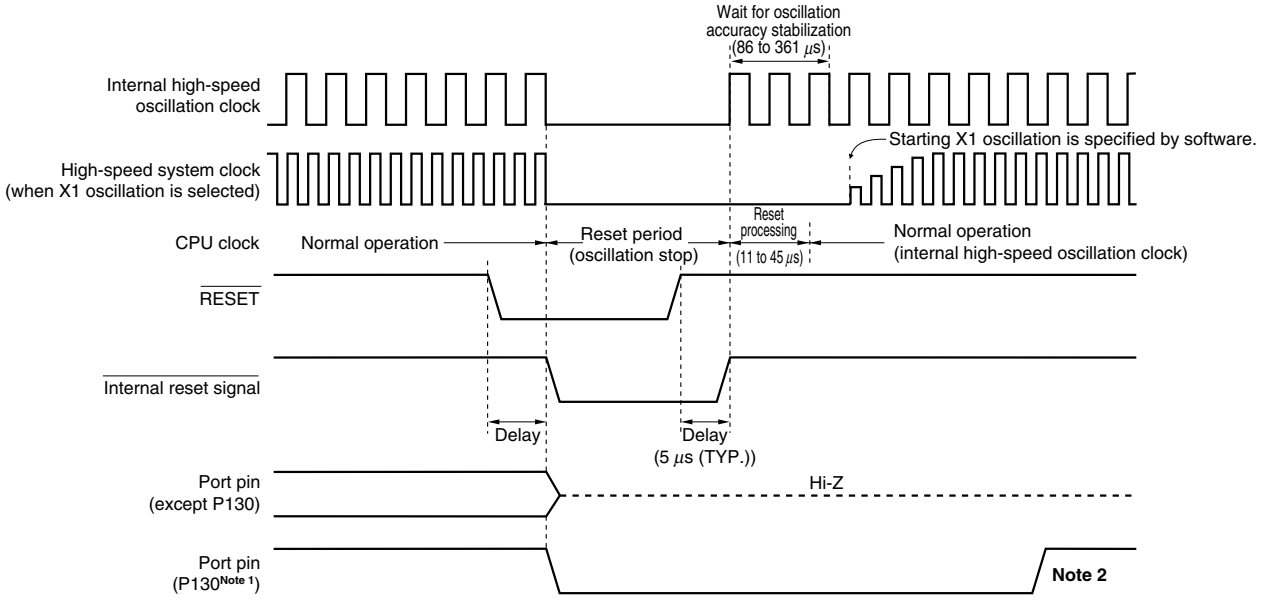

Notes 1. P130 pin is not mounted onto 78K0/KB2, and 38-pin and 44-pin products of the 78K0/KC2.

2. Set P130 to high-level output by software.

Remark When reset is effected, P130 outputs a low level. If P130 is set to output a high level before reset is effected, the output signal of P130 can be dummy-output as the CPU reset signal.

Figure 23-3. Timing of Reset Due to Watchdog Timer Overflow

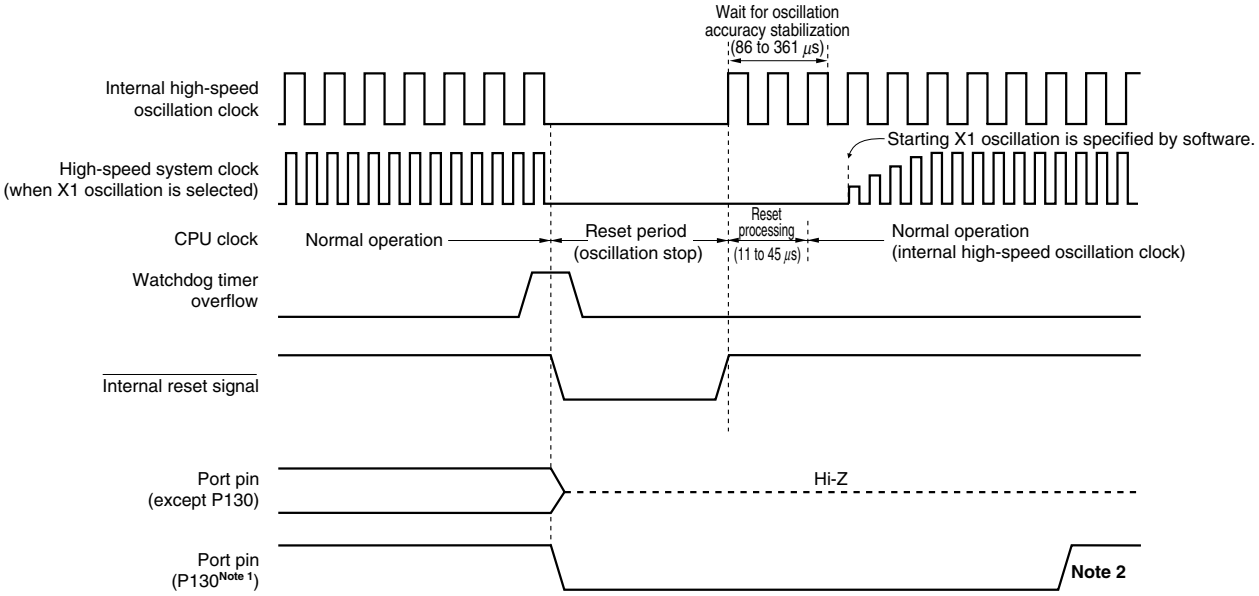

Notes 1. P130 pin is not mounted onto 78K0/KB2, and 38-pin and 44-pin products of the 78K0/KC2.

2. Set P130 to high-level output by software.

Caution A watchdog timer internal reset resets the watchdog timer.

Remark When reset is effected, P130 outputs a low level. If P130 is set to output a high level before reset is effected, the output signal of P130 can be dummy-output as the CPU reset signal.

Figure 23-4. Timing of Reset in STOP Mode by $\overline{\text{RESET}}$ Input

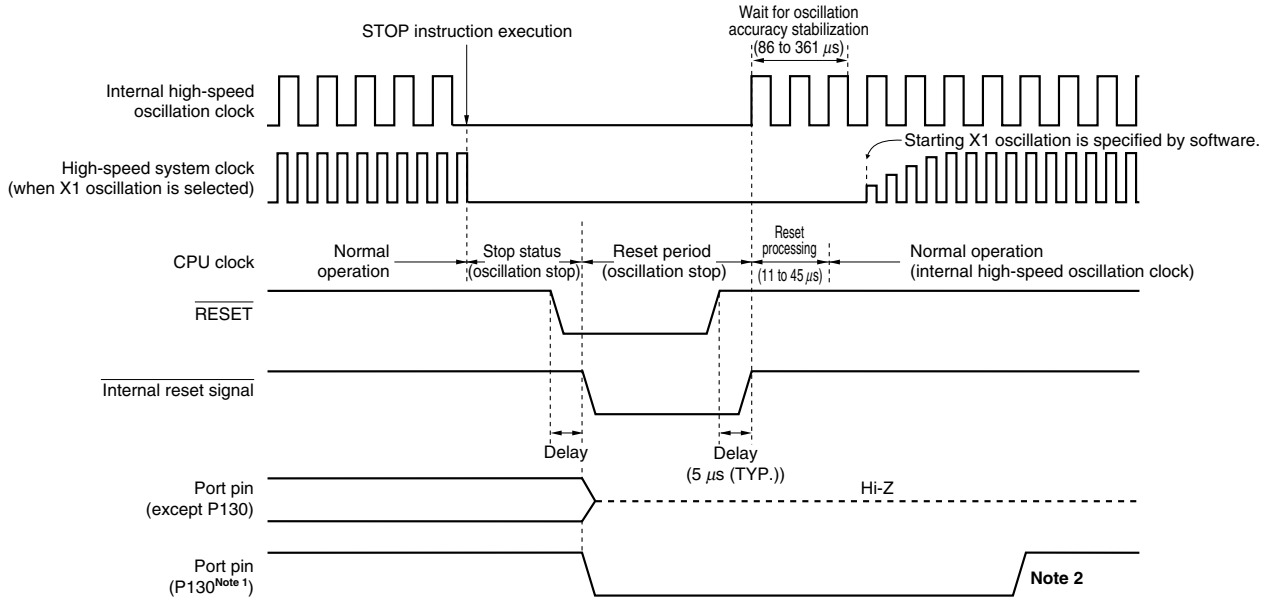

Notes 1. P130 pin is not mounted onto 78K0/KB2, and 38-pin and 44-pin products of the 78K0/KC2.

2. Set P130 to high-level output by software.

Remarks 1. When reset is effected, P130 outputs a low level. If P130 is set to output a high level before reset is effected, the output signal of P130 can be dummy-output as the CPU reset signal.

2. For the reset timing of the power-on-clear circuit and low-voltage detector, see **CHAPTER 24 POWER-ON-CLEAR CIRCUIT** and **CHAPTER 25 LOW-VOLTAGE DETECTOR**.

Table 23-1. Operation Statuses During Reset Period

Item			During Reset Period
System clock			Clock supply to the CPU is stopped.
	Main system clock	f_{RH}	Operation stopped
		f_X	Operation stopped (pin is I/O port mode)
		f_{EXCLK}	Clock input invalid (pin is I/O port mode)
	Subsystem clock	f_{XT}	Operation stopped (pin is I/O port mode)
		f_{EXCLKS}	Clock input invalid (pin is I/O port mode)
	f_{RL}		Operation stopped
CPU			
Flash memory			
RAM			
Port (latch)			
16-bit timer/event counter		00	
		01	
8-bit timer/event counter		50	
		51	
8-bit timer		H0	
		H1	
Watch timer			
Watchdog timer			
Clock output			
Buzzer output			
A/D converter			
Serial interface		UART0	
		UART6	
		CSI10	
		CSI11	
		CSIA0	
		IIC0	
Multiplier/divider			
Power-on-clear function			Operable
Low-voltage detection function			Operation stopped
External interrupt			

Remarks 1. f_{RH}: Internal high-speed oscillation clock, f_X: X1 clock
f_{EXCLK}: External main system clock, f_{XT}: XT1 clock
f_{EXCLKS}: External subsystem clock, f_{RL}: Internal low-speed oscillation clock

2. The functions mounted depend on the product. See **1.7 Block Diagram** and **1.8 Outline of Functions**.

Table 23-2. Hardware Statuses After Reset Acknowledgment (1/4)

Hardware		After Reset Acknowledgment[Note 1]
Program counter (PC)		The contents of the reset vector table (0000H, 0001H) are set.
Stack pointer (SP)		Undefined
Program status word (PSW)		02H
RAM	Data memory	Undefined[Note 2]
	General-purpose registers	Undefined[Note 2]
Port registers (P0 to P7, P12 to P14) (output latches)		00H
Port mode registers (PM0 to PM7, PM12, PM14)		FFH
Pull-up resistor option registers (PU0, PU1, PU3 to PU7, PU12, PU14)		00H
Internal expansion RAM size switching register (IXS)		0CH[Notes 3, 4]
Internal memory size switching register (IMS)		CFH[Notes 3, 4]

Notes 1. During reset signal generation or oscillation stabilization time wait, only the PC contents among the hardware statuses become undefined. All other hardware statuses remain unchanged after reset.

2. When a reset is executed in the standby mode, the pre-reset status is held even after reset.

3. The initial values of the internal memory size switching register (IMS) and internal expansion RAM size switching register (IXS) after a reset release are constant (IMS = CFH, IXS = 0CH) in all products of the 78K0/Kx2 microcontrollers, regardless of the internal memory capacity. Therefore, set the value corresponding to each product as indicated in Tables 3-1 and 3-2.

4. The ROM and RAM capacities of the products with the on-chip debug function can be debugged by setting IMS and IXS, according to the debug target products. Set IMS and IXS according to the debug target products.

Remark The special function register (SFR) mounted depend on the product. See **3.2.3 Special function registers (SFRs)**.

Table 23-2. Hardware Statuses After Reset Acknowledgment (2/4)

Hardware		Status After Reset Acknowledgment[Note 1]
Memory bank select register (BANK)		00H
Clock operation mode select register (OSCCTL)		00H
Processor clock control register (PCC)		01H
Internal oscillation mode register (RCM)		80H
Main OSC control register (MOC)		80H
Main clock mode register (MCM)		00H
Oscillation stabilization time counter status register (OSTC)		00H
Oscillation stabilization time select register (OSTS)		05H
16-bit timer/event counters 00, 01	Timer counters 00, 01 (TM00, TM01)	0000H
	Capture/compare registers 000, 010, 001, 011 (CR000, CR010, CR001, CR011)	0000H
	Mode control registers 00, 01 (TMC00, TMC01)	00H
	Prescaler mode registers 00, 01 (PRM00, PRM01)	00H
	Capture/compare control registers 00, 01 (CRC00, CRC01)	00H
	Timer output control registers 00, 01 (TOC00, TOC01)	00H
8-bit timer/event counters 50, 51	Timer counters 50, 51 (TM50, TM51)	00H
	Compare registers 50, 51 (CR50, CR51)	00H
	Timer clock selection registers 50, 51 (TCL50, TCL51)	00H
	Mode control registers 50, 51 (TMC50, TMC51)	00H
8-bit timers H0, H1	Compare registers 00, 10, 01, 11 (CMP00, CMP10, CMP01, CMP11)	00H
	Mode registers (TMHMD0, TMHMD1)	00H
	Carrier control register 1 (TMCYC1)[Note 2]	00H
Watch timer	Operation mode register (WTM)	00H
Clock output/buzzer output controller	Clock output selection register (CKS)	00H
Watchdog timer	Enable register (WDTE)	1AH/9AH[Note 3]
A/D converter	10-bit A/D conversion result register (ADCR)	0000H
	8-bit A/D conversion result register (ADCRH)	00H
	Mode register (ADM)	00H
	Analog input channel specification register (ADS)	00H
	A/D port configuration register (ADPC)	00H
Serial interface UART0	Receive buffer register 0 (RXB0)	FFH
	Transmit shift register 0 (TXS0)	FFH
	Asynchronous serial interface operation mode register 0 (ASIM0)	01H
	Asynchronous serial interface reception error status register 0 (ASIS0)	00H
	Baud rate generator control register 0 (BRGC0)	1FH

Notes 1. During reset signal generation or oscillation stabilization time wait, only the PC contents among the hardware statuses become undefined. All other hardware statuses remain unchanged after reset.

2. 8-bit timer H1 only.

3. The reset value of WDTE is determined by the option byte setting.

Remark The special function register (SFR) mounted depend on the product. See **3.2.3 Special function registers (SFRs)**.

Table 23-2. Hardware Statuses After Reset Acknowledgment (3/4)

Hardware		Status After Reset Acknowledgment[Note]
Serial interface UART6	Receive buffer register 6 (RXB6)	FFH
	Transmit buffer register 6 (TXB6)	FFH
	Asynchronous serial interface operation mode register 6 (ASIM6)	01H
	Asynchronous serial interface reception error status register 6 (ASIS6)	00H
	Asynchronous serial interface transmission status register 6 (ASIF6)	00H
	Clock selection register 6 (CKSR6)	00H
	Baud rate generator control register 6 (BRGC6)	FFH
	Asynchronous serial interface control register 6 (ASICL6)	16H
	Input switch control register (ISC)	00H
Serial interfaces CSI10, CSI11	Transmit buffer registers 10, 11 (SOTB10, SOTB11)	00H
	Serial I/O shift registers 10, 11 (SIO10, SIO11)	00H
	Serial operation mode registers 10, 11 (CSIM10, CSIM11)	00H
	Serial clock selection registers 10, 11 (CSIC10, CSIC11)	00H
Serial interface CSIA0	Serial operation mode specification register 0 (CSIMA0)	00H
	Serial status register 0 (CSIS0)	00H
	Serial trigger register 0 (CSIT0)	00H
	Divisor value selection register 0 (BRGCA0)	03H
	Automatic data transfer address point specification register 0 (ADTP0)	00H
	Automatic data transfer interval specification register 0 (ADTI0)	00H
	Serial I/O shift register 0 (SIOA0)	00H
	Automatic data transfer address count register 0 (ADTC0)	00H
Serial interface IIC0	Shift register 0 (IIC0)	00H
	Control register 0 (IICC0)	00H
	Slave address register 0 (SVA0)	00H
	Clock selection register 0 (IICCL0)	00H
	Function expansion register 0 (IICX0)	00H
	Status register 0 (IICS0)	00H
	Flag register 0 (IICF0)	00H
Multiplier/divider	Remainder data register 0 (SDR0)	0000H
	Multiplication/division data register A0 (MDA0H, MDA0L)	0000H
	Multiplication/division data register B0 (MDB0)	0000H
	Multiplier/divider control register 0 (DMUC0)	00H
Key interrupt	Key return mode register (KRM)	00H

Note During reset signal generation or oscillation stabilization time wait, only the PC contents among the hardware statuses become undefined. All other hardware statuses remain unchanged after reset.

Remark The special function register (SFR) mounted depend on the product. See **3.2.3 Special function registers (SFRs)**.

Table 23-2. Hardware Statuses After Reset Acknowledgment (4/4)

Hardware		Status After Reset Acknowledgment[Note 1]
Reset function	Reset control flag register (RESF)	00H[Note 2]
Low-voltage detector	Low-voltage detection register (LVIM)	00H[Note 2]
	Low-voltage detection level selection register (LVIS)	00H[Note 2]
Interrupt	Request flag registers 0L, 0H, 1L, 1H (IF0L, IF0H, IF1L, IF1H)	00H
	Mask flag registers 0L, 0H, 1L, 1H (MK0L, MK0H, MK1L, MK1H)	FFH
	Priority specification flag registers 0L, 0H, 1L, 1H (PR0L, PR0H, PR1L, PR1H)	FFH
	External interrupt rising edge enable register (EGP)	00H
	External interrupt falling edge enable register (EGN)	00H

Notes 1. During reset signal generation or oscillation stabilization time wait, only the PC contents among the hardware statuses become undefined. All other hardware statuses remain unchanged after reset.

2. These values vary depending on the reset source.

Register \ Reset Source		$\overline{\text{RESET}}$ Input	Reset by POC	Reset by WDT	Reset by LVI
RESF	WDTRF flag	Cleared (0)	Cleared (0)	Set (1)	Held
	LVIRF flag			Held	Set (1)
LVIM		Cleared (00H)	Cleared (00H)	Cleared (00H)	Held
LVIS					

Remark The special function register (SFR) mounted depend on the product. See **3.2.3 Special function registers (SFRs)**.

23.1 Register for Confirming Reset Source

Many internal reset generation sources exist in the 78K0/Kx2 microcontrollers. The reset control flag register (RESF) is used to store which source has generated the reset request.

RESF can be read by an 8-bit memory manipulation instruction.

$\overline{\text{RESET}}$ input, reset by power-on-clear (POC) circuit, and reading RESF set RESF to 00H.

Figure 23-5. Format of Reset Control Flag Register (RESF)

Address: FFACH After reset: 00H[Note] R

Symbol	7	6	5	4	3	2	1	0
RESF	0	0	0	WDTRF	0	0	0	LVIRF

WDTRF	Internal reset request by watchdog timer (WDT)
0	Internal reset request is not generated, or RESF is cleared.
1	Internal reset request is generated.

LVIRF	Internal reset request by low-voltage detector (LVI)
0	Internal reset request is not generated, or RESF is cleared.
1	Internal reset request is generated.

Note The value after reset varies depending on the reset source.

Caution Do not read data by a 1-bit memory manipulation instruction.

The status of RESF when a reset request is generated is shown in Table 23-3.

Table 23-3. RESF Status When Reset Request Is Generated

Reset Source / Flag	$\overline{\text{RESET}}$ Input	Reset by POC	Reset by WDT	Reset by LVI
WDTRF	Cleared (0)	Cleared (0)	Set (1)	Held
LVIRF			Held	Set (1)

CHAPTER 24 POWER-ON-CLEAR CIRCUIT

24.1 Functions of Power-on-Clear Circuit

The power-on-clear circuit (POC) is mounted onto all 78K0/Kx2 microcontroller products.
The power-on-clear circuit has the following functions.

- Generates internal reset signal at power on.
  In the 1.59 V POC mode (option byte: POCMODE = 0), the reset signal is released when the supply voltage (V_{DD}) exceeds 1.59 V ±0.15 V.
  In the 2.7 V/1.59 V POC mode (option byte: POCMODE = 1), the reset signal is released when the supply voltage (V_{DD}) exceeds 2.7 V ±0.2 V.

- Compares supply voltage (V_{DD}) and detection voltage (V_{POC} = 1.59 V ±0.15 V), generates internal reset signal when $V_{DD} < V_{POC}$.

Caution If an internal reset signal is generated in the POC circuit, the reset control flag register (RESF) is cleared to 00H.

Remark 78K0/Kx2 microcontrollers incorporate multiple hardware functions that generate an internal reset signal. A flag that indicates the reset source is located in the reset control flag register (RESF) for when an internal reset signal is generated by the watchdog timer (WDT) or low-voltage-detector (LVI). RESF is not cleared to 00H and the flag is set to 1 when an internal reset signal is generated by WDT or LVI.
For details of RESF, see **CHAPTER 23 RESET FUNCTION**.

24.2 Configuration of Power-on-Clear Circuit

The block diagram of the power-on-clear circuit is shown in Figure 24-1.

Figure 24-1. Block Diagram of Power-on-Clear Circuit

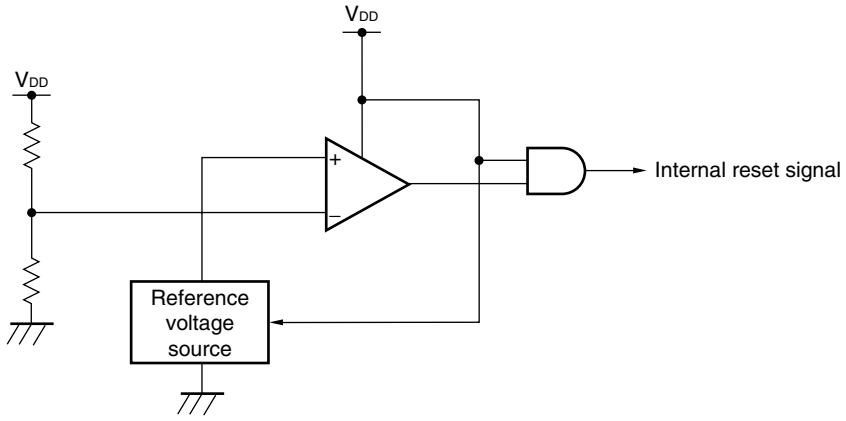

24.3 Operation of Power-on-Clear Circuit

(1) In 1.59 V POC mode (option byte: POCMODE = 0)

- An internal reset signal is generated on power application. When the supply voltage (V_{DD}) exceeds the detection voltage (V_{POC} = 1.59 V ±0.15 V), the reset status is released.
- The supply voltage (V_{DD}) and detection voltage (V_{POC} = 1.59 V ±0.15 V) are compared. When $V_{DD} < V_{POC}$, the internal reset signal is generated. It is released when $V_{DD} \geq V_{POC}$.

(2) In 2.7 V/1.59 V POC mode (option byte: POCMODE = 1)

- An internal reset signal is generated on power application. When the supply voltage (V_{DD}) exceeds the detection voltage (V_{DDPOC} = 2.7 V ±0.2 V), the reset status is released.
- The supply voltage (V_{DD}) and detection voltage (V_{POC} = 1.59 V ±0.15 V) are compared. When $V_{DD} < V_{POC}$, the internal reset signal is generated. It is released when $V_{DD} \geq V_{DDPOC}$.

The timing of generation of the internal reset signal by the power-on-clear circuit and low-voltage detector is shown below.

Figure 24-2. Timing of Generation of Internal Reset Signal by Power-on-Clear Circuit and Low-Voltage Detector (1/2)

(1) In 1.59 V POC mode (option byte: POCMODE = 0)

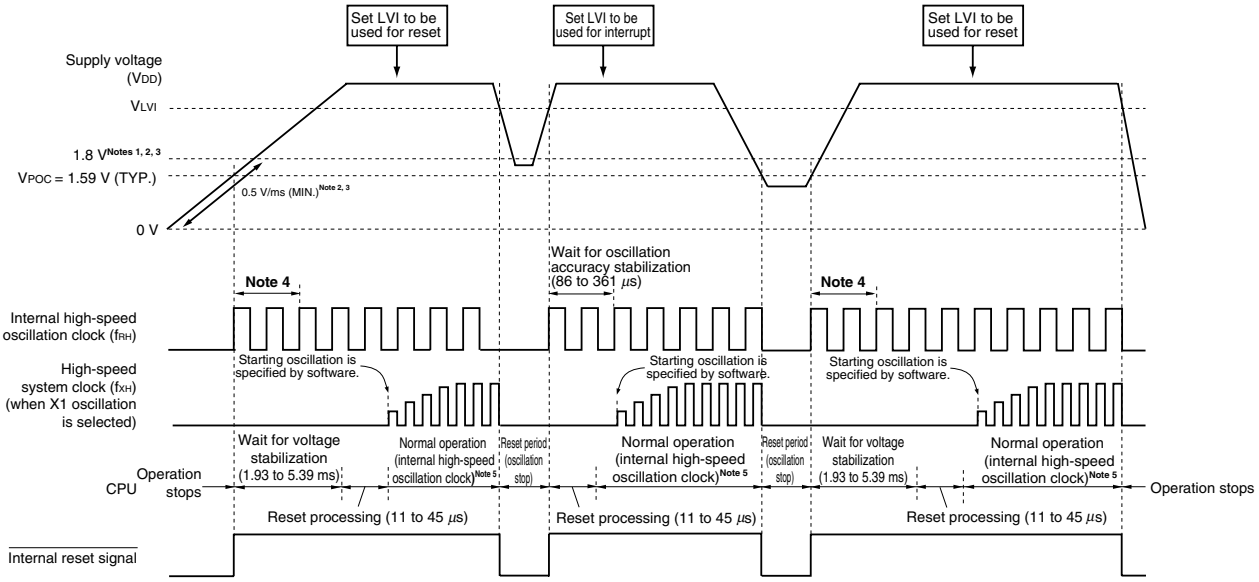

Notes 1. The guaranteed operation range for the standard and (A) grade products is 1.8 V ≤ V_{DD} ≤ 5.5 V, and 2.7 V ≤ V_{DD} ≤ 5.5 V for the (A2) grade products. To set the voltage range below the guaranteed operation range to the reset state when the supply voltage falls, use the reset function of the low-voltage detector, or input a low level to the $\overline{\text{RESET}}$ pin.

2. With the standard and (A) grade products, if the voltage rises to 1.8 V at a rate slower than 0.5 V/ms (MIN.) on power application, input a low level to the $\overline{\text{RESET}}$ pin after power application and before the voltage reaches 1.8 V, or set the 2.7 V/1.59 V POC mode by using an option byte (POCMODE = 1).

3. With the (A2) grade products, if the voltage rises to 2.7 V at a rate slower than 0.75 V/ms (MIN.) on power application, input a low level to the $\overline{\text{RESET}}$ pin after power application and before the voltage reaches 2.7 V.

4. The oscillation accuracy stabilization time of the internal high-speed oscillation clock is included in the internal voltage stabilization time.

5. The CPU clock can be switched from the internal high-speed oscillation clock to the high-speed system clock or to the subsystem clock Note 6. To use the X1 clock, use the OSTC register to confirm the lapse of the oscillation stabilization time. To use the XT1 clock Note 6, use the timer function for confirmation of the lapse of the stabilization time.

6. The 78K0/KB2 is not provided with subsystem clock and XT1 clock.

Caution Set the low-voltage detector by software after the reset status is released (see CHAPTER 25 LOW-VOLTAGE DETECTOR).

Remark V_{LVI}: LVI detection voltage
V_{POC}: POC detection voltage

Figure 24-2. Timing of Generation of Internal Reset Signal by Power-on-Clear Circuit and Low-Voltage Detector (2/2)

(2) In 2.7 V/1.59 V POC mode (option byte: POCMODE = 1)

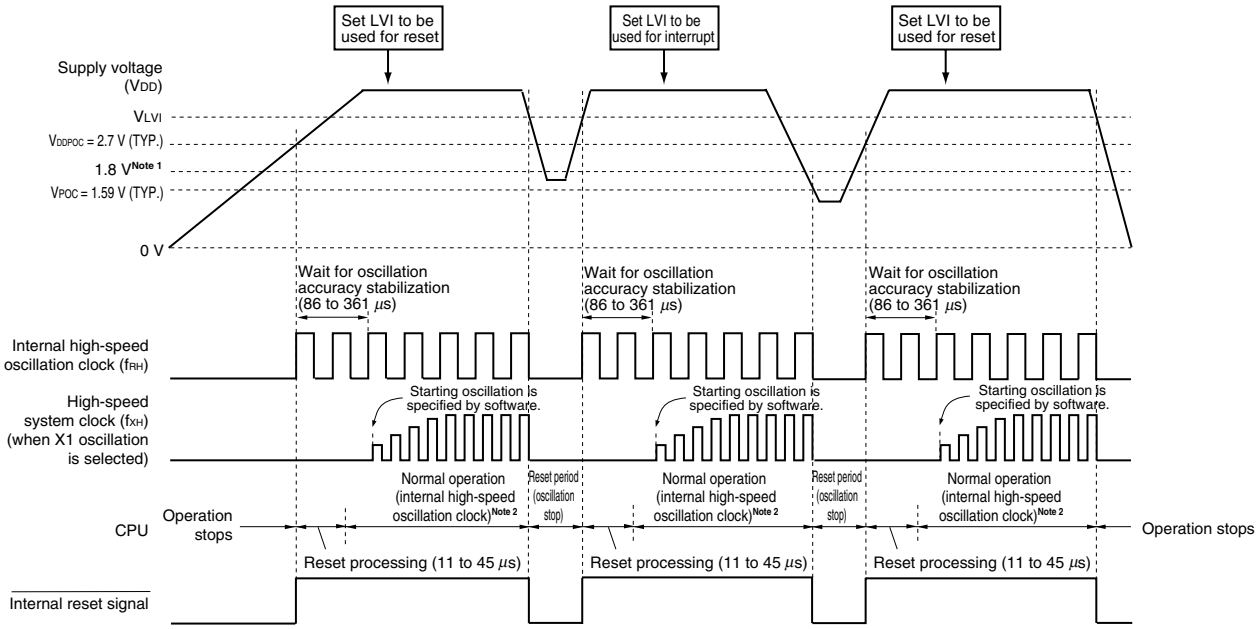

Notes 1. The guaranteed operation range for the standard and (A) grade products is 1.8 V ≤ V_{DD} ≤ 5.5 V, and 2.7 V ≤ V_{DD} ≤ 5.5 V for the (A2) grade products. To set the voltage range below the guaranteed operation range to the reset state when the supply voltage falls, use the reset function of the low-voltage detector, or input a low level to the $\overline{\text{RESET}}$ pin.

2. The CPU clock can be switched from the internal high-speed oscillation clock to the high-speed system clock or subsystem clock[Note 3]. To use the X1 clock, use the OSTC register to confirm the lapse of the oscillation stabilization time. To use the XT1 clock[Note 3], use the timer function for confirmation of the lapse of the stabilization time.

3. The 78K0/KB2 is not provided with subsystem clock and XT1 clock.

Cautions 1. Set the low-voltage detector by software after the reset status is released (see CHAPTER 25 LOW-VOLTAGE DETECTOR).

2. A voltage oscillation stabilization time of 1.93 to 5.39 ms is required after the supply voltage reaches 1.59 V (TYP.). If the supply voltage rises from 1.59 V (TYP.) to 2.7 V (TYP.) within 1.93 ms, the power supply oscillation stabilization time of 0 to 5.39 ms is automatically generated before reset processing.

Remark V_{LVI}: LVI detection voltage
V_{POC}: POC detection voltage

24.4 Cautions for Power-on-Clear Circuit

In a system where the supply voltage (V_{DD}) fluctuates for a certain period in the vicinity of the POC detection voltage (V_{POC}), the system may be repeatedly reset and released from the reset status. In this case, the time from release of reset to the start of the operation of the microcontroller can be arbitrarily set by taking the following action.

<Action>

After releasing the reset signal, wait for the supply voltage fluctuation period of each system by means of a software counter that uses a timer, and then initialize the ports.

Figure 24-3. Example of Software Processing After Reset Release (1/2)

• If supply voltage fluctuation is 50 ms or less in vicinity of POC detection voltage

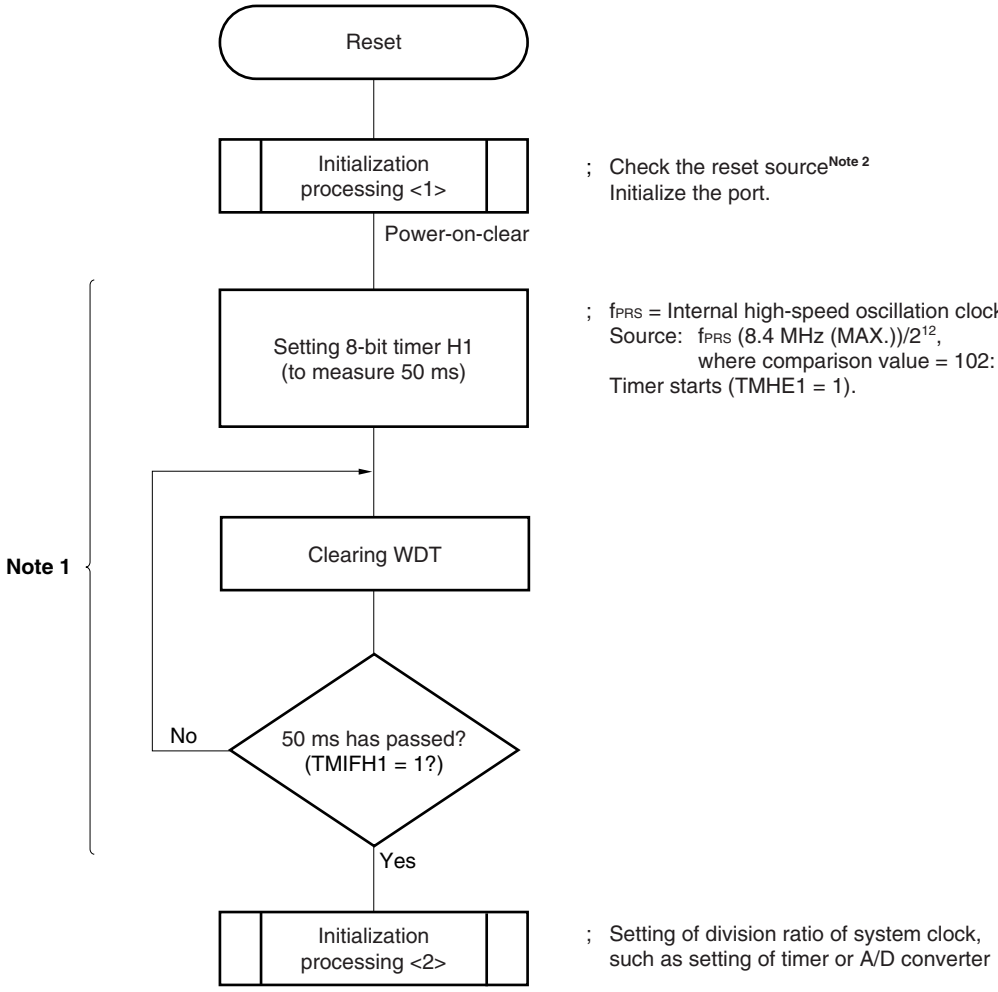

Notes 1. If reset is generated again during this period, initialization processing <2> is not started.

2. A flowchart is shown on the next page.

Figure 24-3. Example of Software Processing After Reset Release (2/2)

• Checking reset source

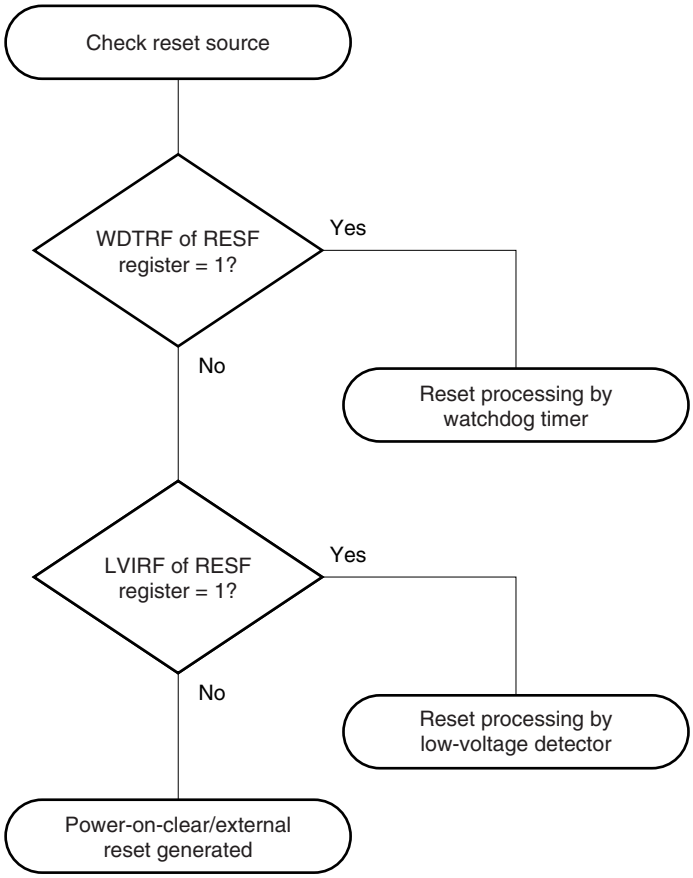

CHAPTER 25 LOW-VOLTAGE DETECTOR

25.1 Functions of Low-Voltage Detector

The low-voltage detector (LVI) is mounted onto all 78K0/Kx2 microcontroller products.
The low-voltage detector has the following functions.

- The LVI circuit compares the supply voltage (V_{DD}) with the detection voltage (V_{LVI}) or the input voltage from an external input pin (EXLVI) with the detection voltage (V_{EXLVI} = 1.21 V (TYP.): fixed), and generates an internal reset or internal interrupt signal.
- The supply voltage (V_{DD}) or input voltage from an external input pin (EXLVI) can be selected by software.
- Reset or interrupt function can be selected by software.
- Detection levels (16 levels [Note]) of supply voltage can be changed by software.
- Operable in STOP mode.

Note Standard products and (A) grade products: 16 levels
(A2) grade products: 10 levels

The reset and interrupt signals are generated as follows depending on selection by software.

Selection of Level Detection of Supply Voltage (V_{DD}) (LVISEL = 0)		Selection Level Detection of Input Voltage from External Input Pin (EXLVI) (LVISEL = 1)	
Selects reset (LVIMD = 1).	Selects interrupt (LVIMD = 0).	Selects reset (LVIMD = 1).	Selects interrupt (LVIMD = 0).
Generates an internal reset signal when $V_{DD} < V_{LVI}$ and releases the reset signal when $V_{DD} \geq V_{LVI}$.	Generates an internal interrupt signal when V_{DD} drops lower than V_{LVI} ($V_{DD} < V_{LVI}$) or when V_{DD} becomes V_{LVI} or higher ($V_{DD} \geq V_{LVI}$).	Generates an internal reset signal when EXLVI < V_{EXLVI} and releases the reset signal when EXLVI ≥ V_{EXLVI}.	Generates an internal interrupt signal when EXLVI drops lower than V_{EXLVI} (EXLVI < V_{EXLVI}) or when EXLVI becomes V_{EXLVI} or higher (EXLVI ≥ V_{EXLVI}).

Remark LVISEL: Bit 2 of low-voltage detection register (LVIM)
LVIMD: Bit 1 of LVIM

While the low-voltage detector is operating, whether the supply voltage or the input voltage from an external input pin is more than or less than the detection level can be checked by reading the low-voltage detection flag (LVIF: bit 0 of LVIM).

When the low-voltage detector is used to reset, bit 0 (LVIRF) of the reset control flag register (RESF) is set to 1 if reset occurs. For details of RESF, see **CHAPTER 23 RESET FUNCTION**.

25.2 Configuration of Low-Voltage Detector

The block diagram of the low-voltage detector is shown in Figure 25-1.

Figure 25-1. Block Diagram of Low-Voltage Detector

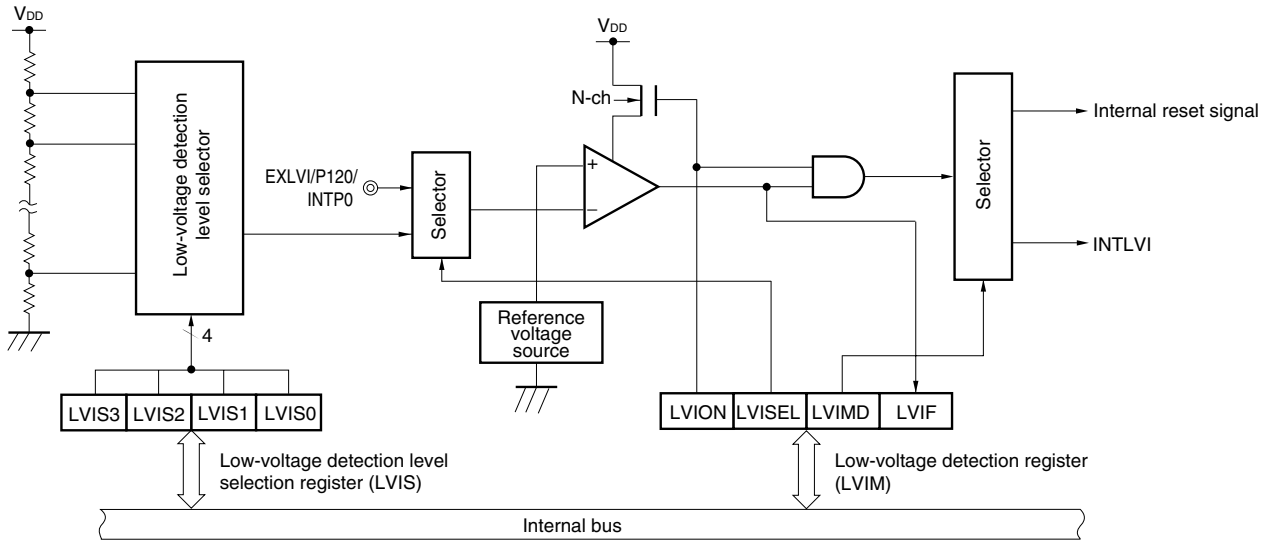

25.3 Registers Controlling Low-Voltage Detector

The low-voltage detector is controlled by the following registers.

- Low-voltage detection register (LVIM)
- Low-voltage detection level selection register (LVIS)
- Port mode register 12 (PM12)

(1) Low-voltage detection register (LVIM)

This register sets low-voltage detection and the operation mode.

This register can be set by a 1-bit or 8-bit memory manipulation instruction.

The generation of a reset signal other than an LVI reset clears this register to 00H.

Figure 25-2. Format of Low-Voltage Detection Register (LVIM)

Address: FFBEH After reset: 00H[Note 1] R/W[Note 2]

Symbol	<7>	6	5	4	3	<2>	<1>	<0>
LVIM	LVION	0	0	0	0	LVISEL	LVIMD	LVIF

LVION[Notes 3, 4]	Enables low-voltage detection operation
0	Disables operation
1	Enables operation

LVISEL[Note 3]	Voltage detection selection
0	Detects level of supply voltage (V_{DD})
1	Detects level of input voltage from external input pin (EXLVI)

LVIMD[Note 3]	Low-voltage detection operation mode (interrupt/reset) selection
0	• LVISEL = 0: Generates an internal interrupt signal when the supply voltage (V_{DD}) drops lower than the detection voltage (V_{LVI}) ($V_{DD} < V_{LVI}$) or when V_{DD} becomes V_{LVI} or higher ($V_{DD} \geq V_{LVI}$). • LVISEL = 1: Generates an interrupt signal when the input voltage from an external input pin (EXLVI) drops lower than the detection voltage (V_{EXLVI}) (EXLVI < V_{EXLVI}) or when EXLVI becomes V_{EXLVI} or higher (EXLVI ≥ V_{EXLVI}).
1	• LVISEL = 0: Generates an internal reset signal when the supply voltage (V_{DD}) < detection voltage (V_{LVI}) and releases the reset signal when $V_{DD} \geq V_{LVI}$. • LVISEL = 1: Generates an internal reset signal when the input voltage from an external input pin (EXLVI) < detection voltage (V_{EXLVI}) and releases the reset signal when EXLVI ≥ V_{EXLVI}.

LVIF	Low-voltage detection flag
0	• LVISEL = 0: Supply voltage (V_{DD}) ≥ detection voltage (V_{LVI}), or when operation is disabled • LVISEL = 1: Input voltage from external input pin (EXLVI) ≥ detection voltage (V_{EXLVI}), or when operation is disabled
1	• LVISEL = 0: Supply voltage (V_{DD}) < detection voltage (V_{LVI}) • LVISEL = 1: Input voltage from external input pin (EXLVI) < detection voltage (V_{EXLVI})

Notes 1. This bit is cleared to 00H upon a reset other than an LVI reset.

2. Bit 0 is read-only.

3. LVION, LVIMD, and LVISEL are cleared to 0 in the case of a reset other than an LVI reset. These are not cleared to 0 in the case of an LVI reset.

4. When LVION is set to 1, operation of the comparator in the LVI circuit is started. Use software to wait for an operation stabilization time (10 μs (MIN.)) from when LVION is set to 1 until operation is stabilized. After operation has stabilized, the external input of 200 μs (MIN.) (Minimum pulse width: 200 μs (MIN.)) is required from when a state below LVI detection voltage has been entered, until LVIF is set (1).

Cautions 1. To stop LVI, follow either of the procedures below.

- **When using 8-bit memory manipulation instruction: Write 00H to LVIM.**
- **When using 1-bit memory manipulation instruction: Clear LVION to 0.**

2. Input voltage from external input pin (EXLVI) must be EXLVI < V_{DD}.

Cautions 3. When using LVI as an interrupt, if LVION is cleared (0) in a state below the LVI detection voltage, an INTLVI signal is generated and LVIIF becomes 1.

4. With the conventional-specification products (μPD78F05xx and 78F05xxD), after an LVI reset has been generated, do not write values to LVIS and LVIM when LVION = 1.

(2) Low-voltage detection level selection register (LVIS)

This register selects the low-voltage detection level.

This register can be set by a 1-bit or 8-bit memory manipulation instruction.

The generation of a reset signal other than an LVI reset clears this register to 00H.

Figure 25-3. Format of Low-Voltage Detection Level Selection Register (LVIS)

Address: FFBFH After reset: 00H[Note 1] R/W

Symbol	7	6	5	4	3	2	1	0
LVIS	0	0	0	0	LVIS3	LVIS2	LVIS1	LVIS0

LVIS3	LVIS2	LVIS1	LVIS0	Detection level
0	0	0	0	V_{LVI0} (4.24 V ±0.1 V)
0	0	0	1	V_{LVI1} (4.09 V ±0.1 V)
0	0	1	0	V_{LVI2} (3.93 V ±0.1 V)
0	0	1	1	V_{LVI3} (3.78 V ±0.1 V)
0	1	0	0	V_{LVI4} (3.62 V ±0.1 V)
0	1	0	1	V_{LVI5} (3.47 V ±0.1 V)
0	1	1	0	V_{LVI6} (3.32 V ±0.1 V)
0	1	1	1	V_{LVI7} (3.16 V ±0.1 V)
1	0	0	0	V_{LVI8} (3.01 V ±0.1 V)
1	0	0	1	V_{LVI9} (2.85 V ±0.1 V)
1	0	1	0	V_{LVI10} (2.70 V ±0.1 V) [Note 2]
1	0	1	1	V_{LVI11} (2.55 V ±0.1 V) [Note 2]
1	1	0	0	V_{LVI12} (2.39 V ±0.1 V) [Note 2]
1	1	0	1	V_{LVI13} (2.24 V ±0.1 V) [Note 2]
1	1	1	0	V_{LVI14} (2.08 V ±0.1 V) [Note 2]
1	1	1	1	V_{LVI15} (1.93 V ±0.1 V) [Note 2]

Notes 1. The value of LVIS is not reset but retained as is, upon a reset by LVI. It is cleared to 00H upon other resets.

2. Do not set V_{LVI10} to V_{LVI15} for (A2) grade products.

Cautions 1. Be sure to clear bits 4 to 7 to "0".

2. Do not change the value of LVIS during LVI operation.

3. When an input voltage from the external input pin (EXLVI) is detected, the detection voltage (V_{EXLVI} = 1.21 V (TYP.)) is fixed. Therefore, setting of LVIS is not necessary.

4. With the conventional-specification products (μPD78F05xx and 78F05xxD), after an LVI reset has been generated, do not write values to LVIS and LVIM when LVION = 1.

(3) Port mode register 12 (PM12)

When using the P120/EXLVI/INTP0 pin for external low-voltage detection potential input, set PM120 to 1. At this time, the output latch of P120 may be 0 or 1.

PM12 can be set by a 1-bit or 8-bit memory manipulation instruction.

Reset signal generation sets PM12 to FFH.

Figure 25-4. Format of Port Mode Register 12 (PM12)

Address: FF2CH After reset: FFH R/W

Symbol	7	6	5	4	3	2	1	0
PM12	1	1	1	PM124	PM123	PM122	PM121	PM120

PM12n	P12n pin I/O mode selection (n = 0 to 4)
0	Output mode (output buffer on)
1	Input mode (output buffer off)

Remark The format of port mode register 12 of 78K0/KB2 products is different from the above format. See **5.3 Registers Controlling Port Function (1) Port mode registers (PMxx)**.

25.4 Operation of Low-Voltage Detector

The low-voltage detector can be used in the following two modes.

(1) Used as reset (LVIMD = 1)

- If LVISEL = 0, compares the supply voltage (V_{DD}) and detection voltage (V_{LVI}), generates an internal reset signal when $V_{DD} < V_{LVI}$, and releases internal reset when $V_{DD} \geq V_{LVI}$.
- If LVISEL = 1, compares the input voltage from external input pin (EXLVI) and detection voltage (V_{EXLVI} = 1.21 V (TYP.)), generates an internal reset signal when EXLVI < V_{EXLVI}, and releases internal reset when EXLVI ≥ V_{EXLVI}.

(2) Used as interrupt (LVIMD = 0)

- If LVISEL = 0, compares the supply voltage (V_{DD}) and detection voltage (V_{LVI}). When V_{DD} drops lower than V_{LVI} ($V_{DD} < V_{LVI}$) or when V_{DD} becomes V_{LVI} or higher ($V_{DD} \geq V_{LVI}$), generates an interrupt signal (INTLVI).
- If LVISEL = 1, compares the input voltage from external input pin (EXLVI) and detection voltage (V_{EXLVI} = 1.21 V (TYP.)). When EXLVI drops lower than V_{EXLVI} (EXLVI < V_{EXLVI}) or when EXLVI becomes V_{EXLVI} or higher (EXLVI ≥ V_{EXLVI}), generates an interrupt signal (INTLVI).

While the low-voltage detector is operating, whether the supply voltage or the input voltage from an external input pin is more than or less than the detection level can be checked by reading the low-voltage detection flag (LVIF: bit 0 of LVIM).

Remark LVIMD: Bit 1 of low-voltage detection register (LVIM)
LVISEL: Bit 2 of LVIM

25.4.1 When used as reset

(1) When detecting level of supply voltage (V_{DD})

- When starting operation
  - <1> Mask the LVI interrupt (LVIMK = 1).
  - <2> Clear bit 2 (LVISEL) of the low-voltage detection register (LVIM) to 0 (detects level of supply voltage (V_{DD})) (default value).
  - <3> Set the detection voltage using bits 3 to 0 (LVIS3 to LVIS0) of the low-voltage detection level selection register (LVIS).
  - <4> Set bit 7 (LVION) of LVIM to 1 (enables LVI operation).
  - <5> Use software to wait for an operation stabilization time (10 μs (MIN.)).
  - <6> Wait until it is checked that (supply voltage (V_{DD}) $\geq$ detection voltage (V_{LVI})) by bit 0 (LVIF) of LVIM.
  - <7> Set bit 1 (LVIMD) of LVIM to 1 (generates reset when the level is detected).

  Figure 25-5 shows the timing of the internal reset signal generated by the low-voltage detector. The numbers in this timing chart correspond to <1> to <7> above.

  Cautions 1. <1> must always be executed. When LVIMK = 0, an interrupt may occur immediately after the processing in <4>.
  2. If supply voltage (V_{DD}) $\geq$ detection voltage (V_{LVI}) when LVIMD is set to 1, an internal reset signal is not generated.

- When stopping operation
  Either of the following procedures must be executed.

  - When using 8-bit memory manipulation instruction:
    Write 00H to LVIM.

  - When using 1-bit memory manipulation instruction:
    Clear LVIMD to 0 and then LVION to 0.

Figure 25-5. Timing of Low-Voltage Detector Internal Reset Signal Generation (Detects Level of Supply Voltage (V_{DD})) (1/2)

(1) In 1.59 V POC mode (option byte: POCMODE = 0)

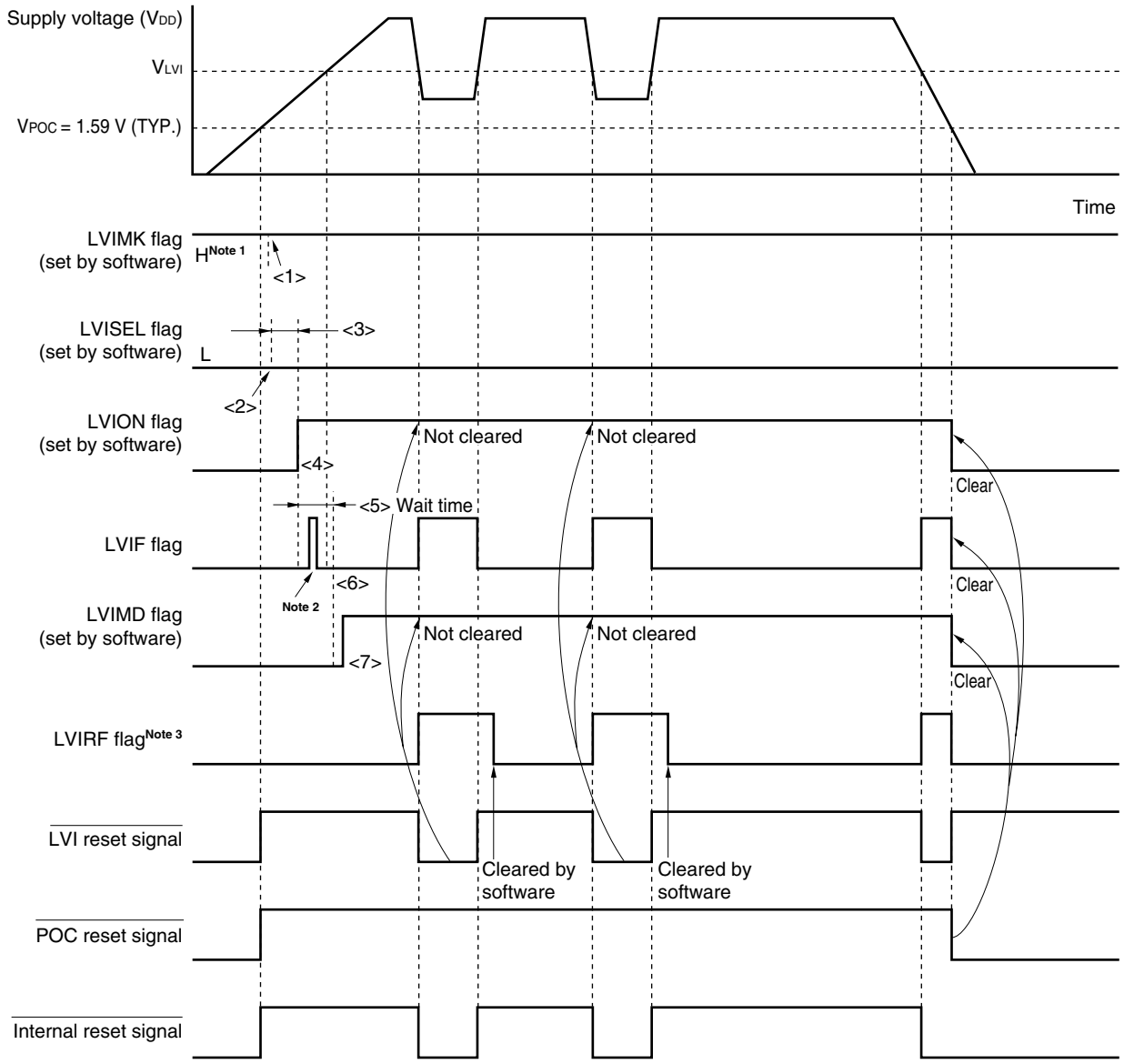

Notes 1. The LVIMK flag is set to "1" by reset signal generation.

2. The LVIF flag may be set (1).

3. LVIRF is bit 0 of the reset control flag register (RESF). For details of RESF, see **CHAPTER 23 RESET FUNCTION**.

Remark <1> to <7> in Figure 25-5 above correspond to <1> to <7> in the description of "When starting operation" in **25.4.1 (1) When detecting level of supply voltage (V_{DD})**.

Figure 25-5. Timing of Low-Voltage Detector Internal Reset Signal Generation (Detects Level of Supply Voltage (V_{DD})) (2/2)

(2) In 2.7 V/1.59 V POC mode (option byte: POCMODE = 1)

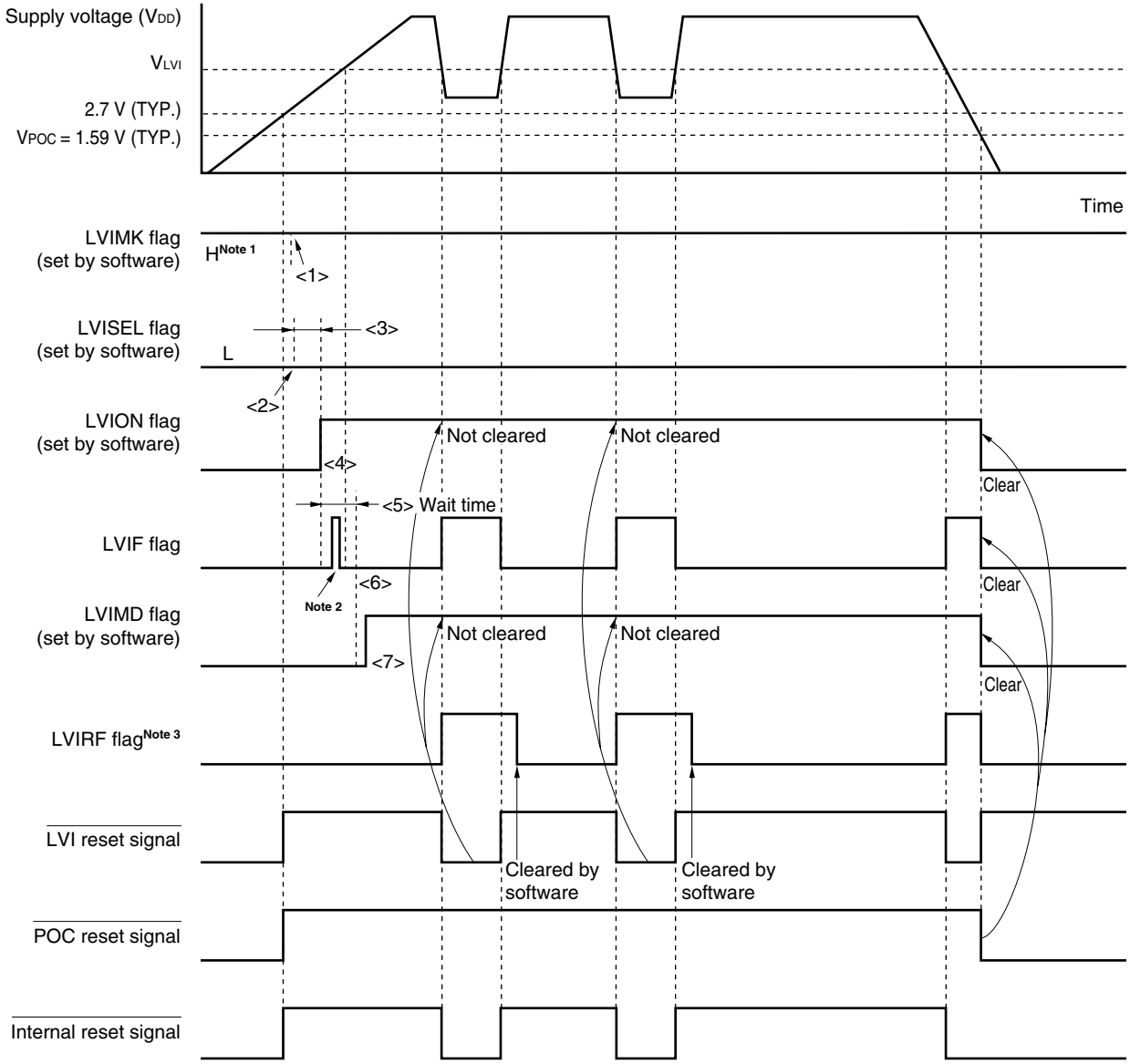

Notes 1. The LVIMK flag is set to “1” by reset signal generation.

2. The LVIF flag may be set (1).

3. LVIRF is bit 0 of the reset control flag register (RESF). For details of RESF, see **CHAPTER 23 RESET FUNCTION**.

Remark <1> to <7> in Figure 25-5 above correspond to <1> to <7> in the description of “When starting operation” in **25.4.1 (1) When detecting level of supply voltage (V_{DD})**.

(2) When detecting level of input voltage from external input pin (EXLVI)

- When starting operation
  - <1> Mask the LVI interrupt (LVIMK = 1).
  - <2> Set bit 2 (LVISEL) of the low-voltage detection register (LVIM) to 1 (detects level of input voltage from external input pin (EXLVI)).
  - <3> Set bit 7 (LVION) of LVIM to 1 (enables LVI operation).
  - <4> Use software to wait for an operation stabilization time (10 μs (MIN.)).
  - <5> Wait until it is checked that (input voltage from external input pin (EXLVI) ≥ detection voltage (V_{EXLVI} = 1.21 V (TYP.))) by bit 0 (LVIF) of LVIM.
  - <6> Set bit 1 (LVIMD) of LVIM to 1 (generates reset signal when the level is detected).

  Figure 25-6 shows the timing of the internal reset signal generated by the low-voltage detector. The numbers in this timing chart correspond to <1> to <6> above.

  Cautions 1. <1> must always be executed. When LVIMK = 0, an interrupt may occur immediately after the processing in <3>.
  2. If input voltage from external input pin (EXLVI) ≥ detection voltage (V_{EXLVI} = 1.21 V (TYP.)) when LVIMD is set to 1, an internal reset signal is not generated.
  3. Input voltage from external input pin (EXLVI) must be EXLVI < V_{DD}.

- When stopping operation
  Either of the following procedures must be executed.

  - When using 8-bit memory manipulation instruction:
    Write 00H to LVIM.

  - When using 1-bit memory manipulation instruction:
    Clear LVIMD to 0 and then LVION to 0.

Figure 25-6. Timing of Low-Voltage Detector Internal Reset Signal Generation (Detects Level of Input Voltage from External Input Pin (EXLVI))

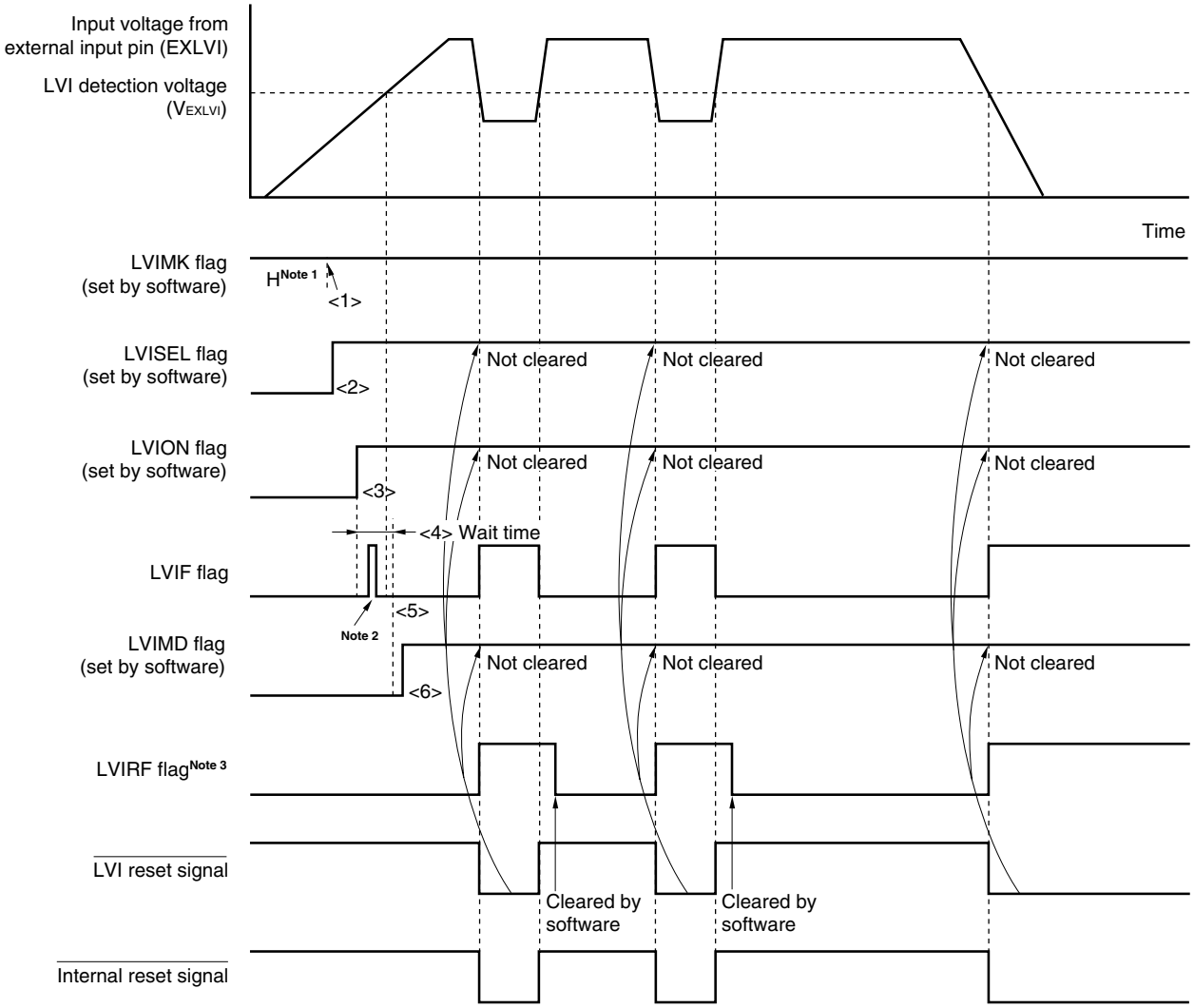

Notes 1. The LVIMK flag is set to "1" by reset signal generation.

2. The LVIF flag may be set (1).

3. LVIRF is bit 0 of the reset control flag register (RESF). For details of RESF, see **CHAPTER 23 RESET FUNCTION**.

Remark <1> to <6> in Figure 25-6 above correspond to <1> to <6> in the description of "When starting operation" in **25.4.1 (2) When detecting level of input voltage from external input pin (EXLVI)**.

25.4.2 When used as interrupt

(1) When detecting level of supply voltage (V_{DD})

- When starting operation
  - <1> Mask the LVI interrupt (LVIMK = 1).
  - <2> Clear bit 2 (LVISEL) of the low-voltage detection register (LVIM) to 0 (detects level of supply voltage (V_{DD})) (default value).
  - <3> Set the detection voltage using bits 3 to 0 (LVIS3 to LVIS0) of the low-voltage detection level selection register (LVIS).
  - <4> Clear bit 1 (LVIMD) of LVIM to 0 (generates interrupt signal when the level is detected) (default value).
  - <5> Set bit 7 (LVION) of LVIM to 1 (enables LVI operation).
  - <6> Use software to wait for an operation stabilization time (10 μs (MIN.)).
  - <7> Confirm that "supply voltage (V_{DD}) ≥ detection voltage (V_{LVI})" when detecting the falling edge of V_{DD}, or "supply voltage (V_{DD}) < detection voltage (V_{LVI})" when detecting the rising edge of V_{DD}, at bit 0 (LVIF) of LVIM.
  - <8> Clear the interrupt request flag of LVI (LVIIF) to 0.
  - <9> Release the interrupt mask flag of LVI (LVIMK).
  - <10> Execute the EI instruction (when vector interrupts are used).

  Figure 25-7 shows the timing of the interrupt signal generated by the low-voltage detector. The numbers in this timing chart correspond to <1> to <9> above.

- When stopping operation
  Either of the following procedures must be executed.

  - When using 8-bit memory manipulation instruction:
    Write 00H to LVIM.

  - When using 1-bit memory manipulation instruction:
    Clear LVION to 0.

Figure 25-7. Timing of Low-Voltage Detector Interrupt Signal Generation (Detects Level of Supply Voltage (V_{DD})) (1/2)

(1) In 1.59 V POC mode (option byte: POCMODE = 0)

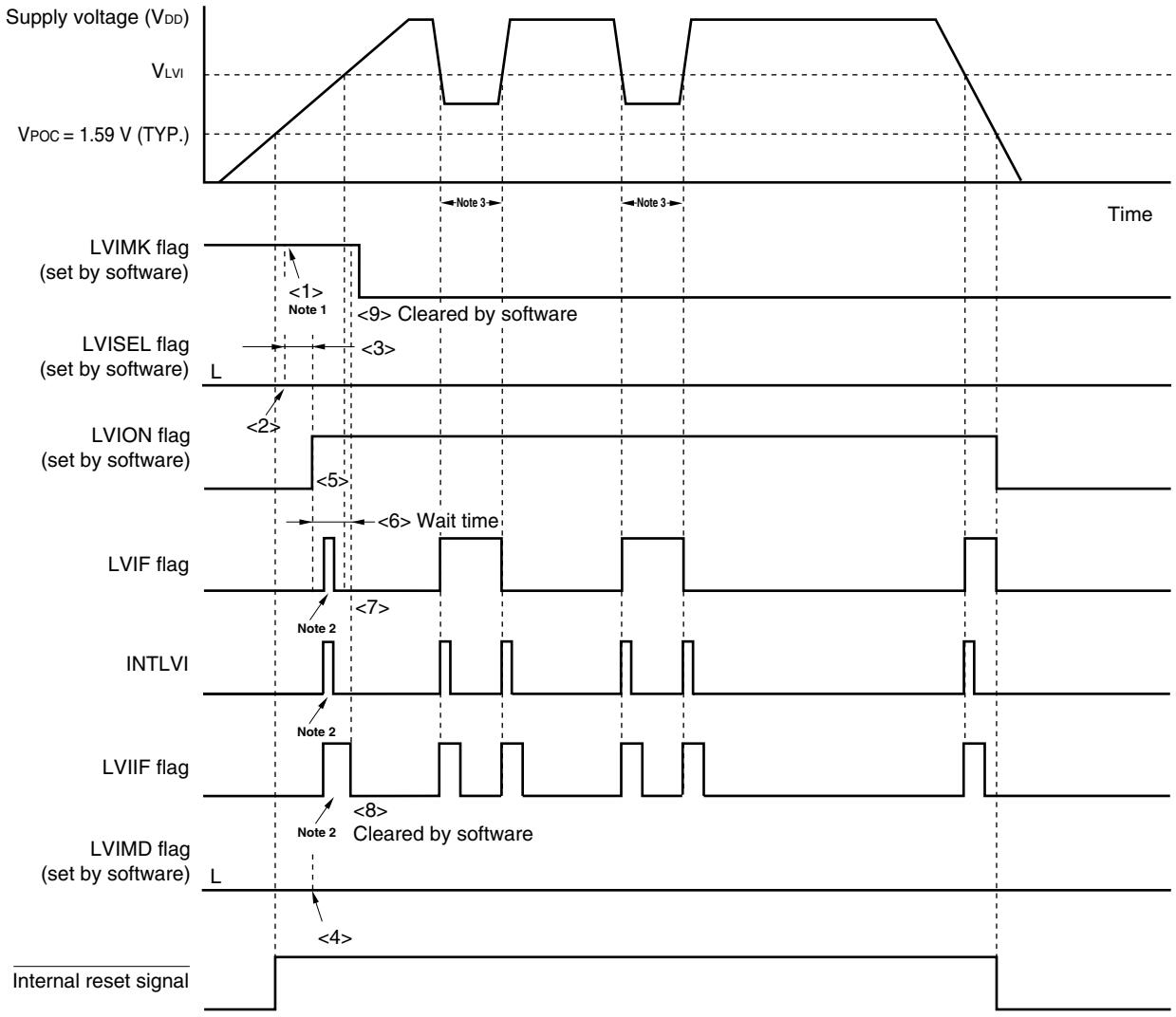

Notes 1. The LVIMK flag is set to "1" by reset signal generation.

2. The interrupt request signal (INTLVI) is generated and the LVIF and LVIIF flags may be set (1).

3. If LVION is cleared (0) in a state below the LVI detection voltage, an INTLVI signal is generated and LVIIF becomes 1.

Remark <1> to <9> in Figure 25-7 above correspond to <1> to <9> in the description of "When starting operation" in **25.4.2 (1) When detecting level of supply voltage (V_{DD})**.

Figure 25-7. Timing of Low-Voltage Detector Interrupt Signal Generation (Detects Level of Supply Voltage (V_{DD})) (2/2)

(2) In 2.7 V/1.59 V POC mode (option byte: POCMODE = 1)

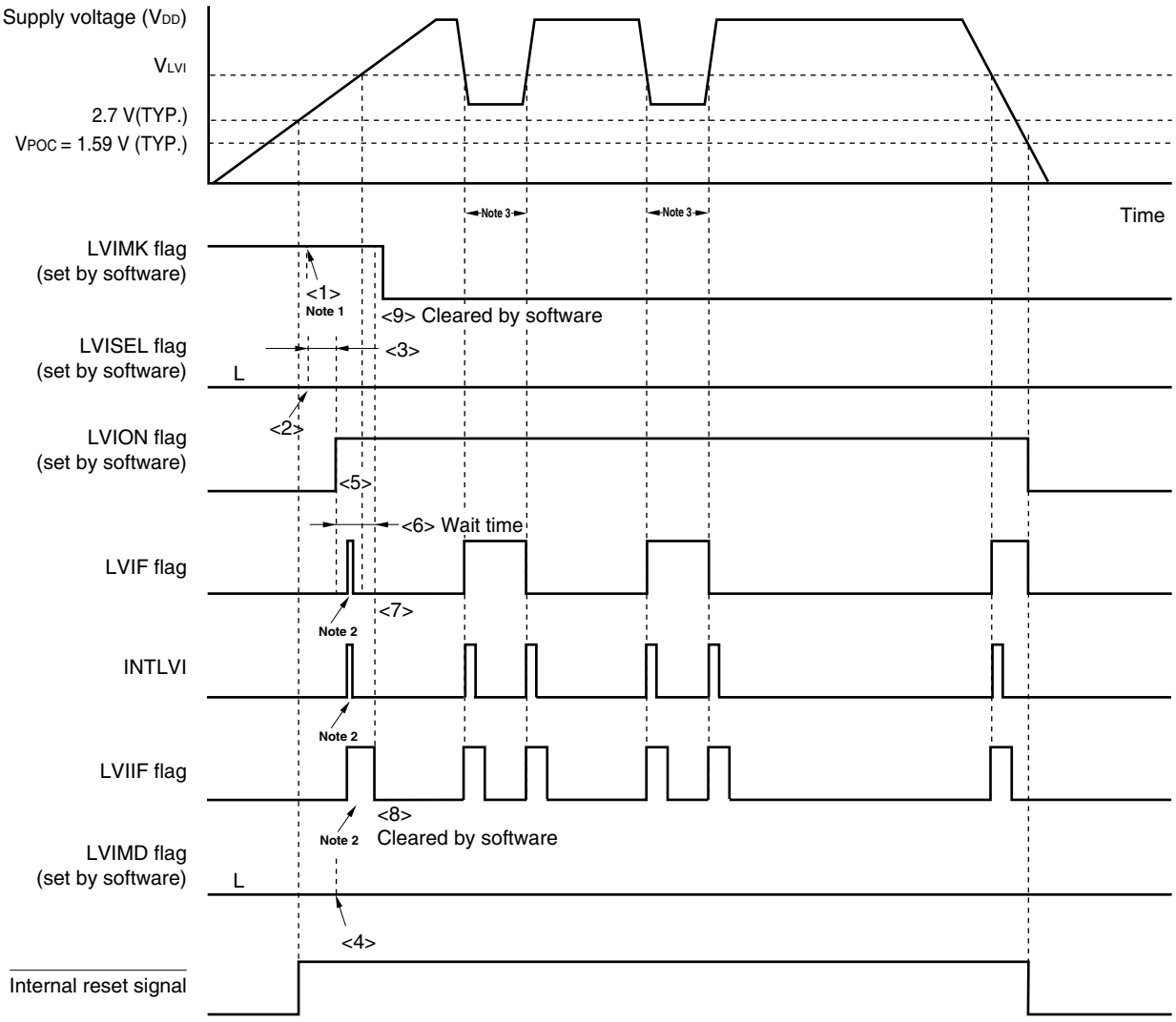

Notes 1. The LVIMK flag is set to "1" by reset signal generation.

2. The interrupt request signal (INTLVI) is generated and the LVIF and LVIIF flags may be set (1).

3. If LVION is cleared (0) in a state below the LVI detection voltage, an INTLVI signal is generated and LVIIF becomes 1.

Remark <1> to <9> in Figure 25-7 above correspond to <1> to <9> in the description of "When starting operation" in **25.4.2 (1) When detecting level of supply voltage (V_{DD})**.

(2) When detecting level of input voltage from external input pin (EXLVI)

- When starting operation
  - <1> Mask the LVI interrupt (LVIMK = 1).
  - <2> Set bit 2 (LVISEL) of the low-voltage detection register (LVIM) to 1 (detects level of input voltage from external input pin (EXLVI)).
  - <3> Clear bit 1 (LVIMD) of LVIM to 0 (generates interrupt signal when the level is detected) (default value).
  - <4> Set bit 7 (LVION) of LVIM to 1 (enables LVI operation).
  - <5> Use software to wait for an operation stabilization time (10 μs (MIN.)).
  - <6> Confirm that "input voltage from external input pin (EXLVI) ≥ detection voltage (V_{EXLVI} = 1.21 V (TYP.)" when detecting the falling edge of EXLVI, or "input voltage from external input pin (EXLVI) < detection voltage (V_{EXLVI} = 1.21 V (TYP.)" when detecting the rising edge of EXLVI, at bit 0 (LVIF) of LVIM.
  - <7> Clear the interrupt request flag of LVI (LVIIF) to 0.
  - <8> Release the interrupt mask flag of LVI (LVIMK).
  - <9> Execute the EI instruction (when vector interrupts are used).

  Figure 25-8 shows the timing of the interrupt signal generated by the low-voltage detector. The numbers in this timing chart correspond to <1> to <8> above.

  Caution Input voltage from external input pin (EXLVI) must be EXLVI < V_{DD}.

- When stopping operation
  Either of the following procedures must be executed.

  - When using 8-bit memory manipulation instruction:
    Write 00H to LVIM.

  - When using 1-bit memory manipulation instruction:
    Clear LVION to 0.

Figure 25-8. Timing of Low-Voltage Detector Interrupt Signal Generation (Detects Level of Input Voltage from External Input Pin (EXLVI))

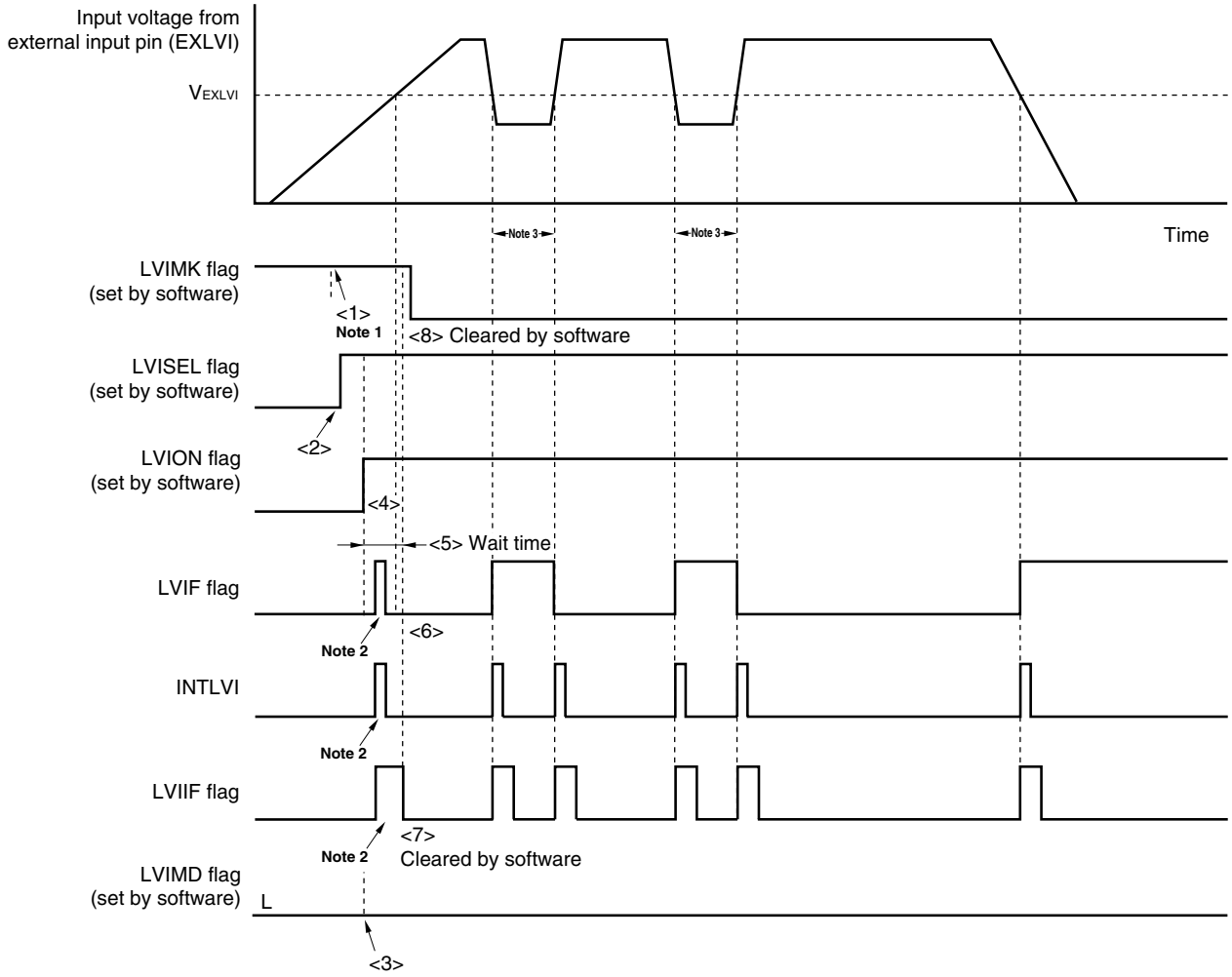

Notes 1. The LVIMK flag is set to "1" by reset signal generation.

2. The interrupt request signal (INTLVI) is generated and the LVIF and LVIIF flags may be set (1).

3. If LVION is cleared (0) in a state below the LVI detection voltage, an INTLVI signal is generated and LVIIF becomes 1.

Remark <1> to <8> in Figure 25-8 above correspond to <1> to <8> in the description of "When starting operation" in **25.4.2 (2) When detecting level of input voltage from external input pin (EXLVI)**.

25.5 Cautions for Low-Voltage Detector

In a system where the supply voltage (V_{DD}) fluctuates for a certain period in the vicinity of the LVI detection voltage (V_{LVI}), the operation is as follows depending on how the low-voltage detector is used.

(1) When used as reset

The system may be repeatedly reset and released from the reset status.

In this case, the time from release of reset to the start of the operation of the microcontroller can be arbitrarily set by taking action (1) below.

(2) When used as interrupt

Interrupt requests may be frequently generated. Take (b) of action (2) below.

<Action>

(1) When used as reset

After releasing the reset signal, wait for the supply voltage fluctuation period of each system by means of a software counter that uses a timer, and then initialize the ports (see **Figure 25-9**).

(2) When used as interrupt

(a) Confirm that "supply voltage (V_{DD}) ≥ detection voltage (V_{LVI})" when detecting the falling edge of V_{DD}, or "supply voltage (V_{DD}) < detection voltage (V_{LVI})" when detecting the rising edge of V_{DD}, in the servicing routine of the LVI interrupt by using bit 0 (LVIF) of the low-voltage detection register (LVIM). Clear bit 0 (LVIIF) of interrupt request flag register 0L (IF0L) to 0.

(b) In a system where the supply voltage fluctuation period is long in the vicinity of the LVI detection voltage, wait for the supply voltage fluctuation period, confirm that "supply voltage (V_{DD}) ≥ detection voltage (V_{LVI})" when detecting the falling edge of V_{DD}, or "supply voltage (V_{DD}) < detection voltage (V_{LVI})" when detecting the rising edge of V_{DD}, using the LVIF flag, and clear the LVIIF flag to 0.

Remark If bit 2 (LVISEL) of the low voltage detection register (LVIM) is set to "1", the meanings of the above words change as follows.

- Supply voltage (V_{DD}) → Input voltage from external input pin (EXLVI)
- Detection voltage (V_{LVI}) → Detection voltage (V_{EXLVI} = 1.21 V)

Figure 25-9. Example of Software Processing After Reset Release (1/2)

• If supply voltage fluctuation is 50 ms or less in vicinity of LVI detection voltage

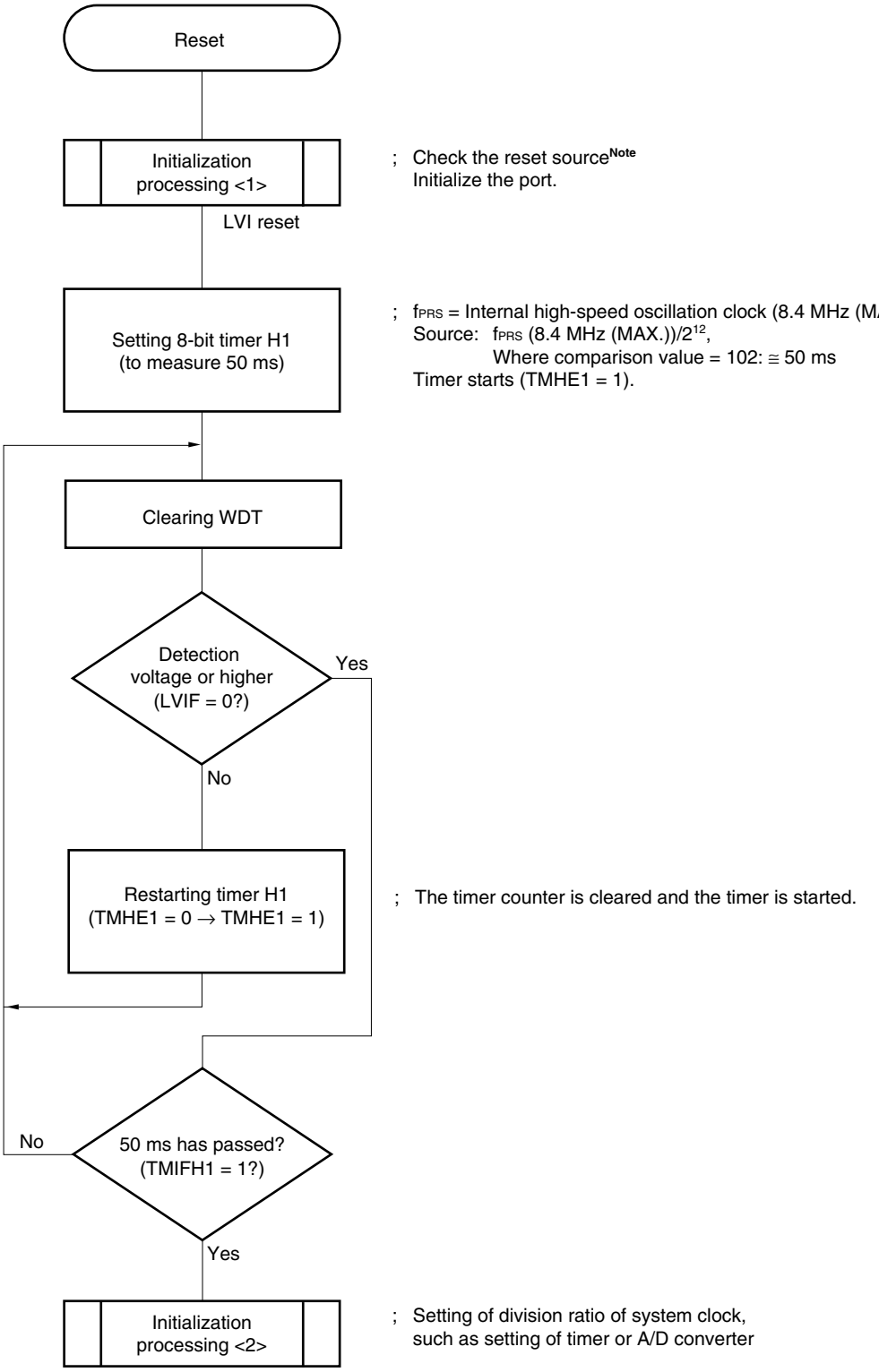

Note A flowchart is shown on the next page.

Figure 25-9. Example of Software Processing After Reset Release (2/2)

• Checking reset source

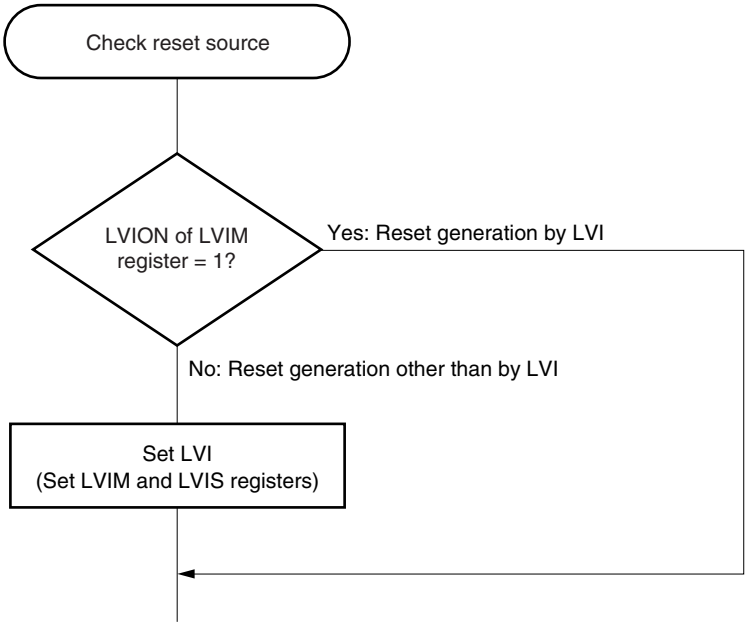

CHAPTER 26 OPTION BYTE

26.1 Functions of Option Bytes

The flash memory at 0080H to 0084H of the 78K0/Kx2 microcontrollers is an option byte area. When power is turned on or when the device is restarted from the reset status, the device automatically references the option bytes and sets specified functions. When using the product, be sure to set the following functions by using the option bytes.

When the boot swap operation is used during self-programming, 0080H to 0084H are switched to 1080H to 1084H. Therefore, set values that are the same as those of 0080H to 0084H to 1080H to 1084H in advance.

Caution Be sure to set 00H to 0082H and 0083H (0082H/1082H and 0083H/1083H when the boot swap function is used).

(1) 0080H/1080H

- Internal low-speed oscillator operation
  - Can be stopped by software
  - Cannot be stopped
- Watchdog timer overflow time setting
- Watchdog timer counter operation
  - Enabled counter operation
  - Disabled counter operation
- Watchdog timer window open period setting

Caution Set a value that is the same as that of 0080H to 1080H because 0080H and 1080H are switched during the boot swap operation.

(2) 0081H/1081H

- Selecting POC mode
  - During 2.7 V/1.59 V POC mode operation (POCMODE = 1)
    The device is in the reset state upon power application and until the supply voltage reaches 2.7 V (TYP.). It is released from the reset state when the voltage exceeds 2.7 V (TYP.). After that, POC is not detected at 2.7 V but is detected at 1.59 V (TYP.).
    With standard and (A) grade products, if the supply voltage rises to 1.8 V after power application at a rate slower than 0.5 V/ms (MIN.), use of the 2.7 V/1.59 V POC mode is recommended.
  - During 1.59 V POC mode operation (POCMODE = 0)
    The device is in the reset state upon power application and until the supply voltage reaches 1.59 V (TYP.). It is released from the reset state when the voltage exceeds 1.59 V (TYP.). After that, POC is detected at 1.59 V (TYP.), in the same manner as on power application.

Caution POCMODE can only be written by using a dedicated flash memory programmer. It cannot be set during self-programming or boot swap operation during self-programming. However, because the value of 1081H is copied to 0081H during the boot swap operation, it is recommended to set a value that is the same as that of 0081H to 1081H when the boot swap function is used.

(3) 0084H/1084H

○ On-chip debug operation control

- Disabling on-chip debug operation
- Enabling on-chip debug operation and erasing data of the flash memory in case authentication of the on-chip debug security ID fails
- Enabling on-chip debug operation and not erasing data of the flash memory even in case authentication of the on-chip debug security ID fails

Cautions 1. Be sure to set 00H (disabling on-chip debug operation) to 0084H for products not equipped with the on-chip debug function (μPD78F05xx and 78F05xxA). Also set 00H to 1084H because 0084H and 1084H are switched during the boot operation.

2. To use the on-chip debug function with a product equipped with the on-chip debug function (μPD78F05xxD and 78F05xxDA), set 02H or 03H to 0084H. Set a value that is the same as that of 0084H to 1084H because 0084H and 1084H are switched during the boot operation.

26.2 Format of Option Byte

The format of the option byte is shown below.

Figure 26-1. Format of Option Byte (1/2)

Address: 0080H/1080H[Note]

7	6	5	4	3	2	1	0
0	WINDOW1	WINDOW0	WDTON	WDCS2	WDCS1	WDCS0	LSROSC

WINDOW1	WINDOW0	Watchdog timer window open period
0	0	25%
0	1	50%
1	0	75%
1	1	100%

WDTON	Operation control of watchdog timer counter/illegal access detection
0	Counter operation disabled (counting stopped after reset), illegal access detection operation disabled
1	Counter operation enabled (counting started after reset), illegal access detection operation enabled

WDCS2	WDCS1	WDCS0	Watchdog timer overflow time
0	0	0	$2^{10}/f_{RL}$ (3.88 ms)
0	0	1	$2^{11}/f_{RL}$ (7.76 ms)
0	1	0	$2^{12}/f_{RL}$ (15.52 ms)
0	1	1	$2^{13}/f_{RL}$ (31.03 ms)
1	0	0	$2^{14}/f_{RL}$ (62.06 ms)
1	0	1	$2^{15}/f_{RL}$ (124.12 ms)
1	1	0	$2^{16}/f_{RL}$ (248.24 ms)
1	1	1	$2^{17}/f_{RL}$ (496.48 ms)

LSROSC	Internal low-speed oscillator operation
0	Can be stopped by software (stopped when 1 is written to bit 1 (LSRSTOP) of RCM register)
1	Cannot be stopped (not stopped even if 1 is written to LSRSTOP bit)

Note Set a value that is the same as that of 0080H to 1080H because 0080H and 1080H are switched during the boot swap operation.

Cautions 1. The combination of WDCS2 = WDCS1 = WDCS0 = 0 and WINDOW1 = WINDOW0 = 0 is prohibited.

2. Setting WINDOW1 = WINDOW0 = 0 is prohibited when using the watchdog timer at 1.8 V ≤ V_{DD} < 2.7 V.

3. The watchdog timer continues its operation during self-programming and EEPROM emulation of the flash memory. During processing, the interrupt acknowledge time is delayed. Set the overflow time and window size taking this delay into consideration.

4. If LSROSC = 0 (oscillation can be stopped by software), the count clock is not supplied to the watchdog timer in the HALT and STOP modes, regardless of the setting of bit 0 (LSRSTOP) of the internal oscillation mode register (RCM).
When 8-bit timer H1 operates with the internal low-speed oscillation clock, the count clock is supplied to 8-bit timer H1 even in the HALT/STOP mode.

5. Be sure to clear bit 7 to 0.

Remarks 1. f_{RL}: Internal low-speed oscillation clock frequency

2. ( ): f_{RL} = 264 kHz (MAX.)

Figure 26-1. Format of Option Byte (2/2)

Address: 0081H/1081H[Notes 1, 2]

7	6	5	4	3	2	1	0
0	0	0	0	0	0	0	POCMODE

POCMODE	POC mode selection
0	1.59 V POC mode (default)
1	2.7 V/1.59 V POC mode

Notes 1. POCMODE can only be written by using a dedicated flash memory programmer. It cannot be set during self-programming or boot swap operation during self-programming. However, because the value of 1081H is copied to 0081H during the boot swap operation, it is recommended to set a value that is the same as that of 0081H to 1081H when the boot swap function is used.

2. To change the setting for the POC mode, set the value to 0081H again after batch erasure (chip erasure) of the flash memory. The setting cannot be changed after the memory of the specified block is erased.

Caution Be sure to clear bits 7 to 1 to "0".

Address: 0082H/1082H, 0083H/1083H[Note]

7	6	5	4	3	2	1	0
0	0	0	0	0	0	0	0

Note Be sure to set 00H to 0082H and 0083H, as these addresses are reserved areas. Also set 00H to 1082H and 1083H because 0082H and 0083H are switched with 1082H and 1083H when the boot swap operation is used.

Address: 0084H/1084H[Notes1, 2]

7	6	5	4	3	2	1	0
0	0	0	0	0	0	OCDEN1	OCDEN0

OCDEN1	OCDEN0	On-chip debug operation control
0	0	Operation disabled
0	1	Setting prohibited
1	0	Operation enabled. Does not erase data of the flash memory in case authentication of the on-chip debug security ID fails.
1	1	Operation enabled. Erases data of the flash memory in case authentication of the on-chip debug security ID fails.

Notes 1. Be sure to set 00H (on-chip debug operation disabled) to 0084H for products not equipped with the on-chip debug function (μPD78F05xx and 78F05xxA). Also set 00H to 1084H because 0084H and 1084H are switched during the boot swap operation.

2. To use the on-chip debug function with a product equipped with the on-chip debug function (μPD78F05xxD and 78F05xxDA), set 02H or 03H to 0084H. Set a value that is the same as that of 0084H to 1084H because 0084H and 1084H are switched during the boot swap operation.

Remark For the on-chip debug security ID, see **CHAPTER 28 ON-CHIP DEBUG FUNCTION (μPD78F05xxD and 78F05xxDA ONLY)**.

Here is an example of description of the software for setting the option bytes.

```
OPT     CSEG   AT 0080H
OPTION: DB     30H      ; Enables watchdog timer operation (illegal access detection operation),
                        ; Window open period of watchdog timer: 50%,
                        ; Overflow time of watchdog timer: 2^10/fRL,
                        ; Internal low-speed oscillator can be stopped by software.
        DB     00H      ; 1.59 V POC mode
        DB     00H      ; Reserved area
        DB     00H      ; Reserved area
        DB     00H      ; On-chip debug operation disabled
```

Remark Referencing of the option byte is performed during reset processing. For the reset processing timing, see **CHAPTER 23 RESET FUNCTION**.

CHAPTER 27 FLASH MEMORY

The 78K0/Kx2 microcontrollers incorporates the flash memory to which a program can be written, erased, and overwritten while mounted on the board.

27.1 Internal Memory Size Switching Register

Select the internal memory capacity using the internal memory size switching register (IMS).
IMS is set by an 8-bit memory manipulation instruction.
Reset signal generation sets IMS to CFH.

Caution Be sure to set each product to the values shown in Table 27-1 after a reset release.

Figure 27-1. Format of Internal Memory Size Switching Register (IMS)

Address: FFF0H After reset: CFH R/W

Symbol	7	6	5	4	3	2	1	0
IMS	RAM2	RAM1	RAM0	0	ROM3	ROM2	ROM1	ROM0

RAM2	RAM1	RAM0	Internal high-speed RAM capacity selection
0	0	0	768 bytes
0	1	0	512 bytes
1	1	0	1024 bytes
Other than above			Setting prohibited

ROM3	ROM2	ROM1	ROM0	Internal ROM capacity selection
0	0	1	0	8 KB
0	1	0	0	16 KB
0	1	1	0	24 KB
1	0	0	0	32 KB
1	1	0	0	48 KB
1	1	1	1	60 KB
Other than above				Setting prohibited

Caution To set the memory size, set IMS and then IXS. Set the memory size so that the internal ROM and internal expansion RAM areas do not overlap.

Table 27-1. Internal Memory Size Switching Register Settings

78K0/KB2	78K0/KC2	78K0/KD2	78K0/KE2	78K0/KF2	IMS Setting
μPD78F0500, 78F0500A	–	–	–	–	42H
μPD78F0501, 78F0501A	μPD78F0511, 78F0511A	μPD78F0521, 78F0521A	μPD78F0531, 78F0531A	–	04H
μPD78F0502, 78F0502A	μPD78F0512, 78F0512A	μPD78F0522, 78F0522A	μPD78F0532, 78F0532A	–	C6H
μPD78F0503, 78F0503A, 78F0503D Note 1, 78F0503DA Note 1	μPD78F0513, 78F0513A, 78F0513D Note 1, 78F0513DA Note 1	μPD78F0523, 78F0523A	μPD78F0533, 78F0533A	–	C8H
–	μPD78F0514, 78F0514A	μPD78F0524, 78F0524A	μPD78F0534, 78F0534A	μPD78F0544, 78F0544A	CCH
–	μPD78F0515, 78F0515A, 78F0515D Note 1, 78F0515DA Note 1	μPD78F0525, 78F0525A	μPD78F0535, 78F0535A	μPD78F0545, 78F0545A	CFH
–	–	μPD78F0526, 78F0526A	μPD78F0536, 78F0536A	μPD78F0546, 78F0546A	CCH Note 2
–	–	μPD78F0527, 78F0527A, 78F0527D Note 1, 78F0527DA Note 1	μPD78F0537, 78F0537A, 78F0537D Note 1, 78F0537DA Note 1	μPD78F0547, 78F0547A, 78F0547D Note 1, 78F0547DA Note 1	CCH Note 2

Notes 1. The internal ROM capacity and internal high-speed RAM capacity of the products with the on-chip debug function can be debugged according to the debug target products. Set IMS according to the debug target products.

2. The μPD78F05x6 and 78F05x6A (x = 2 to 4) have internal ROMs of 96 KB, and the μPD78F05x7, 78F05x7A, 78F05x7D, and 78F05x7DA (x = 2 to 4) have those of 128 KB. However, the set value of IMS of these devices is the same as those of the 48 KB product because memory banks are used. For how to set the memory banks, see **4.3 Memory Bank Select Register (BANK)**.

27.2 Internal Expansion RAM Size Switching Register

Select the internal expansion RAM capacity using the internal expansion RAM size switching register (IXS).
IXS is set by an 8-bit memory manipulation instruction.
Reset signal generation sets IXS to 0CH.

Caution Be sure to set each product to the values shown in Table 27-2 after a reset release.

Figure 27-2. Format of Internal Expansion RAM Size Switching Register (IXS)

Address: FFF4H After reset: 0CH R/W

Symbol	7	6	5	4	3	2	1	0
IXS	0	0	0	0	IXRAM3	IXRAM2	IXRAM1	IXRAM0

IXRAM3	IXRAM2	IXRAM1	IXRAM0	Internal expansion RAM capacity selection
1	1	0	0	0 bytes
1	0	1	0	1024 bytes
1	0	0	0	2048 bytes
0	1	0	0	4096 bytes
0	0	0	0	6144 bytes
Other than above				Setting prohibited

Caution To set memory size, set IMS and then IXS. Set memory size so that the internal ROM area and internal expansion RAM area do not overlap.

Table 27-2. Internal Expansion RAM Size Switching Register Settings

48-pin products of 78K0/KC2	78K0/KD2	78K0/KE2	78K0/KF2	IXS Setting
μPD78F0511, 78F0511A	μPD78F0521, 78F0521A	μPD78F0531, 78F0531A	–	0CH
μPD78F0512, 78F0512A	μPD78F0522, 78F0522A	μPD78F0532, 78F0532A	–	0CH
μPD78F0513, 78F0513A	μPD78F0523, 78F0523A	μPD78F0533, 78F0533A	–	0CH
μPD78F0514, 78F0514A	μPD78F0524, 78F0524A	μPD78F0534, 78F0534A	μPD78F0544, 78F0544A	0AH
μPD78F0515, 78F0515A, 78F0515D[Note], 78F0515DA[Note]	μPD78F0525, 78F0525A	μPD78F0535, 78F0535A	μPD78F0545, 78F0545A	08H
–	μPD78F0526, 78F0526A	μPD78F0536, 78F0536A	μPD78F0546, 78F0546A	04H
–	μPD78F0527, 78F0527A, 78F0527D[Note], 78F0527DA[Note]	μPD78F0537, 78F0537A, 78F0537D[Note], 78F0537DA[Note]	μPD78F0547, 78F0547A, 78F0547D[Note], 78F0547DA[Note]	00H

Note The internal expansion RAM capacity of the products with the on-chip debug function can be debugged according to the debug target products. Set IXS according to the debug target products.

27.3 Writing with Flash Memory Programmer

Data can be written to the flash memory on-board or off-board, by using a dedicated flash memory programmer.

(1) On-board programming

The contents of the flash memory can be rewritten after the 78K0/Kx2 microcontrollers have been mounted on the target system. The connectors that connect the dedicated flash memory programmer must be mounted on the target system.

(2) Off-board programming

Data can be written to the flash memory with a dedicated program adapter (FA series) before the 78K0/Kx2 microcontrollers are mounted on the target system.

Remark The FA series is a product of Naito Densei Machida Mfg. Co., Ltd.

27.4 Programming Environment

The environment required for writing a program to the flash memory of the 78K0/Kx2 microcontrollers are illustrated below.

Figure 27-3. Environment for Writing Program to Flash Memory

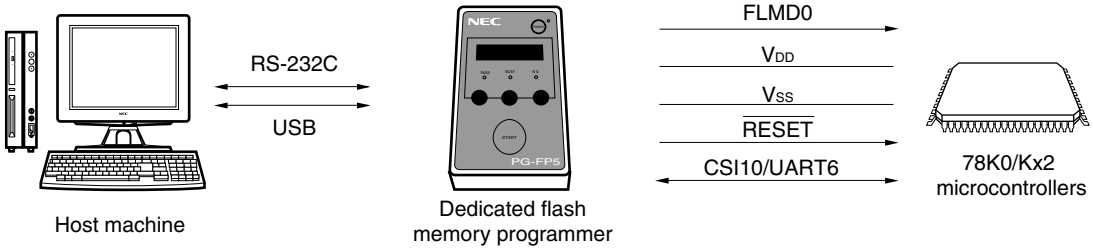

A host machine that controls the dedicated flash memory programmer is necessary.

To interface between the dedicated flash memory programmer and the 78K0/Kx2 microcontrollers, CSI10 or UART6 is used for manipulation such as writing and erasing. To write the flash memory off-board, a dedicated program adapter (FA series) is necessary.

27.5 Communication Mode

Communication between the dedicated flash memory programmer and the 78K0/Kx2 microcontrollers is established by serial communication via CSI10 or UART6 of the 78K0/Kx2 microcontrollers.

(1) CSI10

Transfer rate: 2.4 kHz to 2.5 MHz

Figure 27-4. Communication with Dedicated Flash memory programmer (CSI10)

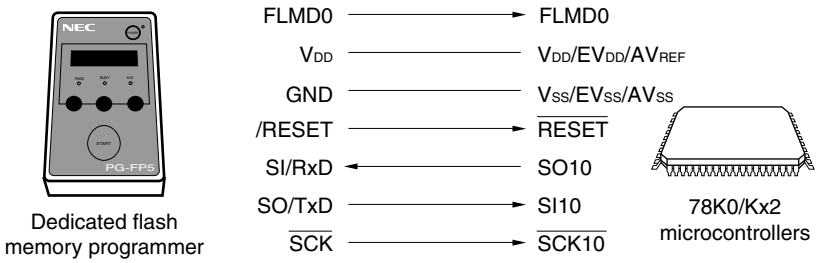

(2) UART6

Transfer rate: 115200 bps

Figure 27-5. Communication with Dedicated Flash memory programmer (UART6)

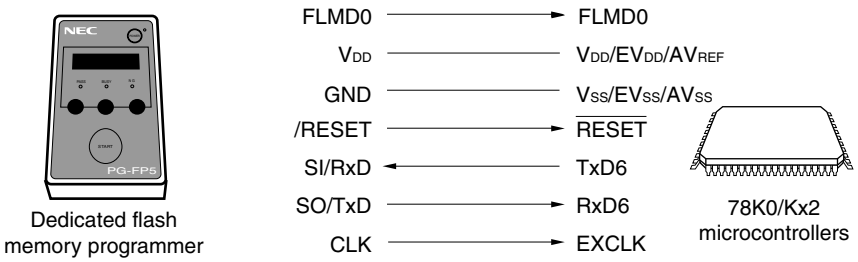

The dedicated flash memory programmer generates the following signals for the 78K0/Kx2 microcontrollers. For details, refer to the user's manual for the PG-FP5, FL-PR5, PG-FP4, or FL-PR4.

Table 27-3. Pin Connection

Dedicated Flash memory programmer			78K0/Kx2 microcontrollers	Connection	
Signal Name	I/O	Pin Function	Pin Name	CSI10	UART6
FLMD0	Output	Mode signal	FLMD0	◎	◎
V_{DD}	I/O	V_{DD} voltage generation/power monitoring	V_{DD}, EV_{DD}, AV_{REF}	◎	◎
GND	–	Ground	V_{SS}, EV_{SS}, AV_{SS}	◎	◎
CLK	Output	Clock output to 78K0/Kx2 microcontrollers	EXCLK/X2/P122	×Note 1	○Note 2
/RESET	Output	Reset signal	$\overline{\text{RESET}}$	◎	◎
SI/RxD	Input	Receive signal	SO10/TxD6	◎	◎
SO/TxD	Output	Transmit signal	SI10/RxD6	◎	◎
SCK	Output	Transfer clock	$\overline{\text{SCK10}}$	◎	×

Notes 1. Only the internal high-speed oscillation clock (f_{RH}) can be used when CSI10 is used.

2. Only the X1 clock (f_X) or external main system clock (f_{EXCLK}) can be used when UART6 is used.

Remark ◎: Be sure to connect the pin.

○: The pin does not have to be connected if the signal is generated on the target board.

×: The pin does not have to be connected.

For the pins not to be used when the dedicated program adapter (FA series) is used, perform the processing described under the recommended connection of unused pins shown in **Table 2-3 Pin I/O Circuit Types**, or those described in **Table 27-4 Processing of Unused Pins When the Flash Memory Write Adapter Is Connected (Required)**.

Table 27-4. Processing of Unused Pins When the Flash Memory Write Adapter Is Connected (Required)

Pin name	Pin processing
P00, P01	Independently connect to EV_{SS} via a resistor.[Notes 1, 5]
P03 to P06	Independently connect to EV_{SS} via a resistor.[Notes 2, 5]
P10, P11	Independently connect to EV_{SS} via a resistor.[Notes 3, 5]
P14	Independently connect to EV_{SS} via a resistor.[Notes 4, 5]
P16, P17	Independently connect to EV_{SS} via a resistor.[Notes 1, 5]
P30 to P33	
P60 to P63	Independently connect to EV_{SS} via a resistor, or connect directly to EV_{SS}.[Note 5]
P70 to P77	Independently connect to EV_{SS} via a resistor.[Notes 1, 5]
P120	
P140 to P143	

Notes 1. These pins may be directly connected to EV_{SS}, without using a resistor, when design is performed so that operation is not switched to the normal operation mode on the flash memory write adapter board during flash memory programming.

2. These pins may be left open with the μPD78F053n and 78F053nA (n = 1 to 3) of the 78K0/KE2 as well as the 78K0/KD2.

3. Connect these pins with the programmer when communicating with the dedicated flash memory programmer via serial communication by CSI10.

4. Connect this pin with the programmer when communicating with the dedicated flash memory programmer via serial communication by UART6.

5. With products without an EV_{SS} pin, connect them to V_{SS}. With products without an EV_{DD} pin, connect them to V_{DD}.

27.6 Connection of Pins on Board

To write the flash memory on-board, connectors that connect the dedicated flash memory programmer must be provided on the target system. First provide a function that selects the normal operation mode or flash memory programming mode on the board.

When the flash memory programming mode is set, all the pins not used for programming the flash memory are in the same status as immediately after reset. Therefore, if the external device does not recognize the state immediately after reset, the pins must be handled as described below.

27.6.1 FLMD0 pin

In the normal operation mode, 0 V is input to the FLMD0 pin. In the flash memory programming mode, the V_{DD} write voltage is supplied to the FLMD0 pin. An FLMD0 pin connection example is shown below.

Figure 27-6. FLMD0 Pin Connection Example

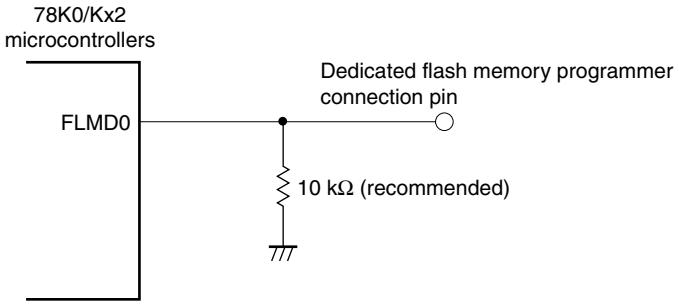

27.6.2 Serial interface pins

The pins used by each serial interface are listed below.

Table 27-5. Pins Used by Each Serial Interface

Serial Interface	Pins Used
CSI10	SO10, SI10, $\overline{SCK10}$
UART6	TxD6, RxD6

To connect the dedicated flash memory programmer to the pins of a serial interface that is connected to another device on the board, care must be exercised so that signals do not collide or that the other device does not malfunction.

(1) Signal collision

If the dedicated flash memory programmer (output) is connected to a pin (input) of a serial interface connected to another device (output), signal collision takes place. To avoid this collision, either isolate the connection with the other device, or make the other device go into an output high-impedance state.

Figure 27-7. Signal Collision (Input Pin of Serial Interface)

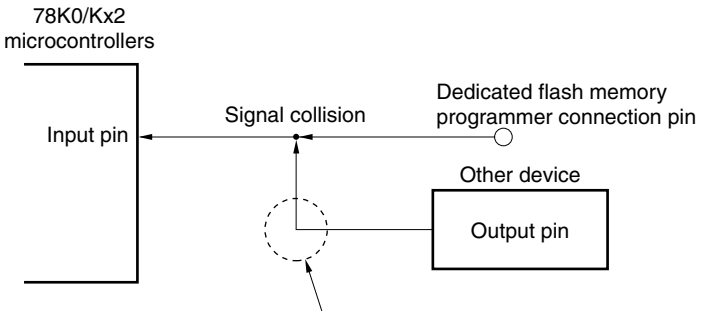

In the flash memory programming mode, the signal output by the device collides with the signal sent from the dedicated flash programmer. Therefore, isolate the signal of the other device.

(2) Malfunction of other device

If the dedicated flash memory programmer (output or input) is connected to a pin (input or output) of a serial interface connected to another device (input), a signal may be output to the other device, causing the device to malfunction. To avoid this malfunction, isolate the connection with the other device.

Figure 27-8. Malfunction of Other Device

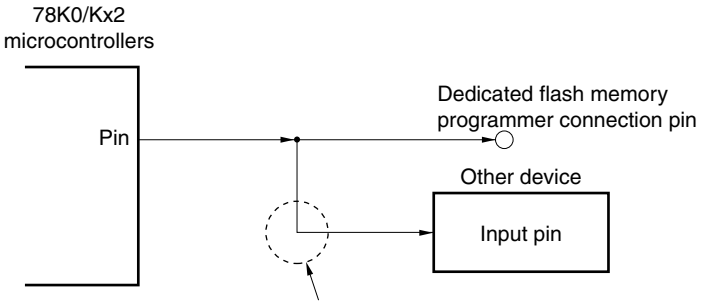

If the signal output by the 78K0/Kx2 microcontrollers in the flash memory programming mode affects the other device, isolate the signal of the other device.

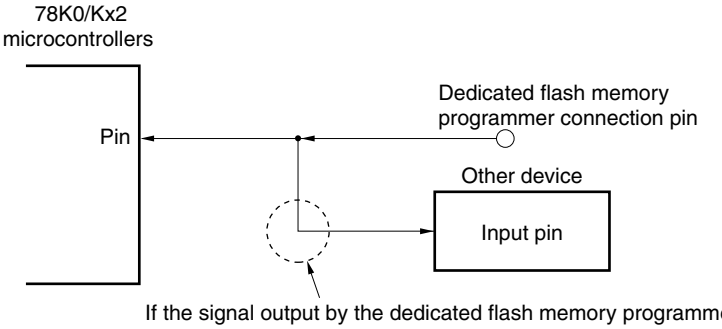

If the signal output by the dedicated flash memory programmer in the flash memory programming mode affects the other device, isolate the signal of the other device.

27.6.3 $\overline{\text{RESET}}$ pin

If the reset signal of the dedicated flash memory programmer is connected to the $\overline{\text{RESET}}$ pin that is connected to the reset signal generator on the board, signal collision takes place. To prevent this collision, isolate the connection with the reset signal generator.

If the reset signal is input from the user system while the flash memory programming mode is set, the flash memory will not be correctly programmed. Do not input any signal other than the reset signal of the dedicated flash memory programmer.

Figure 27-9. Signal Collision ($\overline{\text{RESET}}$ Pin)

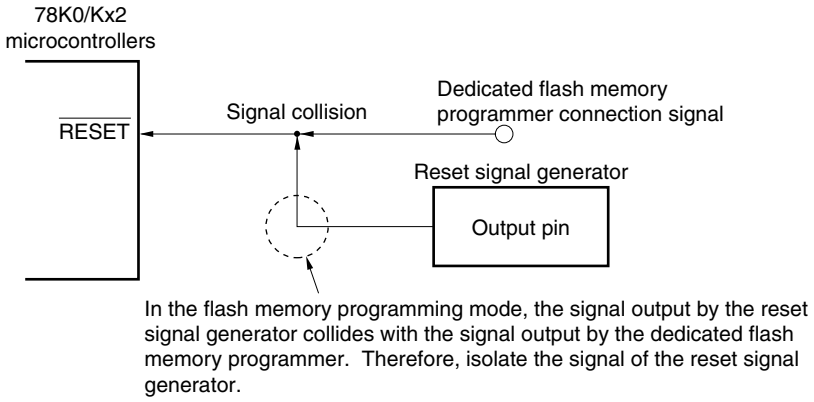

27.6.4 Port pins

When the flash memory programming mode is set, all the pins not used for flash memory programming enter the same status as that immediately after reset. If external devices connected to the ports do not recognize the port status immediately after reset, the port pin must be connected to EV_{DD}[Note] or EV_{SS}[Note] via a resistor.

Note With products without an EV_{SS} pin, connect them to V_{SS}. With products without an EV_{DD} pin, connect them to V_{DD}.

<R> 27.6.5 REGC pin

Connect the REGC pin to V_{SS} via a capacitor (0.47 to 1 μF) in the same manner as during normal operation.

27.6.6 Other signal pins

Connect X1 and X2 in the same status as in the normal operation mode when using the on-board clock.

To input the operating clock from the dedicated flash memory programmer, however, connect CLK of the programmer to EXCLK/X2/P122.

Cautions 1. Only the internal high-speed oscillation clock (f_{RH}) can be used when CSI10 is used.

2. Only the X1 clock (f_X) or external main system clock (f_{EXCLK}) can be used when UART6 is used.

3. For the product with an on-chip debug function (μPD78F05xxD and 78F05xxDA), connect P31/INTP2/OCD1A and P121/X1/OCD0A as follows when writing the flash memory with a flash memory programmer.

- **P31/INTP2/OCD1A: Connect to EV_{SS}[Note] via a resistor.**
- **P121/X1/OCD0A: Connect to V_{SS}[Note] via a resistor.**

Note With products without an EV_{SS} pin, connect them to V_{SS}.

27.6.7 Power supply

To use the supply voltage output of the flash memory programmer, connect the V_{DD} pin to V_{DD} of the flash memory programmer, and the V_{SS} pin to GND of the flash memory programmer.

To use the on-board supply voltage, connect in compliance with the normal operation mode.

However, be sure to connect the V_{DD} and V_{SS} pins to V_{DD} and GND of the flash memory programmer to use the power monitor function with the flash memory programmer, even when using the on-board supply voltage.

Supply the same other power supplies (EV_{DD}, EV_{SS}, AV_{REF}, and AV_{SS}) as those in the normal operation mode.

27.7 Programming Method

27.7.1 Controlling flash memory

The following figure illustrates the procedure to manipulate the flash memory.

Figure 27-10. Flash Memory Manipulation Procedure

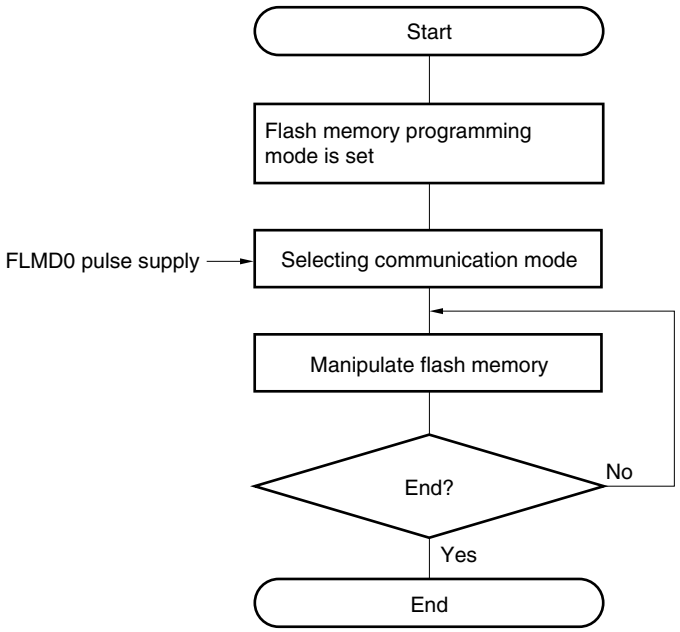

27.7.2 Flash memory programming mode

To rewrite the contents of the flash memory by using the dedicated flash memory programmer, set the 78K0/Kx2 microcontrollers in the flash memory programming mode. To set the mode, set the FLMD0 pin to V_{DD} and clear the reset signal.

Change the mode by using a jumper when writing the flash memory on-board.

Figure 27-11. Flash Memory Programming Mode

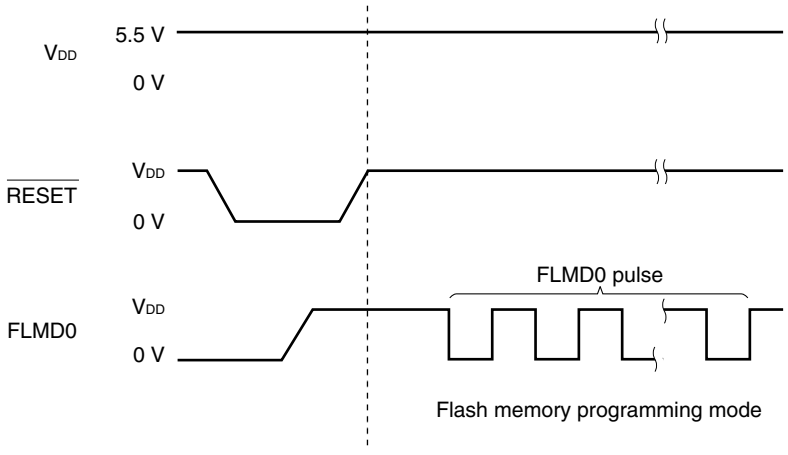

Table 27-6. Relationship Between FLMD0 Pin and Operation Mode After Reset Release

FLMD0	Operation Mode
0	Normal operation mode
V_{DD}	Flash memory programming mode

27.7.3 Selecting communication mode

In the 78K0/Kx2 microcontrollers, a communication mode is selected by inputting pulses to the FLMD0 pin after the dedicated flash memory programming mode is entered. These FLMD0 pulses are generated by the flash memory programmer.

The following table shows the relationship between the number of pulses and communication modes.

Table 27-7. Communication Modes

Communication Mode	Standard Setting[Note 1]				Pins Used	Peripheral Clock	Number of FLMD0 Pulses
	Port	Speed	Frequency	Multiply Rate			
UART (UART6)	UART-Ext-Osc	115,200 bps[Note 3]	2 to 20 MHz[Note 2]	1.0	TxD6, RxD6	f_X	0
	UART-Ext-FP5CK					f_{EXCLK}	3
3-wire serial I/O (CSI10)	CSI-Internal-OSC	2.4 kHz to 2.5 MHz	–		SO10, SI10, $\overline{SCK10}$	f_{RH}	8

Notes 1. Selection items for Standard settings on GUI of the flash memory programmer.

2. The possible setting range differs depending on the voltage. For details, refer to the chapter of electrical specifications.

3. Because factors other than the baud rate error, such as the signal waveform slew, also affect UART communication, thoroughly evaluate the slew as well as the baud rate error.

Caution When UART6 is selected, the receive clock is calculated based on the reset command sent from the dedicated flash memory programmer after the FLMD0 pulse has been received.

Remark f_X: X1 clock
f_{EXCLK}: External main system clock
f_{RH}: Internal high-speed oscillation clock

27.7.4 Communication commands

The 78K0/Kx2 microcontrollers communicate with the dedicated flash memory programmer by using commands. The signals sent from the flash memory programmer to the 78K0/Kx2 microcontrollers are called commands, and the signals sent from the 78K0/Kx2 microcontrollers to the dedicated flash memory programmer are called response.

Figure 27-12. Communication Commands

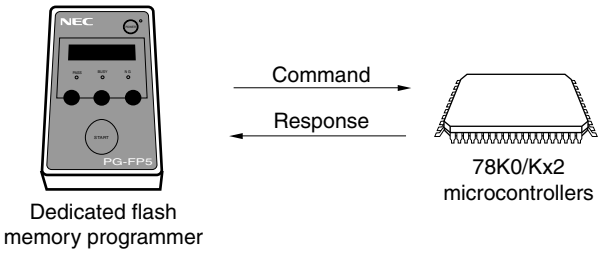

The flash memory control commands of the 78K0/Kx2 microcontrollers are listed in the table below. All these commands are issued from the programmer and the 78K0/Kx2 microcontrollers perform processing corresponding to the respective commands.

Table 27-8. Flash Memory Control Commands

Classification	Command Name	Function
Verify	Verify	Compares the contents of a specified area of the flash memory with data transmitted from the programmer.
Erase	Chip Erase	Erases the entire flash memory.
	Block Erase	Erases a specified area in the flash memory.
Blank check	Block Blank Check	Checks if a specified block in the flash memory has been correctly erased.
Write	Programming	Writes data to a specified area in the flash memory.
Getting information	Status	Gets the current operating status (status data).
	Silicon Signature	Gets 78K0/Kx2 information (such as the part number and flash memory configuration).
	Version Get	Gets the 78K0/Kx2 version and firmware version.
	Checksum	Gets the checksum data for a specified area.
Security	Security Set	Sets security information.
Others	Reset	Used to detect synchronization status of communication.
	Oscillating Frequency Set	Specifies an oscillation frequency.

The 78K0/Kx2 microcontrollers return a response for the command issued by the dedicated flash memory programmer. The response names sent from the 78K0/Kx2 microcontrollers are listed below.

Table 27-9. Response Names

Response Name	Function
ACK	Acknowledges command/data.
NAK	Acknowledges illegal command/data.

27.8 Security Settings

The 78K0/Kx2 microcontrollers support a security function that prohibits rewriting the user program written to the internal flash memory, so that the program cannot be changed by an unauthorized person.

The operations shown below can be performed using the Security Set command. The security setting is valid when the programming mode is set next.

- Disabling batch erase (chip erase)
  Execution of the block erase and batch erase (chip erase) commands for entire blocks in the flash memory is prohibited by this setting during on-board/off-board programming. Once execution of the batch erase (chip erase) command is prohibited, all of the prohibition settings (including prohibition of batch erase (chip erase)) can no longer be cancelled.

  Caution After the security setting for the batch erase is set, erasure cannot be performed for the device. In addition, even if a write command is executed, data different from that which has already been written to the flash memory cannot be written, because the erase command is disabled.

- Disabling block erase
  Execution of the block erase command for a specific block in the flash memory is prohibited during on-board/off-board programming. However, blocks can be erased by means of self programming.

- Disabling write
  Execution of the write and block erase commands for entire blocks in the flash memory is prohibited during on-board/off-board programming. However, blocks can be written by means of self programming.

- Disabling rewriting boot cluster 0
  Execution of the block erase command and write command on boot cluster 0 (0000H to 0FFFH) in the flash memory is prohibited by this setting. Execution of the batch erase (chip erase) command is also prohibited by this setting.

  Caution If a security setting that rewrites boot cluster 0 has been applied, the rewriting of boot cluster 0 and the batch erase (chip erase) will not be executed for the device.

The batch erase (chip erase), block erase, write commands, and rewriting boot cluster 0 are enabled by the default setting when the flash memory is shipped. Security can be set by on-board/off-board programming and self programming. Each security setting can be used in combination.

Prohibition of erasing blocks and writing is cleared by executing the batch erase (chip erase) command.

Table 27-10 shows the relationship between the erase and write commands when the 78K0/Kx2 microcontroller security function is enabled.

Table 27-10. Relationship Between Enabling Security Function and Command

(1) During on-board/off-board programming

Valid Security	Executed Command		
	Batch Erase (Chip Erase)	Block Erase	Write
Prohibition of batch erase (chip erase)	Cannot be erased in batch	Blocks cannot be erased.	Can be performed[Note].
Prohibition of block erase	Can be erased in batch.		Can be performed.
Prohibition of writing			Cannot be performed.
Prohibition of rewriting boot cluster 0	Cannot be erased in batch	Boot cluster 0 cannot be erased.	Boot cluster 0 cannot be written.

Note Confirm that no data has been written to the write area. Because data cannot be erased after batch erase (chip erase) is prohibited, do not write data if the data has not been erased.

(2) During self programming

Valid Security	Executed Command	
	Block Erase	Write
Prohibition of batch erase (chip erase)	Blocks can be erased.	Can be performed.
Prohibition of block erase		
Prohibition of writing		
Prohibition of rewriting boot cluster 0	Boot cluster 0 cannot be erased.	Boot cluster 0 cannot be written.

Table 27-11 shows how to perform security settings in each programming mode.

Table 27-11. Setting Security in Each Programming Mode

(1) On-board/off-board programming

Security	Security Setting	How to Disable Security Setting
Prohibition of batch erase (chip erase)	Set via GUI of dedicated flash memory programmer, etc.	Cannot be disabled after set.
Prohibition of block erase		Execute batch erase (chip erase) command
Prohibition of writing		
Prohibition of rewriting boot cluster 0		Cannot be disabled after set.

(2) Self programming

Security	Security Setting	How to Disable Security Setting
Prohibition of batch erase (chip erase)	Set by using information library.	Cannot be disabled after set.
Prohibition of block erase		Execute batch erase (chip erase) command during on-board/off-board programming (cannot be disabled during self programming)
Prohibition of writing		
Prohibition of rewriting boot cluster 0		Cannot be disabled after set.

27.9 Processing Time for Each Command When PG-FP4 or PG-FP5 Is Used (Reference)

The following table shows the processing time for each command (reference) when the PG-FP4 or PG-FP5 is used as a dedicated flash memory programmer.

Table 27-12. Processing Time for Each Command When PG-FP4 or PG-FP5 Is Used (Reference) (1/2)

(1) Products with internal ROMs of the 32 KB

Command of PG-FP4	Port: CSI-Internal-OSC (Internal high-speed oscillation clock (f_{RH})), Speed: 2.5 MHz	Port: UART-Ext-FP4CK (External main system clock (f_{EXCLK})), Speed: 115,200 bps	
		Frequency: 2.0 MHz	Frequency: 20 MHz
Signature	0.5 s (TYP.)	0.5 s (TYP.)	0.5 s (TYP.)
Blankcheck	0.5 s (TYP.)	0.5 s (TYP.)	0.5 s (TYP.)
Erase	0.5 s (TYP.)	0.5 s (TYP.)	0.5 s (TYP.)
Program	2.5 s (TYP.)	5 s (TYP.)	5 s (TYP.)
Verify	1.5 s (TYP.)	4 s (TYP.)	3.5 s (TYP.)
E.P.V	3.5 s (TYP.)	6 s (TYP.)	6 s (TYP.)
Checksum	0.5 s (TYP.)	0.5 s (TYP.)	0.5 s (TYP.)
Security	0.5 s (TYP.)	0.5 s (TYP.)	0.5 s (TYP.)

(2) Products with internal ROMs of the 60 KB

Command of PG-FP4	Port: CSI-Internal-OSC (Internal high-speed oscillation clock (f_{RH})), Speed: 2.5 MHz	Port: UART-Ext-FP4CK (External main system clock (f_{EXCLK})), Speed: 115,200 bps	
		Frequency: 2.0 MHz	Frequency: 20 MHz
Signature	0.5 s (TYP.)	0.5 s (TYP.)	0.5 s (TYP.)
Blankcheck	1 s (TYP.)	1 s (TYP.)	1 s (TYP.)
Erase	1 s (TYP.)	1 s (TYP.)	1 s (TYP.)
Program	5 s (TYP.)	9 s (TYP.)	9 s (TYP.)
Verify	2 s (TYP.)	6.5 s (TYP.)	6.5 s (TYP.)
E.P.V	6 s (TYP.)	10.5 s (TYP.)	10.5 s (TYP.)
Checksum	0.5 s (TYP.)	1 s (TYP.)	1 s (TYP.)
Security	0.5 s (TYP.)	0.5 s (TYP.)	0.5 s (TYP.)

Caution When executing boot swapping, do not use the E.P.V. command with the dedicated flash memory programmer.

Table 27-12. Processing Time for Each Command When PG-FP4 or PG-FP5 Is Used (Reference) (2/2)

(3) Products with internal ROMs of the 128 KB

Command of PG-FP4	Port: CSI-Internal-OSC (Internal high-speed oscillation clock (f_{RH})), Speed: 2.5 MHz	Port: UART-Ext-FP4CK (External main system clock (f_{EXCLK})), Speed: 115,200 bps	
		Frequency: 2.0 MHz	Frequency: 20 MHz
Signature	0.5 s (TYP.)	0.5 s (TYP.)	0.5 s (TYP.)
Blankcheck	1 s (TYP.)	1 s (TYP.)	1 s (TYP.)
Erase	1.5 s (TYP.)	1.5 s (TYP.)	1.5 s (TYP.)
Program	9.5 s (TYP.)	18 s (TYP.)	18 s (TYP.)
Verify	4.5 s (TYP.)	13.5 s (TYP.)	13.5 s (TYP.)
E.P.V	11 s (TYP.)	19.5 s (TYP.)	19.5 s (TYP.)
Checksum	1 s (TYP.)	1 s (TYP.)	1 s (TYP.)
Security	0.5 s (TYP.)	0.5 s (TYP.)	0.5 s (TYP.)

Caution When executing boot swapping, do not use the E.P.V. command with the dedicated flash memory programmer.

27.10 Flash Memory Programming by Self-Programming

The 78K0/Kx2 microcontrollers support a self-programming function that can be used to rewrite the flash memory via a user program. Because this function allows a user application to rewrite the flash memory by using a self-programming library, it can be used to upgrade the program in the field.

If an interrupt occurs during self-programming, self-programming can be temporarily stopped and interrupt servicing can be executed. To execute interrupt servicing, restore the normal operation mode after self-programming has been stopped, and execute the EI instruction. After the self-programming mode is later restored, self-programming can be resumed.

Remark For details of the self-programming function and the self-programming library, refer to **78K0 Microcontrollers Self Programming Library Type01 User's Manual (U18274E)**.

Cautions 1. The self-programming function cannot be used when the CPU operates with the subsystem clock.

2. Oscillation of the internal high-speed oscillator is started during self programming, regardless of the setting of the RSTOP flag (bit 0 of the internal oscillation mode register (RCM)). Oscillation of the internal high-speed oscillator cannot be stopped even if the STOP instruction is executed.

3. Input a high level to the FLMD0 pin during self-programming.

4. Be sure to execute the DI instruction before starting self-programming.
The self-programming function checks the interrupt request flags (IF0L, IF0H, IF1L, and IF1H). If an interrupt request is generated, self-programming is stopped.

5. Self-programming is also stopped by an interrupt request that is not masked even in the DI status. To prevent this, mask the interrupt by using the interrupt mask flag registers (MK0L, MK0H, MK1L, and MK1H).

Caution 6. Allocate the entry program for self-programming in the common area of 0000H to 7FFFH.

Figure 27-13. Operation Mode and Memory Map for Self-Programming (μPD78F0547 and 78F0547A)

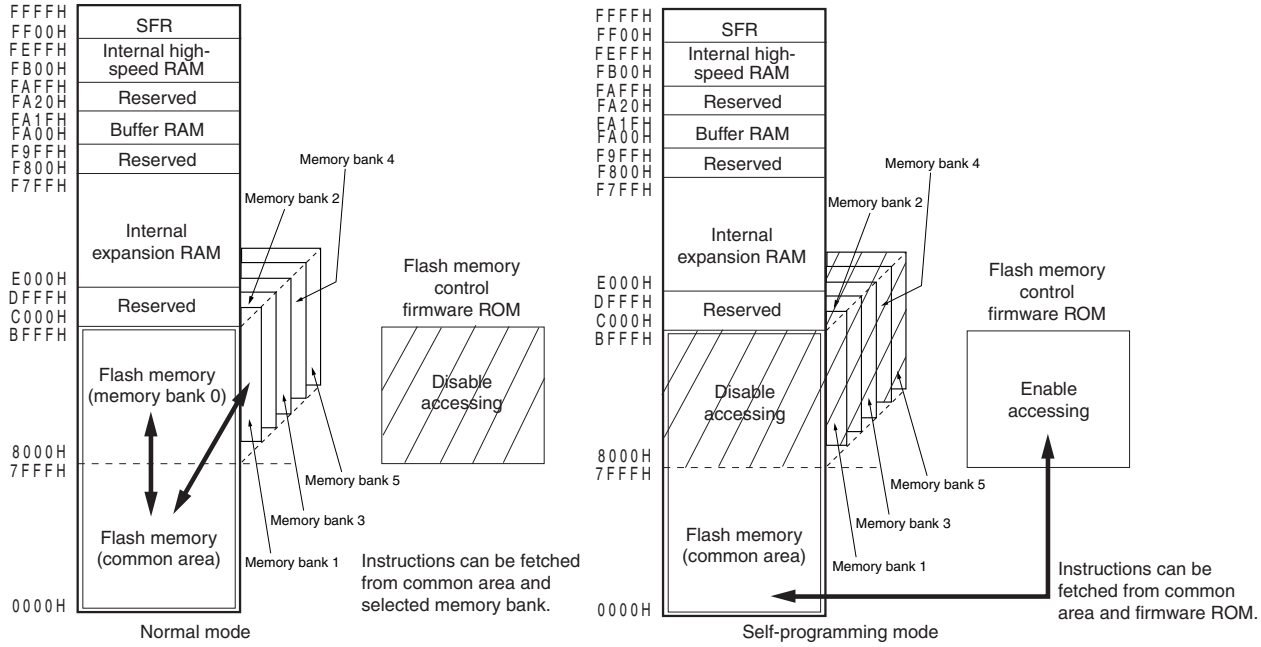

The following figure illustrates a flow of rewriting the flash memory by using a self-programming library.

Figure 27-14. Flow of Self Programming (Rewriting Flash Memory)

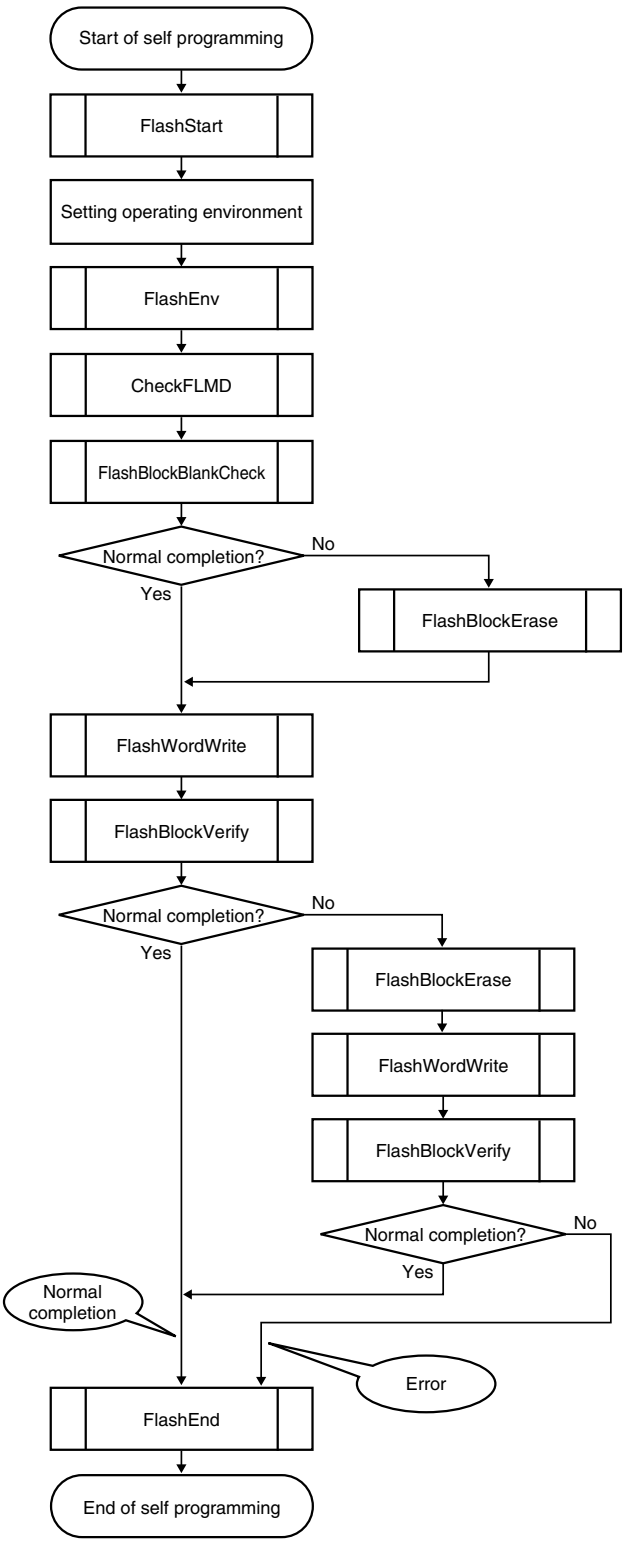

Remark For details of the self-programming library, refer to **78K0 Microcontrollers Self Programming Library Type01 User's Manual (U18274E)**.

The following table shows the processing time and interrupt response time for the self-programming library.

Table 27-13. Processing Time for Self Programming Library
(Conventional-specification Products (μPD78F05xx and 78F05xxD)) (1/4)

(1) When internal high-speed oscillation clock is used and entry RAM is located outside short direct addressing range

Library Name		Processing Time (μs)			
		Normal Model of C Compiler		Static Model of C Compiler/Assembler	
		Min.	Max.	Min.	Max.
Self programming start library		4.25			
Initialize library		977.75			
Mode check library		753.875		753.125	
Block blank check library		12770.875		12765.875	
Block erase library		36909.5	356318	36904.5	356296.25
Word write library		1214 (1214.375)	2409 (2409.375)	1207 (1207.375)	2402 (2402.375)
Block verify library		25618.875		25613.875	
Self programming end library		4.25			
Get information library	Option value: 03H	871.25 (871.375)		866 (866.125)	
	Option value: 04H	863.375 (863.5)		858.125 (858.25)	
	Option value: 05H	1024.75 (1043.625)		1037.5 (1038.375)	
Set information library		105524.75	790809.375	105523.75	790808.375
EEPROM write library		1496.5 (1496.875)	2691.5 (2691.875)	1489.5 (1489.875)	2684.5 (2684.875)

Remarks 1. Values in parentheses indicate values when a write start address structure is located other than in the internal high-speed RAM.

2. The above processing times are those during stabilized operation of the internal high-speed oscillator (RSTS = 1).

3. RSTS: Bit 7 of the internal oscillation mode register (RCM)

Table 27-13. Processing Time for Self Programming Library
(Conventional-specification Products (μPD78F05xx and 78F05xxD)) (2/4)

(2) When internal high-speed oscillation clock is used and entry RAM is located in short direct addressing range

Library Name		Processing Time (μs)			
		Normal Model of C Compiler		Static Model of C Compiler/Assembler	
		Min.	Max.	Min.	Max.
Self programming start library		4.25			
Initialize library		443.5			
Mode check library		219.625		218.875	
Block blank check library		12236.625		12231.625	
Block erase library		36363.25	355771.75	36358.25	355750
Word write library		679.75 (680.125)	1874.75 (1875.125)	672.75 (673.125)	1867.75 (1868.125)
Block verify library		25072.625		25067.625	
Self programming end library		4.25			
Get information library	Option value: 03H	337 (337.125)		331.75 (331.875)	
	Option value: 04H	329.125 (239.25)		323.875 (324)	
	Option value: 05H	502.25 (503.125)		497 (497.875)	
Set information library		104978.5	541143.125	104977.5	541142.125
EEPROM write library		962.25 (962.625)	2157.25 (2157.625)	955.25 (955.625)	2150.25 (2150.625)

Remarks 1. Values in parentheses indicate values when a write start address structure is located other than in the internal high-speed RAM.

2. The above processing times are those during stabilized operation of the internal high-speed oscillator (RSTS = 1).

3. RSTS: Bit 7 of the internal oscillation mode register (RCM)

Table 27-13. Processing Time for Self Programming Library (Conventional-specification Products (μPD78F05xx and 78F05xxD)) (3/4)

(3) When high-speed system clock (X1 oscillation or external clock input) is used and entry RAM is located outside short direct addressing range

Library Name		Processing Time (μs)			
		Normal Model of C Compiler		Static Model of C Compiler/Assembler	
		Min.	Max.	Min.	Max.
Self programming start library		34/f_{CPU}			
Initialize library		49/f_{CPU} + 485.8125			
Mode check library		35/f_{CPU} + 374.75		29/f_{CPU} + 374.75	
Block blank check library		174/f_{CPU} + 6382.0625		134/f_{CPU} + 6382.0625	
Block erase library		174/f_{CPU} + 31093.875	174/f_{CPU} + 298948.125	134/f_{CPU} + 31093.875	134/f_{CPU} + 298948.125
Word write library		318 (321)/f_{CPU} + 644.125	318 (321)/f_{CPU} + 1491.625	262 (265)/f_{CPU} + 644.125	262 (265)/f_{CPU} + 1491.625
Block verify library		174/f_{CPU} + 13448.5625		134/f_{CPU} + 13448.5625	
Self programming end library		34/f_{CPU}			
Get information library	Option value: 03H	171 (172)/f_{CPU} + 432.4375		129 (130)/f_{CPU} + 432.4375	
	Option value: 04H	181 (182)/f_{CPU} + 427.875		139 (140)/f_{CPU} + 427.875	
	Option value: 05H	404 (411)/f_{CPU} + 496.125		362 (369)/f_{CPU} + 496.125	
Set information library		75/f_{CPU} + 79157.6875	75/f_{CPU} + 652400	67f_{CPU} + 79157.6875	67f_{CPU} + 652400
EEPROM write library		318 (321)/f_{CPU} + 799.875	318 (321)/f_{CPU} + 1647.375	262 (265)/f_{CPU} + 799.875	262 (265)/f_{CPU} + 1647.375

Remarks 1. Values in parentheses indicate values when a write start address structure is located other than in the internal high-speed RAM.

2. The above processing times are those during stabilized operation of the internal high-speed oscillator (RSTS = 1).

3. f_{CPU}: CPU operation clock frequency

4. RSTS: Bit 7 of the internal oscillation mode register (RCM)

Table 27-13. Processing Time for Self Programming Library (Conventional-specification Products (μPD78F05xx and 78F05xxD)) (4/4)

(4) When high-speed system clock (X1 oscillation or external clock input) is used and entry RAM is located in short direct addressing range

Library Name		Processing Time (μs)			
		Normal Model of C Compiler		Static Model of C Compiler/Assembler	
		Min.	Max.	Min.	Max.
Self programming start library		34/f_{CPU}			
Initialize library		49/f_{CPU} + 224.6875			
Mode check library		35/f_{CPU} + 113.625		29/f_{CPU} + 113.625	
Block blank check library		174/f_{CPU} + 6120.9375		134/f_{CPU} + 6120.9375	
Block erase library		174/f_{CPU} + 30820.75	174/f_{CPU} + 298675	134/f_{CPU} + 30820.75	134/f_{CPU} + 298675
Word write library		318 (321)/f_{CPU} + 383	318 (321)/f_{CPU} + 1230.5	262 (265)/f_{CPU} + 383	262 (265)/f_{CPU} + 1230.5
Block verify library		174/f_{CPU} + 13175.4375		134/f_{CPU} + 13175.4375	
Self programming end library		34/f_{CPU}			
Get information library	Option value: 03H	171 (172)/f_{CPU} + 171.3125		129 (130)/f_{CPU} + 171.3125	
	Option value: 04H	181 (182)/f_{CPU} + 166.75		139 (140)/f_{CPU} + 166.75	
	Option value: 05H	404 (411)/f_{CPU} + 231.875		362 (369)/f_{CPU} + 231.875	
Set information library		75/f_{CPU} + 78884.5625	75/f_{CPU} + 527566.875	67f_{CPU} + 78884.5625	67f_{CPU} + 527566.875
EEPROM write library		318 (321)/f_{CPU} + 538.75	318 (321)/f_{CPU} + 1386.25	262 (265)/f_{CPU} + 538.75	262 (265)/f_{CPU} + 1386.25

Remarks 1. Values in parentheses indicate values when a write start address structure is located other than in the internal high-speed RAM.

2. The above processing times are those during stabilized operation of the internal high-speed oscillator (RSTS = 1).

3. f_{CPU}: CPU operation clock frequency

4. RSTS: Bit 7 of the internal oscillation mode register (RCM)

Table 27-14. Processing Time for Self Programming Library
(Expanded-specification Products (μPD78F05xxA and 78F05xxDA)) (1/3)

(1) When internal high-speed oscillation clock is used and entry RAM is located outside short direct addressing range

Library Name		Processing Time (μs)			
		Normal Model of C Compiler		Static Model of C Compiler/Assembler	
		Min.	Max.	Min.	Max.
Self programming start library		4.0	4.5	4.0	4.5
Initialize library		1105.9	1106.6	1105.9	1106.6
Mode check library		905.7	906.1	904.9	905.3
Block blank check library		12776.1	12778.3	12770.9	12772.6
Block erase library		26050.4	349971.3	26045.3	349965.6
Word write library		1180.1 + 203 × w	1184.3 + 2241 × w	1172.9 + 203 × w	1176.3 + 2241 × w
Block verify library		25337.9	25340.2	25332.8	25334.5
Self programming end library		4.0	4.5	4.0	4.5
Get information library	Option value: 03H	1072.9	1075.2	1067.5	1069.1
	Option value: 04H	1060.2	1062.6	1054.8	1056.6
	Option value: 05H	1023.8	1028.2	1018.3	1022.1
Set information library		70265.9	759995.0	70264.9	759994.0
EEPROM write library		1316.8 + 347 × w	1320.9 + 2385 × w	1309.0 + 347 × w	1312.4 + 2385 × w

(2) When internal high-speed oscillation clock is used and entry RAM is located in short direct addressing range

Library Name		Processing Time (μs)			
		Normal Model of C Compiler		Static Model of C Compiler/Assembler	
		Min.	Max.	Min.	Max.
Self programming start library		4.0	4.5	4.0	4.5
Initialize library		449.5	450.2	449.5	450.2
Mode check library		249.3	249.7	248.6	248.9
Block blank check library		12119.7	12121.9	12114.6	12116.3
Block erase library		25344.7	349266.4	25339.6	349260.8
Word write library		445.8 + 203 × w	449.9 + 2241 × w	438.5 + 203 × w	441.9 + 2241 × w
Block verify library		24682.7	24684.9	24677.6	24679.3
Self programming end library		4.0	4.5	4.0	4.5
Get information library	Option value: 03H	417.6	419.8	412.1	413.8
	Option value: 04H	405.0	407.4	399.5	401.3
	Option value: 05H	367.4	371.8	361.9	365.8
Set information library		69569.3	759297.3	69568.3	759296.2
EEPROM write library		795.1 + 347 × w	799.3 + 2385 × w	787.4 + 347 × w	790.8 + 2385 × w

Remarks 1. The above processing times are those when a write start address structure is located in the internal high-speed RAM and during stabilized operation of the internal high-speed oscillator (RSTS = 1).

2. RSTS: Bit 7 of the internal oscillation mode register (RCM)

3. w: Number of words in write data (1 word = 4 bytes)

Table 27-14. Processing Time for Self Programming Library (Expanded-specification Products (μPD78F05xxA and 78F05xxDA)) (2/3)

(3) When high-speed system clock (X1 oscillation or external clock input) is used and entry RAM is located outside short direct addressing range

Library Name		Processing Time (μs)			
		Normal Model of C Compiler		Static Model of C Compiler/Assembler	
		Min.	Max.	Min.	Max.
Self programming start library		34/f_{CPU}			
Initialize library		55/f_{CPU} + 594			
Mode check library		36/f_{CPU} + 495		30/f_{CPU} + 495	
Block blank check library		179/f_{CPU} + 6429		136/f_{CPU} + 6429	
Block erase library		179/f_{CPU} + 19713	179/f_{CPU} + 268079	136/f_{CPU} + 19713	136/f_{CPU} + 268079
Word write library		333/f_{CPU} + 647 + 136 × w	333/f_{CPU} + 647 + 1647 × w	272/f_{CPU} + 647 + 136 × w	272/f_{CPU} + 647 + 1647 × w
Block verify library		179/f_{CPU} + 13284		136/f_{CPU} + 13284	
Self programming end library		34/f_{CPU}			
Get information library	Option value: 03H	180/f_{CPU} + 581		134/f_{CPU} + 581	
	Option value: 04H	190/f_{CPU} + 574		144/f_{CPU} + 574	
	Option value: 05H	350/f_{CPU} + 535		304/f_{CPU} + 535	
Set information library		80/f_{CPU} + 43181	80/f_{CPU} + 572934	72/f_{CPU} + 43181	72/f_{CPU} + 572934
EEPROM write library		333/f_{CPU} + 729 + 209 × w	333/f_{CPU} + 729 + 1722 × w	268/f_{CPU} + 729 + 209 × w	268/f_{CPU} + 729 + 1722 × w

Remarks 1. The above processing times are those when a write start address structure is located in the internal high-speed RAM and during stabilized operation of the internal high-speed oscillator (RSTS = 1).

2. RSTS: Bit 7 of the internal oscillation mode register (RCM)

3. f_{CPU}: CPU operation clock frequency

4. w: Number of words in write data (1 word = 4 bytes)

Table 27-14. Processing Time for Self Programming Library (Expanded-specification Products (μPD78F05xxA and 78F05xxDA)) (3/3)

(4) When high-speed system clock (X1 oscillation or external clock input) is used and entry RAM is located in short direct addressing range

Library Name		Processing Time (μs)			
		Normal Model of C Compiler		Static Model of C Compiler/Assembler	
		Min.	Max.	Min.	Max.
Self programming start library		34/f_{CPU}			
Initialize library		55/f_{CPU} + 272			
Mode check library		36/f_{CPU} + 173		30/f_{CPU} + 173	
Block blank check library		179/f_{CPU} + 6108		136/f_{CPU} + 6108	
Block erase library		179/f_{CPU} + 19371	179/f_{CPU} + 267738	136/f_{CPU} + 19371	136/f_{CPU} + 267738
Word write library		333/f_{CPU} + 247 + 136 × w	333/f_{CPU} + 247 + 1647 × w	272/f_{CPU} + 247 + 136 × w	272/f_{CPU} + 247 + 1647 × w
Block verify library		179/f_{CPU}+12964		136/f_{CPU}+12964	
Self programming end library		34/f_{CPU}			
Get information library	Option value: 03H	180/f_{CPU} + 261		134/f_{CPU} + 261	
	Option value: 04H	190/f_{CPU} + 254		144/f_{CPU} + 254	
	Option value: 05H	350/f_{CPU} + 213		304/f_{CPU} + 213	
Set information library		80/f_{CPU} + 42839	80/f_{CPU} + 572592	72/f_{CPU} + 42839	72/f_{CPU} + 572592
EEPROM write library		333/f_{CPU} + 516 + 209 × w	333/f_{CPU} + 516 + 1722 × w	268/f_{CPU} + 516 + 209 × w	268/f_{CPU} + 516 + 1722 × w

Remarks 1. The above processing times are those when a write start address structure is located in the internal high-speed RAM and during stabilized operation of the internal high-speed oscillator (RSTS = 1).

2. RSTS: Bit 7 of the internal oscillation mode register (RCM)

3. f_{CPU}: CPU operation clock frequency

4. w: Number of words in write data (1 word = 4 bytes)

Table 27-15. Interrupt Response Time for Self Programming Library (Conventional-specification Products (μPD78F05xx and 78F05xxD)) (1/2)

(1) When internal high-speed oscillation clock is used

Library Name	Interrupt Response Time (μs (Max.))			
	Normal Model of C Compiler		Static Model of C Compiler/Assembler	
	Entry RAM location is outside short direct addressing range	Entry RAM location is in short direct addressing range	Entry RAM location is outside short direct addressing range	Entry RAM location is in short direct addressing range
Block blank check library	933.6	668.6	927.9	662.9
Block erase library	1026.6	763.6	1020.9	757.9
Word write library	2505.8	1942.8	2497.8	1934.8
Block verify library	958.6	693.6	952.9	687.9
Set information library	476.5	211.5	475.5	210.5
EEPROM write library	2760.8	2168.8	2759.5	2167.5

Remarks 1. The above interrupt response times are those during stabilized operation of the internal high-speed oscillator (RSTS = 1).

2. RSTS: Bit 7 of the internal oscillation mode register (RCM)

(2) When high-speed system clock is used (normal model of C compiler)

Library Name	Interrupt Response Time (μs (Max.))			
	RSTOP = 0, RSTS = 1		RSTOP = 1	
	Entry RAM location is outside short direct addressing range	Entry RAM location is in short direct addressing range	Entry RAM location is outside short direct addressing range	Entry RAM location is in short direct addressing range
Block blank check library	179/f_{CPU} + 507	179/f_{CPU} + 407	179/f_{CPU} + 1650	179/f_{CPU} + 714
Block erase library	179/f_{CPU} + 559	179/f_{CPU} + 460	179/f_{CPU} + 1702	179/f_{CPU} + 767
Word write library	333/f_{CPU} + 1589	333/f_{CPU} + 1298	333/f_{CPU} + 2732	333/f_{CPU} + 1605
Block verify library	179/f_{CPU} + 518	179/f_{CPU} + 418	179/f_{CPU} + 1661	179/f_{CPU} + 725
Set information library	80/f_{CPU} + 370	80/f_{CPU} + 165	80/f_{CPU} + 1513	80/f_{CPU} + 472
EEPROM write library[Note]	29/f_{CPU} + 1759	29/f_{CPU} + 1468	29/f_{CPU} + 1759	29/f_{CPU} + 1468
	333/f_{CPU} + 834	333/f_{CPU} + 512	333/f_{CPU} + 2061	333/f_{CPU} + 873

Note The longer value of the EEPROM write library interrupt response time becomes the Max. value, depending on the value of f_{CPU}.

Remarks 1. f_{CPU}: CPU operation clock frequency

2. RSTOP: Bit 0 of the internal oscillation mode register (RCM)

3. RSTS: Bit 7 of the internal oscillation mode register (RCM)

Table 27-15. Interrupt Response Time for Self Programming Library (Conventional-specification Products (μPD78F05xx and 78F05xxD)) (2/2)

(3) When high-speed system clock is used (static model of C compiler/assembler)

Library Name	Interrupt Response Time (μs (Max.))			
	RSTOP = 0, RSTS = 1		RSTOP = 1	
	Entry RAM location is outside short direct addressing range	Entry RAM location is in short direct addressing range	Entry RAM location is outside short direct addressing range	Entry RAM location is in short direct addressing range
Block blank check library	136/f_{CPU} + 507	136/f_{CPU} + 407	136/f_{CPU} + 1650	136/f_{CPU} + 714
Block erase library	136/f_{CPU} + 559	136/f_{CPU} + 460	136/f_{CPU} + 1702	136/f_{CPU} + 767
Word write library	272/f_{CPU} + 1589	272/f_{CPU} + 1298	272/f_{CPU} + 2732	272/f_{CPU} + 1605
Block verify library	136/f_{CPU} + 518	136/f_{CPU} + 418	136/f_{CPU} + 1661	136/f_{CPU} + 725
Set information library	72/f_{CPU} + 370	72/f_{CPU} + 165	72/f_{CPU} + 1513	72/f_{CPU} + 472
EEPROM write library[Note]	19/f_{CPU} + 1759	19/f_{CPU} + 1468	19/f_{CPU} + 1759	19/f_{CPU} + 1468
	268/f_{CPU} + 834	268/f_{CPU} + 512	268/f_{CPU} + 2061	268/f_{CPU} + 873

Note The longer value of the EEPROM write library interrupt response time becomes the Max. value, depending on the value of f_{CPU}.

Remarks 1. f_{CPU}: CPU operation clock frequency

2. RSTOP: Bit 0 of the internal oscillation mode register (RCM)

3. RSTS: Bit 7 of the internal oscillation mode register (RCM)

Table 27-16. Interrupt Response Time for Self Programming Library (Expanded-specification Products (μPD78F05xxA and 78F05xxDA)) (1/2)

(1) When internal high-speed oscillation clock is used

Library Name	Interrupt Response Time (μs (Max.))			
	Normal Model of C Compiler		Static Model of C Compiler/Assembler	
	Entry RAM location is outside short direct addressing range	Entry RAM location is in short direct addressing range	Entry RAM location is outside short direct addressing range	Entry RAM location is in short direct addressing range
Block blank check library	1100.9	431.9	1095.3	426.3
Block erase library	1452.9	783.9	1447.3	778.3
Word write library	1247.2	579.2	1239.2	571.2
Block verify library	1125.9	455.9	1120.3	450.3
Set information library	906.9	312.0	905.8	311.0
EEPROM write library	1215.2	547.2	1213.9	545.9

Remarks 1. The above interrupt response times are those during stabilized operation of the internal high-speed oscillator (RSTS = 1).

2. RSTS: Bit 7 of the internal oscillation mode register (RCM)

(2) When high-speed system clock is used (normal model of C compiler)

Library Name	Interrupt Response Time (μs (Max.))			
	RSTOP = 0, RSTS = 1		RSTOP = 1	
	Entry RAM location is outside short direct addressing range	Entry RAM location is in short direct addressing range	Entry RAM location is outside short direct addressing range	Entry RAM location is in short direct addressing range
Block blank check library	179/f_{CPU} + 567	179/f_{CPU} + 246	179/f_{CPU} + 1708	179/f_{CPU} + 569
Block erase library	179/f_{CPU} + 780	179/f_{CPU} + 459	179/f_{CPU} + 1921	179/f_{CPU} + 782
Word write library	333/f_{CPU} + 763	333/f_{CPU} + 443	333/f_{CPU} + 1871	333/f_{CPU} + 767
Block verify library	179/f_{CPU} + 580	179/f_{CPU} + 259	179/f_{CPU} + 1721	179/f_{CPU} + 582
Set information library	80/f_{CPU} + 456	80/f_{CPU} + 200	80/f_{CPU} + 1598	80/f_{CPU} + 459
EEPROM write library[Note]	29/f_{CPU} + 767 333/f_{CPU} + 696	29/f_{CPU} + 447 333/f_{CPU} + 376	29/f_{CPU} + 767 333/f_{CPU} + 1838	29/f_{CPU} + 447 333/f_{CPU} + 700

Note The longer value of the EEPROM write library interrupt response time becomes the Max. value, depending on the value of f_{CPU}.

Remarks 1. f_{CPU}: CPU operation clock frequency

2. RSTOP: Bit 0 of the internal oscillation mode register (RCM)

3. RSTS: Bit 7 of the internal oscillation mode register (RCM)

Table 27-16. Interrupt Response Time for Self Programming Library (Expanded-specification Products (μPD78F05xxA and 78F05xxDA)) (2/2)

(3) When high-speed system clock is used (static model of C compiler/assembler)

Library Name	Interrupt Response Time (μs (Max.))			
	RSTOP = 0, RSTS = 1		RSTOP = 1	
	Entry RAM location is outside short direct addressing range	Entry RAM location is in short direct addressing range	Entry RAM location is outside short direct addressing range	Entry RAM location is in short direct addressing range
Block blank check library	136/f_{CPU} + 567	136/f_{CPU} + 246	136/f_{CPU} + 1708	136/f_{CPU} + 569
Block erase library	136/f_{CPU} + 780	136/f_{CPU} + 459	136/f_{CPU} + 1921	136/f_{CPU} + 782
Word write library	272/f_{CPU} + 763	272/f_{CPU} + 443	272/f_{CPU} + 1871	272/f_{CPU} + 767
Block verify library	136/f_{CPU} + 580	136/f_{CPU} + 259	136/f_{CPU} + 1721	136/f_{CPU} + 582
Set information library	72/f_{CPU} + 456	72/f_{CPU} + 200	72/f_{CPU} + 1598	72/f_{CPU} + 459
EEPROM write library[Note]	19/f_{CPU} + 767 268/f_{CPU} + 696	19/f_{CPU} + 447 268/f_{CPU} + 376	19/f_{CPU} + 767 268/f_{CPU} + 1838	19/f_{CPU} + 447 268/f_{CPU} + 700

Note The longer value of the EEPROM write library interrupt response time becomes the Max. value, depending on the value of f_{CPU}.

Remarks 1. f_{CPU}: CPU operation clock frequency

2. RSTOP: Bit 0 of the internal oscillation mode register (RCM)

3. RSTS: Bit 7 of the internal oscillation mode register (RCM)

27.10.1 Boot swap function

If rewriting the boot area has failed during self-programming due to a power failure or some other cause, the data in the boot area may be lost and the program may not be restarted by resetting.

The boot swap function is used to avoid this problem.

Before erasing boot cluster 0[Note], which is a boot program area, by self-programming, write a new boot program to boot cluster 1 in advance. When the program has been correctly written to boot cluster 1, swap this boot cluster 1 and boot cluster 0 by using the set information function of the firmware of the 78K0/Kx2 microcontrollers, so that boot cluster 1 is used as a boot area. After that, erase or write the original boot program area, boot cluster 0.

As a result, even if a power failure occurs while the boot programming area is being rewritten, the program is executed correctly because it is booted from boot cluster 1 to be swapped when the program is reset and started next.

If the program has been correctly written to boot cluster 0, restore the original boot area by using the set information function of the firmware of the 78K0/Kx2 microcontrollers.

Note A boot cluster is a 4 KB area and boot clusters 0 and 1 are swapped by the boot swap function.

Boot cluster 0 (0000H to 0FFFH): Original boot program area
Boot cluster 1 (1000H to 1FFFH): Area subject to boot swap function

Caution When executing boot swapping, do not use the E.P.V command with the dedicated flash memory programmer.

Figure 27-15. Boot Swap Function

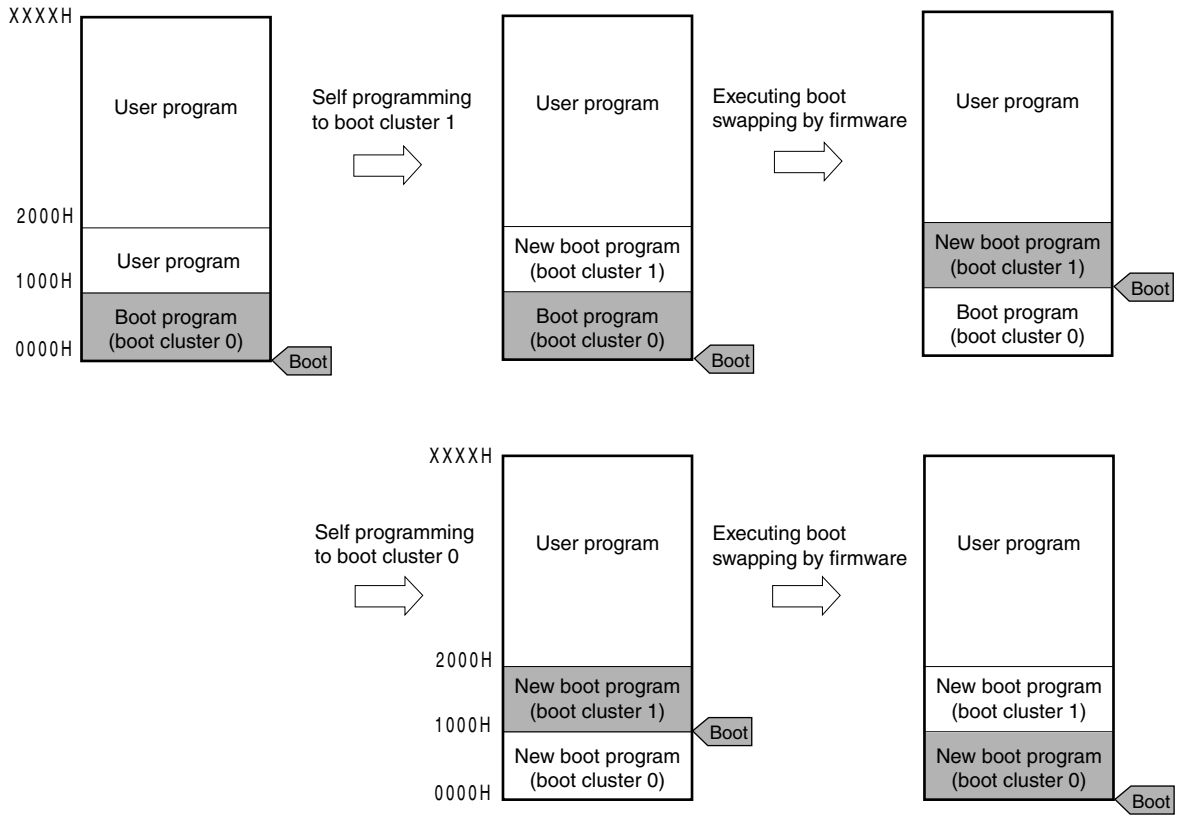

Remark Boot cluster 1 becomes 0000H to 0FFFH when a reset is generated after the boot flag has been set.

Figure 27-16. Example of Executing Boot Swapping

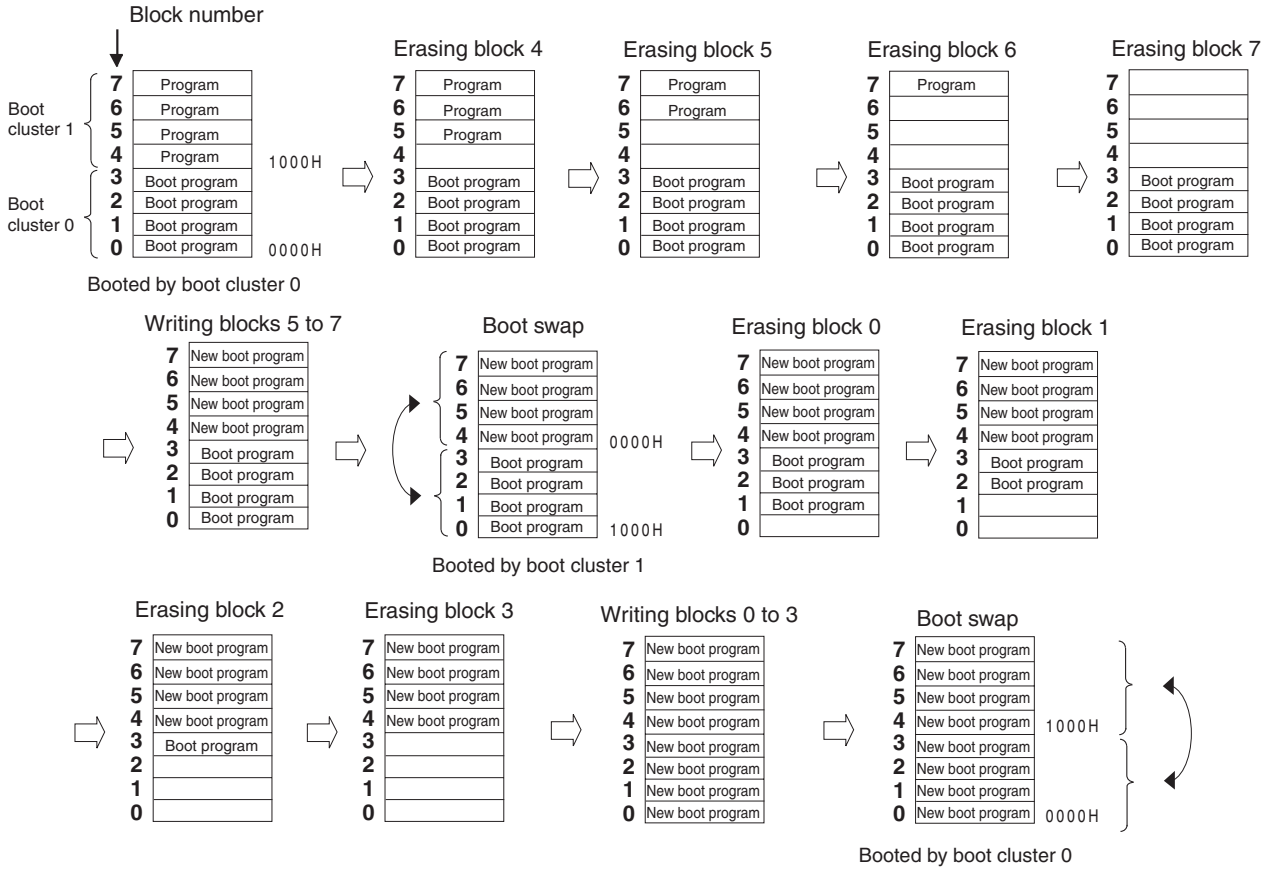

<R> 27.11 Creating ROM Code to Place Order for Previously Written Product

Before placing an order with Renesas Electronics for a previously written product, the ROM code for the order must be created.

To create the ROM code, use the Hex Consolidation Utility (hereafter abbreviated to HCU) on the finished programs (hex files) and optional data (such as security settings for flash memory programs).

The HCU is a software tool that includes functions required for creating ROM code.

The HCU can be downloaded at the Renesas Electronics website.

(1) Website

http:www2.renesas.com/micro/en/ods → Click Version-up Service.

(2) Downloading the HCU

To download the HCU, click Software for previously written flash products and then HCU_GUI.

Remark For details about how to install and use the HCU, see the materials (the user's manual) that comes with the HCU at the above website.

27.11.1 Procedure for using ROM code to place an order

Use the HCU to create the ROM code by following the procedure below, and then place your order with Renesas Electronics. For details, see the ROM Code Ordering Method Information (C10302J).

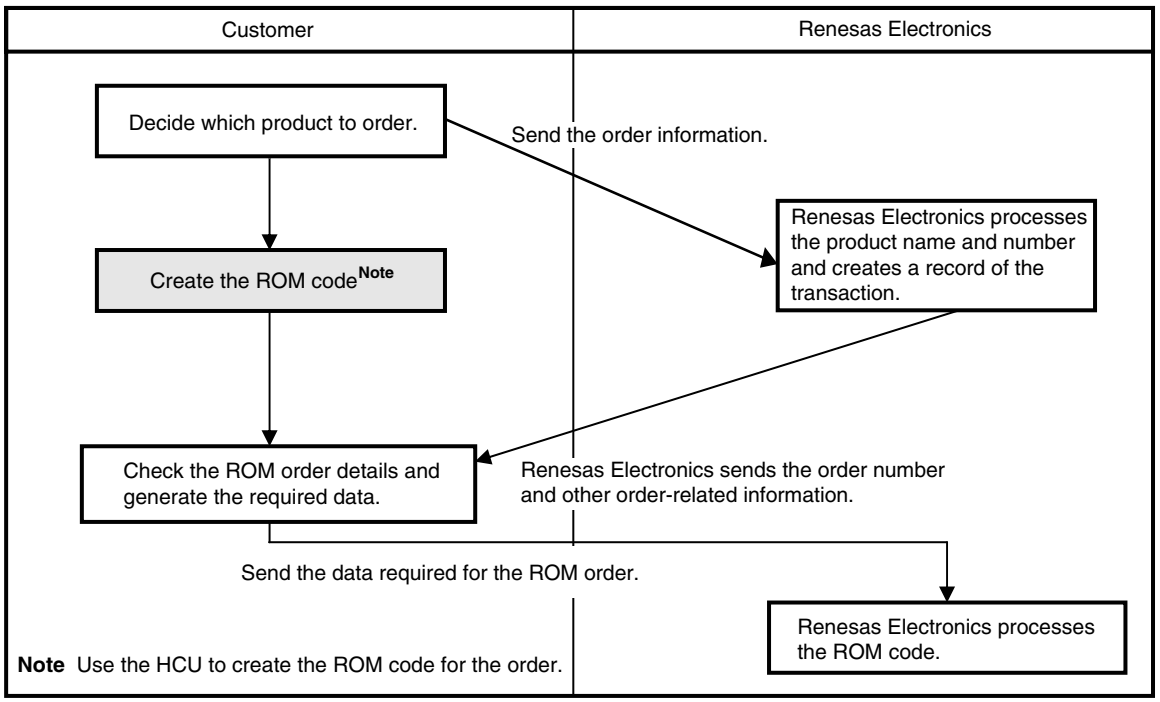

CHAPTER 28 ON-CHIP DEBUG FUNCTION (μPD78F05xxD and 78F05xxDA ONLY)

28.1 Connecting QB-MINI2 to μPD78F05xxD and 78F05xxDA

The μPD78F05xxD and 78F05xxDA use the V_{DD}, FLMD0, $\overline{\text{RESET}}$, OCD0A/X1 (or OCD1A/P31), OCD0B/X2 (or OCD1B/P32), and V_{SS} pins to communicate with the host machine via an on-chip debug emulator (QB-MINI2). Whether OCD0A/X1 and OCD1A/P31, or OCD0B/X2 and OCD1B/P32 are used can be selected.

Caution The μPD78F05xxD and 78F05xxDA have an on-chip debug function, which is provided for development and evaluation. Do not use the on-chip debug function in products designated for mass production, because the guaranteed number of rewritable times of the flash memory may be exceeded when this function is used, and product reliability therefore cannot be guaranteed. Renesas Electronics is not liable for problems occurring when the on-chip debug function is used.

Remark μPD78F05xxD: μPD78F0503D, 78F0513D, 78F0515D, 78F0527D, 78F0537D, 78F0547D
μPD78F05xxDA: μPD78F0503DA, 78F0513DA, 78F0515DA, 78F0527DA, 78F0537DA, 78F0547DA

Figure 28-1. Connection Example of QB-MINI2 and μPD78F05xxD and 78F05xxDA (When OCD0A/X1 and OCD0B/X2 Are Used)

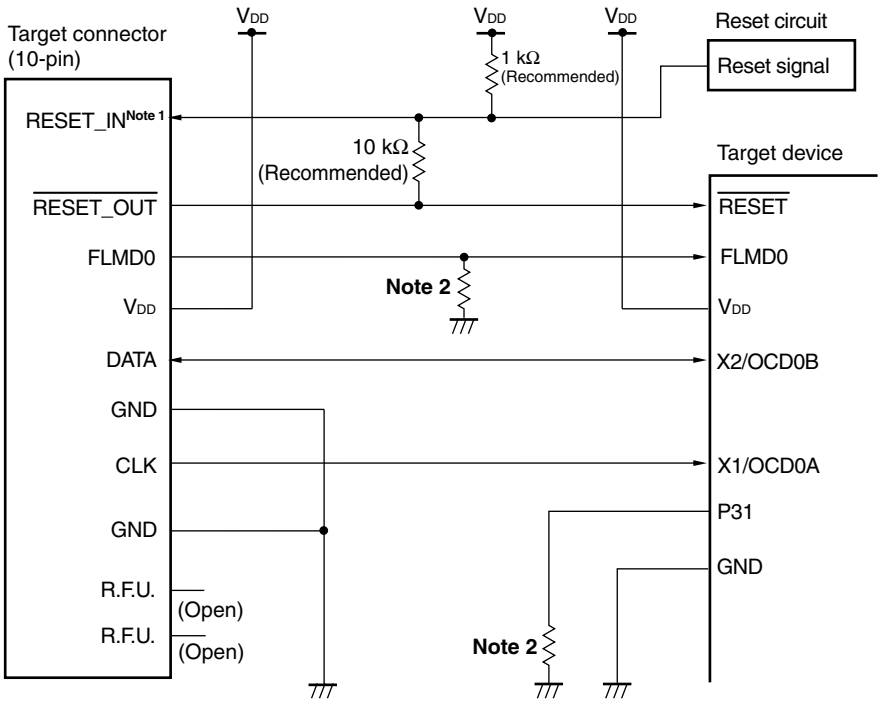

Notes 1. This connection is designed assuming that the reset signal is output from the N-ch open-drain buffer (output resistance: 100 Ω or less). For details, refer to **QB-MINI2 User's Manual (U18371E)**.

2. Make pull-down resistor 470 Ω or more (10 kΩ: recommended).

Cautions 1. Input the clock from the OCD0A/X1 pin during on-chip debugging.

2. Control the OCD0A/X1 and OCD0B/X2 pins by externally pulling down the OCD1A/P31 pin or by using an external circuit using the P130 pin (that outputs a low level when the device is reset).

Figure 28-2. Connection Example of QB-MINI2 and μPD78F05xxD and 78F05xxDA (When OCD1A/P31 and OCD1B/P32 Are Used)

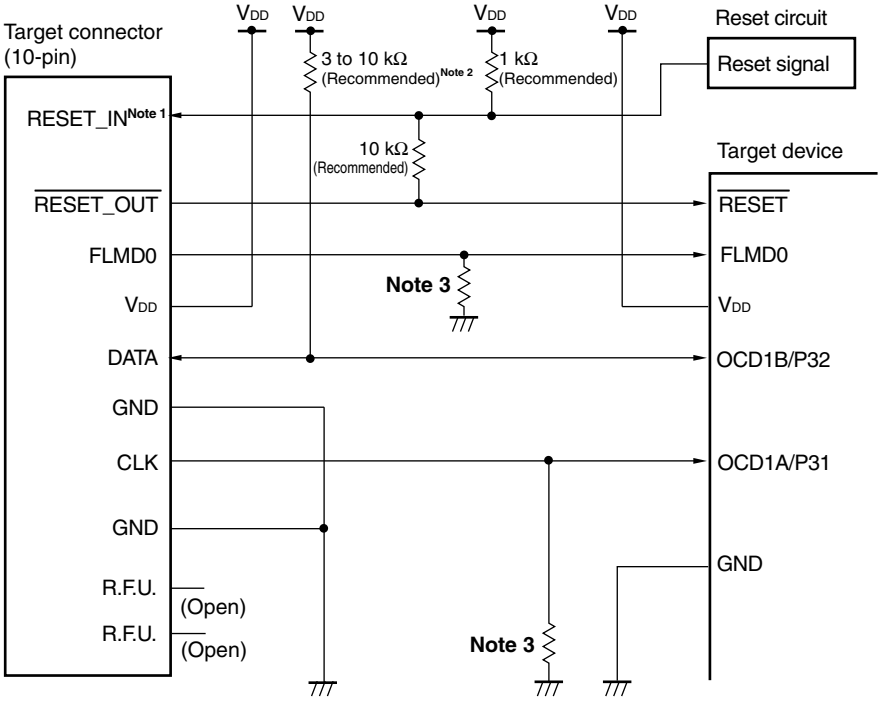

Notes 1. This connection is designed assuming that the reset signal is output from the N-ch open-drain buffer (output resistance: 100 Ω or less). For details, refer to **QB-MINI2 User's Manual (U18371E)**.

2. This is the processing of the pin when OCD1B/P32 is set as the input port (to prevent the pin from being left opened when not connected to QB-MINI2).

3. Make pull-down resistor 470 Ω or more (10 kΩ: recommended).

Connect the FLMD0 pin as follows when performing self programming by means of on-chip debugging.

Figure 28-3. Connection of FLMD0 Pin for Self Programming by Means of On-Chip Debugging

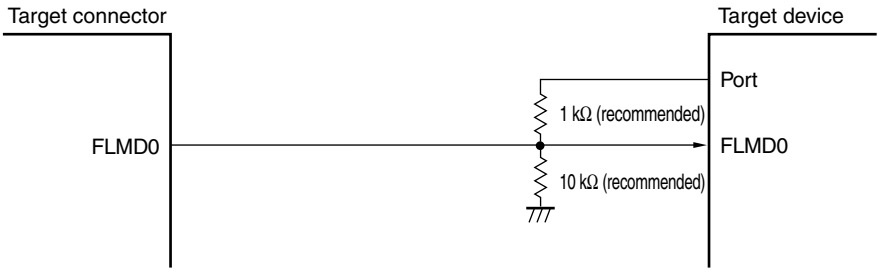

Caution When using the port that controls the FLMD0 pin, make sure that it satisfies the values of the high-level output current and FLMD0 supply voltage (minimum value: 0.8VDD) stated in CHAPTER 30 ELECTRICAL SPECIFICATIONS (STANDARD PRODUCTS) to CHAPTER 33 ELECTRICAL SPECIFICATIONS ((A2) GRADE PRODUCTS: TA = –40 to +125°C).

28.2 Reserved Area Used by QB-MINI2

QB-MINI2 uses the reserved areas shown in Figure 28-4 below to implement communication with the μPD78F05xxD and 78F05xxDA, or each debug function. The shaded reserved areas are used for the respective debug functions to be used, and the other areas are always used for debugging. These reserved areas can be secured by using user programs and compiler options.

When using a boot swap operation during self programming, set the same value to boot cluster 1 beforehand.

For details on reserved area, refer to **QB-MINI2 User's Manual (U18371E)**.

Figure 28-4. Reserved Area Used by QB-MINI2

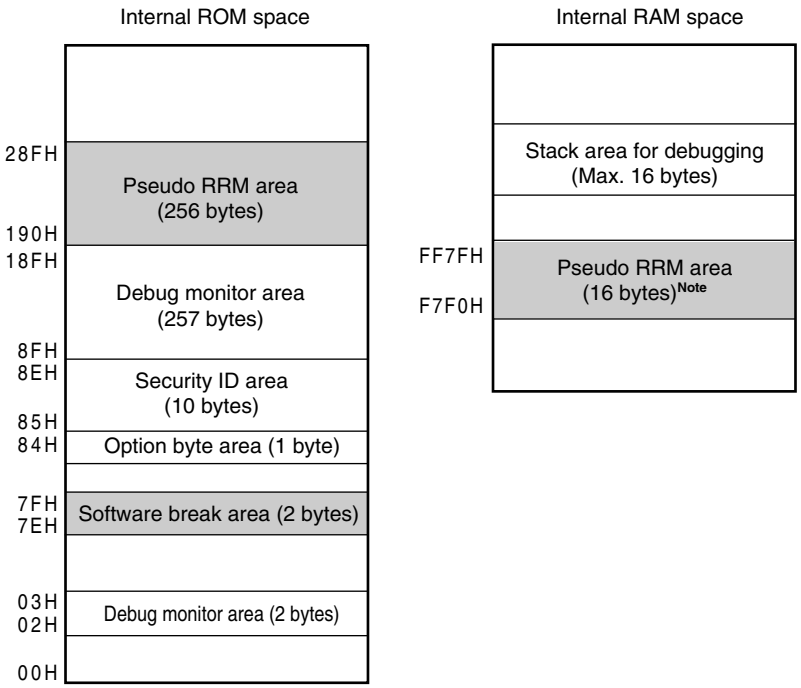

Note With products not incorporated the internal expansion RAM (μPD78F0503D, 78F0503DA, 78F0513D, and 78F0513DA), it is not necessary to secure this area.

Remark Shaded reserved areas: Area used for the respective debug functions to be used
Other reserved areas: Areas always used for debugging

CHAPTER 29 INSTRUCTION SET

This chapter lists each instruction set of the 78K0/Kx2 microcontrollers in table form. For details of each operation and operation code, refer to the separate document **78K/0 Series Instructions User's Manual (U12326E)**.

29.1 Conventions Used in Operation List

29.1.1 Operand identifiers and specification methods

Operands are written in the "Operand" column of each instruction in accordance with the specification method of the instruction operand identifier (refer to the assembler specifications for details). When there are two or more methods, select one of them. Uppercase letters and the symbols #, !, $ and [ ] are keywords and must be written as they are. Each symbol has the following meaning.

- #: Immediate data specification
- !: Absolute address specification
- $: Relative address specification
- [ ]: Indirect address specification

In the case of immediate data, describe an appropriate numeric value or a label. When using a label, be sure to write the #, !, $, and [ ] symbols.

For operand register identifiers r and rp, either function names (X, A, C, etc.) or absolute names (names in parentheses in the table below, R0, R1, R2, etc.) can be used for specification.

Table 29-1. Operand Identifiers and Specification Methods

Identifier	Specification Method
r	X (R0), A (R1), C (R2), B (R3), E (R4), D (R5), L (R6), H (R7)
rp	AX (RP0), BC (RP1), DE (RP2), HL (RP3)
sfr	Special function register symbol[Note]
sfrp	Special function register symbol (16-bit manipulatable register even addresses only)[Note]
saddr	FE20H to FF1FH Immediate data or labels
saddrp	FE20H to FF1FH Immediate data or labels (even address only)
addr16	0000H to FFFFH Immediate data or labels (Only even addresses for 16-bit data transfer instructions)
addr11	0800H to 0FFFH Immediate data or labels
addr5	0040H to 007FH Immediate data or labels (even address only)
word	16-bit immediate data or label
byte	8-bit immediate data or label
bit	3-bit immediate data or label
RBn	RB0 to RB3

Note Addresses from FFD0H to FFDFH cannot be accessed with these operands.

Remark For special function register symbols, see **Table 3-8 Special Function Register List**.

29.1.2 Description of operation column

A: A register; 8-bit accumulator
X: X register
B: B register
C: C register
D: D register
E: E register
H: H register
L: L register
AX: AX register pair; 16-bit accumulator
BC: BC register pair
DE: DE register pair
HL: HL register pair
PC: Program counter
SP: Stack pointer
PSW: Program status word
CY: Carry flag
AC: Auxiliary carry flag
Z: Zero flag
RBS: Register bank select flag
IE: Interrupt request enable flag
( ): Memory contents indicated by address or register contents in parentheses
X_H, X_L: Higher 8 bits and lower 8 bits of 16-bit register
$\wedge$: Logical product (AND)
$\vee$: Logical sum (OR)
$\veebar$: Exclusive logical sum (exclusive OR)
$\overline{\ \ }$: Inverted data
addr16: 16-bit immediate data or label
jdisp8: Signed 8-bit data (displacement value)

29.1.3 Description of flag operation column

(Blank): Not affected
0: Cleared to 0
1: Set to 1
×: Set/cleared according to the result
R: Previously saved value is restored

29.2 Operation List

Instruction Group	Mnemonic	Operands	Bytes	Clocks		Operation	Flag
				Note 1	Note 2		Z AC CY
8-bit data transfer	**MOV**	r, #byte	2	4	–	r ← byte	
		saddr, #byte	3	6	7	(saddr) ← byte	
		sfr, #byte	3	–	7	sfr ← byte	
		A, r Note 3	1	2	–	A ← r	
		r, A Note 3	1	2	–	r ← A	
		A, saddr	2	4	5	A ← (saddr)	
		saddr, A	2	4	5	(saddr) ← A	
		A, sfr	2	–	5	A ← sfr	
		sfr, A	2	–	5	sfr ← A	
		A, !addr16	3	8	9	A ← (addr16)	
		!addr16, A	3	8	9	(addr16) ← A	
		PSW, #byte	3	–	7	PSW ← byte	× × ×
		A, PSW	2	–	5	A ← PSW	
		PSW, A	2	–	5	PSW ← A	× × ×
		A, [DE]	1	4	5	A ← (DE)	
		[DE], A	1	4	5	(DE) ← A	
		A, [HL]	1	4	5	A ← (HL)	
		[HL], A	1	4	5	(HL) ← A	
		A, [HL + byte]	2	8	9	A ← (HL + byte)	
		[HL + byte], A	2	8	9	(HL + byte) ← A	
		A, [HL + B]	1	6	7	A ← (HL + B)	
		[HL + B], A	1	6	7	(HL + B) ← A	
		A, [HL + C]	1	6	7	A ← (HL + C)	
		[HL + C], A	1	6	7	(HL + C) ← A	
	XCH	A, r Note 3	1	2	–	A ↔ r	
		A, saddr	2	4	6	A ↔ (saddr)	
		A, sfr	2	–	6	A ↔ (sfr)	
		A, !addr16	3	8	10	A ↔ (addr16)	
		A, [DE]	1	4	6	A ↔ (DE)	
		A, [HL]	1	4	6	A ↔ (HL)	
		A, [HL + byte]	2	8	10	A ↔ (HL + byte)	
		A, [HL + B]	2	8	10	A ↔ (HL + B)	
		A, [HL + C]	2	8	10	A ↔ (HL + C)	

Notes 1. When the internal high-speed RAM area is accessed or for an instruction with no data access

2. When an area except the internal high-speed RAM area is accessed

3. Except “r = A”

Remarks 1. One instruction clock cycle is one cycle of the CPU clock (f_{CPU}) selected by the processor clock control register (PCC).

2. This clock cycle applies to the internal ROM program.

Instruction Group	Mnemonic	Operands	Bytes	Clocks		Operation	Flag
				Note 1	Note 2		Z AC CY
16-bit data transfer	**MOVW**	rp, #word	3	6	–	rp ← word	
		saddrp, #word	4	8	10	(saddrp) ← word	
		sfrp, #word	4	–	10	sfrp ← word	
		AX, saddrp	2	6	8	AX ← (saddrp)	
		saddrp, AX	2	6	8	(saddrp) ← AX	
		AX, sfrp	2	–	8	AX ← sfrp	
		sfrp, AX	2	–	8	sfrp ← AX	
		AX, rp Note 3	1	4	–	AX ← rp	
		rp, AX Note 3	1	4	–	rp ← AX	
		AX, !addr16	3	10	12	AX ← (addr16)	
		!addr16, AX	3	10	12	(addr16) ← AX	
	XCHW	AX, rp Note 3	1	4	–	AX ↔ rp	
8-bit operation	**ADD**	A, #byte	2	4	–	A, CY ← A + byte	× × ×
		saddr, #byte	3	6	8	(saddr), CY ← (saddr) + byte	× × ×
		A, r Note 4	2	4	–	A, CY ← A + r	× × ×
		r, A	2	4	–	r, CY ← r + A	× × ×
		A, saddr	2	4	5	A, CY ← A + (saddr)	× × ×
		A, !addr16	3	8	9	A, CY ← A + (addr16)	× × ×
		A, [HL]	1	4	5	A, CY ← A + (HL)	× × ×
		A, [HL + byte]	2	8	9	A, CY ← A + (HL + byte)	× × ×
		A, [HL + B]	2	8	9	A, CY ← A + (HL + B)	× × ×
		A, [HL + C]	2	8	9	A, CY ← A + (HL + C)	× × ×
	ADDC	A, #byte	2	4	–	A, CY ← A + byte + CY	× × ×
		saddr, #byte	3	6	8	(saddr), CY ← (saddr) + byte + CY	× × ×
		A, r Note 4	2	4	–	A, CY ← A + r + CY	× × ×
		r, A	2	4	–	r, CY ← r + A + CY	× × ×
		A, saddr	2	4	5	A, CY ← A + (saddr) + CY	× × ×
		A, !addr16	3	8	9	A, CY ← A + (addr16) + C	× × ×
		A, [HL]	1	4	5	A, CY ← A + (HL) + CY	× × ×
		A, [HL + byte]	2	8	9	A, CY ← A + (HL + byte) + CY	× × ×
		A, [HL + B]	2	8	9	A, CY ← A + (HL + B) + CY	× × ×
		A, [HL + C]	2	8	9	A, CY ← A + (HL + C) + CY	× × ×

Notes 1. When the internal high-speed RAM area is accessed or for an instruction with no data access

2. When an area except the internal high-speed RAM area is accessed

3. Only when rp = BC, DE or HL

4. Except “r = A”

Remarks 1. One instruction clock cycle is one cycle of the CPU clock (f_{CPU}) selected by the processor clock control register (PCC).

2. This clock cycle applies to the internal ROM program.

Instruction Group	Mnemonic	Operands	Bytes	Clocks		Operation	Flag
				Note 1	Note 2		Z AC CY
8-bit operation	**SUB**	A, #byte	2	4	–	A, CY ← A – byte	× × ×
		saddr, #byte	3	6	8	(saddr), CY ← (saddr) – byte	× × ×
		A, r Note 3	2	4	–	A, CY ← A – r	× × ×
		r, A	2	4	–	r, CY ← r – A	× × ×
		A, saddr	2	4	5	A, CY ← A – (saddr)	× × ×
		A, !addr16	3	8	9	A, CY ← A – (addr16)	× × ×
		A, [HL]	1	4	5	A, CY ← A – (HL)	× × ×
		A, [HL + byte]	2	8	9	A, CY ← A – (HL + byte)	× × ×
		A, [HL + B]	2	8	9	A, CY ← A – (HL + B)	× × ×
		A, [HL + C]	2	8	9	A, CY ← A – (HL + C)	× × ×
	SUBC	A, #byte	2	4	–	A, CY ← A – byte – CY	× × ×
		saddr, #byte	3	6	8	(saddr), CY ← (saddr) – byte – CY	× × ×
		A, r Note 3	2	4	–	A, CY ← A – r – CY	× × ×
		r, A	2	4	–	r, CY ← r – A – CY	× × ×
		A, saddr	2	4	5	A, CY ← A – (saddr) – CY	× × ×
		A, !addr16	3	8	9	A, CY ← A – (addr16) – CY	× × ×
		A, [HL]	1	4	5	A, CY ← A – (HL) – CY	× × ×
		A, [HL + byte]	2	8	9	A, CY ← A – (HL + byte) – CY	× × ×
		A, [HL + B]	2	8	9	A, CY ← A – (HL + B) – CY	× × ×
		A, [HL + C]	2	8	9	A, CY ← A – (HL + C) – CY	× × ×
	AND	A, #byte	2	4	–	A ← A ∧ byte	×
		saddr, #byte	3	6	8	(saddr) ← (saddr) ∧ byte	×
		A, r Note 3	2	4	–	A ← A ∧ r	×
		r, A	2	4	–	r ← r ∧ A	×
		A, saddr	2	4	5	A ← A ∧ (saddr)	×
		A, !addr16	3	8	9	A ← A ∧ (addr16)	×
		A, [HL]	1	4	5	A ← A ∧ (HL)	×
		A, [HL + byte]	2	8	9	A ← A ∧ (HL + byte)	×
		A, [HL + B]	2	8	9	A ← A ∧ (HL + B)	×
		A, [HL + C]	2	8	9	A ← A ∧ (HL + C)	×

Notes 1. When the internal high-speed RAM area is accessed or for an instruction with no data access

2. When an area except the internal high-speed RAM area is accessed

3. Except “r = A”

Remarks 1. One instruction clock cycle is one cycle of the CPU clock (f_{CPU}) selected by the processor clock control register (PCC).

2. This clock cycle applies to the internal ROM program.

Instruction Group	Mnemonic	Operands	Bytes	Clocks		Operation	Flag
				Note 1	Note 2		Z AC CY
8-bit operation	**OR**	A, #byte	2	4	–	A ← A ∨ byte	×
		saddr, #byte	3	6	8	(saddr) ← (saddr) ∨ byte	×
		A, r Note 3	2	4	–	A ← A ∨ r	×
		r, A	2	4	–	r ← r ∨ A	×
		A, saddr	2	4	5	A ← A ∨ (saddr)	×
		A, !addr16	3	8	9	A ← A ∨ (addr16)	×
		A, [HL]	1	4	5	A ← A ∨ (HL)	×
		A, [HL + byte]	2	8	9	A ← A ∨ (HL + byte)	×
		A, [HL + B]	2	8	9	A ← A ∨ (HL + B)	×
		A, [HL + C]	2	8	9	A ← A ∨ (HL + C)	×
	XOR	A, #byte	2	4	–	A ← A ⊻ byte	×
		saddr, #byte	3	6	8	(saddr) ← (saddr) ⊻ byte	×
		A, r Note 3	2	4	–	A ← A ⊻ r	×
		r, A	2	4	–	r ← r ⊻ A	×
		A, saddr	2	4	5	A ← A ⊻ (saddr)	×
		A, !addr16	3	8	9	A ← A ⊻ (addr16)	×
		A, [HL]	1	4	5	A ← A ⊻ (HL)	×
		A, [HL + byte]	2	8	9	A ← A ⊻ (HL + byte)	×
		A, [HL + B]	2	8	9	A ← A ⊻ (HL + B)	×
		A, [HL + C]	2	8	9	A ← A ⊻ (HL + C)	×
	CMP	A, #byte	2	4	–	A – byte	× × ×
		saddr, #byte	3	6	8	(saddr) – byte	× × ×
		A, r Note 3	2	4	–	A – r	× × ×
		r, A	2	4	–	r – A	× × ×
		A, saddr	2	4	5	A – (saddr)	× × ×
		A, !addr16	3	8	9	A – (addr16)	× × ×
		A, [HL]	1	4	5	A – (HL)	× × ×
		A, [HL + byte]	2	8	9	A – (HL + byte)	× × ×
		A, [HL + B]	2	8	9	A – (HL + B)	× × ×
		A, [HL + C]	2	8	9	A – (HL + C)	× × ×

Notes 1. When the internal high-speed RAM area is accessed or for an instruction with no data access

2. When an area except the internal high-speed RAM area is accessed

3. Except “r = A”

Remarks 1. One instruction clock cycle is one cycle of the CPU clock (f_{CPU}) selected by the processor clock control register (PCC).

2. This clock cycle applies to the internal ROM program.

Instruction Group	Mnemonic	Operands	Bytes	Clocks		Operation	Flag		
				Note 1	Note 2		Z	AC	CY
16-bit operation	**ADDW**	AX, #word	3	6	–	AX, CY ← AX + word	×	×	×
	SUBW	AX, #word	3	6	–	AX, CY ← AX – word	×	×	×
	CMPW	AX, #word	3	6	–	AX – word	×	×	×
Multiply/ divide	**MULU**	X	2	16	–	AX ← A × X			
	DIVUW	C	2	25	–	AX (Quotient), C (Remainder) ← AX ÷ C			
Increment/ decrement	**INC**	r	1	2	–	r ← r + 1	×	×	
		saddr	2	4	6	(saddr) ← (saddr) + 1	×	×	
	DEC	r	1	2	–	r ← r – 1	×	×	
		saddr	2	4	6	(saddr) ← (saddr) – 1	×	×	
	INCW	rp	1	4	–	rp ← rp + 1			
	DECW	rp	1	4	–	rp ← rp – 1			
Rotate	**ROR**	A, 1	1	2	–	(CY, A_7 ← A_0, A_{m-1} ← A_m) × 1 time			×
	ROL	A, 1	1	2	–	(CY, A_0 ← A_7, A_{m+1} ← A_m) × 1 time			×
	RORC	A, 1	1	2	–	(CY ← A_0, A_7 ← CY, A_{m-1} ← A_m) × 1 time			×
	ROLC	A, 1	1	2	–	(CY ← A_7, A_0 ← CY, A_{m+1} ← A_m) × 1 time			×
	ROR4	[HL]	2	10	12	A_{3-0} ← $(HL)_{3-0}$, $(HL)_{7-4}$ ← A_{3-0}, $(HL)_{3-0}$ ← $(HL)_{7-4}$			
	ROL4	[HL]	2	10	12	A_{3-0} ← $(HL)_{7-4}$, $(HL)_{3-0}$ ← A_{3-0}, $(HL)_{7-4}$ ← $(HL)_{3-0}$			
BCD adjustment	**ADJBA**		2	4	–	Decimal Adjust Accumulator after Addition	×	×	×
	ADJBS		2	4	–	Decimal Adjust Accumulator after Subtract	×	×	×
Bit manipulate	**MOV1**	CY, saddr.bit	3	6	7	CY ← (saddr.bit)			×
		CY, sfr.bit	3	–	7	CY ← sfr.bit			×
		CY, A.bit	2	4	–	CY ← A.bit			×
		CY, PSW.bit	3	–	7	CY ← PSW.bit			×
		CY, [HL].bit	2	6	7	CY ← (HL).bit			×
		saddr.bit, CY	3	6	8	(saddr.bit) ← CY			
		sfr.bit, CY	3	–	8	sfr.bit ← CY			
		A.bit, CY	2	4	–	A.bit ← CY			
		PSW.bit, CY	3	–	8	PSW.bit ← CY	×	×	
		[HL].bit, CY	2	6	8	(HL).bit ← CY			

Notes 1. When the internal high-speed RAM area is accessed or for an instruction with no data access

2. When an area except the internal high-speed RAM area is accessed

Remarks 1. One instruction clock cycle is one cycle of the CPU clock (f_{CPU}) selected by the processor clock control register (PCC).

2. This clock cycle applies to the internal ROM program.

Instruction Group	Mnemonic	Operands	Bytes	Clocks		Operation	Flag
				Note 1	Note 2		Z AC CY
Bit manipulate	**AND1**	CY, saddr.bit	3	6	7	CY ← CY ∧ (saddr.bit)	×
		CY, sfr.bit	3	–	7	CY ← CY ∧ sfr.bit	×
		CY, A.bit	2	4	–	CY ← CY ∧ A.bit	×
		CY, PSW.bit	3	–	7	CY ← CY ∧ PSW.bit	×
		CY, [HL].bit	2	6	7	CY ← CY ∧ (HL).bit	×
	OR1	CY, saddr.bit	3	6	7	CY ← CY ∨ (saddr.bit)	×
		CY, sfr.bit	3	–	7	CY ← CY ∨ sfr.bit	×
		CY, A.bit	2	4	–	CY ← CY ∨ A.bit	×
		CY, PSW.bit	3	–	7	CY ← CY ∨ PSW.bit	×
		CY, [HL].bit	2	6	7	CY ← CY ∨ (HL).bit	×
	XOR1	CY, saddr.bit	3	6	7	CY ← CY ⊻ (saddr.bit)	×
		CY, sfr.bit	3	–	7	CY ← CY ⊻ sfr.bit	×
		CY, A.bit	2	4	–	CY ← CY ⊻ A.bit	×
		CY, PSW. bit	3	–	7	CY ← CY ⊻ PSW.bit	×
		CY, [HL].bit	2	6	7	CY ← CY ⊻ (HL).bit	×
	SET1	saddr.bit	2	4	6	(saddr.bit) ← 1	
		sfr.bit	3	–	8	sfr.bit ← 1	
		A.bit	2	4	–	A.bit ← 1	
		PSW.bit	2	–	6	PSW.bit ← 1	× × ×
		[HL].bit	2	6	8	(HL).bit ← 1	
	CLR1	saddr.bit	2	4	6	(saddr.bit) ← 0	
		sfr.bit	3	–	8	sfr.bit ← 0	
		A.bit	2	4	–	A.bit ← 0	
		PSW.bit	2	–	6	PSW.bit ← 0	× × ×
		[HL].bit	2	6	8	(HL).bit ← 0	
	SET1	CY	1	2	–	CY ← 1	1
	CLR1	CY	1	2	–	CY ← 0	0
	NOT1	CY	1	2	–	CY ← $\overline{CY}$	×

Notes 1. When the internal high-speed RAM area is accessed or for an instruction with no data access

2. When an area except the internal high-speed RAM area is accessed

Remarks 1. One instruction clock cycle is one cycle of the CPU clock (f_{CPU}) selected by the processor clock control register (PCC).

2. This clock cycle applies to the internal ROM program.

Instruction Group	Mnemonic	Operands	Bytes	Clocks		Operation	Flag
				Note 1	Note 2		Z AC CY
Call/return	**CALL**	!addr16	3	7	–	(SP – 1) ← (PC + 3)H, (SP – 2) ← (PC + 3)L, PC ← addr16, SP ← SP – 2	
	CALLF	!addr11	2	5	–	(SP – 1) ← (PC + 2)H, (SP – 2) ← (PC + 2)L, PC15 – 11 ← 00001, PC10 – 0 ← addr11, SP ← SP – 2	
	CALLT	[addr5]	1	6	–	(SP – 1) ← (PC + 1)H, (SP – 2) ← (PC + 1)L, PCH ← (addr5 + 1), PCL ← (addr5), SP ← SP – 2	
	BRK		1	6	–	(SP – 1) ← PSW, (SP – 2) ← (PC + 1)H, (SP – 3) ← (PC + 1)L, PCH ← (003FH), PCL ← (003EH), SP ← SP – 3, IE ← 0	
	RET		1	6	–	PCH ← (SP + 1), PCL ← (SP), SP ← SP + 2	
	RETI		1	6	–	PCH ← (SP + 1), PCL ← (SP), PSW ← (SP + 2), SP ← SP + 3	R R R
	RETB		1	6	–	PCH ← (SP + 1), PCL ← (SP), PSW ← (SP + 2), SP ← SP + 3	R R R
Stack manipulate	**PUSH**	PSW	1	2	–	(SP – 1) ← PSW, SP ← SP – 1	
		rp	1	4	–	(SP – 1) ← rpH, (SP – 2) ← rpL, SP ← SP – 2	
	POP	PSW	1	2	–	PSW ← (SP), SP ← SP + 1	R R R
		rp	1	4	–	rpH ← (SP + 1), rpL ← (SP), SP ← SP + 2	
	MOVW	SP, #word	4	–	10	SP ← word	
		SP, AX	2	–	8	SP ← AX	
		AX, SP	2	–	8	AX ← SP	
Unconditional branch	**BR**	!addr16	3	6	–	PC ← addr16	
		$addr16	2	6	–	PC ← PC + 2 + jdisp8	
		AX	2	8	–	PCH ← A, PCL ← X	
Conditional branch	**BC**	$addr16	2	6	–	PC ← PC + 2 + jdisp8 if CY = 1	
	BNC	$addr16	2	6	–	PC ← PC + 2 + jdisp8 if CY = 0	
	BZ	$addr16	2	6	–	PC ← PC + 2 + jdisp8 if Z = 1	
	BNZ	$addr16	2	6	–	PC ← PC + 2 + jdisp8 if Z = 0	

Notes 1. When the internal high-speed RAM area is accessed or for an instruction with no data access

2. When an area except the internal high-speed RAM area is accessed

Remarks 1. One instruction clock cycle is one cycle of the CPU clock (fCPU) selected by the processor clock control register (PCC).

2. This clock cycle applies to the internal ROM program.

Instruction Group	Mnemonic	Operands	Bytes	Clocks		Operation	Flag
				Note 1	Note 2		Z AC CY
Conditional branch	**BT**	saddr.bit, $addr16	3	8	9	PC ← PC + 3 + jdisp8 if (saddr.bit) = 1	
		sfr.bit, $addr16	4	–	11	PC ← PC + 4 + jdisp8 if sfr.bit = 1	
		A.bit, $addr16	3	8	–	PC ← PC + 3 + jdisp8 if A.bit = 1	
		PSW.bit, $addr16	3	–	9	PC ← PC + 3 + jdisp8 if PSW.bit = 1	
		[HL].bit, $addr16	3	10	11	PC ← PC + 3 + jdisp8 if (HL).bit = 1	
	BF	saddr.bit, $addr16	4	10	11	PC ← PC + 4 + jdisp8 if (saddr.bit) = 0	
		sfr.bit, $addr16	4	–	11	PC ← PC + 4 + jdisp8 if sfr.bit = 0	
		A.bit, $addr16	3	8	–	PC ← PC + 3 + jdisp8 if A.bit = 0	
		PSW.bit, $addr16	4	–	11	PC ← PC + 4 + jdisp8 if PSW. bit = 0	
		[HL].bit, $addr16	3	10	11	PC ← PC + 3 + jdisp8 if (HL).bit = 0	
	BTCLR	saddr.bit, $addr16	4	10	12	PC ← PC + 4 + jdisp8 if (saddr.bit) = 1 then reset (saddr.bit)	
		sfr.bit, $addr16	4	–	12	PC ← PC + 4 + jdisp8 if sfr.bit = 1 then reset sfr.bit	
		A.bit, $addr16	3	8	–	PC ← PC + 3 + jdisp8 if A.bit = 1 then reset A.bit	
		PSW.bit, $addr16	4	–	12	PC ← PC + 4 + jdisp8 if PSW.bit = 1 then reset PSW.bit	× × ×
		[HL].bit, $addr16	3	10	12	PC ← PC + 3 + jdisp8 if (HL).bit = 1 then reset (HL).bit	
	DBNZ	B, $addr16	2	6	–	B ← B – 1, then PC ← PC + 2 + jdisp8 if B ≠ 0	
		C, $addr16	2	6	–	C ← C –1, then PC ← PC + 2 + jdisp8 if C ≠ 0	
		saddr, $addr16	3	8	10	(saddr) ← (saddr) – 1, then PC ← PC + 3 + jdisp8 if (saddr) ≠ 0	
CPU control	**SEL**	RBn	2	4	–	RBS1, 0 ← n	
	NOP		1	2	–	No Operation	
	EI		2	–	6	IE ← 1 (Enable Interrupt)	
	DI		2	–	6	IE ← 0 (Disable Interrupt)	
	HALT		2	6	–	Set HALT Mode	
	STOP		2	6	–	Set STOP Mode	

Notes 1. When the internal high-speed RAM area is accessed or for an instruction with no data access

2. When an area except the internal high-speed RAM area is accessed

Remarks 1. One instruction clock cycle is one cycle of the CPU clock (f_{CPU}) selected by the processor clock control register (PCC).

2. This clock cycle applies to the internal ROM program.

29.3 Instructions Listed by Addressing Type

(1) 8-bit instructions

MOV, XCH, ADD, ADDC, SUB, SUBC, AND, OR, XOR, CMP, MULU, DIVUW, INC, DEC, ROR, ROL, RORC, ROLC, ROR4, ROL4, PUSH, POP, DBNZ

Second Operand / First Operand	#byte	A	r[Note]	sfr	saddr	!addr16	PSW	[DE]	[HL]	[HL + byte] [HL + B] [HL + C]	$addr16	1	None
A	ADD ADDC SUB SUBC AND OR XOR CMP		MOV XCH ADD ADDC SUB SUBC AND OR XOR CMP	MOV XCH	MOV XCH ADD ADDC SUB SUBC AND OR XOR CMP	MOV XCH ADD ADDC SUB SUBC AND OR XOR CMP	MOV	MOV XCH	MOV XCH ADD ADDC SUB SUBC AND OR XOR CMP	MOV XCH ADD ADDC SUB SUBC AND OR XOR CMP		ROR ROL RORC ROLC	
r	MOV	MOV ADD ADDC SUB SUBC AND OR XOR CMP											INC DEC
B, C											DBNZ		
sfr	MOV	MOV											
saddr	MOV ADD ADDC SUB SUBC AND OR XOR CMP	MOV									DBNZ		INC DEC
!addr16		MOV											
PSW	MOV	MOV											PUSH POP
[DE]		MOV											
[HL]		MOV											ROR4 ROL4
[HL + byte] [HL + B] [HL + C]		MOV											
X													MULU
C													DIVUW

Note Except “r = A”

(2) 16-bit instructions

MOVW, XCHW, ADDW, SUBW, CMPW, PUSH, POP, INCW, DECW

Second Operand / First Operand	#word	AX	rp[Note]	sfrp	saddrp	!addr16	SP	None
AX	ADDW SUBW CMPW		MOVW XCHW	MOVW	MOVW	MOVW	MOVW	
rp	MOVW	MOVW[Note]						INCW DECW PUSH POP
sfrp	MOVW	MOVW						
saddrp	MOVW	MOVW						
!addr16		MOVW						
SP	MOVW	MOVW						

Note Only when rp = BC, DE, HL

(3) Bit manipulation instructions

MOV1, AND1, OR1, XOR1, SET1, CLR1, NOT1, BT, BF, BTCLR

Second Operand / First Operand	A.bit	sfr.bit	saddr.bit	PSW.bit	[HL].bit	CY	$addr16	None
A.bit						MOV1	BT BF BTCLR	SET1 CLR1
sfr.bit						MOV1	BT BF BTCLR	SET1 CLR1
saddr.bit						MOV1	BT BF BTCLR	SET1 CLR1
PSW.bit						MOV1	BT BF BTCLR	SET1 CLR1
[HL].bit						MOV1	BT BF BTCLR	SET1 CLR1
CY	MOV1 AND1 OR1 XOR1	MOV1 AND1 OR1 XOR1	MOV1 AND1 OR1 XOR1	MOV1 AND1 OR1 XOR1	MOV1 AND1 OR1 XOR1			SET1 CLR1 NOT1

(4) Call instructions/branch instructions

CALL, CALLF, CALLT, BR, BC, BNC, BZ, BNZ, BT, BF, BTCLR, DBNZ

First Operand \ Second Operand	AX	!addr16	!addr11	[addr5]	$addr16
Basic instruction	BR	CALL BR	CALLF	CALLT	BR BC BNC BZ BNZ
Compound instruction					BT BF BTCLR DBNZ

(5) Other instructions

ADJBA, ADJBS, BRK, RET, RETI, RETB, SEL, NOP, EI, DI, HALT, STOP

CHAPTER 30 ELECTRICAL SPECIFICATIONS (STANDARD PRODUCTS)

Target Products	Conventional-specification Products	Expanded-specification Products
78K0/KB2	μPD78F0500, 78F0501, 78F0502, 78F0503, 78F0503D	μPD78F0500A, 78F0501A, 78F0502A, 78F0503A, 78F0503DA
78K0/KC2	μPD78F0511, 78F0512, 78F0513, 78F0514, 78F0515, 78F0513D, 78F0515D	μPD78F0511A, 78F0512A, 78F0513A, 78F0514A, 78F0515A, 78F0513DA, 78F0515DA
78K0/KD2	μPD78F0521, 78F0522, 78F0523, 78F0524, 78F0525, 78F0526, 78F0527, 78F0527D	μPD78F0521A, 78F0522A, 78F0523A, 78F0524A, 78F0525A, 78F0526A, 78F0527A, 78F0527DA
78K0/KE2	μPD78F0531, 78F0532, 78F0533, 78F0534, 78F0535, 78F0536, 78F0537, 78F0537D	μPD78F0531A, 78F0532A, 78F0533A, 78F0534A, 78F0535A, 78F0536A, 78F0537A, 78F0537DA
78K0/KF2	μPD78F0544, 78F0545, 78F0546, 78F0547, 78F0547D	μPD78F0544A, 78F0545A, 78F0546A, 78F0547A, 78F0547DA

The following items are described separately for conventional-specification products (μPD78F05xx, 78F05xxD) and expanded-specification products (μPD78F05xxA, 78F05xxDA).

- X1 clock oscillation frequency (**X1 oscillator characteristics**)
- Instruction cycle, peripheral hardware clock frequency, external main system clock frequency, external main system clock input high-level width, and external main system clock input low-level width (**(1) Basic operation** in **AC characteristics**)
- A/D conversion time (**A/D Converter Characteristics**)
- Number of rewrites per chip (**Flash Memory Programming Characteristics**)

Cautions 1. The μPD78F05xxD and 78F05xxDA have an on-chip debug function, which is provided for development and evaluation. Do not use the on-chip debug function in products designated for mass production, because the guaranteed number of rewritable times of the flash memory may be exceeded when this function is used, and product reliability therefore cannot be guaranteed. Renesas Electronics is not liable for problems occurring when the on-chip debug function is used.

2. The pins mounted depend on the product as follows.

(1) Port functions

Port	78K0/KB2	78K0/KC2			78K0/KD2	78K0/KE2	78K0/KF2
	30/36 Pins	38 Pins	44 Pins	48 Pins	52 Pins	64 Pins	80 Pins
Port 0	P00, P01				P00 to P03	P00 to P06	
Port 1	P10 to P17						
Port 2	P20 to P23	P20 to P25	P20 to P27				
Port 3	P30 to P33						
Port 4	–		P40, P41			P40 to P43	P40 to P47
Port 5	–					P50 to P53	P50 to P57
Port 6	P60, P61	P60 to P63					P60 to P67
Port 7	–	P70, P71	P70 to P73	P70 to P75	P70 to P77		
Port 12	P120 to P122	P120 to P124					
Port 13	–			P130			
Port 14	–			P140		P140, P141	P140 to P145

(The remaining table is on the next page.)

(2) Non-port functions

Port		78K0/KB2	78K0/KC2			78K0/KD2	78K0/KE2	78K0/KF2
		30/36 Pins	38 Pins	44 Pins	48 Pins	52 Pins	64 Pins	80 Pins
Power supply, ground		V_{DD}, EV_{DD}[Note 1], V_{SS}, EV_{SS}[Note 1], AV_{REF}, AV_{SS}	V_{DD}, AV_{REF}, V_{SS}, AV_{SS}				V_{DD}, EV_{DD}, V_{SS}, EV_{SS}, AV_{REF}, AV_{SS}	
Regulator		REGC						
Reset		$\overline{\text{RESET}}$						
Clock oscillation		X1, X2, EXCLK	X1, X2, XT1, XT2, EXCLK, EXCLKS					
Writing to flash memory		FLMD0						
Interrupt		INTP0 to INTP5			INTP0 to INTP6		INTP0 to INTP7	
Key interrupt		–	KR0, KR1	KR0 to KR3		KR0 to KR7		
Timer	TM00	TI000, TI010, TO00						
	TM01	–					TI001[Note 2], TI011[Note 2], TO01[Note 2]	
	TM50	TI50, TO50						
	TM51	TI51, TO51						
	TMH0	TOH0						
	TMH1	TOH1						
Serial interface	UART0	RxD0, TxD0						
	UART6	RxD6, TxD6						
	IIC0	SCL0, SDA0	SCL0, SDA0, EXSCL0					
	CSI10	$\overline{\text{SCK10}}$, SI10, SO10						
	CSI11	–					$\overline{\text{SCK11}}$[Note 2], SI11[Note 2], SO11[Note 2], $\overline{\text{SSI11}}$[Note 2]	
	CSIA0	–						$\overline{\text{SCKA0}}$, SIA0, SOA0, BUSY0, STB0
A/D converter		ANI0 to ANI3	ANI0 to ANI5	ANI0 to ANI7				
Clock output		–			PCL			
Buzzer output		–					BUZ	
Low-voltage detector (LVI)		EXLVI						
On-chip debug function		OCD0A, OCD1A, OCD0B, OCD1B (mounted only onto μPD78F05xxD and 78F05xxDA (products with on-chip debug function))						

Notes 1. This is not mounted onto 30-pin products.

2. This is not mounted onto the 78K0/KE2 products whose flash memory is less than 32 KB.

Caution The pins mounted depend on the product. Refer to Caution 2 at the beginning of this chapter.

Absolute Maximum Ratings (T_A = 25°C) (1/2)

Parameter	Symbol	Conditions	Ratings	Unit
Supply voltage	V_{DD}		−0.5 to +6.5	V
	EV_{DD}		−0.5 to +6.5	V
	V_{SS}		−0.5 to +0.3	V
	EV_{SS}		−0.5 to +0.3	V
	AV_{REF}		−0.5 to V_{DD} + 0.3[Note]	V
	AV_{SS}		−0.5 to +0.3	V
REGC pin input voltage	V_{IREGC}		−0.5 to +3.6 and −0.5 to V_{DD}	V
Input voltage	V_{I1}	P00 to P06, P10 to P17, P20 to P27, P30 to P33, P40 to P47, P50 to P57, P64 to P67, P70 to P77, P120 to P124, P140 to P145, X1, X2, XT1, XT2, $\overline{\text{RESET}}$, FLMD0	−0.3 to V_{DD} + 0.3[Note]	V
	V_{I2}	P60 to P63 (N-ch open drain)	−0.3 to +6.5	V
Output voltage	V_O		−0.3 to V_{DD} + 0.3[Note]	V
Analog input voltage	V_{AN}	ANI0 to ANI7	−0.3 to AV_{REF} + 0.3[Note] and −0.3 to V_{DD} + 0.3[Note]	V

Note Must be 6.5 V or lower.

Caution Product quality may suffer if the absolute maximum rating is exceeded even momentarily for any parameter. That is, the absolute maximum ratings are rated values at which the product is on the verge of suffering physical damage, and therefore the product must be used under conditions that ensure that the absolute maximum ratings are not exceeded.

Remark Unless specified otherwise, the characteristics of alternate-function pins are the same as those of port pins.

Caution The pins mounted depend on the product. Refer to Caution 2 at the beginning of this chapter.

Absolute Maximum Ratings (T_A = 25°C) (2/2)

Parameter	Symbol	Conditions		Ratings	Unit
Output current, high	I_{OH}	Per pin	P00 to P06, P10 to P17, P30 to P33, P40 to P47, P50 to P57, P64 to P67, P70 to P77, P120, P130, P140 to P145	−10	mA
		Total of all pins −80 mA	P00 to P04, P40 to P47, P120, P130, P140 to P145	−25	mA
			P05, P06, P10 to P17, P30 to P33, P50 to P57, P64 to P67, P70 to P77	−55	mA
		Per pin	P20 to P27	−0.5	mA
		Total of all pins		−2	mA
		Per pin	P121 to P124	−1	mA
		Total of all pins		−4	mA
Output current, low	I_{OL}	Per pin	P00 to P06, P10 to P17, P30 to P33, P40 to P47, P50 to P57, P60 to P67, P70 to P77, P120, P130, P140 to P145	30	mA
		Total of all pins 200 mA	P00 to P04, P40 to P47, P120, P130, P140 to P145	60	mA
			P05, P06, P10 to P17, P30 to P33, P50 to P57, P60 to P67, P70 to P77	140	mA
		Per pin	P20 to P27	1	mA
		Total of all pins		5	mA
		Per pin	P121 to P124	4	mA
		Total of all pins		10	mA
Operating ambient temperature	T_A			−40 to +85	°C
Storage temperature	T_{stg}			−65 to +150	°C

Cautions 1. Product quality may suffer if the absolute maximum rating is exceeded even momentarily for any parameter. That is, the absolute maximum ratings are rated values at which the product is on the verge of suffering physical damage, and therefore the product must be used under conditions that ensure that the absolute maximum ratings are not exceeded.

2. The value of the current that can be run per pin must satisfy the value of the current per pin and the total value of the currents of all pins.

Remark Unless specified otherwise, the characteristics of alternate-function pins are the same as those of port pins.

Caution The pins mounted depend on the product. Refer to Caution 2 at the beginning of this chapter.

X1 Oscillator Characteristics

(T_A = –40 to +85°C, 1.8 V ≤ V_{DD} = EV_{DD} ≤ 5.5 V, V_{SS} = EV_{SS} = AV_{SS} = 0 V)

Resonator	Recommended Circuit	Parameter	Conditions		MIN.	TYP.	MAX.	Unit
Ceramic resonator, Crystal resonator	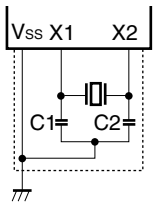	X1 clock oscillation frequency (f_X)Note 1	Conventional-specification Products (μPD78F05xx, 78F05xxD)	4.0 V ≤ V_{DD} ≤ 5.5 V	1.0Note 2		20.0	MHz
				2.7 V ≤ V_{DD} < 4.0 V	1.0Note 2		10.0	
				1.8 V ≤ V_{DD} < 2.7 V	1.0		5.0	
			Expanded-specification Products (μPD78F05xxA, 78F05xxDA)	2.7 V ≤ V_{DD} ≤ 5.5 V	1.0Note 2		20.0	
				1.8 V ≤ V_{DD} < 2.7 V	1.0		5.0	

Notes 1. Indicates only oscillator characteristics. Refer to **AC Characteristics** for instruction execution time.

2. It is 2.0 MHz (MIN.) when programming on the board via UART6.

Cautions 1. When using the X1 oscillator, wire as follows in the area enclosed by the broken lines in the above figures to avoid an adverse effect from wiring capacitance.

- **Keep the wiring length as short as possible.**
- **Do not cross the wiring with the other signal lines.**
- **Do not route the wiring near a signal line through which a high fluctuating current flows.**
- **Always make the ground point of the oscillator capacitor the same potential as V_{SS}.**
- **Do not ground the capacitor to a ground pattern through which a high current flows.**
- **Do not fetch signals from the oscillator.**

2. Since the CPU is started by the internal high-speed oscillation clock after a reset release, check the X1 clock oscillation stabilization time using the oscillation stabilization time counter status register (OSTC) by the user. Determine the oscillation stabilization time of the OSTC register and oscillation stabilization time select register (OSTS) after sufficiently evaluating the oscillation stabilization time with the resonator to be used.

Caution The pins mounted depend on the product. Refer to Caution 2 at the beginning of this chapter.

Internal Oscillator Characteristics

(T_A = –40 to +85°C, 1.8 V ≤ V_{DD} = EV_{DD} ≤ 5.5 V, V_{SS} = EV_{SS} = AV_{SS} = 0 V)

Resonator	Parameter	Conditions		MIN.	TYP.	MAX.	Unit
8 MHz internal oscillator	Internal high-speed oscillation clock frequency (f_{RH})[Note]	RSTS = 1	2.7 V ≤ V_{DD} ≤ 5.5 V	7.6	8.0	8.4	MHz
			1.8 V ≤ V_{DD} < 2.7 V	7.6	8.0	10.4	MHz
		RSTS = 0		2.48	5.6	9.86	MHz
240 kHz internal oscillator	Internal low-speed oscillation clock frequency (f_{RL})	2.7 V ≤ V_{DD} ≤ 5.5 V		216	240	264	kHz
		1.8 V ≤ V_{DD} < 2.7 V		192	240	264	kHz

Note Indicates only oscillator characteristics. Refer to **AC Characteristics** for instruction execution time.

Remark RSTS: Bit 7 of the internal oscillation mode register (RCM)

XT1 Oscillator Characteristics[Note 1]

(T_A = –40 to +85°C, 1.8 V ≤ V_{DD} = EV_{DD} ≤ 5.5 V, V_{SS} = EV_{SS} = AV_{SS} = 0 V)

Resonator	Recommended Circuit	Parameter	Conditions	MIN.	TYP.	MAX.	Unit
Crystal resonator	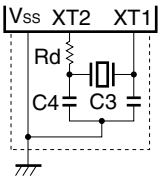	XT1 clock oscillation frequency (f_{XT})[Note 2]		32	32.768	35	kHz

Notes 1. The 78K0/KB2 is not provided with the XT1 oscillator.

2. Indicates only oscillator characteristics. Refer to **AC Characteristics** for instruction execution time.

Cautions 1. When using the XT1 oscillator, wire as follows in the area enclosed by the broken lines in the above figure to avoid an adverse effect from wiring capacitance.

- **Keep the wiring length as short as possible.**
- **Do not cross the wiring with the other signal lines.**
- **Do not route the wiring near a signal line through which a high fluctuating current flows.**
- **Always make the ground point of the oscillator capacitor the same potential as V_{SS}.**
- **Do not ground the capacitor to a ground pattern through which a high current flows.**
- **Do not fetch signals from the oscillator.**

2. The XT1 oscillator is designed as a low-amplitude circuit for reducing power consumption, and is more prone to malfunction due to noise than the X1 oscillator. Particular care is therefore required with the wiring method when the XT1 clock is used.

Recommended Oscillator Constants (1/2)

(1) X1 oscillation: Ceramic resonator (T_A = –40 to +85°C) (1/2)

Manufacturer	Part Number	SMD/ Lead	Frequency (MHz)	Recommended Circuit Constants		Oscillation Voltage Range	
				C1 (pF)	C2 (pF)	MIN. (V)	MAX. (V)
Murata Mfg. Co., Ltd.	CSTCC2M00G56-R0	SMD	2.00	Internal (47)	Internal (47)	1.8	5.5
	CSTLS4M00G56-B0	Lead	4.00	Internal (47)	Internal (47)		
	CSTCR4M00G55-R0	SMD		Internal (39)	Internal (39)		
	CSTLS4M19G56-B0	Lead	4.194	Internal (47)	Internal (47)		
	CSTCR4M19G55-R0	SMD		Internal (39)	Internal (39)		
	CSTLS4M91G56-B0	Lead	4.915	Internal (47)	Internal (47)		
	CSTCR4M91G55-R0	SMD		Internal (39)	Internal (39)		
	CSTLS5M00G56-B0	Lead	5.00	Internal (47)	Internal (47)	1.9	
	CSTCR5M00G55-R0	SMD		Internal (39)	Internal (39)	1.8	
	CSTLS6M00G56-B0	Lead	6.00	Internal (47)	Internal (47)	2.4	
	CSTCR6M00G55-R0	SMD		Internal (39)	Internal (39)	1.8	
	CSTLS8M00G56-B0	Lead	8.00	Internal (47)	Internal (47)	2.3	
	CSTCE8M00G55-R0	SMD		Internal (33)	Internal (33)	1.9	
	CSTLS8M38G56-B0	Lead	8.388	Internal (47)	Internal (47)	2.3	
	CSTCE8M38G55-R0	SMD		Internal (33)	Internal (33)	1.9	
	CSTLS10M0G56-B0	Lead	10.0	Internal (47)	Internal (47)	2.5	
	CSTCE10M0G55-R0	SMD		Internal (33)	Internal (33)	2.3	
	CSTCE12M0G55-R0	SMD	12.0	Internal (33)	Internal (33)	2.3	
	CSTCE16M0V53-R0	SMD	16.0	Internal (15)	Internal (15)	2.3	
	CSTCE20M0V53-R0	SMD	20.0	Internal (15)	Internal (15)	2.6	
Murata Mfg. Co., Ltd. (low-capacitance products)	CSTLS6M00G53-B0	Lead	6.00	Internal (15)	Internal (15)	1.8	5.5
	CSTLS8M00G53-B0	Lead	8.00	Internal (15)	Internal (15)	1.8	
	CSTLS8M38G53-B0	Lead	8.388	Internal (15)	Internal (15)	1.8	
	CSTLS10M0G53-B0	Lead	10.0	Internal (15)	Internal (15)	1.8	
	CSTCE12M0G52-R0	SMD	12.0	Internal (10)	Internal (10)	1.8	
	CSTCE16M0V51-R0	SMD	16.0	Internal (5)	Internal (5)	1.8	
	CSTCE20M0V51-R0	SMD	20.0	Internal (5)	Internal (5)	1.9	

Caution The oscillator constants shown above are reference values based on evaluation in a specific environment by the resonator manufacturer. If it is necessary to optimize the oscillator characteristics in the actual application, apply to the resonator manufacturer for evaluation on the implementation circuit. The oscillation voltage and oscillation frequency only indicate the oscillator characteristic. Use the 78K0/Kx2 so that the internal operation conditions are within the specifications of the DC and AC characteristics.

Recommended Oscillator Constants (2/2)

(1) X1 oscillation: Ceramic resonator (T_A = –40 to +85°C) (2/2)

Manufacturer	Part Number	SMD/ Lead	Frequency (MHz)	Recommended Circuit Constants		Oscillation Voltage Range	
				C1 (pF)	C2 (pF)	MIN. (V)	MAX. (V)
TDK Corporation	CCR4.0MUC8	SMD	4.00	Internal (27)	Internal (27)	1.8	5.5
	FCR4.0MC5	Lead		Internal (30)	Internal (30)		
	CCR8.0MXC8	SMD	8.00	Internal (18)	Internal (30)		
	FCR8.0MC5	Lead		Internal (20)	Internal (20)		

Caution The oscillator constants shown above are reference values based on evaluation in a specific environment by the resonator manufacturer. If it is necessary to optimize the oscillator characteristics in the actual application, apply to the resonator manufacturer for evaluation on the implementation circuit. The oscillation voltage and oscillation frequency only indicate the oscillator characteristic. Use the 78K0/Kx2 so that the internal operation conditions are within the specifications of the DC and AC characteristics.

(2) XT1 oscillation: Crystal resonator (T_A = –40 to +85°C)

Manufacturer	Part Number	SMD/ Lead	Frequency (MHz)	Load Capacitance CL (pF)	Recommended Circuit Constants						Oscillation Voltage Range	
					V_{DD} = 3.3 V			V_{DD} = 5.0 V			MIN. (V)	MAX. (V)
					C3 (pF)	C4 (pF)	Rd (kΩ)	C3 (pF)	C4 (pF)	Rd (kΩ)		
Seiko Instruments Inc.	VT-200	Lead	32.768	6.0	4	3	100	6	5	100	1.8	5.5
				12.5	15	15	100	18	15	100		

Caution The oscillator constants shown above are reference values based on evaluation in a specific environment by the resonator manufacturer. If it is necessary to optimize the oscillator characteristics in the actual application, apply to the resonator manufacturer for evaluation on the implementation circuit. The oscillation voltage and oscillation frequency only indicate the oscillator characteristic. Use the 78K0/KE2 so that the internal operation conditions are within the specifications of the DC and AC characteristics.

Caution The pins mounted depend on the product. Refer to Caution 2 at the beginning of this chapter.

DC Characteristics (1/4)

(T_A = –40 to +85°C, 1.8 V ≤ V_{DD} = EV_{DD} ≤ 5.5 V, AV_{REF} ≤ V_{DD}, V_{SS} = EV_{SS} = AV_{SS} = 0 V)

Parameter	Symbol	Conditions		MIN.	TYP.	MAX.	Unit
Output current, high[Note 1]	I_{OH1}	Per pin for P00 to P06, P10 to P17, P30 to P33, P40 to P47, P50 to P57, P64 to P67, P70 to P77, P120, P130, P140 to P145	4.0 V ≤ V_{DD} ≤ 5.5 V			–3.0	mA
			2.7 V ≤ V_{DD} < 4.0 V			–2.5	mA
			1.8 V ≤ V_{DD} < 2.7 V			–1.0	mA
		Total of P00 to P04, P40 to P47, P120, P130, P140 to P145[Note 3]	4.0 V ≤ V_{DD} ≤ 5.5 V			–20.0	mA
			2.7 V ≤ V_{DD} < 4.0 V			–10.0	mA
			1.8 V ≤ V_{DD} < 2.7 V			–5.0	mA
		Total of P05, P06, P10 to P17, P30 to P33, P50 to P57, P64 to P67, P70 to P77[Note 3]	4.0 V ≤ V_{DD} ≤ 5.5 V			–30.0	mA
			2.7 V ≤ V_{DD} < 4.0 V			–19.0	mA
			1.8 V ≤ V_{DD} < 2.7 V			–10.0	mA
		Total of all the pins above[Note 3]	4.0 V ≤ V_{DD} ≤ 5.5 V			–50.0	mA
			2.7 V ≤ V_{DD} < 4.0 V			–29.0	mA
			1.8 V ≤ V_{DD} < 2.7 V			–15.0	mA
	I_{OH2}	Per pin for P20 to P27	AV_{REF} = V_{DD}			–0.1	mA
		Per pin for P121 to P124				–0.1	mA
Output current, low[Note 2]	I_{OL1}	Per pin for P00 to P06, P10 to P17, P30 to P33, P40 to P47, P50 to P57, P64 to P67, P70 to P77, P120, P130, P140 to P145	4.0 V ≤ V_{DD} ≤ 5.5 V			8.5	mA
			2.7 V ≤ V_{DD} < 4.0 V			5.0	mA
			1.8 V ≤ V_{DD} < 2.7 V			2.0	mA
		Per pin for P60 to P63	4.0 V ≤ V_{DD} ≤ 5.5 V			15.0	mA
			2.7 V ≤ V_{DD} < 4.0 V			5.0	mA
			1.8 V ≤ V_{DD} < 2.7 V			2.0	mA
		Total of P00 to P04, P40 to P47, P120, P130, P140 to P145[Note 3]	4.0 V ≤ V_{DD} ≤ 5.5 V			20.0	mA
			2.7 V ≤ V_{DD} < 4.0 V			15.0	mA
			1.8 V ≤ V_{DD} < 2.7 V			9.0	mA
		Total of P05, P06, P10 to P17, P30 to P33, P50 to P57, P60 to P67, P70 to P77[Note 3]	4.0 V ≤ V_{DD} ≤ 5.5 V			45.0	mA
			2.7 V ≤ V_{DD} < 4.0 V			35.0	mA
			1.8 V ≤ V_{DD} < 2.7 V			20.0	mA
		Total of all the pins above[Note 3]	4.0 V ≤ V_{DD} ≤ 5.5 V			65.0	mA
			2.7 V ≤ V_{DD} < 4.0 V			50.0	mA
			1.8 V ≤ V_{DD} < 2.7 V			29.0	mA
	I_{OL2}	Per pin for P20 to P27	AV_{REF} = V_{DD}			0.4	mA
		Per pin for P121 to P124				0.4	mA

Notes 1. Value of current at which the device operation is guaranteed even if the current flows from V_{DD} to an output pin.

2. Value of current at which the device operation is guaranteed even if the current flows from an output pin to GND.

3. Specification under conditions where the duty factor is 70% (time for which current is output is 0.7 × t and time for which current is not output is 0.3 × t, where t is a specific time). The total output current of the pins at a duty factor of other than 70% can be calculated by the following expression.

- Where the duty factor of I_{OH} is n%: Total output current of pins = (I_{OH} × 0.7)/(n × 0.01)

<Example> Where the duty factor is 50%, I_{OH} = –20.0 mA

Total output current of pins = (–20.0 × 0.7)/(50 × 0.01) = –28.0 mA

However, the current that is allowed to flow into one pin does not vary depending on the duty factor. A current higher than the absolute maximum rating must not flow into one pin.

Remark Unless specified otherwise, the characteristics of alternate-function pins are the same as those of port pins.

Caution The pins mounted depend on the product. Refer to Caution 2 at the beginning of this chapter.

DC Characteristics (2/4)

(T_A = –40 to +85°C, 1.8 V ≤ V_{DD} = EV_{DD} ≤ 5.5 V, AV_{REF} ≤ V_{DD}, V_{SS} = EV_{SS} = AV_{SS} = 0 V)

Parameter	Symbol	Conditions		MIN.	TYP.	MAX.	Unit
Input voltage, high (products whose flash memory is at least 48 KB)[Note 1]	V_{IH1}	P02, P12, P13, P15, P40 to P47, P50 to P57, P64 to P67, P121 to P124, P144, P145, EXCLK, EXCLKS		0.7V_{DD}		V_{DD}	V
	V_{IH2}	P00, P01, P03 to P06, P10, P11, P14, P16, P17, P30 to P33, P70 to P77, P120, P140 to P143, $\overline{RESET}$		0.8V_{DD}		V_{DD}	V
	V_{IH3}	P20 to P27	AV_{REF} = V_{DD}	0.7AV_{REF}		AV_{REF}	V
	V_{IH4}	P60 to P63		0.7V_{DD}		6.0	V
Input voltage, high (products whose flash memory is less than 32 KB)[Note 2]	V_{IH1}	P02 to P06, P12, P13, P15, P40 to P43, P50 to P53, P121 to P124, EXCLK, EXCLKS		0.7V_{DD}		V_{DD}	V
	V_{IH2}	P00, P01, P10, P11, P14, P16, P17, P30 to P33, P70 to P77, P120, P140, P141, $\overline{RESET}$		0.8V_{DD}		V_{DD}	V
	V_{IH3}	P20 to P27	AV_{REF} = V_{DD}	0.7AV_{REF}		AV_{REF}	V
	V_{IH4}	P60 to P63		0.7V_{DD}		6.0	V
Input voltage, low (products whose flash memory is at least 48 KB)[Note 1]	V_{IL1}	P02, P12, P13, P15, P40 to P47, P50 to P57, P60 to P67, P121 to P124, P144, P145, EXCLK, EXCLKS		0		0.3V_{DD}	V
	V_{IL2}	P00, P01, P03 to P06, P10, P11, P14, P16, P17, P30 to P33, P70 to P77, P120, P140 to P143, $\overline{RESET}$		0		0.2V_{DD}	V
	V_{IL3}	P20 to P27	AV_{REF} = V_{DD}	0		0.3AV_{REF}	V
Input voltage, low (products whose flash memory is less than 32 KB)[Note 2]	V_{IL1}	P02 to P06, P12, P13, P15, P40 to P43, P50 to P53, P60 to P63, P121 to P124, EXCLK, EXCLKS		0		0.3V_{DD}	V
	V_{IL2}	P00, P01, P10, P11, P14, P16, P17, P30 to P33, P70 to P77, P120, P140, P141, $\overline{RESET}$		0		0.2V_{DD}	V
	V_{IL3}	P20 to P27	AV_{REF} = V_{DD}	0		0.3AV_{REF}	V
Output voltage, high	V_{OH1}	P00 to P06, P10 to P17, P30 to P33, P40 to P47, P50 to P57, P64 to P67, P70 to P77, P120, P130, P140 to P145	4.0 V ≤ V_{DD} ≤ 5.5 V, I_{OH1} = –3.0 mA	V_{DD} – 0.7			V
			2.7 V ≤ V_{DD} < 4.0 V, I_{OH1} = –2.5 mA	V_{DD} – 0.5			V
			1.8 V ≤ V_{DD} < 2.7 V, I_{OH1} = –1.0 mA	V_{DD} – 0.5			V
	V_{OH2}	P20 to P27	AV_{REF} = V_{DD}, I_{OH2} = –100 μA	V_{DD} – 0.5			V
		P121 to P124	I_{OH2} = –100 μA	V_{DD} – 0.5			V

Notes 1. Supported products: 78K0/KD2 and 78K0/KE2 whose flash memory is at least 48 KB, and 78K0/KF2

2. Supported products: 78K0/KD2 and 78K0/KE2 whose flash memory is less than 32 KB, 78K0/KB2, and 78K0/KC2

Remark Unless specified otherwise, the characteristics of alternate-function pins are the same as those of port pins.

Caution The pins mounted depend on the product. Refer to Caution 2 at the beginning of this chapter.

DC Characteristics (3/4)

(T_A = –40 to +85°C, 1.8 V ≤ V_{DD} = EV_{DD} ≤ 5.5 V, AV_{REF} ≤ V_{DD}, V_{SS} = EV_{SS} = AV_{SS} = 0 V)

Parameter	Symbol	Conditions			MIN.	TYP.	MAX.	Unit
Output voltage, low	V_{OL1}	P00 to P06, P10 to P17, P30 to P33, P40 to P47, P50 to P57, P64 to P67, P70 to P77, P120, P130, P140 to P145	4.0 V ≤ V_{DD} ≤ 5.5 V, I_{OL1} = 8.5 mA				0.7	V
			2.7 V ≤ V_{DD} < 4.0 V, I_{OL1} = 5.0 mA				0.7	V
			1.8 V ≤ V_{DD} < 2.7 V, I_{OH1} = 2.0 mA				0.5	V
			1.8 V ≤ V_{DD} < 2.7 V, I_{OL1} = 0.5 mA				0.4	V
	V_{OL2}	P20 to P27	AV_{REF} = V_{DD}, I_{OL2} = 0.4 mA				0.4	V
		P121 to P124	I_{OL2} = 0.4 mA				0.4	V
	V_{OL3}	P60 to P63	4.0 V ≤ V_{DD} ≤ 5.5 V, I_{OL1} = 15.0 mA				2.0	V
			4.0 V ≤ V_{DD} ≤ 5.5 V, I_{OL1} = 5.0 mA				0.4	V
			2.7 V ≤ V_{DD} < 4.0 V, I_{OL1} = 5.0 mA				0.6	V
			2.7 V ≤ V_{DD} < 4.0 V, I_{OL1} = 3.0 mA				0.4	V
			1.8 V ≤ V_{DD} < 2.7 V, I_{OL1} = 2.0 mA				0.4	V
Input leakage current, high	I_{LIH1}	P00 to P06, P10 to P17, P30 to P33, P40 to P47, P50 to P57, P60 to P67, P70 to P77, P120, P140 to P145, FLMD0, $\overline{\text{RESET}}$	V_I = V_{DD}				1	μA
	I_{LIH2}	P20 to P27	V_I = AV_{REF} = V_{DD}				1	μA
	I_{LIH3}	P121 to 124 (X1, X2, XT1, XT2)	V_I = V_{DD}	I/O port mode			1	μA
				OSC mode			20	μA
Input leakage current, low	I_{LIL1}	P00 to P06, P10 to P17, P30 to P33, P40 to P47, P50 to P57, P60 to P67, P70 to P77, P120, P140 to P145, FLMD0, $\overline{\text{RESET}}$	V_I = V_{SS}				–1	μA
	I_{LIL2}	P20 to P27	V_I = V_{SS}, AV_{REF} = V_{DD}				–1	μA
	I_{LIL3}	P121 to 124 (X1, X2, XT1, XT2)	V_I = V_{SS}	I/O port mode			–1	μA
				OSC mode			–20	μA
Pull-up resistor	R_U	V_I = V_{SS}			10	20	100	kΩ
FLMD0 supply voltage	V_{IL}	In normal operation mode			0		0.2V_{DD}	V
	V_{IH}	In self-programming mode			0.8V_{DD}		V_{DD}	V

Remark Unless specified otherwise, the characteristics of alternate-function pins are the same as those of port pins.

Caution The pins mounted depend on the product. Refer to Caution 2 at the beginning of this chapter.

DC Characteristics (4/4)

(T_A = −40 to +85°C, 1.8 V ≤ V_{DD} = EV_{DD} ≤ 5.5 V, AV_{REF} ≤ V_{DD}, V_{SS} = EV_{SS} = AV_{SS} = 0 V)

Parameter	Symbol	Conditions			MIN.	TYP.	MAX.	Unit
Supply current[Note 1]	I_{DD1}	Operating mode	f_{XH} = 20 MHz, V_{DD} = 5.0 V [Note 2]	Square wave input		3.2	5.5	mA
				Resonator connection		4.5	6.9	mA
			f_{XH} = 10 MHz, V_{DD} = 5.0 V [Notes 2, 3]	Square wave input		1.6	2.8	mA
				Resonator connection		2.3	3.9	mA
			f_{XH} = 10 MHz, V_{DD} = 3.0 V [Notes 2, 3]	Square wave input		1.5	2.7	mA
				Resonator connection		2.2	3.2	mA
			f_{XH} = 5 MHz, V_{DD} = 3.0 V [Notes 2, 3]	Square wave input		0.9	1.6	mA
				Resonator connection		1.3	2.0	mA
			f_{XH} = 5 MHz, V_{DD} = 2.0 V [Notes 2, 3]	Square wave input		0.7	1.4	mA
				Resonator connection		1.0	1.6	mA
			f_{RH} = 8 MHz, V_{DD} = 5.0 V [Note 4]			1.4	2.5	mA
			f_{SUB} = 32.768 kHz, V_{DD} = 5.0 V [Note 5]	Square wave input		6	25	μA
				Resonator connection		15	30	μA
	I_{DD2}	HALT mode	f_{XH} = 20 MHz, V_{DD} = 5.0 V [Note 2]	Square wave input		0.8	2.6	mA
				Resonator connection		2.0	4.4	mA
			f_{XH} = 10 MHz, V_{DD} = 5.0 V [Notes 2, 3]	Square wave input		0.4	1.3	mA
				Resonator connection		1.0	2.4	mA
			f_{XH} = 5 MHz, V_{DD} = 3.0 V [Notes 2, 3]	Square wave input		0.2	0.65	mA
				Resonator connection		0.5	1.1	mA
			f_{RH} = 8 MHz, V_{DD} = 5.0 V [Note 4]			0.4	1.2	mA
			f_{SUB} = 32.768 kHz, V_{DD} = 5.0 V [Note 5]	Square wave input		3.0	22	μA
				Resonator connection		12	25	μA
	I_{DD3}[Note 6]	STOP mode				1	20	μA
			T_A = −40 to +70 °C			1	10	μA
A/D converter operating current	I_{ADC}[Note 7]	2.3 V ≤ AV_{REF} ≤ V_{DD}, ADCS = 1				0.86	1.9	mA
Watchdog timer operating current	I_{WDT}[Note 8]	During 240 kHz internal low-speed oscillation clock operation				5	10	μA
LVI operating current	I_{LVI}[Note 9]					9	18	μA

Remarks 1. f_{XH}: High-speed system clock frequency (X1 clock oscillation frequency or external main system clock frequency)

2. f_{RH}: Internal high-speed oscillation clock frequency

3. f_{SUB}: Subsystem clock frequency (XT1 clock oscillation frequency or external subsystem clock frequency)

(Notes on next page)

Notes 1. Total current flowing into the internal power supply (V_{DD}, EV_{DD}), including the peripheral operation current and the input leakage current flowing when the level of the input pin is fixed to V_{DD} or V_{SS}. However, the current flowing into the pull-up resistors and the output current of the port are not included.

2. Not including the operating current of the 8 MHz internal oscillator, 240 kHz internal oscillator, and XT1 oscillator, and the current flowing into the A/D converter, watchdog timer and LVI circuit.

3. When AMPH (bit 0 of clock operation mode select register (OSCCTL)) = 0.

4. Not including the operating current of the X1 oscillator, XT1 oscillator, and 240 kHz internal oscillator, and the current flowing into the A/D converter, watchdog timer and LVI circuit.

5. Not including the operating current of the X1 oscillator, 8 MHz internal oscillator, and 240 kHz internal oscillator, and the current flowing into the A/D converter, watchdog timer and LVI circuit.

6. Not including the operating current of the 240 kHz internal oscillator and XT1 oscillation, and the current flowing into the A/D converter, watchdog timer and LVI circuit.

7. Current flowing only to the A/D converter (AV_{REF}). The current value of the 78K0/Kx2 microcontrollers is the sum of I_{DD1} or I_{DD2} and I_{ADC} when the A/D converter operates in an operation mode or the HALT mode.

8. Current flowing only to the watchdog timer (including the operating current of the 240 kHz internal oscillator). The current value of the 78K0/Kx2 microcontrollers is the sum of I_{DD1}, I_{DD2} or I_{DD3} and I_{WDT} when the watchdog timer operates.

9. Current flowing only to the LVI circuit. The current value of the 78K0/Kx2 microcontrollers is the sum of I_{DD1}, I_{DD2} or I_{DD3} and I_{LVI} when the LVI circuit operates.

Caution The pins mounted depend on the product. Refer to Caution 2 at the beginning of this chapter.

AC Characteristics

(1) Basic operation (1/2)

(T_A = –40 to +85°C, 1.8 V ≤ V_{DD} = EV_{DD} ≤ 5.5 V, AV_{REF} ≤ V_{DD}, V_{SS} = EV_{SS} = AV_{SS} = 0 V)

Parameter	Symbol	Conditions			MIN.	TYP.	MAX.	Unit
Instruction cycle (minimum instruction execution time)	T_{CY}	Main system clock (f_{XP}) operation	Conventional-specification Products (μPD78F05xx, 78F05xxD)	4.0 V ≤ V_{DD} ≤ 5.5 V	0.1		32	μs
				2.7 V ≤ V_{DD} < 4.0 V	0.2		32	μs
				1.8 V ≤ V_{DD} < 2.7 V	0.4 Note 1		32	μs
			Expanded-specification Products (μPD78F05xxA, 78F05xxDA)	2.7 V ≤ V_{DD} ≤ 5.5 V	0.1		32	μs
				1.8 V ≤ V_{DD} < 2.7 V	0.4 Note 1		32	μs
		Subsystem clock (f_{SUB}) operation Note 2			114	122	125	μs
Peripheral hardware clock frequency	f_{PRS}	f_{PRS} = f_{XH} (XSEL = 1)	Conventional-specification Products (μPD78F05xx, 78F05xxD)	4.0 V ≤ V_{DD} ≤ 5.5 V			20	MHz
				2.7 V ≤ V_{DD} < 4.0 V			10	MHz
				1.8 V ≤ V_{DD} < 2.7 V			5	MHz
			Expanded-specification Products (μPD78F05xxA, 78F05xxDA)	4.0 V ≤ V_{DD} ≤ 5.5 V			20	MHz
				2.7 V ≤ V_{DD} < 4.0 V Note 3			20	MHz
				1.8 V ≤ V_{DD} < 2.7 V			5	MHz
		f_{PRS} = f_{RH} (XSEL = 0)		2.7 V ≤ V_{DD} ≤ 5.5 V	7.6		8.4	MHz
				1.8 V ≤ V_{DD} < 2.7 V Note 4	7.6		10.4	MHz
External main system clock frequency	f_{EXCLK}	Conventional-specification Products (μPD78F05xx, 78F05xxD)		4.0 V ≤ V_{DD} ≤ 5.5 V	1.0 Note 5		20.0	MHz
				2.7 V ≤ V_{DD} < 4.0 V	1.0 Note 5		10.0	MHz
				1.8 V ≤ V_{DD} < 2.7 V	1.0		5.0	MHz
		Expanded-specification Products (μPD78F05xxA, 78F05xxDA)		2.7 V ≤ V_{DD} ≤ 5.5 V	1.0 Note 5		20.0	MHz
				1.8 V ≤ V_{DD} < 2.7 V	1.0		5.0	MHz
External main system clock input high-level width, low-level width	t_{EXCLKH}, t_{EXCLKL}	Conventional-specification Products (μPD78F05xx, 78F05xxD)		4.0 V ≤ V_{DD} ≤ 5.5 V	24			ns
				2.7 V ≤ V_{DD} < 4.0 V	48			ns
				1.8 V ≤ V_{DD} < 2.7 V	96			ns
		Expanded-specification Products (μPD78F05xxA, 78F05xxDA)		2.7 V ≤ V_{DD} ≤ 5.5 V	24			ns
				1.8 V ≤ V_{DD} < 2.7 V	96			ns

Notes 1. 0.38 μs when operating with the 8 MHz internal oscillator.

2. The 78K0/KB2 is not provided with a subsystem clock.

3. Characteristics of the main system clock frequency. Set the division clock to be set by a peripheral function to f_{XH}/2 (10 MHz) or less. The multiplier/divider, however, can operate on f_{XH} (20 MHz).

4. Characteristics of the main system clock frequency. Set the division clock to be set by a peripheral function to f_{RH}/2 or less.

5. 2.0 MHz (MIN.) when using UART6 during on-board programming.

Caution The pins mounted depend on the product. Refer to Caution 2 at the beginning of this chapter.

(1) Basic operation (2/2)

(T_A = –40 to +85°C, 1.8 V ≤ V_{DD} = EV_{DD} ≤ 5.5 V, AV_{REF} ≤ V_{DD}, V_{SS} = EV_{SS} = AV_{SS} = 0 V)

Parameter	Symbol	Conditions	MIN.	TYP.	MAX.	Unit
External subsystem clock frequency[Note 1]	f_{EXCLKS}		32	32.768	35	kHz
External subsystem clock input high-level width, low-level width[Note 1]	$t_{EXCLKSH}$, $t_{EXCLKSL}$		12			μs
TI000, TI010, TI001, TI011 input high-level width, low-level width	t_{TIH0}, t_{TIL0}	4.0 V ≤ V_{DD} ≤ 5.5 V	$2/f_{sam}$ + 0.1[Note 2]			μs
		2.7 V ≤ V_{DD} < 4.0 V	$2/f_{sam}$ + 0.2[Note 2]			μs
		1.8 V ≤ V_{DD} < 2.7 V	$2/f_{sam}$ + 0.5[Note 2]			μs
TI50, TI51 input frequency	f_{TI5}	4.0 V ≤ V_{DD} ≤ 5.5 V			10	MHz
		2.7 V ≤ V_{DD} < 4.0 V			10	MHz
		1.8 V ≤ V_{DD} < 2.7 V			5	MHz
TI50, TI51 input high-level width, low-level width	t_{TIH5}, t_{TIL5}	4.0 V ≤ V_{DD} ≤ 5.5 V	50			ns
		2.7 V ≤ V_{DD} < 4.0 V	50			ns
		1.8 V ≤ V_{DD} < 2.7 V	100			ns
Interrupt input high-level width, low-level width	t_{INTH}, t_{INTL}		1			μs
Key interrupt input low-level width	t_{KR}		250			ns
$\overline{RESET}$ low-level width	t_{RSL}		10			μs

Notes 1. The 78K0/KB2 is not provided with a subsystem clock.

2. Selection of f_{sam} = f_{PRS}, $f_{PRS}/4$, $f_{PRS}/256$, or f_{PRS}, $f_{PRS}/16$, $f_{PRS}/64$ is possible using bits 0 and 1 (PRM000, PRM001 or PRM010, PRM011) of prescaler mode registers 00 and 01 (PRM00, PRM01). Note that when selecting the TI000 or TI001 valid edge as the count clock, f_{sam} = f_{PRS}.

Caution The pins mounted depend on the product. Refer to Caution 2 at the beginning of this chapter.

T_{CY} vs. V_{DD} (Main System Clock Operation)

<1> Conventional-specification Products (μPD78F05xx, 78F05xxD)

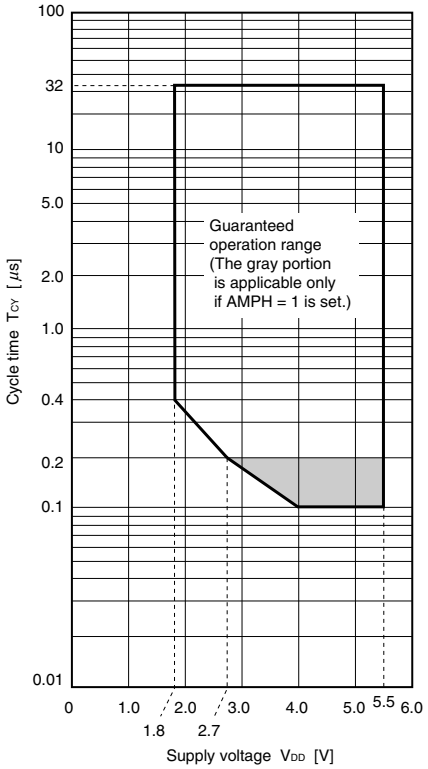

<2> Expanded-specification Products (μPD78F05xxA, 78F05xxDA)

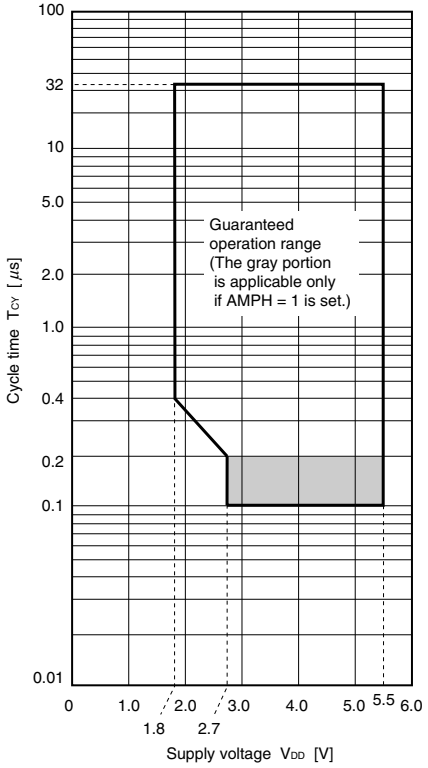

Caution The pins mounted depend on the product. Refer to Caution 2 at the beginning of this chapter.

AC Timing Test Points

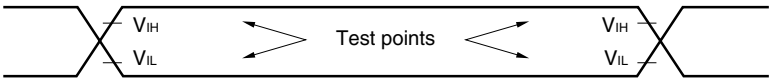

External Main System Clock Timing, External Subsystem Clock Timing

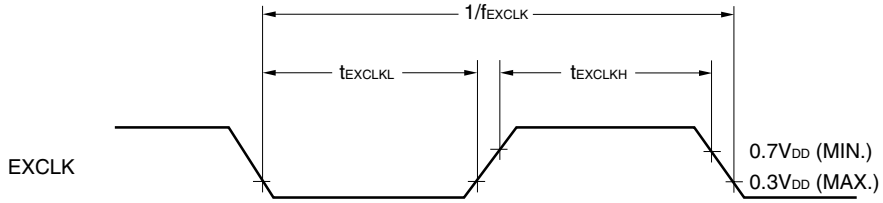

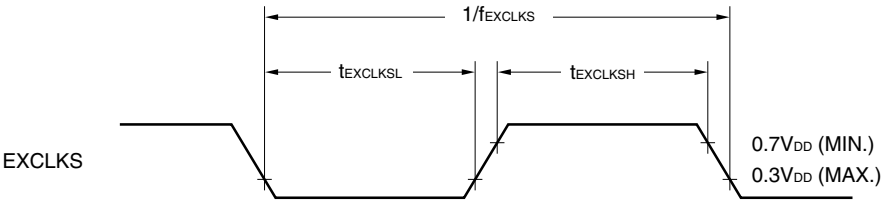

TI Timing

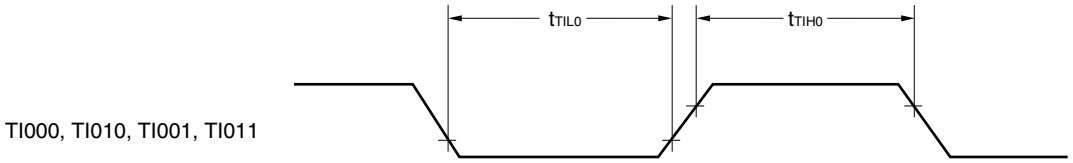

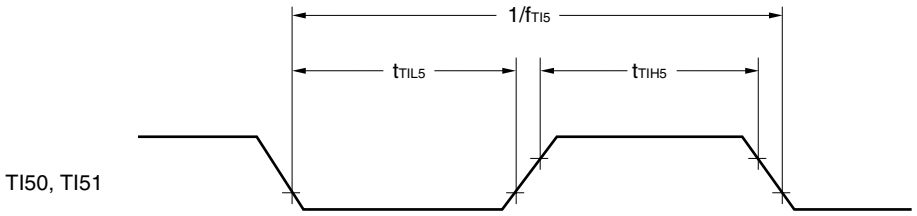

Interrupt Request Input Timing

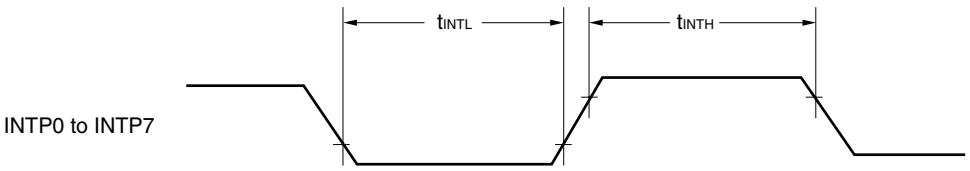

Caution The pins mounted depend on the product. Refer to Caution 2 at the beginning of this chapter.

Key Interrupt Input Timing

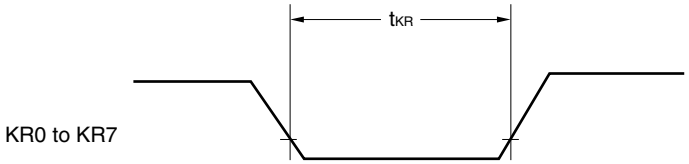

$\overline{\text{RESET}}$ Input Timing

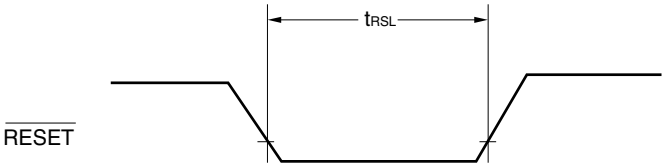

Caution The pins mounted depend on the product. Refer to Caution 2 at the beginning of this chapter.

(2) Serial interface

(T_A = –40 to +85°C, 1.8 V ≤ V_{DD} = EV_{DD} ≤ 5.5 V, AV_{REF} ≤ V_{DD}, V_{SS} = EV_{SS} = AV_{SS} = 0 V)

(a) UART6 (dedicated baud rate generator output)

Parameter	Symbol	Conditions	MIN.	TYP.	MAX.	Unit
Transfer rate					625	kbps

(b) UART0 (dedicated baud rate generator output)

Parameter	Symbol	Conditions	MIN.	TYP.	MAX.	Unit
Transfer rate					625	kbps

(c) IIC0

Parameter	Symbol	Conditions	Standard Mode		High-Speed Mode		Unit
			MIN.	MAX.	MIN.	MAX.	
SCL0 clock frequency	f_{SCL}		0	100	0	400	kHz
Setup time of restart condition	$t_{SU:STA}$		4.7	–	0.6	–	μs
Hold time[Note 1]	$t_{HD:STA}$		4.0	–	0.6	–	μs
Hold time when SCL0 = "L"	t_{LOW}	Internal clock operation	4.7	–	1.3	–	μs
		EXSCL0 clock (6.4 MHz) operation	4.7	–	1.25	–	μs
Hold time when SCL0 = "H"	t_{HIGH}		4.0	–	0.6	–	μs
Data setup time (reception)	$t_{SU:DAT}$		250	–	100	–	ns
Data hold time (transmission)[Note 2]	$t_{HD:DAT}$	$f_W = f_{XH}/2^N$ or $f_W = f_{EXSCL0}$ selected[Note 3]	0	3.45	0	0.9[Note 4]	μs
						1.00[Note 5]	
		$f_W = f_{RH}/2^N$ selected[Note 3]	0	3.45	0	1.05	μs
Setup time of stop condition	$t_{SU:STO}$		4.0	–	0.6	–	μs
Bus free time	t_{BUF}		4.7	–	1.3	–	μs

Notes 1. The first clock pulse is generated after this period when the start/restart condition is detected.

2. The maximum value (MAX.) of $t_{HD:DAT}$ is during normal transfer and a wait state is inserted in the $\overline{ACK}$ (acknowledge) timing.

3. f_W indicates the IIC0 transfer clock selected by the IICCL and IICX0 registers.

4. When $f_W \geq$ 4.4 MHz is selected

5. When $f_W <$ 4.4 MHz is selected

Caution The pins mounted depend on the product. Refer to Caution 2 at the beginning of this chapter.

(d) CSI1n (master mode, $\overline{SCK1n}$... internal clock output)

Parameter	Symbol	Conditions	MIN.	TYP.	MAX.	Unit
$\overline{SCK1n}$ cycle time	t_{KCY1}	4.0 V ≤ V_{DD} ≤ 5.5 V	160			ns
		2.7 V ≤ V_{DD} < 4.0 V	250			ns
		1.8 V ≤ V_{DD} < 2.7 V	500			ns
$\overline{SCK1n}$ high-/low-level width	t_{KH1}, t_{KL1}	4.0 V ≤ V_{DD} ≤ 5.5 V	$t_{KCY1}/2 - 15$ Note 1			ns
		2.7 V ≤ V_{DD} < 4.0 V	$t_{KCY1}/2 - 25$ Note 1			ns
		1.8 V ≤ V_{DD} < 2.7 V	$t_{KCY1}/2 - 50$ Note 1			ns
SI1n setup time (to $\overline{SCK1n}$↑)	t_{SIK1}	4.0 V ≤ V_{DD} ≤ 5.5 V	55			ns
		2.7 V ≤ V_{DD} < 4.0 V	80			ns
		1.8 V ≤ V_{DD} < 2.7 V	170			ns
SI1n hold time (from $\overline{SCK1n}$↑)	t_{KSI1}		30			ns
Delay time from $\overline{SCK1n}$↓ to SO1n output	t_{KSO1}	C = 50 pF Note 2			40	ns

Notes 1. This value is when high-speed system clock (f_{XH}) is used.

2. C is the load capacitance of the $\overline{SCK1n}$ and SO1n output lines.

(e) CSI1n (slave mode, $\overline{SCK1n}$... external clock input)

Parameter	Symbol	Conditions		MIN.	TYP.	MAX.	Unit
$\overline{SCK1n}$ cycle time	t_{KCY2}			400			ns
$\overline{SCK1n}$ high-/low-level width	t_{KH2}, t_{KL2}			$t_{KCY2}/2$			ns
SI1n setup time (to $\overline{SCK1n}$↑)	t_{SIK2}			80			ns
SI1n hold time (from $\overline{SCK1n}$↑)	t_{KSI2}			50			ns
Delay time from $\overline{SCK1n}$↓ to SO1n output	t_{KSO2}	C = 50 pF Note	4.0 V ≤ V_{DD} ≤ 5.5 V			120	ns
			2.7 V ≤ V_{DD} < 4.0 V			120	ns
			1.8 V ≤ V_{DD} < 2.7 V			165	ns

Note C is the load capacitance of the SO1n output line.

Remark n = 0, 1

Caution The pins mounted depend on the product. Refer to Caution 2 at the beginning of this chapter.

(f) CSIA0 (master mode, $\overline{\text{SCKA0}}$…internal clock output)

Parameter	Symbol	Conditions		MIN.	TYP.	MAX.	Unit
$\overline{\text{SCKA0}}$ cycle time	t_{KCY3}	4.0 V ≤ V_{DD} ≤ 5.5 V		600			ns
		2.7 V ≤ V_{DD} < 4.0 V		1200			ns
		1.8 V ≤ V_{DD} < 2.7 V		1800			ns
$\overline{\text{SCKA0}}$ high-/low-level width	t_{KH3}, t_{KL3}	4.0 V ≤ V_{DD} ≤ 5.5 V		$t_{KCY3}/2 - 50$			ns
		2.7 V ≤ V_{DD} < 4.0 V		$t_{KCY3}/2 - 100$			ns
		1.8 V ≤ V_{DD} < 2.7 V		$t_{KCY3}/2 - 200$			ns
SIA0 setup time (to $\overline{\text{SCKA0}}$↑)	t_{SIK3}	2.7 V ≤ V_{DD} ≤ 5.5 V		100			ns
		1.8 V ≤ V_{DD} < 2.7 V		200			ns
SIA0 hold time (from $\overline{\text{SCKA0}}$↑)	t_{KSI3}			300			ns
Delay time from $\overline{\text{SCKA0}}$↓ to SOA0 output	t_{KSO3}	C = 100 pF[Note]	4.0 V ≤ V_{DD} ≤ 5.5 V			200	ns
			2.7 V ≤ V_{DD} < 4.0 V			300	ns
			1.8 V ≤ V_{DD} < 2.7 V			400	ns
Time from $\overline{\text{SCKA0}}$↑ to STB0↑	t_{SBD}			$t_{KCY3}/2 - 100$			ns
Strobe signal high-level width	t_{SBW}	4.0 V ≤ V_{DD} ≤ 5.5 V		$t_{KCY3} - 30$			ns
		2.7 V ≤ V_{DD} < 4.0 V		$t_{KCY3} - 60$			ns
		1.8 V ≤ V_{DD} < 2.7 V		$t_{KCY3} - 120$			ns
Busy signal setup time (to busy signal detection timing)	t_{BYS}	2.7 V ≤ V_{DD} ≤ 5.5 V		100			ns
		1.8 V ≤ V_{DD} < 2.7 V		200			ns
Busy signal hold time (from busy signal detection timing)	t_{BYH}			100			ns
Time from busy inactive to $\overline{\text{SCKA0}}$↓	t_{SPS}	4.0 V ≤ V_{DD} ≤ 5.5 V				$2t_{KCY3} + 100$	ns
		2.7 V ≤ V_{DD} < 4.0 V				$2t_{KCY3} + 150$	ns
		1.8 V ≤ V_{DD} < 2.7 V				$2t_{KCY3} + 200$	ns

Note C is the load capacitance of the $\overline{\text{SCKA0}}$ and SOA0 output lines.

Caution The pins mounted depend on the product. Refer to Caution 2 at the beginning of this chapter.

(g) CSIA0 (slave mode, $\overline{\text{SCKA0}}$…external clock input)

Parameter	Symbol	Conditions		MIN.	TYP.	MAX.	Unit
$\overline{\text{SCKA0}}$ cycle time	t_{KCY4}	4.0 V ≤ V_{DD} ≤ 5.5 V		600			ns
		2.7 V ≤ V_{DD} < 4.0 V		1200			ns
		1.8 V ≤ V_{DD} < 2.7 V		1800			ns
$\overline{\text{SCKA0}}$ high-/low-level width	t_{KH4}, t_{KL4}	4.0 V ≤ V_{DD} ≤ 5.5 V		300			ns
		2.7 V ≤ V_{DD} < 4.0 V		600			ns
		1.8 V ≤ V_{DD} < 2.7 V		900			ns
SIA0 setup time (to $\overline{\text{SCKA0}}$↑)	t_{SIK4}			100			ns
SIA0 hold time (from $\overline{\text{SCKA0}}$↑)	t_{KSI4}			$2/f_W$ + 100 Note 1			ns
Delay time from $\overline{\text{SCKA0}}$↓ to SOA0 output	t_{KSO4}	C = 100 pF Note 2	4.0 V ≤ V_{DD} ≤ 5.5 V			$2/f_W$ + 100 Note 1	ns
			2.7 V ≤ V_{DD} < 4.0 V			$2/f_W$ + 200 Note 1	ns
			1.8 V ≤ V_{DD} < 2.7 V			$2/f_W$ + 300 Note 1	ns
$\overline{\text{SCKA0}}$ rise/fall time	t_{R4}, t_{F4}					1000	ns

Notes 1. f_W is the CSIA0 base clock selected by the CSIS0 register.

2. C is the load capacitance of the SOA0 output line.

Caution The pins mounted depend on the product. Refer to Caution 2 at the beginning of this chapter.

Serial Transfer Timing (1/2)

IIC0:

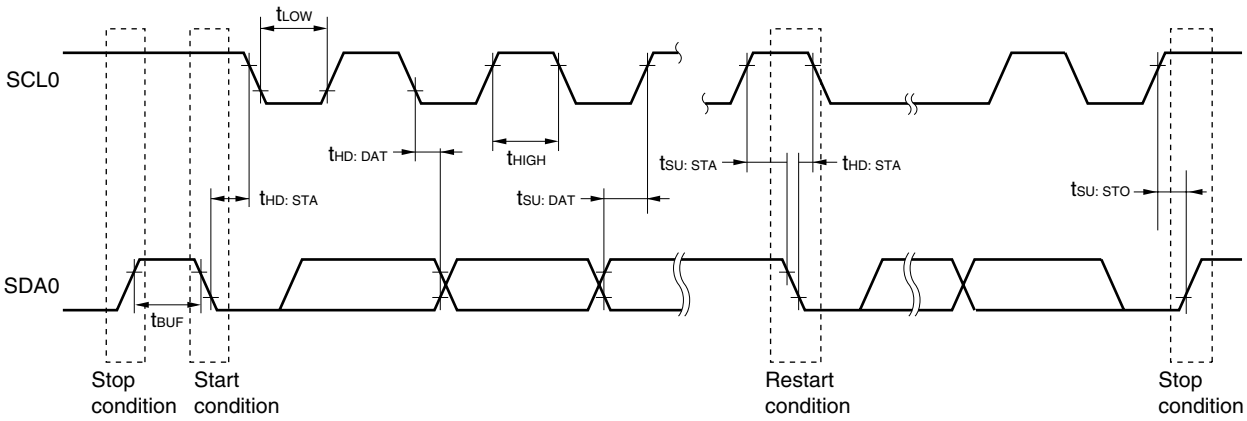

CSI1n:

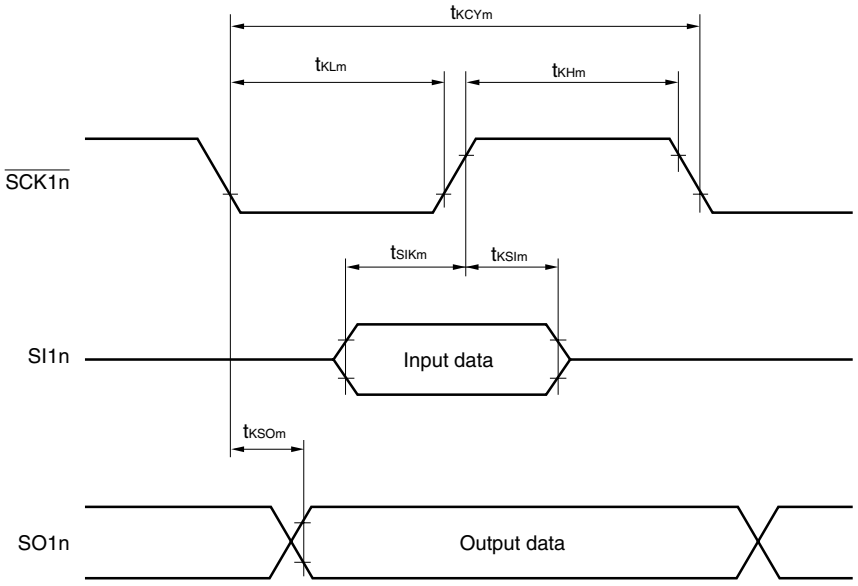

Remark m = 1, 2
n = 0, 1

Caution The pins mounted depend on the product. Refer to Caution 2 at the beginning of this chapter.

Serial Transfer Timing (2/2)

CSIA0:

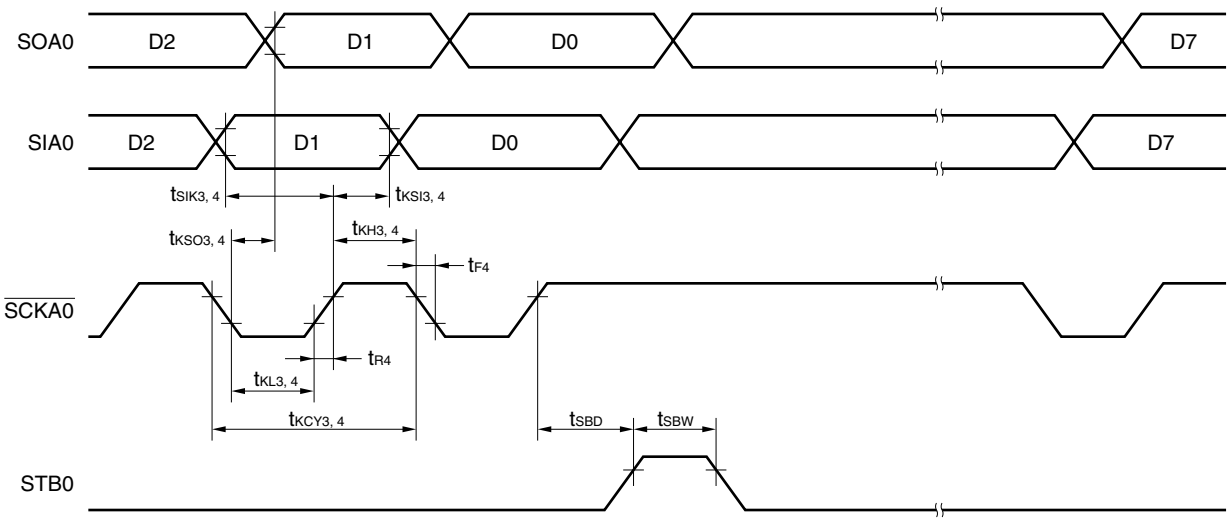

CSIA0 (busy processing):

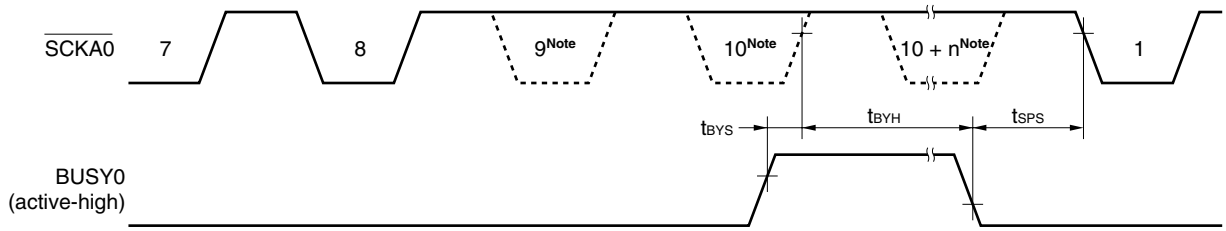

Note SCKA0 does not become low level here, but the timing is illustrated so that the timing specifications can be shown.

Caution The pins mounted depend on the product. Refer to Caution 2 at the beginning of this chapter.

A/D Converter Characteristics

(T_A = –40 to +85°C, 2.3 V ≤ AV_{REF} ≤ V_{DD} = EV_{DD} ≤ 5.5 V, V_{SS} = EV_{SS} = AV_{SS} = 0 V)

Parameter	Symbol	Conditions		MIN.	TYP.	MAX.	Unit
Resolution	R_{ES}					10	bit
Overall error[Notes 1, 2]	A_{INL}	4.0 V ≤ AV_{REF} ≤ 5.5 V				±0.4	%FSR
		2.7 V ≤ AV_{REF} < 4.0 V				±0.6	%FSR
		2.3 V ≤ AV_{REF} < 2.7 V				±1.2	%FSR
Conversion time	t_{CONV}	Conventional-specification Products (μPD78F05xx, 78F05xxD)	4.0 V ≤ AV_{REF} ≤ 5.5 V	6.1		36.7	μs
			2.7 V ≤ AV_{REF} < 4.0 V	12.2		36.7	μs
			2.3 V ≤ AV_{REF} < 2.7 V	27		66.6	μs
		Expanded-specification Products (μPD78F05xxA, 78F05xxDA)	4.0 V ≤ AV_{REF} ≤ 5.5 V	6.1		66.6	μs
			2.7 V ≤ AV_{REF} < 4.0 V	12.2		66.6	μs
			2.3 V ≤ AV_{REF} < 2.7 V	27		66.6	μs
Zero-scale error[Notes 1, 2]	E_{ZS}	4.0 V ≤ AV_{REF} ≤ 5.5 V				±0.4	%FSR
		2.7 V ≤ AV_{REF} < 4.0 V				±0.6	%FSR
		2.3 V ≤ AV_{REF} < 2.7 V				±0.6	%FSR
Full-scale error[Notes 1, 2]	E_{FS}	4.0 V ≤ AV_{REF} ≤ 5.5 V				±0.4	%FSR
		2.7 V ≤ AV_{REF} < 4.0 V				±0.6	%FSR
		2.3 V ≤ AV_{REF} < 2.7 V				±0.6	%FSR
Integral non-linearity error[Note 1]	I_{LE}	4.0 V ≤ AV_{REF} ≤ 5.5 V				±2.5	LSB
		2.7 V ≤ AV_{REF} < 4.0 V				±4.5	LSB
		2.3 V ≤ AV_{REF} < 2.7 V				±6.5	LSB
Differential non-linearity error[Note 1]	D_{LE}	4.0 V ≤ AV_{REF} ≤ 5.5 V				±1.5	LSB
		2.7 V ≤ AV_{REF} < 4.0 V				±2.0	LSB
		2.3 V ≤ AV_{REF} < 2.7 V				±2.0	LSB
Analog input voltage	V_{AIN}			AV_{SS}		AV_{REF}	V

Notes 1. Excludes quantization error (±1/2 LSB).

2. This value is indicated as a ratio (%FSR) to the full-scale value.

Caution The pins mounted depend on the product. Refer to Caution 2 at the beginning of this chapter.

1.59 V POC Circuit Characteristics (T_A = –40 to +85°C, V_{SS} = EV_{SS} = 0 V)

Parameter	Symbol	Conditions	MIN.	TYP.	MAX.	Unit
Detection voltage	V_{POC}		1.44	1.59	1.74	V
Power supply voltage rise inclination	t_{PTH}	V_{DD}: 0 V → change inclination of V_{POC}	0.5			V/ms
Minimum pulse width	t_{PW}		200			μs

1.59 V POC Circuit Timing

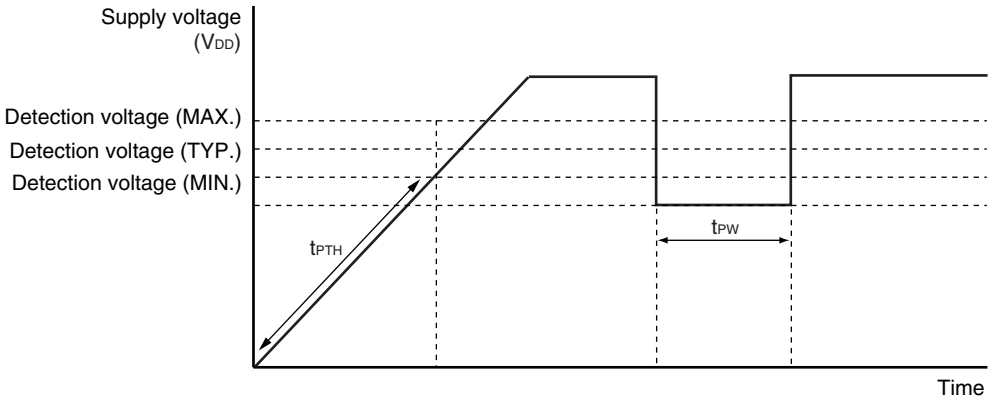

Supply Voltage Rise Time (T_A = –40 to +85°C, V_{SS} = EV_{SS} = 0 V)

Parameter	Symbol	Conditions	MIN.	TYP.	MAX.	Unit
Maximum time to rise to 1.8 V (V_{DD} (MIN.)) (V_{DD}: 0 V → 1.8 V)	t_{PUP1}	POCMODE (option byte) = 0, when $\overline{\text{RESET}}$ input is not used			3.6	ms
Maximum time to rise to 1.8 V (V_{DD} (MIN.)) (releasing $\overline{\text{RESET}}$ input → V_{DD}: 1.8 V)	t_{PUP2}	POCMODE (option byte) = 0, when $\overline{\text{RESET}}$ input is used			1.9	ms

Supply Voltage Rise Time Timing

• When $\overline{\text{RESET}}$ pin input is not used

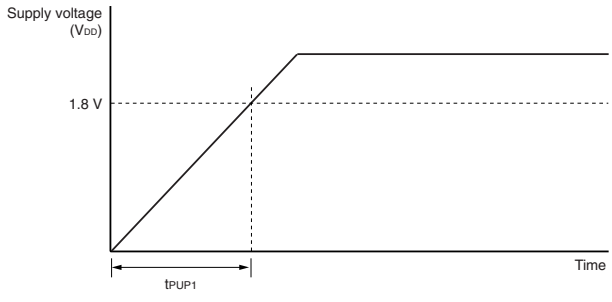

• When $\overline{\text{RESET}}$ pin input is used

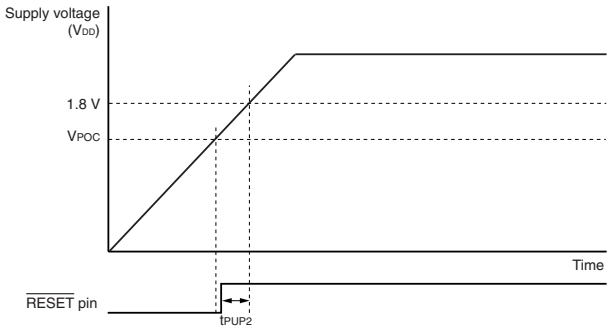

Caution The pins mounted depend on the product. Refer to Caution 2 at the beginning of this chapter.

2.7 V POC Circuit Characteristics (T_A = –40 to +85°C, V_{SS} = EV_{SS} = 0 V)

Parameter	Symbol	Conditions	MIN.	TYP.	MAX.	Unit
Detection voltage on application of supply voltage	V_{DDPOC}	POCMODE (option bye) = 1	2.50	2.70	2.90	V

Remark The operations of the POC circuit are as described below, depending on the POCMODE (option byte) setting.

Option Byte Setting	POC Mode	Operation
POCMODE = 0	1.59 V mode operation	A reset state is retained until V_{POC} = 1.59 V (TYP.) is reached after the power is turned on, and the reset is released when V_{POC} is exceeded. After that, POC detection is performed at V_{POC}, similarly as when the power was turned on. The power supply voltage must be raised at a time of t_{PUP1} or t_{PUP2} when POCMODE is 0.
POCMODE = 1	2.7 V/1.59 V mode operation	A reset state is retained until V_{DDPOC} = 2.7 V (TYP.) is reached after the power is turned on, and the reset is released when V_{DDPOC} is exceeded. After that, POC detection is performed at V_{POC} = 1.59 V (TYP.) and not at V_{DDPOC}. The use of the 2.7 V/1.59 V POC mode is recommended when the rise of the voltage, after the power is turned on and until the voltage reaches 1.8 V, is more relaxed than t_{PTH}.

Caution The pins mounted depend on the product. Refer to Caution 2 at the beginning of this chapter.

LVI Circuit Characteristics (T_A = –40 to +85°C, $V_{POC} \leq V_{DD} = EV_{DD} \leq 5.5$ V, $AV_{REF} \leq V_{DD}$, $V_{SS} = EV_{SS}$ = 0 V)

Parameter		Symbol	Conditions	MIN.	TYP.	MAX.	Unit
Detection voltage	Supply voltage level	V_{LVI0}		4.14	4.24	4.34	V
		V_{LVI1}		3.99	4.09	4.19	V
		V_{LVI2}		3.83	3.93	4.03	V
		V_{LVI3}		3.68	3.78	3.88	V
		V_{LVI4}		3.52	3.62	3.72	V
		V_{LVI5}		3.37	3.47	3.57	V
		V_{LVI6}		3.22	3.32	3.42	V
		V_{LVI7}		3.06	3.16	3.26	V
		V_{LVI8}		2.91	3.01	3.11	V
		V_{LVI9}		2.75	2.85	2.95	V
		V_{LVI10}		2.60	2.70	2.80	V
		V_{LVI11}		2.45	2.55	2.65	V
		V_{LVI12}		2.29	2.39	2.49	V
		V_{LVI13}		2.14	2.24	2.34	V
		V_{LVI14}		1.98	2.08	2.18	V
		V_{LVI15}		1.83	1.93	2.03	V
	External input pin[Note 1]	EXLVI	EXLVI < V_{DD}, 1.8 V ≤ V_{DD} ≤ 5.5 V	1.11	1.21	1.31	V
Minimum pulse width		t_{LW}		200			μs
Operation stabilization wait time[Note 2]		t_{LWAIT}		10			μs

Notes 1. The EXLVI/P120/INTP0 pin is used.

2. Time required from setting bit 7 (LVION) of the low-voltage detection register (LVIM) to 1 to operation stabilization

Remark $V_{LVI(n-1)} > V_{LVIn}$: n = 1 to 15

LVI Circuit Timing

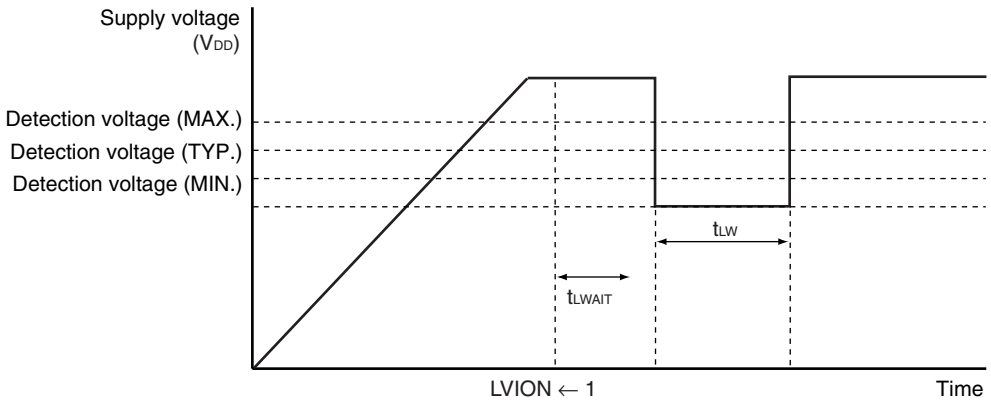

Caution The pins mounted depend on the product. Refer to Caution 2 at the beginning of this chapter.

Data Memory STOP Mode Low Supply Voltage Data Retention Characteristics (T_A = –40 to +85°C)

Parameter	Symbol	Conditions	MIN.	TYP.	MAX.	Unit
Data retention supply voltage	V_{DDDR}		1.44[Note]		5.5	V

Note The value depends on the POC detection voltage. When the voltage drops, the data is retained until a POC reset is effected, but data is not retained when a POC reset is effected.

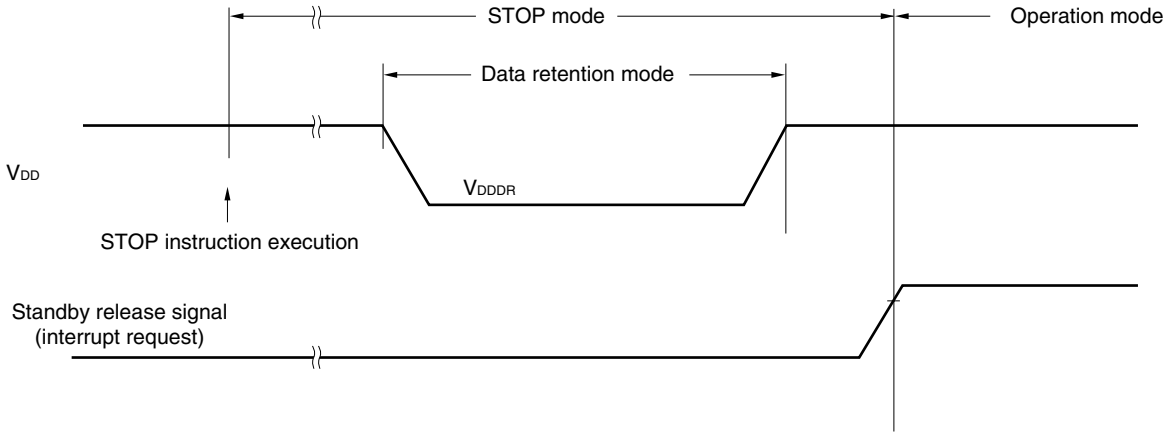

Caution The pins mounted depend on the product. Refer to Caution 2 at the beginning of this chapter.

Flash Memory Programming Characteristics

(T_A = –40 to +85°C, 2.7 V ≤ V_{DD} = EV_{DD} ≤ 5.5 V, AV_{REF} ≤ V_{DD}, V_{SS} = EV_{SS} = AV_{SS} = 0 V)

• Basic characteristics

Parameter		Symbol	Conditions				MIN.	TYP.	MAX.	Unit
V_{DD} supply current		I_{DD}	f_{XP} = 10 MHz (TYP.), 20 MHz (MAX.)					4.5	11.0	mA
Erase time Notes 1, 2	All block	T_{eraca}						20	200	ms
	Block unit	T_{erasa}						20	200	ms
Write time (in 8-bit units) Note 1		T_{wrwa}						10	100	μs
Number of rewrites per chip		C_{erwr}	1 erase + 1 write after erase = 1 rewrite Note 3	Expanded-specification Products (μPD78F05xxA, 78F05xxDA)	• When a flash memory programmer is used, and the libraries Note 4 provided by Renesas Electronics are used • For program update	Retention: 15 years	1000			Times
					• When the EEPROM emulation libraries Note 5 provided by Renesas Electronics are used • The rewritable ROM size: 4 KB • For data update	Retention: 5 years	10000			Times
				Expanded-specification Products (μPD78F05xxA, 78F05xxDA)	Conditions other than the above Note 6	Retention: 10 years	100			Times
				Conventional-specification Products (μPD78F05xx, 78F05xxD)						

Notes 1. Characteristic of the flash memory. For the characteristic when a dedicated flash programmer, PG-FP4 or PG-FP5, is used and the rewrite time during self programming, see **Tables 27-12** to **27-14**.

2. The prewrite time before erasure and the erase verify time (writeback time) are not included.

3. When a product is first written after shipment, “erase → write” and “write only” are both taken as one rewrite.

4. The sample library specified by the **78K0/Kx2 Flash Memory Self Programming User’s Manual** (Document No.: **U17516E**) is excluded.

5. The sample program specified by the **78K0/Kx2 EEPROM Emulation Application Note** (Document No.: **U17517E**) is excluded.

6. These include when the sample library specified by the **78K0/Kx2 Flash Memory Self Programming User’s Manual** (Document No.: **U17516E**) and the sample program specified by **the 78K0/Kx2 EEPROM Emulation Application Note** (Document No.: **U17517E**) are used.

Remarks 1. f_{XP}: Main system clock oscillation frequency

2. For serial write operation characteristics, refer to **78K0/Kx2 Flash Memory Programming (Programmer) Application Note (**Document No.: **U17739E)**.

CHAPTER 31 ELECTRICAL SPECIFICATIONS ((A) GRADE PRODUCTS)

Target Products	Conventional-specification Products	Expanded-specification Products
78K0/KB2	μPD78F0500(A), 78F0501(A), 78F0502(A), 78F0503(A)	μPD78F0500A(A), 78F0501A(A), 78F0502A(A), 78F0503A(A)
78K0/KC2	μPD78F0511(A), 78F0512(A), 78F0513(A), 78F0514(A), 78F0515(A)	μPD78F0511A(A), 78F0512A(A), 78F0513A(A), 78F0514A(A), 78F0515A(A)
78K0/KD2	μPD78F0521(A), 78F0522(A), 78F0523(A), 78F0524(A), 78F0525(A), 78F0526(A), 78F0527(A)	μPD78F0521A(A), 78F0522A(A), 78F0523A(A), 78F0524A(A), 78F0525A(A), 78F0526A(A), 78F0527A(A)
78K0/KE2	μPD78F0531(A), 78F0532(A), 78F0533(A), 78F0534(A), 78F0535(A), 78F0536(A), 78F0537(A)	μPD78F0531A(A), 78F0532A(A), 78F0533A(A), 78F0534A(A), 78F0535A(A), 78F0536A(A), 78F0537A(A)
78K0/KF2	μPD78F0544(A), 78F0545(A), 78F0546(A), 78F0547(A)	μPD78F0544A(A), 78F0545A(A), 78F0546A(A), 78F0547A(A)

The following items are described separately for conventional-specification products (μPD78F05xx(A)) and expanded-specification products (μPD78F05xxA(A)).

- X1 clock oscillation frequency (**X1 oscillator characteristics**)
- Instruction cycle, peripheral hardware clock frequency, external main system clock frequency, external main system clock input high-level width, and external main system clock input low-level width (**(1) Basic operation** in **AC characteristics**)
- A/D conversion time (**A/D Converter Characteristics**)
- Number of rewrites per chip (**Flash Memory Programming Characteristics**)

Caution The pins mounted depend on the product as follows.

(1) Port functions

Port	78K0/KB2	78K0/KC2			78K0/KD2	78K0/KE2	78K0/KF2
	30/36 Pins	38 Pins	44 Pins	48 Pins	52 Pins	64 Pins	80 Pins
Port 0	P00, P01				P00 to P03	P00 to P06	
Port 1	P10 to P17						
Port 2	P20 to P23	P20 to P25	P20 to P27				
Port 3	P30 to P33						
Port 4	–		P40, P41			P40 to P43	P40 to P47
Port 5	–					P50 to P53	P50 to P57
Port 6	P60, P61	P60 to P63					P60 to P67
Port 7	–	P70, P71	P70 to P73	P70 to P75	P70 to P77		
Port 12	P120 to P122	P120 to P124					
Port 13	–			P130			
Port 14	–			P140		P140, P141	P140 to P145

(The remaining table is on the next page.)

(2) Non-port functions

Port		78K0/KB2	78K0/KC2			78K0/KD2	78K0/KE2	78K0/KF2
		30/36 Pins	38 Pins	44 Pins	48 Pins	52 Pins	64 Pins	80 Pins
Power supply, ground		V_{DD}, EV_{DD}[Note 1], V_{SS}, EV_{SS}[Note 1], AV_{REF}, AV_{SS}	V_{DD}, AV_{REF}, V_{SS}, AV_{SS}				V_{DD}, EV_{DD}, V_{SS}, EV_{SS}, AV_{REF}, AV_{SS}	
Regulator		REGC						
Reset		$\overline{\text{RESET}}$						
Clock oscillation		X1, X2, EXCLK	X1, X2, XT1, XT2, EXCLK, EXCLKS					
Writing to flash memory		FLMD0						
Interrupt		INTP0 to INTP5			INTP0 to INTP6		INTP0 to INTP7	
Key interrupt		–	KR0, KR1	KR0 to KR3		KR0 to KR7		
Timer	TM00	TI000, TI010, TO00						
	TM01	–					TI001[Note 2], TI011[Note 2], TO01[Note 2]	
	TM50	TI50, TO50						
	TM51	TI51, TO51						
	TMH0	TOH0						
	TMH1	TOH1						
Serial interface	UART0	RxD0, TxD0						
	UART6	RxD6, TxD6						
	IIC0	SCL0, SDA0	SCL0, SDA0, EXSCL0					
	CSI10	$\overline{\text{SCK10}}$, SI10, SO10						
	CSI11	–					$\overline{\text{SCK11}}$[Note 2], SI11[Note 2], SO11[Note 2], $\overline{\text{SSI11}}$[Note 2]	
	CSIA0	–						$\overline{\text{SCKA0}}$, SIA0, SOA0, BUSY0, STB0
A/D converter		ANI0 to ANI3	ANI0 to ANI5	ANI0 to ANI7				
Clock output		–			PCL			
Buzzer output		–					BUZ	
Low-voltage detector (LVI)		EXLVI						

Notes 1. This is not mounted onto 30-pin products.

2. This is not mounted onto the 78K0/KE2 products whose flash memory is less than 32 KB.

Caution The pins mounted depend on the product. Refer to Caution at the beginning of this chapter.

Absolute Maximum Ratings (T_A = 25°C) (1/2)

Parameter	Symbol	Conditions	Ratings	Unit
Supply voltage	V_{DD}		−0.5 to +6.5	V
	EV_{DD}		−0.5 to +6.5	V
	V_{SS}		−0.5 to +0.3	V
	EV_{SS}		−0.5 to +0.3	V
	AV_{REF}		−0.5 to V_{DD} + 0.3[Note]	V
	AV_{SS}		−0.5 to +0.3	V
REGC pin input voltage	V_{IREGC}		−0.5 to +3.6 and −0.5 to V_{DD}	V
Input voltage	V_{I1}	P00 to P06, P10 to P17, P20 to P27, P30 to P33, P40 to P47, P50 to P57, P64 to P67, P70 to P77, P120 to P124, P140 to P145, X1, X2, XT1, XT2, $\overline{\text{RESET}}$, FLMD0	−0.3 to V_{DD} + 0.3[Note]	V
	V_{I2}	P60 to P63 (N-ch open drain)	−0.3 to +6.5	V
Output voltage	V_O		−0.3 to V_{DD} + 0.3[Note]	V
Analog input voltage	V_{AN}	ANI0 to ANI7	−0.3 to AV_{REF} + 0.3[Note] and −0.3 to V_{DD} + 0.3[Note]	V

Note Must be 6.5 V or lower.

Caution Product quality may suffer if the absolute maximum rating is exceeded even momentarily for any parameter. That is, the absolute maximum ratings are rated values at which the product is on the verge of suffering physical damage, and therefore the product must be used under conditions that ensure that the absolute maximum ratings are not exceeded.

Remark Unless specified otherwise, the characteristics of alternate-function pins are the same as those of port pins.

Caution The pins mounted depend on the product. Refer to Caution at the beginning of this chapter.

Absolute Maximum Ratings (T_A = 25°C) (2/2)

Parameter	Symbol	Conditions		Ratings	Unit
Output current, high	I_{OH}	Per pin	P00 to P06, P10 to P17, P30 to P33, P40 to P47, P50 to P57, P64 to P67, P70 to P77, P120, P130, P140 to P145	−10	mA
		Total of all pins −80 mA	P00 to P04, P40 to P47, P120, P130, P140 to P145	−25	mA
			P05, P06, P10 to P17, P30 to P33, P50 to P57, P64 to P67, P70 to P77	−55	mA
		Per pin	P20 to P27	−0.5	mA
		Total of all pins		−2	mA
		Per pin	P121 to P124	−1	mA
		Total of all pins		−4	mA
Output current, low	I_{OL}	Per pin	P00 to P06, P10 to P17, P30 to P33, P40 to P47, P50 to P57, P60 to P67, P70 to P77, P120, P130, P140 to P145	30	mA
		Total of all pins 200 mA	P00 to P04, P40 to P47, P120, P130, P140 to P145	60	mA
			P05, P06, P10 to P17, P30 to P33, P50 to P57, P60 to P67, P70 to P77	140	mA
		Per pin	P20 to P27	1	mA
		Total of all pins		5	mA
		Per pin	P121 to P124	4	mA
		Total of all pins		10	mA
Operating ambient temperature	T_A			−40 to +85	°C
Storage temperature	T_{stg}			−65 to +150	°C

Cautions 1. Product quality may suffer if the absolute maximum rating is exceeded even momentarily for any parameter. That is, the absolute maximum ratings are rated values at which the product is on the verge of suffering physical damage, and therefore the product must be used under conditions that ensure that the absolute maximum ratings are not exceeded.

2. The value of the current that can be run per pin must satisfy the value of the current per pin and the total value of the currents of all pins.

Remark Unless specified otherwise, the characteristics of alternate-function pins are the same as those of port pins.

Caution The pins mounted depend on the product. Refer to Caution at the beginning of this chapter.

X1 Oscillator Characteristics

(T_A = –40 to +85°C, 1.8 V ≤ V_{DD} = EV_{DD} ≤ 5.5 V, V_{SS} = EV_{SS} = AV_{SS} = 0 V)

Resonator	Recommended Circuit	Parameter	Conditions		MIN.	TYP.	MAX.	Unit
Ceramic resonator, Crystal resonator	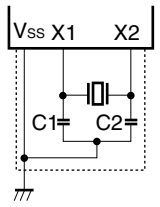	X1 clock oscillation frequency (f_X)Note 1	Conventional-specification Products (μPD78F05xx (A))	4.0 V ≤ V_{DD} ≤ 5.5 V	1.0Note 2		20.0	MHz
				2.7 V ≤ V_{DD} < 4.0 V	1.0Note 2		10.0	
				1.8 V ≤ V_{DD} < 2.7 V	1.0		5.0	
			Expanded-specification Products (μPD78F05xxA (A))	2.7 V ≤ V_{DD} ≤ 5.5 V	1.0Note 2		20.0	MHz
				1.8 V ≤ V_{DD} < 2.7 V	1.0		5.0	

Notes 1. Indicates only oscillator characteristics. Refer to **AC Characteristics** for instruction execution time.

2. It is 2.0 MHz (MIN.) when programming on the board via UART6.

Cautions 1. When using the X1 oscillator, wire as follows in the area enclosed by the broken lines in the above figures to avoid an adverse effect from wiring capacitance.

- **Keep the wiring length as short as possible.**
- **Do not cross the wiring with the other signal lines.**
- **Do not route the wiring near a signal line through which a high fluctuating current flows.**
- **Always make the ground point of the oscillator capacitor the same potential as V_{SS}.**
- **Do not ground the capacitor to a ground pattern through which a high current flows.**
- **Do not fetch signals from the oscillator.**

2. Since the CPU is started by the internal high-speed oscillation clock after a reset release, check the X1 clock oscillation stabilization time using the oscillation stabilization time counter status register (OSTC) by the user. Determine the oscillation stabilization time of the OSTC register and oscillation stabilization time select register (OSTS) after sufficiently evaluating the oscillation stabilization time with the resonator to be used.

Remark For the resonator selection and oscillator constant, customers are requested to either evaluate the oscillation themselves or apply to the resonator manufacturer for evaluation.

Caution The pins mounted depend on the product. Refer to Caution at the beginning of this chapter.

Internal Oscillator Characteristics

(T_A = –40 to +85°C, 1.8 V ≤ V_{DD} = EV_{DD} ≤ 5.5 V, V_{SS} = EV_{SS} = AV_{SS} = 0 V)

Resonator	Parameter	Conditions		MIN.	TYP.	MAX.	Unit
8 MHz internal oscillator	Internal high-speed oscillation clock frequency (f_{RH})[Note]	RSTS = 1	2.7 V ≤ V_{DD} ≤ 5.5 V	7.6	8.0	8.4	MHz
			1.8 V ≤ V_{DD} < 2.7 V	7.6	8.0	10.4	MHz
		RSTS = 0		2.48	5.6	9.86	MHz
240 kHz internal oscillator	Internal low-speed oscillation clock frequency (f_{RL})	2.7 V ≤ V_{DD} ≤ 5.5 V		216	240	264	kHz
		1.8 V ≤ V_{DD} < 2.7 V		192	240	264	kHz

Note Indicates only oscillator characteristics. Refer to **AC Characteristics** for instruction execution time.

Remark RSTS: Bit 7 of the internal oscillation mode register (RCM)

XT1 Oscillator Characteristics[Note 1]

(T_A = –40 to +85°C, 1.8 V ≤ V_{DD} = EV_{DD} ≤ 5.5 V, V_{SS} = EV_{SS} = AV_{SS} = 0 V)

Resonator	Recommended Circuit	Parameter	Conditions	MIN.	TYP.	MAX.	Unit
Crystal resonator	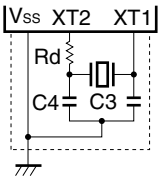	XT1 clock oscillation frequency (f_{XT})[Note 2]		32	32.768	35	kHz

Notes 1. The 78K0/KB2 is not provided with the XT1 oscillator.

2. Indicates only oscillator characteristics. Refer to **AC Characteristics** for instruction execution time.

Cautions 1. When using the XT1 oscillator, wire as follows in the area enclosed by the broken lines in the above figure to avoid an adverse effect from wiring capacitance.

- **Keep the wiring length as short as possible.**
- **Do not cross the wiring with the other signal lines.**
- **Do not route the wiring near a signal line through which a high fluctuating current flows.**
- **Always make the ground point of the oscillator capacitor the same potential as V_{SS}.**
- **Do not ground the capacitor to a ground pattern through which a high current flows.**
- **Do not fetch signals from the oscillator.**

2. The XT1 oscillator is designed as a low-amplitude circuit for reducing power consumption, and is more prone to malfunction due to noise than the X1 oscillator. Particular care is therefore required with the wiring method when the XT1 clock is used.

Remark For the resonator selection and oscillator constant, customers are requested to either evaluate the oscillation themselves or apply to the resonator manufacturer for evaluation.

Caution The pins mounted depend on the product. Refer to Caution at the beginning of this chapter.

DC Characteristics (1/4)

(T_A = –40 to +85°C, 1.8 V ≤ V_{DD} = EV_{DD} ≤ 5.5 V, AV_{REF} ≤ V_{DD}, V_{SS} = EV_{SS} = AV_{SS} = 0 V)

Parameter	Symbol	Conditions		MIN.	TYP.	MAX.	Unit
Output current, high[Note 1]	I_{OH1}	Per pin for P00 to P06, P10 to P17, P30 to P33, P40 to P47, P50 to P57, P64 to P67, P70 to P77, P120, P130, P140 to P145	4.0 V ≤ V_{DD} ≤ 5.5 V			–3.0	mA
			2.7 V ≤ V_{DD} < 4.0 V			–2.5	mA
			1.8 V ≤ V_{DD} < 2.7 V			–1.0	mA
		Total of P00 to P04, P40 to P47, P120, P130, P140 to P145[Note 3]	4.0 V ≤ V_{DD} ≤ 5.5 V			–12.0	mA
			2.7 V ≤ V_{DD} < 4.0 V			–7.0	mA
			1.8 V ≤ V_{DD} < 2.7 V			–5.0	mA
		Total of P05, P06, P10 to P17, P30 to P33, P50 to P57, P64 to P67, P70 to P77[Note 3]	4.0 V ≤ V_{DD} ≤ 5.5 V			–18.0	mA
			2.7 V ≤ V_{DD} < 4.0 V			–15.0	mA
			1.8 V ≤ V_{DD} < 2.7 V			–10.0	mA
		Total of all the pins above[Note 3]	4.0 V ≤ V_{DD} ≤ 5.5 V			–23.0	mA
			2.7 V ≤ V_{DD} < 4.0 V			–20.0	mA
			1.8 V ≤ V_{DD} < 2.7 V			–15.0	mA
	I_{OH2}	Per pin for P20 to P27	AV_{REF} = V_{DD}			–0.1	mA
		Per pin for P121 to P124				–0.1	mA
Output current, low[Note 2]	I_{OL1}	Per pin for P00 to P06, P10 to P17, P30 to P33, P40 to P47, P50 to P57, P64 to P67, P70 to P77, P120, P130, P140 to P145	4.0 V ≤ V_{DD} ≤ 5.5 V			8.5	mA
			2.7 V ≤ V_{DD} < 4.0 V			5.0	mA
			1.8 V ≤ V_{DD} < 2.7 V			2.0	mA
		Per pin for P60 to P63	4.0 V ≤ V_{DD} ≤ 5.5 V			15.0	mA
			2.7 V ≤ V_{DD} < 4.0 V			5.0	mA
			1.8 V ≤ V_{DD} < 2.7 V			2.0	mA
		Total of P00 to P04, P40 to P47, P120, P130, P140 to P145[Note 3]	4.0 V ≤ V_{DD} ≤ 5.5 V			20.0	mA
			2.7 V ≤ V_{DD} < 4.0 V			15.0	mA
			1.8 V ≤ V_{DD} < 2.7 V			9.0	mA
		Total of P05, P06, P10 to P17, P30 to P33, P50 to P57, P60 to P67, P70 to P77[Note 3]	4.0 V ≤ V_{DD} ≤ 5.5 V			45.0	mA
			2.7 V ≤ V_{DD} < 4.0 V			35.0	mA
			1.8 V ≤ V_{DD} < 2.7 V			20.0	mA
		Total of all the pins above[Note 3]	4.0 V ≤ V_{DD} ≤ 5.5 V			65.0	mA
			2.7 V ≤ V_{DD} < 4.0 V			50.0	mA
			1.8 V ≤ V_{DD} < 2.7 V			29.0	mA
	I_{OL2}	Per pin for P20 to P27	AV_{REF} = V_{DD}			0.4	mA
		Per pin for P121 to P124				0.4	mA

Notes 1. Value of current at which the device operation is guaranteed even if the current flows from V_{DD} to an output pin.

2. Value of current at which the device operation is guaranteed even if the current flows from an output pin to GND.

3. Specification under conditions where the duty factor is 70% (time for which current is output is 0.7 × t and time for which current is not output is 0.3 × t, where t is a specific time). The total output current of the pins at a duty factor of other than 70% can be calculated by the following expression.

- Where the duty factor of I_{OH} is n%: Total output current of pins = (I_{OH} × 0.7)/(n × 0.01)

<Example> Where the duty factor is 50%, I_{OH} = –20.0 mA

Total output current of pins = (–20.0 × 0.7)/(50 × 0.01) = –28.0 mA

However, the current that is allowed to flow into one pin does not vary depending on the duty factor. A current higher than the absolute maximum rating must not flow into one pin.

Remark Unless specified otherwise, the characteristics of alternate-function pins are the same as those of port pins.

Caution The pins mounted depend on the product. Refer to Caution at the beginning of this chapter.

DC Characteristics (2/4)

(T_A = –40 to +85°C, 1.8 V ≤ V_{DD} = EV_{DD} ≤ 5.5 V, AV_{REF} ≤ V_{DD}, V_{SS} = EV_{SS} = AV_{SS} = 0 V)

Parameter	Symbol	Conditions		MIN.	TYP.	MAX.	Unit
Input voltage, high (products whose flash memory is at least 48 KB)[Note 1]	V_{IH1}	P02, P12, P13, P15, P40 to P47, P50 to P57, P64 to P67, P121 to P124, P144, P145		0.7V_{DD}		V_{DD}	V
	V_{IH2}	P00, P01, P03 to P06, P10, P11, P14, P16, P17, P30 to P33, P70 to P77, P120, P140 to P143, EXCLK, EXCLKS, $\overline{\text{RESET}}$		0.8V_{DD}		V_{DD}	V
	V_{IH3}	P20 to P27	AV_{REF} = V_{DD}	0.7AV_{REF}		AV_{REF}	V
	V_{IH4}	P60 to P63		0.7V_{DD}		6.0	V
Input voltage, high (products whose flash memory is less than 32 KB)[Note 2]	V_{IH1}	P02 to P06, P12, P13, P15, P40 to P43, P50 to P53, P121 to P124		0.7V_{DD}		V_{DD}	V
	V_{IH2}	P00, P01, P10, P11, P14, P16, P17, P30 to P33, P70 to P77, P120, P140, P141, EXCLK, EXCLKS, $\overline{\text{RESET}}$		0.8V_{DD}		V_{DD}	V
	V_{IH3}	P20 to P27	AV_{REF} = V_{DD}	0.7AV_{REF}		AV_{REF}	V
	V_{IH4}	P60 to P63		0.7V_{DD}		6.0	V
Input voltage, low (products whose flash memory is at least 48 KB)[Note 1]	V_{IL1}	P02, P12, P13, P15, P40 to P47, P50 to P57, P60 to P67, P121 to P124, P144, P145		0		0.3V_{DD}	V
	V_{IL2}	P00, P01, P03 to P06, P10, P11, P14, P16, P17, P30 to P33, P70 to P77, P120, P140 to P143, EXCLK, EXCLKS, $\overline{\text{RESET}}$		0		0.2V_{DD}	V
	V_{IL3}	P20 to P27	AV_{REF} = V_{DD}	0		0.3AV_{REF}	V
Input voltage, low (products whose flash memory is less than 32 KB)[Note 2]	V_{IL1}	P02 to P06, P12, P13, P15, P40 to P43, P50 to P53, P60 to P63, P121 to P124		0		0.3V_{DD}	V
	V_{IL2}	P00, P01, P10, P11, P14, P16, P17, P30 to P33, P70 to P77, P120, P140, P141, EXCLK, EXCLKS, $\overline{\text{RESET}}$		0		0.2V_{DD}	V
	V_{IL3}	P20 to P27	AV_{REF} = V_{DD}	0		0.3AV_{REF}	V
Output voltage, high	V_{OH1}	P00 to P06, P10 to P17, P30 to P33, P40 to P47, P50 to P57, P64 to P67, P70 to P77, P120, P130, P140 to P145	4.0 V ≤ V_{DD} ≤ 5.5 V, I_{OH1} = –3.0 mA	V_{DD} – 0.7			V
			2.7 V ≤ V_{DD} < 4.0 V, I_{OH1} = –2.5 mA	V_{DD} – 0.5			V
			1.8 V ≤ V_{DD} < 2.7 V, I_{OH1} = –1.0 mA	V_{DD} – 0.5			V
	V_{OH2}	P20 to P27	AV_{REF} = V_{DD}, I_{OH2} = –100 μA	V_{DD} – 0.5			V
		P121 to P124	I_{OH2} = –100 μA	V_{DD} – 0.5			V

Notes 1. Supported products: 78K0/KD2 and 78K0/KE2 whose flash memory is at least 48 KB, and 78K0/KF2

2. Supported products: 78K0/KD2 and 78K0/KE2 whose flash memory is less than 32 KB, 78K0/KB2, and 78K0/KC2

Remark Unless specified otherwise, the characteristics of alternate-function pins are the same as those of port pins.

Caution The pins mounted depend on the product. Refer to Caution at the beginning of this chapter.

DC Characteristics (3/4)

(T_A = –40 to +85°C, 1.8 V ≤ V_{DD} = EV_{DD} ≤ 5.5 V, AV_{REF} ≤ V_{DD}, V_{SS} = EV_{SS} = AV_{SS} = 0 V)

Parameter	Symbol	Conditions			MIN.	TYP.	MAX.	Unit
Output voltage, low	V_{OL1}	P00 to P06, P10 to P17, P30 to P33, P40 to P47, P50 to P57, P64 to P67, P70 to P77, P120, P130, P140 to P145	4.0 V ≤ V_{DD} ≤ 5.5 V, I_{OL1} = 8.5 mA				0.7	V
			2.7 V ≤ V_{DD} < 4.0 V, I_{OL1} = 5.0 mA				0.7	V
			1.8 V ≤ V_{DD} < 2.7 V, I_{OL1} = 2.0 mA				0.5	V
			1.8 V ≤ V_{DD} < 2.7 V, I_{OL1} = 0.5 mA				0.4	V
	V_{OL2}	P20 to P27	AV_{REF} = V_{DD}, I_{OL2} = 0.4 mA				0.4	V
		P121 to P124	I_{OL2} = 0.4 mA				0.4	V
	V_{OL3}	P60 to P63	4.0 V ≤ V_{DD} ≤ 5.5 V, I_{OL1} = 15.0 mA				2.0	V
			4.0 V ≤ V_{DD} ≤ 5.5 V, I_{OL1} = 5.0 mA				0.4	V
			2.7 V ≤ V_{DD} < 4.0 V, I_{OL1} = 5.0 mA				0.6	V
			2.7 V ≤ V_{DD} < 4.0 V, I_{OL1} = 3.0 mA				0.4	V
			1.8 V ≤ V_{DD} < 2.7 V, I_{OL1} = 2.0 mA				0.4	V
Input leakage current, high	I_{LIH1}	P00 to P06, P10 to P17, P30 to P33, P40 to P47, P50 to P57, P60 to P67, P70 to P77, P120, P140 to P145, FLMD0, $\overline{\text{RESET}}$	V_I = V_{DD}				1	μA
	I_{LIH2}	P20 to P27	V_I = AV_{REF} = V_{DD}				1	μA
	I_{LIH3}	P121 to 124 (X1, X2, XT1, XT2)	V_I = V_{DD}	I/O port mode			1	μA
				OSC mode			20	μA
Input leakage current, low	I_{LIL1}	P00 to P06, P10 to P17, P30 to P33, P40 to P47, P50 to P57, P60 to P67, P70 to P77, P120, P140 to P145, FLMD0, $\overline{\text{RESET}}$	V_I = V_{SS}				–1	μA
	I_{LIL2}	P20 to P27	V_I = V_{SS}, AV_{REF} = V_{DD}				–1	μA
	I_{LIL3}	P121 to 124 (X1, X2, XT1, XT2)	V_I = V_{SS}	I/O port mode			–1	μA
				OSC mode			–20	μA
Pull-up resistor	R_U	V_I = V_{SS}			10	20	100	kΩ
FLMD0 supply voltage	V_{IL}	In normal operation mode			0		0.2V_{DD}	V
	V_{IH}	In self-programming mode			0.8V_{DD}		V_{DD}	V

Remark Unless specified otherwise, the characteristics of alternate-function pins are the same as those of port pins.

Caution The pins mounted depend on the product. Refer to Caution at the beginning of this chapter.

DC Characteristics (4/4)

(T_A = −40 to +85°C, 1.8 V ≤ V_{DD} = EV_{DD} ≤ 5.5 V, AV_{REF} ≤ V_{DD}, V_{SS} = EV_{SS} = AV_{SS} = 0 V)

Parameter	Symbol	Conditions			MIN.	TYP.	MAX.	Unit
Supply current[Note 1]	I_{DD1}	Operating mode	f_{XH} = 20 MHz, V_{DD} = 5.0 V [Note 2]	Square wave input		3.2	5.5	mA
				Resonator connection		4.5	6.9	mA
			f_{XH} = 10 MHz, V_{DD} = 5.0 V [Notes 2, 3]	Square wave input		1.6	2.8	mA
				Resonator connection		2.3	3.9	mA
			f_{XH} = 10 MHz V_{DD} = 3.0 V [Notes 2, 3]	Square wave input		1.5	2.7	mA
				Resonator connection		2.2	3.2	mA
			f_{XH} = 5 MHz, V_{DD} = 3.0 V [Notes 2, 3]	Square wave input		0.9	1.6	mA
				Resonator connection		1.3	2.0	mA
			f_{XH} = 5 MHz, V_{DD} = 2.0 V [Notes 2, 3]	Square wave input		0.7	1.4	mA
				Resonator connection		1.0	1.6	mA
			f_{RH} = 8 MHz, V_{DD} = 5.0 V [Note 4]			1.4	2.5	mA
			f_{SUB} = 32.768 kHz, V_{DD} = 5.0 V [Note 5]	Square wave input		6	30	μA
				Resonator connection		15	35	μA
	I_{DD2}	HALT mode	f_{XH} = 20 MHz, V_{DD} = 5.0 V [Note 2]	Square wave input		0.8	2.6	mA
				Resonator connection		2.0	4.4	mA
			f_{XH} = 10 MHz, V_{DD} = 5.0 V [Notes 2, 3]	Square wave input		0.4	1.3	mA
				Resonator connection		1.0	2.4	mA
			f_{XH} = 5 MHz, V_{DD} = 3.0 V [Notes 2, 3]	Square wave input		0.2	0.65	mA
				Resonator connection		0.5	1.1	mA
			f_{RH} = 8 MHz, V_{DD} = 5.0 V [Note 4]			0.4	1.2	mA
			f_{SUB} = 32.768 kHz, V_{DD} = 5.0 V [Note 5]	Square wave input		3.0	27	μA
				Resonator connection		12	32	μA
	I_{DD3}[Note 6]	STOP mode				1	20	μA
			T_A = −40 to +70 °C			1	10	μA
A/D converter operating current	I_{ADC}[Note 7]	2.3 V ≤ AV_{REF} ≤ V_{DD}, ADCS = 1				0.86	1.9	mA
Watchdog timer operating current	I_{WDT}[Note 8]	During 240 kHz internal low-speed oscillation clock operation				5	10	μA
LVI operating current	I_{LVI}[Note 9]					9	18	μA

Remarks 1. f_{XH}: High-speed system clock frequency (X1 clock oscillation frequency or external main system clock frequency)

2. f_{RH}: Internal high-speed oscillation clock frequency

3. f_{SUB}: Subsystem clock frequency (XT1 clock oscillation frequency or external subsystem clock frequency)

(Notes on next page)

Notes 1. Total current flowing into the internal power supply (V_{DD}, EV_{DD}), including the peripheral operation current and the input leakage current flowing when the level of the input pin is fixed to V_{DD} or V_{SS}. However, the current flowing into the pull-up resistors and the output current of the port are not included.

2. Not including the operating current of the 8 MHz internal oscillator, 240 kHz internal oscillator, and XT1 oscillator, and the current flowing into the A/D converter, watchdog timer and LVI circuit.

3. When AMPH (bit 0 of clock operation mode select register (OSCCTL)) = 0.

4. Not including the operating current of the X1 oscillator, XT1 oscillator, and 240 kHz internal oscillator, and the current flowing into the A/D converter, watchdog timer and LVI circuit.

5. Not including the operating current of the X1 oscillation, 8 MHz internal oscillator and 240 kHz internal oscillator, and the current flowing into the A/D converter, watchdog timer and LVI circuit.

6. Not including the operating current of the 240 kHz internal oscillator and XT1 oscillation, and the current flowing into the A/D converter, watchdog timer and LVI circuit.

7. Current flowing only to the A/D converter (AV_{REF}). The current value of the 78K0/Kx2 microcontrollers is the sum of I_{DD1} or I_{DD2} and I_{ADC} when the A/D converter operates in an operation mode or the HALT mode.

8. Current flowing only to the watchdog timer (including the operating current of the 240 kHz internal oscillator). The current value of the 78K0/Kx2 microcontrollers is the sum of I_{DD1}, I_{DD2} or I_{DD3} and I_{WDT} when the watchdog timer operates.

9. Current flowing only to the LVI circuit. The current value of the 78K0/Kx2 microcontrollers is the sum of I_{DD1}, I_{DD2} or I_{DD3} and I_{LVI} when the LVI circuit operates.

Caution The pins mounted depend on the product. Refer to Caution at the beginning of this chapter.

AC Characteristics

(1) Basic operation (1/2)

(T_A = –40 to +85°C, 1.8 V ≤ V_{DD} = EV_{DD} ≤ 5.5 V, AV_{REF} ≤ V_{DD}, V_{SS} = EV_{SS} = AV_{SS} = 0 V)

Parameter	Symbol	Conditions			MIN.	TYP.	MAX.	Unit
Instruction cycle (minimum instruction execution time)	T_{CY}	Main system clock (f_{XP}) operation	Conventional-specification Products (μPD78F05xx (A))	4.0 V ≤ V_{DD} ≤ 5.5 V	0.1		32	μs
				2.7 V ≤ V_{DD} < 4.0 V	0.2		32	μs
				1.8 V ≤ V_{DD} < 2.7 V	0.4 Note 1		32	μs
			Expanded-specification Products (μPD78F05xxA (A))	2.7 V ≤ V_{DD} ≤ 5.5 V	0.1		32	μs
				1.8 V ≤ V_{DD} < 2.7 V	0.4 Note 1		32	μs
		Subsystem clock (f_{SUB}) operation Note 2			114	122	125	μs
Peripheral hardware clock frequency	f_{PRS}	f_{PRS} = f_{XH} (XSEL = 1)	Conventional-specification Products (μPD78F05xx (A))	4.0 V ≤ V_{DD} ≤ 5.5 V			20	MHz
				2.7 V ≤ V_{DD} < 4.0 V			10	MHz
				1.8 V ≤ V_{DD} < 2.7 V			5	MHz
			Expanded-specification Products (μPD78F05xxA (A))	4.0 V ≤ V_{DD} ≤ 5.5 V			20	MHz
				2.7 V ≤ V_{DD} < 4.0 V Note 3			20	MHz
				1.8 V ≤ V_{DD} < 2.7 V			5	MHz
		f_{PRS} = f_{RH} (XSEL = 0)		2.7 V ≤ V_{DD} ≤ 5.5 V	7.6		8.4	MHz
				1.8 V ≤ V_{DD} < 2.7 V Note 4	7.6		10.4	MHz
External main system clock frequency	f_{EXCLK}	Conventional-specification Products (μPD78F05xx(A))		4.0 V ≤ V_{DD} ≤ 5.5 V	1.0 Note 5		20.0	MHz
				2.7 V ≤ V_{DD} < 4.0 V	1.0 Note 5		10.0	MHz
				1.8 V ≤ V_{DD} < 2.7 V	1.0		5.0	MHz
		Expanded-specification Products (μPD78F05xxA(A))		2.7 V ≤ V_{DD} ≤ 5.5 V	1.0 Note 5		20.0	MHz
				1.8 V ≤ V_{DD} < 2.7 V	1.0		5.0	MHz
External main system clock input high-level width, low-level width	t_{EXCLKH}, t_{EXCLKL}	Conventional-specification Products (μPD78F05xx(A))		4.0 V ≤ V_{DD} ≤ 5.5 V	24			ns
				2.7 V ≤ V_{DD} < 4.0 V	48			ns
				1.8 V ≤ V_{DD} < 2.7 V	96			ns
		Expanded-specification Products (μPD78F05xxA(A))		2.7 V ≤ V_{DD} ≤ 5.5 V	24			ns
				1.8 V ≤ V_{DD} < 2.7 V	96			ns

Notes 1. 0.38 μs when operating with the 8 MHz internal oscillator.

2. The 78K0/KB2 is not provided with a subsystem clock.

3. Characteristics of the main system clock frequency. Set the division clock to be set by a peripheral function to f_{XH}/2 (10 MHz) or less. The multiplier/divider, however, can operate on f_{XH} (20 MHz).

4. Characteristics of the main system clock frequency. Set the division clock to be set by a peripheral function to f_{RH}/2 or less.

5. 2.0 MHz (MIN.) when using UART6 during on-board programming.

Caution The pins mounted depend on the product. Refer to Caution 2 at the beginning of this chapter.

(1) Basic operation (2/2)

(T_A = –40 to +85°C, 1.8 V ≤ V_{DD} = EV_{DD} ≤ 5.5 V, AV_{REF} ≤ V_{DD}, V_{SS} = EV_{SS} = AV_{SS} = 0 V)

Parameter	Symbol	Conditions	MIN.	TYP.	MAX.	Unit
External subsystem clock frequency[Note 1]	f_{EXCLKS}		32	32.768	35	kHz
External subsystem clock input high-level width, low-level width[Note 1]	$t_{EXCLKSH}$, $t_{EXCLKSL}$		12			μs
TI000, TI010, TI001, TI011 input high-level width, low-level width	t_{TIH0}, t_{TIL0}	4.0 V ≤ V_{DD} ≤ 5.5 V	$2/f_{sam}$ + 0.1[Note 2]			μs
		2.7 V ≤ V_{DD} < 4.0 V	$2/f_{sam}$ + 0.2[Note 2]			μs
		1.8 V ≤ V_{DD} < 2.7 V	$2/f_{sam}$ + 0.5[Note 2]			μs
TI50, TI51 input frequency	f_{TI5}	4.0 V ≤ V_{DD} ≤ 5.5 V			10	MHz
		2.7 V ≤ V_{DD} < 4.0 V			10	MHz
		1.8 V ≤ V_{DD} < 2.7 V			5	MHz
TI50, TI51 input high-level width, low-level width	t_{TIH5}, t_{TIL5}	4.0 V ≤ V_{DD} ≤ 5.5 V	50			ns
		2.7 V ≤ V_{DD} < 4.0 V	50			ns
		1.8 V ≤ V_{DD} < 2.7 V	100			ns
Interrupt input high-level width, low-level width	t_{INTH}, t_{INTL}		1			μs
Key interrupt input low-level width	t_{KR}		250			ns
$\overline{RESET}$ low-level width	t_{RSL}		10			μs

Notes 1. The 78K0/KB2 is not provided with a subsystem clock.

2. Selection of f_{sam} = f_{PRS}, $f_{PRS}/4$, $f_{PRS}/256$, or f_{PRS}, $f_{PRS}/16$, $f_{PRS}/64$ is possible using bits 0 and 1 (PRM000, PRM001 or PRM010, PRM011) of prescaler mode registers 00 and 01 (PRM00, PRM01). Note that when selecting the TI000 or TI001 valid edge as the count clock, f_{sam} = f_{PRS}.

Caution The pins mounted depend on the product. Refer to Caution at the beginning of this chapter.

T_{CY} vs. V_{DD} (Main System Clock Operation)

<1> Conventional-specification Products (μPD78F05xx(A))

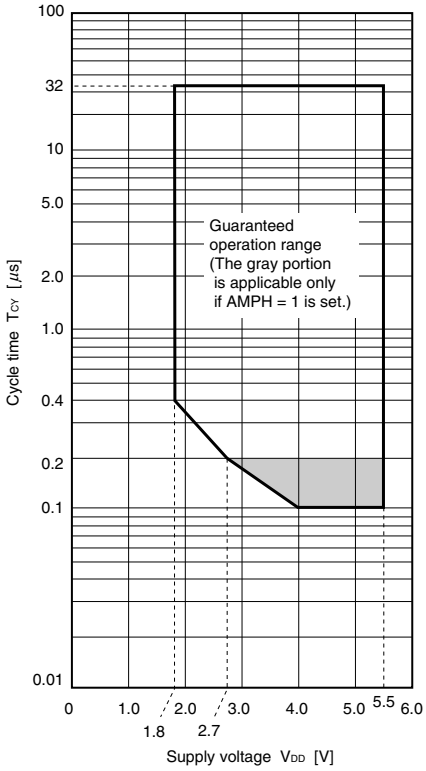

<2> Expanded-specification Products (μPD78F05xxA(A))

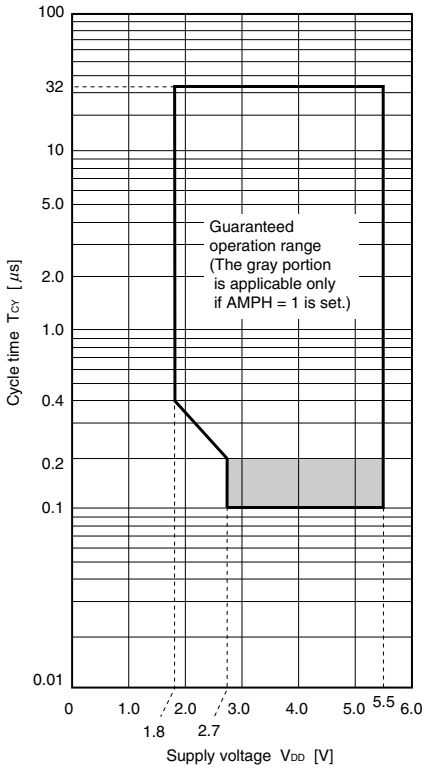

Caution The pins mounted depend on the product. Refer to Caution at the beginning of this chapter.

AC Timing Test Points

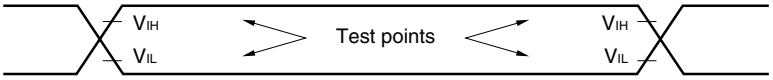

External Main System Clock Timing, External Subsystem Clock Timing

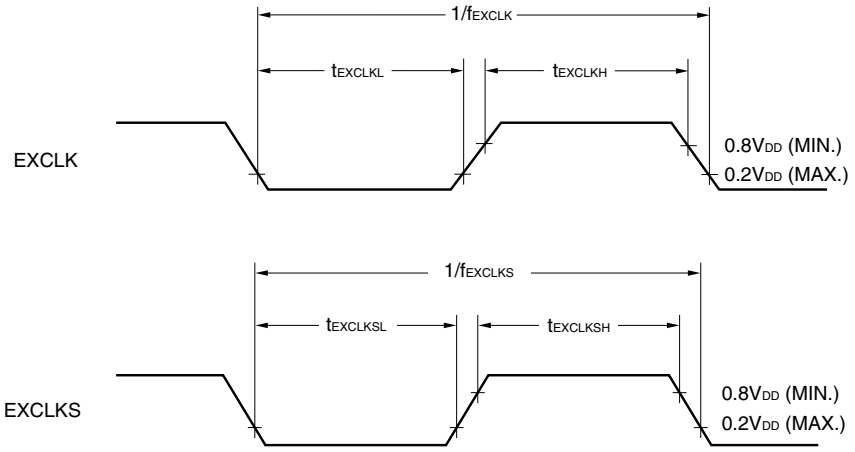

Caution The pins mounted depend on the product. Refer to Caution at the beginning of this chapter.

TI Timing

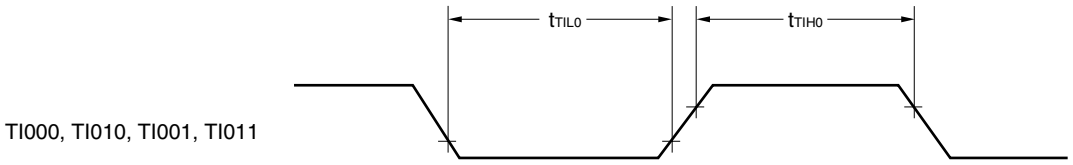

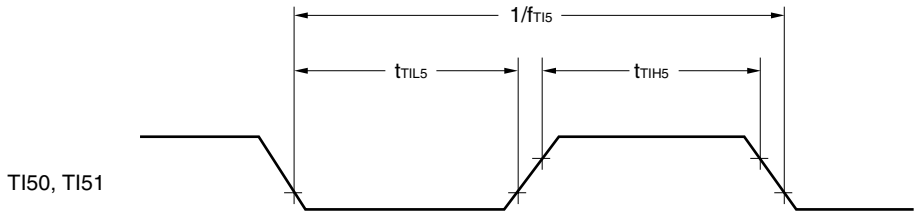

Interrupt Request Input Timing

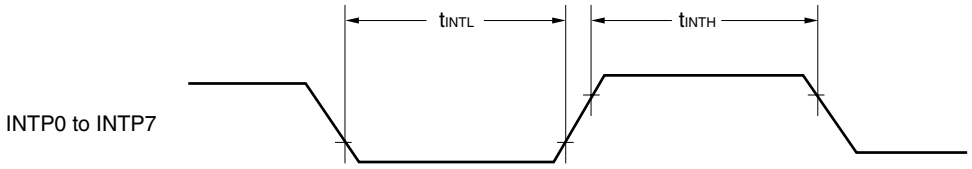

Key Interrupt Input Timing

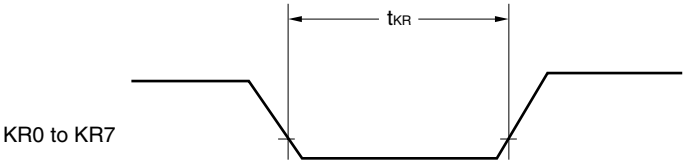

$\overline{\text{RESET}}$ Input Timing

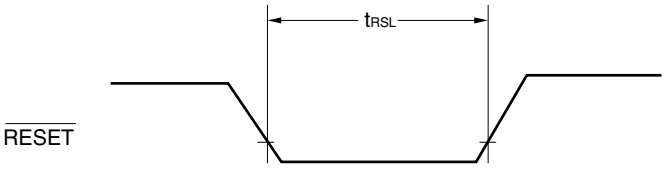

Caution The pins mounted depend on the product. Refer to Caution at the beginning of this chapter.

(2) Serial interface

(T_A = –40 to +85°C, 1.8 V ≤ V_{DD} = EV_{DD} ≤ 5.5 V, AV_{REF} ≤ V_{DD}, V_{SS} = EV_{SS} = AV_{SS} = 0 V)

(a) UART6 (dedicated baud rate generator output)

Parameter	Symbol	Conditions	MIN.	TYP.	MAX.	Unit
Transfer rate					625	kbps

(b) UART0 (dedicated baud rate generator output)

Parameter	Symbol	Conditions	MIN.	TYP.	MAX.	Unit
Transfer rate					625	kbps

(c) IIC0

Parameter	Symbol	Conditions	Standard Mode		High-Speed Mode		Unit
			MIN.	MAX.	MIN.	MAX.	
SCL0 clock frequency	f_{SCL}		0	100	0	400	kHz
Setup time of restart condition	$t_{SU:STA}$		4.7	–	0.6	–	μs
Hold time[Note 1]	$t_{HD:STA}$		4.0	–	0.6	–	μs
Hold time when SCL0 = "L"	t_{LOW}	Internal clock operation	4.7	–	1.3	–	μs
		EXSCL0 clock (6.4 MHz) operation	4.7	–	1.25	–	μs
Hold time when SCL0 = "H"	t_{HIGH}		4.0	–	0.6	–	μs
Data setup time (reception)	$t_{SU:DAT}$		250	–	100	–	ns
Data hold time (transmission)[Note 2]	$t_{HD:DAT}$	$f_W = f_{XH}/2^N$ or $f_W = f_{EXSCL0}$ selected[Note 3]	0	3.45	0	0.9[Note 4]	μs
						1.00[Note 5]	
		$f_W = f_{RH}/2^N$ selected[Note 3]	0	3.45	0	1.05	μs
Setup time of stop condition	$t_{SU:STO}$		4.0	–	0.6	–	μs
Bus free time	t_{BUF}		4.7	–	1.3	–	μs

Notes 1. The first clock pulse is generated after this period when the start/restart condition is detected.

2. The maximum value (MAX.) of $t_{HD:DAT}$ is during normal transfer and a wait state is inserted in the $\overline{ACK}$ (acknowledge) timing.

3. f_W indicates the IIC0 transfer clock selected by the IICCL and IICX0 registers.

4. When $f_W \geq 4.4$ MHz is selected

5. When $f_W < 4.4$ MHz is selected

Caution The pins mounted depend on the product. Refer to Caution at the beginning of this chapter.

(d) CSI1n (master mode, $\overline{SCK1n}$... internal clock output)

Parameter	Symbol	Conditions	MIN.	TYP.	MAX.	Unit
$\overline{SCK1n}$ cycle time	t_{KCY1}	$4.0\ V \le V_{DD} \le 5.5\ V$	200			ns
		$2.7\ V \le V_{DD} < 4.0\ V$	400			ns
		$1.8\ V \le V_{DD} < 2.7\ V$	600			ns
$\overline{SCK1n}$ high-/low-level width	t_{KH1}, t_{KL1}	$4.0\ V \le V_{DD} \le 5.5\ V$	$t_{KCY1}/2 - 20$ Note 1			ns
		$2.7\ V \le V_{DD} < 4.0\ V$	$t_{KCY1}/2 - 30$ Note 1			ns
		$1.8\ V \le V_{DD} < 2.7\ V$	$t_{KCY1}/2 - 60$ Note 1			ns
SI1n setup time (to $\overline{SCK1n}\uparrow$)	t_{SIK1}	$4.0\ V \le V_{DD} \le 5.5\ V$	70			ns
		$2.7\ V \le V_{DD} < 4.0\ V$	100			ns
		$1.8\ V \le V_{DD} < 2.7\ V$	190			ns
SI1n hold time (from $\overline{SCK1n}\uparrow$)	t_{KSI1}		30			ns
Delay time from $\overline{SCK1n}\downarrow$ to SO1n output	t_{KSO1}	C = 50 pF Note 2			40	ns

Notes 1. This value is when high-speed system clock (f_{XH}) is used.

2. C is the load capacitance of the $\overline{SCK1n}$ and SO1n output lines.

(e) CSI1n (slave mode, $\overline{SCK1n}$... external clock input)

Parameter	Symbol	Conditions		MIN.	TYP.	MAX.	Unit
$\overline{SCK1n}$ cycle time	t_{KCY2}			400			ns
$\overline{SCK1n}$ high-/low-level width	t_{KH2}, t_{KL2}			$t_{KCY2}/2$			ns
SI1n setup time (to $\overline{SCK1n}\uparrow$)	t_{SIK2}			80			ns
SI1n hold time (from $\overline{SCK1n}\uparrow$)	t_{KSI2}			50			ns
Delay time from $\overline{SCK1n}\downarrow$ to SO1n output	t_{KSO2}	C = 50 pF Note	$4.0\ V \le V_{DD} \le 5.5\ V$			120	ns
			$2.7\ V \le V_{DD} < 4.0\ V$			120	ns
			$1.8\ V \le V_{DD} < 2.7\ V$			180	ns

Note C is the load capacitance of the SO1n output line.

Remark n = 0, 1

Caution The pins mounted depend on the product. Refer to Caution at the beginning of this chapter.

(f) CSIA0 (master mode, $\overline{\text{SCKA0}}$…internal clock output)

Parameter	Symbol	Conditions		MIN.	TYP.	MAX.	Unit
$\overline{\text{SCKA0}}$ cycle time	t_{KCY3}	4.0 V ≤ V_{DD} ≤ 5.5 V		600			ns
		2.7 V ≤ V_{DD} < 4.0 V		1200			ns
		1.8 V ≤ V_{DD} < 2.7 V		1800			ns
$\overline{\text{SCKA0}}$ high-/low-level width	t_{KH3}, t_{KL3}	4.0 V ≤ V_{DD} ≤ 5.5 V		$t_{KCY3}/2 - 50$			ns
		2.7 V ≤ V_{DD} < 4.0 V		$t_{KCY3}/2 - 100$			ns
		1.8 V ≤ V_{DD} < 2.7 V		$t_{KCY3}/2 - 200$			ns
SIA0 setup time (to $\overline{\text{SCKA0}}$↑)	t_{SIK3}	2.7 V ≤ V_{DD} ≤ 5.5 V		100			ns
		1.8 V ≤ V_{DD} < 2.7 V		200			ns
SIA0 hold time (from $\overline{\text{SCKA0}}$↑)	t_{KSI3}			300			ns
Delay time from $\overline{\text{SCKA0}}$↓ to SOA0 output	t_{KSO3}	C = 100 pF[Note]	4.0 V ≤ V_{DD} ≤ 5.5 V			200	ns
			2.7 V ≤ V_{DD} < 4.0 V			300	ns
			1.8 V ≤ V_{DD} < 2.7 V			400	ns
Time from $\overline{\text{SCKA0}}$↑ to STB0↑	t_{SBD}			$t_{KCY3}/2 - 100$			ns
Strobe signal high-level width	t_{SBW}	4.0 V ≤ V_{DD} ≤ 5.5 V		$t_{KCY3} - 30$			ns
		2.7 V ≤ V_{DD} < 4.0 V		$t_{KCY3} - 60$			ns
		1.8 V ≤ V_{DD} < 2.7 V		$t_{KCY3} - 120$			ns
Busy signal setup time (to busy signal detection timing)	t_{BYS}	2.7 V ≤ V_{DD} ≤ 5.5 V		100			ns
		1.8 V ≤ V_{DD} < 2.7 V		200			ns
Busy signal hold time (from busy signal detection timing)	t_{BYH}			100			ns
Time from busy inactive to $\overline{\text{SCKA0}}$↓	t_{SPS}	4.0 V ≤ V_{DD} ≤ 5.5 V				$2t_{KCY3} + 100$	ns
		2.7 V ≤ V_{DD} < 4.0 V				$2t_{KCY3} - 150$	ns
		1.8 V ≤ V_{DD} < 2.7 V				$2t_{KCY3} - 200$	ns

Note C is the load capacitance of the $\overline{\text{SCKA0}}$ and SOA0 output lines.

Caution The pins mounted depend on the product. Refer to Caution at the beginning of this chapter.

(g) CSIA0 (slave mode, $\overline{SCKA0}$…external clock input)

Parameter	Symbol	Conditions		MIN.	TYP.	MAX.	Unit
$\overline{SCKA0}$ cycle time	t_{KCY4}	4.0 V ≤ V_{DD} ≤ 5.5 V		600			ns
		2.7 V ≤ V_{DD} < 4.0 V		1200			ns
		1.8 V ≤ V_{DD} < 2.7 V		1800			ns
$\overline{SCKA0}$ high-/low-level width	t_{KH4}, t_{KL4}	4.0 V ≤ V_{DD} ≤ 5.5 V		300			ns
		2.7 V ≤ V_{DD} < 4.0 V		600			ns
		1.8 V ≤ V_{DD} < 2.7 V		900			ns
SIA0 setup time (to $\overline{SCKA0}$↑)	t_{SIK4}			100			ns
SIA0 hold time (from $\overline{SCKA0}$↑)	t_{KSI4}			$2/f_W$ + 100 Note 1			ns
Delay time from $\overline{SCKA0}$↓ to SOA0 output	t_{KSO4}	C = 100 pF Note 2	4.0 V ≤ V_{DD} ≤ 5.5 V			$2/f_W$ + 100 Note 1	ns
			2.7 V ≤ V_{DD} < 4.0 V			$2/f_W$ + 200 Note 1	ns
			1.8 V ≤ V_{DD} < 2.7 V			$2/f_W$ + 300 Note 1	ns
$\overline{SCKA0}$ rise/fall time	t_{R4}, t_{F4}					1000	ns

Notes 1. f_W is the CSIA0 base clock selected by the CSIS0 register.

2. C is the load capacitance of the SOA0 output line.

Caution The pins mounted depend on the product. Refer to Caution at the beginning of this chapter.

Serial Transfer Timing (1/2)

IIC0:

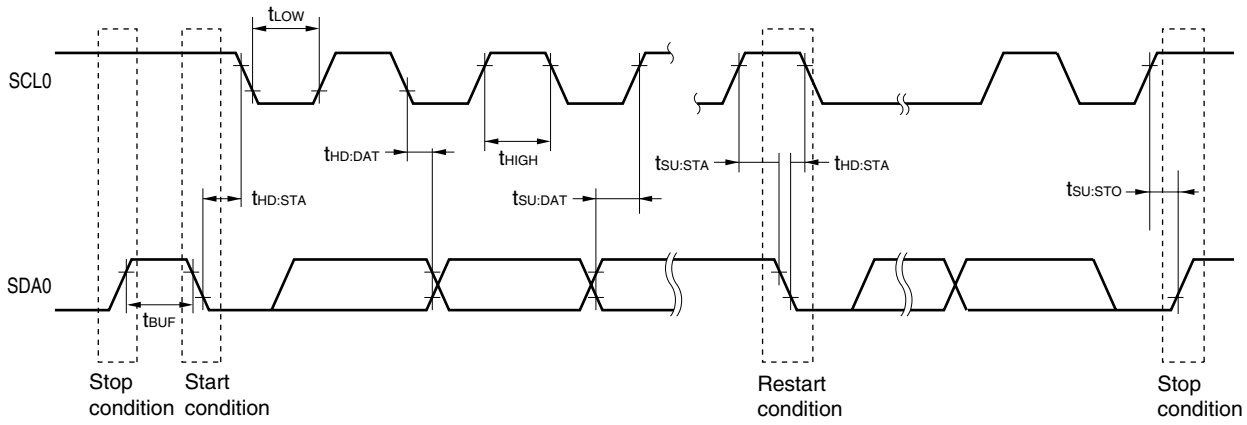

CSI1n:

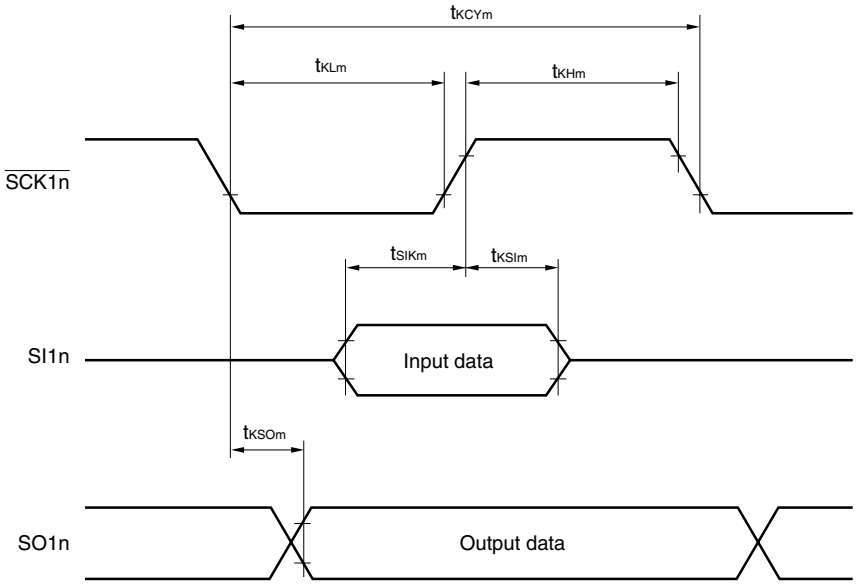

Remark m = 1, 2
n = 0, 1

Caution The pins mounted depend on the product. Refer to Caution at the beginning of this chapter.

Serial Transfer Timing (2/2)

CSIA0:

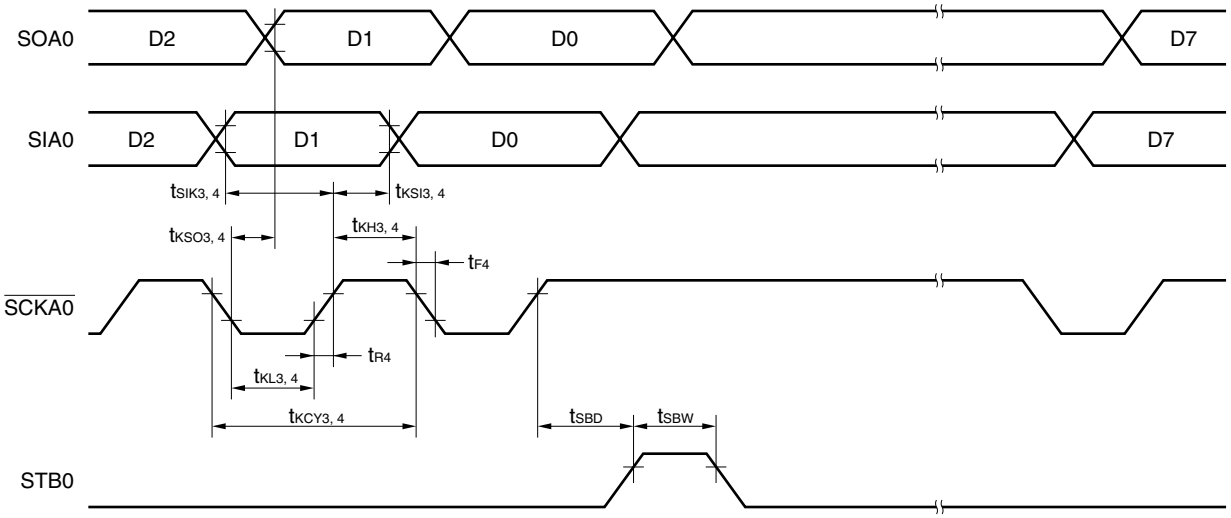

CSIA0 (busy processing):

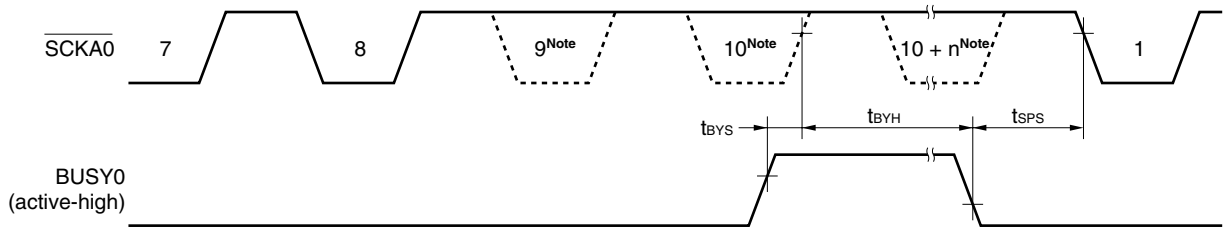

Note SCKA0 does not become low level here, but the timing is illustrated so that the timing specifications can be shown.

Caution The pins mounted depend on the product. Refer to Caution at the beginning of this chapter.

A/D Converter Characteristics

(T_A = –40 to +85°C, 2.3 V ≤ AV_{REF} ≤ V_{DD} = EV_{DD} ≤ 5.5 V, V_{SS} = EV_{SS} = AV_{SS} = 0 V)

Parameter	Symbol	Conditions		MIN.	TYP.	MAX.	Unit
Resolution	R_{ES}					10	bit
Overall error[Notes 1, 2]	A_{INL}	4.0 V ≤ AV_{REF} ≤ 5.5 V				±0.4	%FSR
		2.7 V ≤ AV_{REF} < 4.0 V				±0.6	%FSR
		2.3 V ≤ AV_{REF} < 2.7 V				±1.2	%FSR
Conversion time	t_{CONV}	Conventional-specification Products (μPD78F05xx(A))	4.0 V ≤ AV_{REF} ≤ 5.5 V	6.1		36.7	μs
			2.7 V ≤ AV_{REF} < 4.0 V	12.2		36.7	μs
			2.3 V ≤ AV_{REF} < 2.7 V	27		66.6	μs
		Expanded-specification Products (μPD78F05xxA(A))	4.0 V ≤ AV_{REF} ≤ 5.5 V	6.1		66.6	μs
			2.7 V ≤ AV_{REF} < 4.0 V	12.2		66.6	μs
			2.3 V ≤ AV_{REF} < 2.7 V	27		66.6	μs
Zero-scale error[Notes 1, 2]	E_{ZS}	4.0 V ≤ AV_{REF} ≤ 5.5 V				±0.4	%FSR
		2.7 V ≤ AV_{REF} < 4.0 V				±0.6	%FSR
		2.3 V ≤ AV_{REF} < 2.7 V				±0.6	%FSR
Full-scale error[Notes 1, 2]	E_{FS}	4.0 V ≤ AV_{REF} ≤ 5.5 V				±0.4	%FSR
		2.7 V ≤ AV_{REF} < 4.0 V				±0.6	%FSR
		2.3 V ≤ AV_{REF} < 2.7 V				±0.6	%FSR
Integral non-linearity error[Note 1]	I_{LE}	4.0 V ≤ AV_{REF} ≤ 5.5 V				±2.5	LSB
		2.7 V ≤ AV_{REF} < 4.0 V				±4.5	LSB
		2.3 V ≤ AV_{REF} < 2.7 V				±6.5	LSB
Differential non-linearity error[Note 1]	D_{LE}	4.0 V ≤ AV_{REF} ≤ 5.5 V				±1.5	LSB
		2.7 V ≤ AV_{REF} < 4.0 V				±2.0	LSB
		2.3 V ≤ AV_{REF} < 2.7 V				±2.0	LSB
Analog input voltage	V_{AIN}			AV_{SS}		AV_{REF}	V

Notes 1. Excludes quantization error (±1/2 LSB).

2. This value is indicated as a ratio (%FSR) to the full-scale value.

Caution The pins mounted depend on the product. Refer to Caution at the beginning of this chapter.

1.59 V POC Circuit Characteristics (T_A = –40 to +85°C, V_{SS} = EV_{SS} = 0 V)

Parameter	Symbol	Conditions	MIN.	TYP.	MAX.	Unit
Detection voltage	V_{POC}		1.44	1.59	1.74	V
Power supply voltage rise inclination	t_{PTH}	V_{DD}: 0 V → change inclination of V_{POC}	0.5			V/ms
Minimum pulse width	t_{PW}		200			μs

1.59 V POC Circuit Timing

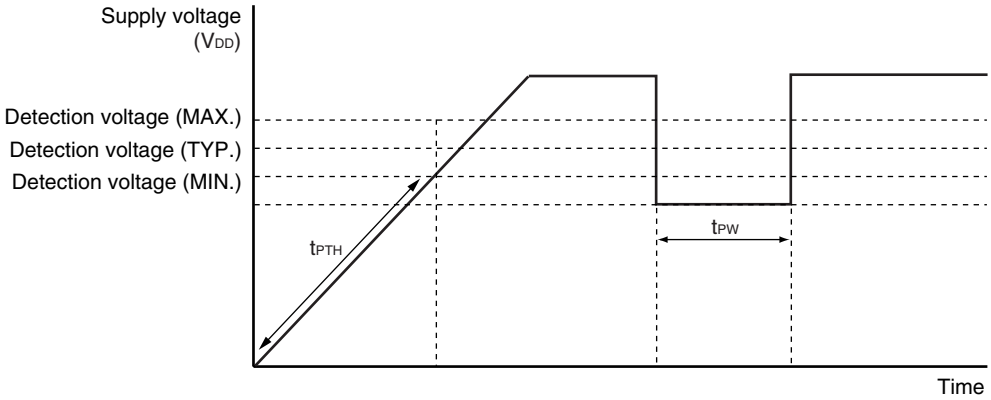

Caution The pins mounted depend on the product. Refer to Caution at the beginning of this chapter.

Supply Voltage Rise Time (T_A = –40 to +85°C, V_{SS} = EV_{SS} = 0 V)

Parameter	Symbol	Conditions	MIN.	TYP.	MAX.	Unit
Maximum time to rise to 1.8 V (V_{DD} (MIN.)) (V_{DD}: 0 V → 1.8 V)	t_{PUP1}	POCMODE (option byte) = 0, when $\overline{RESET}$ input is not used			3.6	ms
Maximum time to rise to 1.8 V (V_{DD} (MIN.)) (releasing $\overline{RESET}$ input → V_{DD}: 1.8 V)	t_{PUP2}	POCMODE (option byte) = 0, when $\overline{RESET}$ input is used			1.9	ms

Supply Voltage Rise Time Timing

• When $\overline{RESET}$ pin input is not used

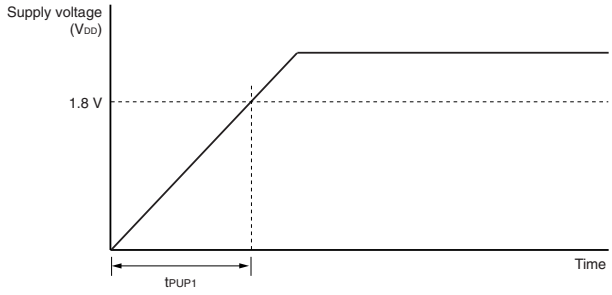

• When $\overline{RESET}$ pin input is used

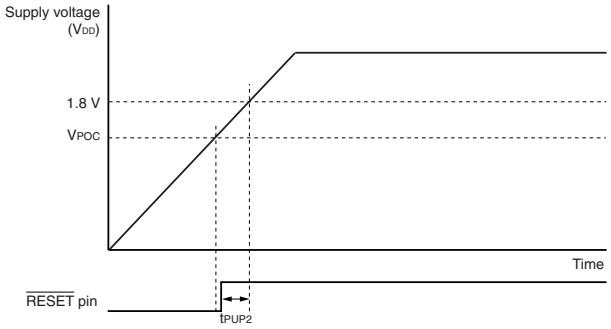

2.7 V POC Circuit Characteristics (T_A = –40 to +85°C, V_{SS} = EV_{SS} = 0 V)

Parameter	Symbol	Conditions	MIN.	TYP.	MAX.	Unit
Detection voltage on application of supply voltage	V_{DDPOC}	POCMODE (option bye) = 1	2.50	2.70	2.90	V

Remark The operations of the POC circuit are as described below, depending on the POCMODE (option byte) setting.

Option Byte Setting	POC Mode	Operation
POCMODE = 0	1.59 V mode operation	A reset state is retained until V_{POC} = 1.59 V (TYP.) is reached after the power is turned on, and the reset is released when V_{POC} is exceeded. After that, POC detection is performed at V_{POC}, similarly as when the power was turned on. The power supply voltage must be raised at a time of t_{PUP1} or t_{PUP2} when POCMODE is 0.
POCMODE = 1	2.7 V/1.59 V mode operation	A reset state is retained until V_{DDPOC} = 2.7 V (TYP.) is reached after the power is turned on, and the reset is released when V_{DDPOC} is exceeded. After that, POC detection is performed at V_{POC} = 1.59 V (TYP.) and not at V_{DDPOC}. The use of the 2.7 V/1.59 V POC mode is recommended when the rise of the voltage, after the power is turned on and until the voltage reaches 1.8 V, is more relaxed than t_{PTH}.

Caution The pins mounted depend on the product. Refer to Caution at the beginning of this chapter.

LVI Circuit Characteristics (T_A = –40 to +85°C, $V_{POC} \le V_{DD} = EV_{DD} \le 5.5$ V, $AV_{REF} \le V_{DD}$, $V_{SS} = EV_{SS}$ = 0 V)

Parameter		Symbol	Conditions	MIN.	TYP.	MAX.	Unit
Detection voltage	Supply voltage level	V_{LVI0}		4.14	4.24	4.34	V
		V_{LVI1}		3.99	4.09	4.19	V
		V_{LVI2}		3.83	3.93	4.03	V
		V_{LVI3}		3.68	3.78	3.88	V
		V_{LVI4}		3.52	3.62	3.72	V
		V_{LVI5}		3.37	3.47	3.57	V
		V_{LVI6}		3.22	3.32	3.42	V
		V_{LVI7}		3.06	3.16	3.26	V
		V_{LVI8}		2.91	3.01	3.11	V
		V_{LVI9}		2.75	2.85	2.95	V
		V_{LVI10}		2.60	2.70	2.80	V
		V_{LVI11}		2.45	2.55	2.65	V
		V_{LVI12}		2.29	2.39	2.49	V
		V_{LVI13}		2.14	2.24	2.34	V
		V_{LVI14}		1.98	2.08	2.18	V
		V_{LVI15}		1.83	1.93	2.03	V
	External input pin[Note 1]	EXLVI	EXLVI < V_{DD}, 1.8 V ≤ V_{DD} ≤ 5.5 V	1.11	1.21	1.31	V
Minimum pulse width		t_{LW}		200			μs
Operation stabilization wait time[Note 2]		t_{LWAIT}		10			μs

Notes 1. The EXLVI/P120/INTP0 pin is used.

2. Time required from setting bit 7 (LVION) of the low-voltage detection register (LVIM) to 1 to operation stabilization

Remark $V_{LVI(n-1)} > V_{LVIn}$: n = 1 to 15

LVI Circuit Timing

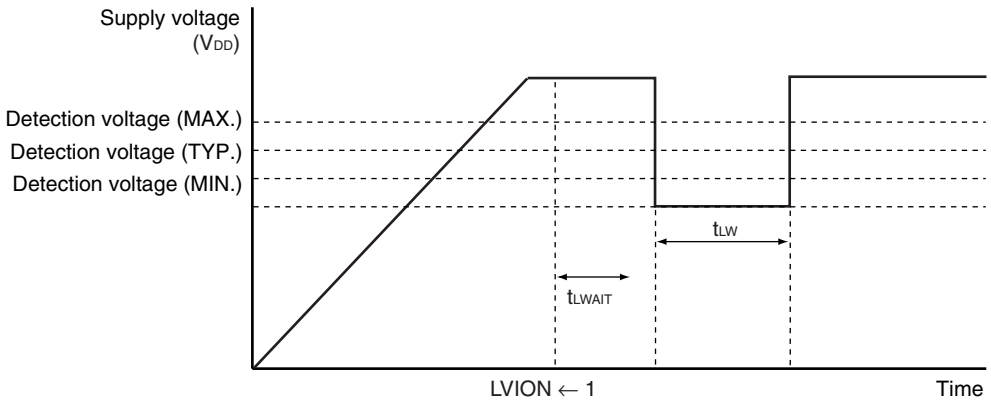

Caution The pins mounted depend on the product. Refer to Caution at the beginning of this chapter.

Data Memory STOP Mode Low Supply Voltage Data Retention Characteristics (T_A = –40 to +85°C)

Parameter	Symbol	Conditions	MIN.	TYP.	MAX.	Unit
Data retention supply voltage	V_{DDDR}		1.44[Note]		5.5	V

Note The value depends on the POC detection voltage. When the voltage drops, the data is retained until a POC reset is effected, but data is not retained when a POC reset is effected.

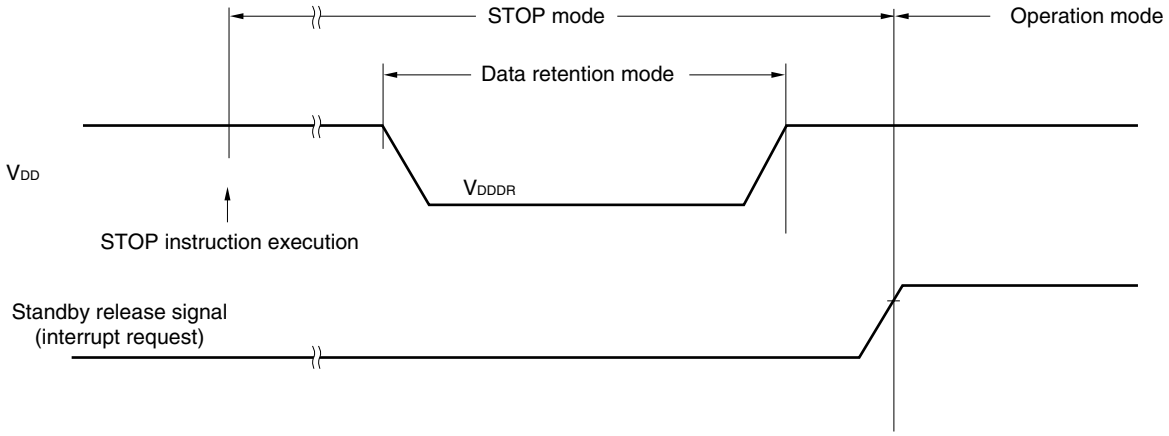

Caution The pins mounted depend on the product. Refer to Caution at the beginning of this chapter.

Flash Memory Programming Characteristics

(T_A = –40 to +85°C, 2.7 V ≤ V_{DD} = EV_{DD} ≤ 5.5 V, AV_{REF} ≤ V_{DD}, V_{SS} = EV_{SS} = AV_{SS} = 0 V)

- **Basic characteristics**

Parameter		Symbol	Conditions				MIN.	TYP.	MAX.	Unit
V_{DD} supply current		I_{DD}	f_{XP} = 10 MHz (TYP.), 20 MHz (MAX.)					4.5	11.0	mA
Erase time Notes 1, 2	All block	T_{eraca}						20	200	ms
	Block unit	T_{erasa}						20	200	ms
Write time (in 8-bit units) Note 1		T_{wrwa}						10	100	μs
Number of rewrites per chip		C_{erwr}	1 erase + 1 write after erase = 1 rewrite Note 3	Expanded-specification Products (μPD78F05xxA (A))	• When a flash memory programmer is used, and the libraries Note 4 provided by Renesas Electronics are used • For program update	Retention: 15 years	1000			Times
					• When the EEPROM emulation libraries Note 5 provided by Renesas Electronics are used • The rewritable ROM size: 4 KB • For data update	Retention: 5 years	10000			Times
				Expanded-specification Products (μPD78F05xxA (A))	Conditions other than the above Note 6	Retention: 10 years	100			Times
				Conventional-specification Products (μPD78F05xx (A))						

Notes 1. Characteristic of the flash memory. For the characteristic when a dedicated flash programmer, PG-FP4 or PG-FP5, is used and the rewrite time during self programming, see **Tables 27-12** to **27-14**.

2. The prewrite time before erasure and the erase verify time (writeback time) are not included.

3. When a product is first written after shipment, “erase → write” and “write only” are both taken as one rewrite.

4. The sample library specified by the **78K0/Kx2 Flash Memory Self Programming User’s Manual** (Document No.: **U17516E**) is excluded.

5. The sample program specified by the **78K0/Kx2 EEPROM Emulation Application Note** (Document No.: **U17517E**) is excluded.

6. These include when the sample library specified by the **78K0/Kx2 Flash Memory Self Programming User’s Manual** (Document No.: **U17516E**) and the sample program specified by **the 78K0/Kx2 EEPROM Emulation Application Note** (Document No.: **U17517E**) are used.

Remarks 1. f_{XP}: Main system clock oscillation frequency

2. For serial write operation characteristics, refer to **78K0/Kx2 Flash Memory Programming (Programmer) Application Note (**Document No.: **U17739E)**.

CHAPTER 32 ELECTRICAL SPECIFICATIONS ((A2) GRADE PRODUCTS: T_A = –40 to +110°C)

Target Products	Conventional-specification Products	Expanded-specification Products
78K0/KB2	μPD78F0500(A2), 78F0501(A2), 78F0502(A2), 78F0503(A2)	μPD78F0500A(A2), 78F0501A(A2), 78F0502A(A2), 78F0503A(A2)
78K0/KC2	μPD78F0511(A2), 78F0512(A2), 78F0513(A2), 78F0514(A2), 78F0515(A2)	μPD78F0511A(A2), 78F0512A(A2), 78F0513A(A2), 78F0514A(A2), 78F0515A(A2)
78K0/KD2	μPD78F0521(A2), 78F0522(A2), 78F0523(A2), 78F0524(A2), 78F0525(A2), 78F0526(A2), 78F0527(A2)	μPD78F0521A(A2), 78F0522A(A2), 78F0523A(A2), 78F0524A(A2), 78F0525A(A2), 78F0526A(A2), 78F0527A(A2)
78K0/KE2	μPD78F0531(A2), 78F0532(A2), 78F0533(A2), 78F0534(A2), 78F0535(A2), 78F0536(A2), 78F0537(A2)	μPD78F0531A(A2), 78F0532A(A2), 78F0533A(A2), 78F0534A(A2), 78F0535A(A2), 78F0536A(A2), 78F0537A(A2)
78K0/KF2	μPD78F0544(A2), 78F0545(A2), 78F0546(A2), 78F0547(A2)	μPD78F0544A(A2), 78F0545A(A2), 78F0546A(A2), 78F0547A(A2)

The following items are described separately for conventional-specification products (μPD78F05xx(A2)) and expanded-specification products (μPD78F05xxA(A2)).

- X1 clock oscillation frequency (**X1 oscillator characteristics**)
- Instruction cycle, peripheral hardware clock frequency, external main system clock frequency, external main system clock input high-level width, and external main system clock input low-level width (**(1) Basic operation** in **AC characteristics**)
- A/D conversion time (**A/D Converter Characteristics**)
- Number of rewrites per chip (**Flash Memory Programming Characteristics**)

Caution The pins mounted depend on the product as follows.

(1) Port functions

Port	78K0/KB2	78K0/KC2			78K0/KD2	78K0/KE2	78K0/KF2
	30/36 Pins	38 Pins	44 Pins	48 Pins	52 Pins	64 Pins	80 Pins
Port 0	P00, P01				P00 to P03	P00 to P06	
Port 1	P10 to P17						
Port 2	P20 to P23	P20 to P25	P20 to P27				
Port 3	P30 to P33						
Port 4	–		P40, P41			P40 to P43	P40 to P47
Port 5	–					P50 to P53	P50 to P57
Port 6	P60, P61	P60 to P63					P60 to P67
Port 7	–	P70, P71	P70 to P73	P70 to P75	P70 to P77		
Port 12	P120 to P122	P120 to P124					
Port 13	–			P130			
Port 14	–			P140		P140, P141	P140 to P145

(The remaining table is on the next page.)

(2) Non-port functions

Port		78K0/KB2	78K0/KC2			78K0/KD2	78K0/KE2	78K0/KF2
		30/36 Pins	38 Pins	44 Pins	48 Pins	52 Pins	64 Pins	80 Pins
Power supply, ground		V_{DD}, EV_{DD}[Note 1], V_{SS}, EV_{SS}[Note 1], AV_{REF}, AV_{SS}	V_{DD}, AV_{REF}, V_{SS}, AV_{SS}				V_{DD}, EV_{DD}, V_{SS}, EV_{SS}, AV_{REF}, AV_{SS}	
Regulator		REGC						
Reset		$\overline{\text{RESET}}$						
Clock oscillation		X1, X2, EXCLK	X1, X2, XT1, XT2, EXCLK, EXCLKS					
Writing to flash memory		FLMD0						
Interrupt		INTP0 to INTP5			INTP0 to INTP6		INTP0 to INTP7	
Key interrupt		–	KR0, KR1	KR0 to KR3		KR0 to KR7		
Timer	TM00	TI000, TI010, TO00						
	TM01	–					TI001[Note 2], TI011[Note 2], TO01[Note 2]	
	TM50	TI50, TO50						
	TM51	TI51, TO51						
	TMH0	TOH0						
	TMH1	TOH1						
Serial interface	UART0	RxD0, TxD0						
	UART6	RxD6, TxD6						
	IIC0	SCL0, SDA0	SCL0, SDA0, EXSCL0					
	CSI10	$\overline{\text{SCK10}}$, SI10, SO10						
	CSI11	–					$\overline{\text{SCK11}}$[Note 2], SI11[Note 2], SO11[Note 2], $\overline{\text{SSI11}}$[Note 2]	
	CSIA0	–						$\overline{\text{SCKA0}}$, SIA0, SOA0, BUSY0, STB0
A/D converter		ANI0 to ANI3	ANI0 to ANI5	ANI0 to ANI7				
Clock output		–			PCL			
Buzzer output		–					BUZ	
Low-voltage detector (LVI)		EXLVI						

Notes 1. This is not mounted onto 30-pin products.

2. This is not mounted onto the 78K0/KE2 products whose flash memory is less than 32 KB.

Caution The pins mounted depend on the product. Refer to Caution at the beginning of this chapter.

Absolute Maximum Ratings (T_A = 25°C) (1/2)

Parameter	Symbol	Conditions	Ratings	Unit
Supply voltage	V_{DD}		−0.5 to +6.5	V
	EV_{DD}		−0.5 to +6.5	V
	V_{SS}		−0.5 to +0.3	V
	EV_{SS}		−0.5 to +0.3	V
	AV_{REF}		−0.5 to V_{DD} + 0.3[Note]	V
	AV_{SS}		−0.5 to +0.3	V
REGC pin input voltage	V_{IREGC}		−0.5 to +3.6 and −0.5 to V_{DD}	V
Input voltage	V_{I1}	P00 to P06, P10 to P17, P20 to P27, P30 to P33, P40 to P47, P50 to P57, P64 to P67, P70 to P77, P120 to P124, P140 to P145, X1, X2, XT1, XT2, $\overline{\text{RESET}}$, FLMD0	−0.3 to V_{DD} + 0.3[Note]	V
	V_{I2}	P60 to P63 (N-ch open drain)	−0.3 to +6.5	V
Output voltage	V_O		−0.3 to V_{DD} + 0.3[Note]	V
Analog input voltage	V_{AN}	ANI0 to ANI7	−0.3 to AV_{REF} + 0.3[Note] and −0.3 to V_{DD} + 0.3[Note]	V

Note Must be 6.5 V or lower.

Caution Product quality may suffer if the absolute maximum rating is exceeded even momentarily for any parameter. That is, the absolute maximum ratings are rated values at which the product is on the verge of suffering physical damage, and therefore the product must be used under conditions that ensure that the absolute maximum ratings are not exceeded.

Remark Unless specified otherwise, the characteristics of alternate-function pins are the same as those of port pins.

Caution The pins mounted depend on the product. Refer to Caution at the beginning of this chapter.

Absolute Maximum Ratings (T_A = 25°C) (2/2)

Parameter	Symbol	Conditions		Ratings	Unit
Output current, high	I_{OH}	Per pin	P00 to P06, P10 to P17, P30 to P33, P40 to P47, P50 to P57, P64 to P67, P70 to P77, P120, P130, P140 to P145	−10	mA
		Total of all pins −80 mA	P00 to P04, P40 to P47, P120, P130, P140 to P145	−25	mA
			P05, P06, P10 to P17, P30 to P33, P50 to P57, P64 to P67, P70 to P77	−55	mA
		Per pin	P20 to P27	−0.5	mA
		Total of all pins		−2	mA
		Per pin	P121 to P124	−1	mA
		Total of all pins		−4	mA
Output current, low	I_{OL}	Per pin	P00 to P06, P10 to P17, P30 to P33, P40 to P47, P50 to P57, P60 to P67, P70 to P77, P120, P130, P140 to P145	30	mA
		Total of all pins 200 mA	P00 to P04, P40 to P47, P120, P130, P140 to P145	60	mA
			P05, P06, P10 to P17, P30 to P33, P50 to P57, P60 to P67, P70 to P77	140	mA
		Per pin	P20 to P27	1	mA
		Total of all pins		5	mA
		Per pin	P121 to P124	4	mA
		Total of all pins		10	mA
Operating ambient temperature	T_A			−40 to +110	°C
Storage temperature	T_{stg}			−65 to +150	°C

Cautions 1. Product quality may suffer if the absolute maximum rating is exceeded even momentarily for any parameter. That is, the absolute maximum ratings are rated values at which the product is on the verge of suffering physical damage, and therefore the product must be used under conditions that ensure that the absolute maximum ratings are not exceeded.

2. The value of the current that can be run per pin must satisfy the value of the current per pin and the total value of the currents of all pins.

Remark Unless specified otherwise, the characteristics of alternate-function pins are the same as those of port pins.

Caution The pins mounted depend on the product. Refer to Caution at the beginning of this chapter.

X1 Oscillator Characteristics

(T_A = –40 to +110°C, 2.7 V ≤ V_{DD} = EV_{DD} ≤ 5.5 V, V_{SS} = EV_{SS} = AV_{SS} = 0 V)

Resonator	Recommended Circuit	Parameter	Conditions		MIN.	TYP.	MAX.	Unit
Ceramic resonator, Crystal resonator	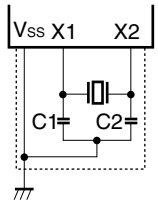	X1 clock oscillation frequency (f_X)Note 1	Conventional-specification Products (μPD78F05xx (A2))	4.0 V ≤ V_{DD} ≤ 5.5 V	1.0Note 2		20.0	MHz
				2.7 V ≤ V_{DD} < 4.0 V	1.0Note 2		10.0	
			Expanded-specification Products (μPD78F05xxA(A2))		1.0Note 2		20.0	MHz

Notes 1. Indicates only oscillator characteristics. Refer to **AC Characteristics** for instruction execution time.

2. It is 2.0 MHz (MIN.) when programming on the board via UART6.

Cautions 1. When using the X1 oscillator, wire as follows in the area enclosed by the broken lines in the above figures to avoid an adverse effect from wiring capacitance.

- **Keep the wiring length as short as possible.**
- **Do not cross the wiring with the other signal lines.**
- **Do not route the wiring near a signal line through which a high fluctuating current flows.**
- **Always make the ground point of the oscillator capacitor the same potential as V_{SS}.**
- **Do not ground the capacitor to a ground pattern through which a high current flows.**
- **Do not fetch signals from the oscillator.**

2. Since the CPU is started by the internal high-speed oscillation clock after a reset release, check the X1 clock oscillation stabilization time using the oscillation stabilization time counter status register (OSTC) by the user. Determine the oscillation stabilization time of the OSTC register and oscillation stabilization time select register (OSTS) after sufficiently evaluating the oscillation stabilization time with the resonator to be used.

Remark For the resonator selection and oscillator constant, customers are requested to either evaluate the oscillation themselves or apply to the resonator manufacturer for evaluation.

Caution The pins mounted depend on the product. Refer to Caution at the beginning of this chapter.

Internal Oscillator Characteristics

(T_A = –40 to +110°C, 2.7 V ≤ V_{DD} = EV_{DD} ≤ 5.5 V, V_{SS} = EV_{SS} = AV_{SS} = 0 V)

Resonator	Parameter	Conditions	MIN.	TYP.	MAX.	Unit
8 MHz internal oscillator	Internal high-speed oscillation clock frequency (f_{RH})[Note]	RSTS = 1	7.6	8.0	8.4	MHz
		RSTS = 0	2.48	5.6	9.86	MHz
240 kHz internal oscillator	Internal low-speed oscillation clock frequency (f_{RL})		216	240	264	kHz

Note Indicates only oscillator characteristics. Refer to **AC Characteristics** for instruction execution time.

Remark RSTS: Bit 7 of the internal oscillation mode register (RCM)

XT1 Oscillator Characteristics[Note 1]

(T_A = –40 to +110°C, 2.7 V ≤ V_{DD} = EV_{DD} ≤ 5.5 V, V_{SS} = EV_{SS} = AV_{SS} = 0 V)

Resonator	Recommended Circuit	Parameter	Conditions	MIN.	TYP.	MAX.	Unit
Crystal resonator	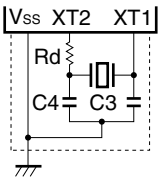	XT1 clock oscillation frequency (f_{XT})[Note 2]		32	32.768	35	kHz

Notes 1. The 78K0/KB2 is not provided with the XT1 oscillator.

2. Indicates only oscillator characteristics. Refer to **AC Characteristics** for instruction execution time.

Cautions 1. When using the XT1 oscillator, wire as follows in the area enclosed by the broken lines in the above figure to avoid an adverse effect from wiring capacitance.

- **Keep the wiring length as short as possible.**
- **Do not cross the wiring with the other signal lines.**
- **Do not route the wiring near a signal line through which a high fluctuating current flows.**
- **Always make the ground point of the oscillator capacitor the same potential as V_{SS}.**
- **Do not ground the capacitor to a ground pattern through which a high current flows.**
- **Do not fetch signals from the oscillator.**

2. The XT1 oscillator is designed as a low-amplitude circuit for reducing power consumption, and is more prone to malfunction due to noise than the X1 oscillator. Particular care is therefore required with the wiring method when the XT1 clock is used.

Remark For the resonator selection and oscillator constant, customers are requested to either evaluate the oscillation themselves or apply to the resonator manufacturer for evaluation.

Caution The pins mounted depend on the product. Refer to Caution at the beginning of this chapter.

DC Characteristics (1/4)

(T_A = −40 to +110°C, 2.7 V ≤ V_{DD} = EV_{DD} ≤ 5.5 V, AV_{REF} ≤ V_{DD}, V_{SS} = EV_{SS} = AV_{SS} = 0 V)

Parameter	Symbol	Conditions		MIN.	TYP.	MAX.	Unit
Output current, high[Note 1]	I_{OH1}	Per pin for P00 to P06, P10 to P17, P30 to P33, P40 to P47, P50 to P57, P64 to P67, P70 to P77, P120, P130, P140 to P145	4.0 V ≤ V_{DD} ≤ 5.5 V			−2.5	mA
			2.7 V ≤ V_{DD} < 4.0 V			−2.0	mA
		Total of P00 to P04, P40 to P47, P120, P130, P140 to P145[Note 3]	4.0 V ≤ V_{DD} ≤ 5.5 V			−7.5	mA
			2.7 V ≤ V_{DD} < 4.0 V			−6.0	mA
		Total of P05, P06, P10 to P17, P30 to P33, P50 to P57, P64 to P67, P70 to P77[Note 3]	4.0 V ≤ V_{DD} ≤ 5.5 V			−12.5	mA
			2.7 V ≤ V_{DD} < 4.0 V			−10.0	mA
		Total of all the pins above[Note 3]	4.0 V ≤ V_{DD} ≤ 5.5 V			−16.0	mA
			2.7 V ≤ V_{DD} < 4.0 V			−14.0	mA
	I_{OH2}	Per pin for P20 to P27	AV_{REF} = V_{DD}			−0.1	mA
		Per pin for P121 to P124				−0.1	mA
Output current, low[Note 2]	I_{OL1}	Per pin for P00 to P06, P10 to P17, P30 to P33, P40 to P47, P50 to P57, P64 to P67, P70 to P77, P120, P130, P140 to P145	4.0 V ≤ V_{DD} ≤ 5.5 V			5.0	mA
			2.7 V ≤ V_{DD} < 4.0 V			3.0	mA
		Per pin for P60 to P63	4.0 V ≤ V_{DD} ≤ 5.5 V			10.0	mA
			2.7 V ≤ V_{DD} < 4.0 V			3.0	mA
		Total of P00 to P04, P40 to P47, P120, P130, P140 to P145[Note 3]	4.0 V ≤ V_{DD} ≤ 5.5 V			13.0	mA
			2.7 V ≤ V_{DD} < 4.0 V			10.0	mA
		Total of P05, P06, P10 to P17, P30 to P33, P50 to P57, P60 to P67, P70 to P77[Note 3]	4.0 V ≤ V_{DD} ≤ 5.5 V			25.0	mA
			2.7 V ≤ V_{DD} < 4.0 V			20.0	mA
		Total of all the pins above[Note 3]	4.0 V ≤ V_{DD} ≤ 5.5 V			38.0	mA
			2.7 V ≤ V_{DD} < 4.0 V			30.0	mA
	I_{OL2}	Per pin for P20 to P27	AV_{REF} = V_{DD}			0.4	mA
		Per pin for P121 to P124				0.4	mA

Notes 1. Value of current at which the device operation is guaranteed even if the current flows from V_{DD} to an output pin.

2. Value of current at which the device operation is guaranteed even if the current flows from an output pin to GND.

3. Specification under conditions where the duty factor is 70% (time for which current is output is 0.7 × t and time for which current is not output is 0.3 × t, where t is a specific time). The total output current of the pins at a duty factor of other than 70% can be calculated by the following expression.

- Where the duty factor of I_{OH} is n%: Total output current of pins = (I_{OH} × 0.7)/(n × 0.01)

<Example> Where the duty factor is 50%, I_{OH} = −10.0 mA

Total output current of pins = (−10.0 × 0.7)/(50 × 0.01) = −14.0 mA

However, the current that is allowed to flow into one pin does not vary depending on the duty factor. A current higher than the absolute maximum rating must not flow into one pin.

Remark Unless specified otherwise, the characteristics of alternate-function pins are the same as those of port pins.

Caution The pins mounted depend on the product. Refer to Caution at the beginning of this chapter.

DC Characteristics (2/4)

(T_A = –40 to +110°C, 2.7 V ≤ V_{DD} = EV_{DD} ≤ 5.5 V, AV_{REF} ≤ V_{DD}, V_{SS} = EV_{SS} = AV_{SS} = 0 V)

Parameter	Symbol	Conditions		MIN.	TYP.	MAX.	Unit
Input voltage, high (products whose flash memory is at least 48 KB)[Note 1]	V_{IH1}	P02, P12, P13, P15, P40 to P47, P50 to P57, P64 to P67, P121 to P124, P144, P145		0.7V_{DD}		V_{DD}	V
	V_{IH2}	P00, P01, P03 to P06, P10, P11, P14, P16, P17, P30 to P33, P70 to P77, P120, P140 to P143, EXCLK, EXCLKS, $\overline{\text{RESET}}$		0.8V_{DD}		V_{DD}	V
	V_{IH3}	P20 to P27	AV_{REF} = V_{DD}	0.7AV_{REF}		AV_{REF}	V
	V_{IH4}	P60 to P63		0.7V_{DD}		6.0	V
Input voltage, high (products whose flash memory is less than 32 KB)[Note 2]	V_{IH1}	P02 to P06, P12, P13, P15, P40 to P43, P50 to P53, P121 to P124		0.7V_{DD}		V_{DD}	V
	V_{IH2}	P00, P01, P10, P11, P14, P16, P17, P30 to P33, P70 to P77, P120, P140, P141, EXCLK, EXCLKS, $\overline{\text{RESET}}$		0.8V_{DD}		V_{DD}	V
	V_{IH3}	P20 to P27	AV_{REF} = V_{DD}	0.7AV_{REF}		AV_{REF}	V
	V_{IH4}	P60 to P63		0.7V_{DD}		6.0	V
Input voltage, low (products whose flash memory is at least 48 KB)[Note 1]	V_{IL1}	P02, P12, P13, P15, P40 to P47, P50 to P57, P60 to P67, P121 to P124, P144, P145		0		0.3V_{DD}	V
	V_{IL2}	P00, P01, P03 to P06, P10, P11, P14, P16, P17, P30 to P33, P70 to P77, P120, P140 to P143, EXCLK, EXCLKS, $\overline{\text{RESET}}$		0		0.2V_{DD}	V
	V_{IL3}	P20 to P27	AV_{REF} = V_{DD}	0		0.3AV_{REF}	V
Input voltage, low (products whose flash memory is less than 32 KB)[Note 2]	V_{IL1}	P02 to P06, P12, P13, P15, P40 to P43, P50 to P53, P60 to P63, P121 to P124		0		0.3V_{DD}	V
	V_{IL2}	P00, P01, P10, P11, P14, P16, P17, P30 to P33, P70 to P77, P120, P140, P141, EXCLK, EXCLKS, $\overline{\text{RESET}}$		0		0.2V_{DD}	V
	V_{IL3}	P20 to P27	AV_{REF} = V_{DD}	0		0.3AV_{REF}	V
Output voltage, high	V_{OH1}	P00 to P06, P10 to P17, P30 to P33, P40 to P47, P50 to P57, P64 to P67, P70 to P77, P120, P130, P140 to P145	4.0 V ≤ V_{DD} ≤ 5.5 V, I_{OH1} = –2.5 mA	V_{DD} – 0.7			V
			2.7 V ≤ V_{DD} < 4.0 V, I_{OH1} = –2.0 mA	V_{DD} – 0.5			V
	V_{OH2}	P20 to P27	AV_{REF} = V_{DD}, I_{OH2} = –100 μA	V_{DD} – 0.5			V
		P121 to P124	I_{OH2} = –100 μA	V_{DD} – 0.5			V

Notes 1. Supported products: 78K0/KD2 and 78K0/KE2 whose flash memory is at least 48 KB, and 78K0/KF2

2. Supported products: 78K0/KD2 and 78K0/KE2 whose flash memory is less than 32 KB, 78K0/KB2, and 78K0/KC2

Remark Unless specified otherwise, the characteristics of alternate-function pins are the same as those of port pins.

Caution The pins mounted depend on the product. Refer to Caution at the beginning of this chapter.

DC Characteristics (3/4)

(T_A = –40 to +110°C, 2.7 V ≤ V_{DD} = EV_{DD} ≤ 5.5 V, AV_{REF} ≤ V_{DD}, V_{SS} = EV_{SS} = AV_{SS} = 0 V)

Parameter	Symbol	Conditions			MIN.	TYP.	MAX.	Unit
Output voltage, low	V_{OL1}	P00 to P06, P10 to P17, P30 to P33, P40 to P47, P50 to P57, P64 to P67, P70 to P77, P120, P130, P140 to P145	4.0 V ≤ V_{DD} ≤ 5.5 V, I_{OL1} = 5.0 mA				0.7	V
			2.7 V ≤ V_{DD} < 4.0 V, I_{OL1} = 3.0 mA				0.7	V
	V_{OL2}	P20 to P27	AV_{REF} = V_{DD}, I_{OL2} = 0.4 mA				0.4	V
		P121 to P124	I_{OL2} = 0.4 mA				0.4	V
	V_{OL3}	P60 to P63	4.0 V ≤ V_{DD} ≤ 5.5 V, I_{OL1} = 10.0 mA				2.0	V
			4.0 V ≤ V_{DD} ≤ 5.5 V, I_{OL1} = 3.0 mA				0.4	V
			2.7 V ≤ V_{DD} < 4.0 V, I_{OL1} =3.0 mA				0.6	V
Input leakage current, high	I_{LIH1}	P00 to P06, P10 to P17, P30 to P33, P40 to P47, P50 to P57, P60 to P67, P70 to P77, P120, P140 to P145, FLMD0, $\overline{\text{RESET}}$	V_I = V_{DD}				3	μA
	I_{LIH2}	P20 to P27	V_I = AV_{REF} = V_{DD}				3	μA
	I_{LIH3}	P121 to 124 (X1, X2, XT1, XT2)	V_I = V_{DD}	I/O port mode			3	μA
				OSC mode			20	μA
Input leakage current, low	I_{LIL1}	P00 to P06, P10 to P17, P30 to P33, P40 to P47, P50 to P57, P60 to P67, P70 to P77, P120, P140 to P145, FLMD0, $\overline{\text{RESET}}$	V_I = V_{SS}				–3	μA
	I_{LIL2}	P20 to P27	V_I = V_{SS}, AV_{REF} = V_{DD}				–3	μA
	I_{LIL3}	P121 to 124 (X1, X2, XT1, XT2)	V_I = V_{SS}	I/O port mode			–3	μA
				OSC mode			–20	μA
Pull-up resistor	R_U	V_I = V_{SS}			10	20	100	kΩ
FLMD0 supply voltage	V_{IL}	In normal operation mode			0		0.2V_{DD}	V
	V_{IH}	In self-programming mode			0.8V_{DD}		V_{DD}	V

Remark Unless specified otherwise, the characteristics of alternate-function pins are the same as those of port pins.

Caution The pins mounted depend on the product. Refer to Caution at the beginning of this chapter.

DC Characteristics (4/4)

(T_A = −40 to +110°C, 2.7 V ≤ V_{DD} = EV_{DD} ≤ 5.5 V, AV_{REF} ≤ V_{DD}, V_{SS} = EV_{SS} = AV_{SS} = 0 V)

Parameter	Symbol	Conditions			MIN.	TYP.	MAX.	Unit
Supply current[Note 1]	I_{DD1}	Operating mode	f_{XH} = 20 MHz, V_{DD} = 5.0 V [Note 2]	Square wave input		3.2	7.2	mA
				Resonator connection		4.5	9.0	mA
			f_{XH} = 10 MHz, V_{DD} = 5.0 V [Notes 2, 3]	Square wave input		1.6	3.7	mA
				Resonator connection		2.3	5.1	mA
			f_{XH} = 10 MHz V_{DD} = 3.0 V [Notes 2, 3]	Square wave input		1.5	3.6	mA
				Resonator connection		2.2	4.2	mA
			f_{XH} = 5 MHz, V_{DD} = 3.0 V [Notes 2, 3]	Square wave input		0.9	2.1	mA
				Resonator connection		1.3	2.6	mA
			f_{RH} = 8 MHz, V_{DD} = 5.0 V [Note 4]			1.4	3.3	mA
			f_{SUB} = 32.768 kHz, V_{DD} = 5.0 V [Note 5]	Square wave input		6	93	μA
				Resonator connection		15	100	μA
	I_{DD2}	HALT mode	f_{XH} = 20 MHz, V_{DD} = 5.0 V [Note 2]	Square wave input		0.8	3.4	mA
				Resonator connection		2.0	5.8	mA
			f_{XH} = 10 MHz, V_{DD} = 5.0 V [Notes 2, 3]	Square wave input		0.4	1.7	mA
				Resonator connection		1.0	3.2	mA
			f_{XH} = 5 MHz, V_{DD} = 3.0 V [Notes 2, 3]	Square wave input		0.2	0.85	mA
				Resonator connection		0.5	1.5	mA
			f_{RH} = 8 MHz, V_{DD} = 5.0 V [Note 4]			0.4	1.6	mA
			f_{SUB} = 32.768 kHz, V_{DD} = 5.0 V [Note 5]	Square wave input		3.0	89	μA
				Resonator connection		12	93	μA
	I_{DD3}[Note 6]	STOP mode				1	60	μA
			T_A = −40 to +70 °C			1	10	μA
A/D converter operating current	I_{ADC}[Note 7]	2.7 V ≤ AV_{REF} ≤ V_{DD}, ADCS = 1				0.86	2.5	mA
Watchdog timer operating current	I_{WDT}[Note 8]	During 240 kHz internal low-speed oscillation clock operation				5	13	μA
LVI operating current	I_{LVI}[Note 9]					9	24	μA

Remarks 1. f_{XH}: High-speed system clock frequency (X1 clock oscillation frequency or external main system clock frequency)

2. f_{RH}: Internal high-speed oscillation clock frequency

3. f_{SUB}: Subsystem clock frequency (XT1 clock oscillation frequency or external subsystem clock frequency)

(Notes on next page)

Notes 1. Total current flowing into the internal power supply (V_{DD}, EV_{DD}), including the peripheral operation current and the input leakage current flowing when the level of the input pin is fixed to V_{DD} or V_{SS}. However, the current flowing into the pull-up resistors and the output current of the port are not included.

2. Not including the operating current of the 8 MHz internal oscillator, 240 kHz internal oscillator, and XT1 oscillator, and the current flowing into the A/D converter, watchdog timer and LVI circuit.

3. When AMPH (bit 0 of clock operation mode select register (OSCCTL)) = 0.

4. Not including the operating current of the X1 oscillator, XT1 oscillator, and 240 kHz internal oscillator, and the current flowing into the A/D converter, watchdog timer and LVI circuit.

5. Not including the operating current of the X1 oscillation, 8 MHz internal oscillator and 240 kHz internal oscillator, and the current flowing into the A/D converter, watchdog timer and LVI circuit.

6. Not including the operating current of the 240 kHz internal oscillator and XT1 oscillation, and the current flowing into the A/D converter, watchdog timer and LVI circuit.

7. Current flowing only to the A/D converter (AV_{REF}). The current value of the 78K0/Kx2 microcontrollers is the sum of I_{DD1} or I_{DD2} and I_{ADC} when the A/D converter operates in an operation mode or the HALT mode.

8. Current flowing only to the watchdog timer (including the operating current of the 240 kHz internal oscillator). The current value of the 78K0/Kx2 microcontrollers is the sum of I_{DD1}, I_{DD2} or I_{DD3} and I_{WDT} when the watchdog timer operates.

9. Current flowing only to the LVI circuit. The current value of the 78K0/Kx2 microcontrollers is the sum of I_{DD1}, I_{DD2} or I_{DD3} and I_{LVI} when the LVI circuit operates.

Caution The pins mounted depend on the product. Refer to Caution at the beginning of this chapter.

AC Characteristics

(1) Basic operation (1/2)

(T_A = –40 to +110°C, 2.7 V ≤ V_{DD} = EV_{DD} ≤ 5.5 V, AV_{REF} ≤ V_{DD}, V_{SS} = EV_{SS} = AV_{SS} = 0 V)

Parameter	Symbol	Conditions			MIN.	TYP.	MAX.	Unit
Instruction cycle (minimum instruction execution time)	T_{CY}	Main system clock (f_{XP}) operation	Conventional-specification Products (μPD78F05xx (A2))	4.0 V ≤ V_{DD} ≤ 5.5 V	0.1		32	μs
				2.7 V ≤ V_{DD} < 4.0 V	0.2		32	μs
			Expanded-specification Products (μPD78F05xxA (A2))	2.7 V ≤ V_{DD} ≤ 5.5 V	0.1		32	μs
		Subsystem clock (f_{SUB}) operation Note 1			114	122	125	μs
Peripheral hardware clock frequency	f_{PRS}	f_{PRS} = f_{XH} (XSEL = 1)	Conventional-specification Products (μPD78F05xx (A2))	4.0 V ≤ V_{DD} ≤ 5.5 V			20	MHz
				2.7 V ≤ V_{DD} < 4.0 V			10	MHz
			Expanded-specification Products (μPD78F05xxA (A2))	4.0 V ≤ V_{DD} ≤ 5.5 V			20	MHz
				2.7 V ≤ V_{DD} < 4.0 V Note 2			20	MHz
		f_{PRS} = f_{RH} (XSEL = 0)		2.7 V ≤ V_{DD} ≤ 5.5 V	7.6		8.4	MHz
External main system clock frequency	f_{EXCLK}	Conventional-specification Products (μPD78F05xx(A2))		4.0 V ≤ V_{DD} ≤ 5.5 V	1.0 Note 3		20.0	MHz
				2.7 V ≤ V_{DD} < 4.0 V	1.0 Note 3		10.0	MHz
		Expanded-specification Products (μPD78F05xxA(A2))		2.7 V ≤ V_{DD} ≤ 5.5 V	1.0 Note 3		20.0	MHz
External main system clock input high-level width, low-level width	t_{EXCLKH}, t_{EXCLKL}	Conventional-specification Products (μPD78F05xx(A2))		4.0 V ≤ V_{DD} ≤ 5.5 V	24			ns
				2.7 V ≤ V_{DD} < 4.0 V	48			ns
		Expanded-specification Products (μPD78F05xxA(A2))		2.7 V ≤ V_{DD} ≤ 5.5 V	24			ns

Notes 1. The 78K0/KB2 is not provided with a subsystem clock.

2. Characteristics of the main system clock frequency. Set the division clock to be set by a peripheral function to f_{XH}/2 (10 MHz) or less. The multiplier/divider, however, can operate on f_{XH} (20 MHz).

3. 2.0 MHz (MIN.) when using UART6 during on-board programming.

Caution The pins mounted depend on the product. Refer to Caution 2 at the beginning of this chapter.

(1) Basic operation (2/2)

(T_A = –40 to +110°C, 2.7 V ≤ V_{DD} = EV_{DD} ≤ 5.5 V, AV_{REF} ≤ V_{DD}, V_{SS} = EV_{SS} = AV_{SS} = 0 V)

Parameter	Symbol	Conditions	MIN.	TYP.	MAX.	Unit
External subsystem clock frequency[Note 1]	f_{EXCLKS}		32	32.768	35	kHz
External subsystem clock input high-level width, low-level width[Note 1]	$t_{EXCLKSH}$, $t_{EXCLKSL}$		12			μs
TI000, TI010, TI001, TI011 input high-level width, low-level width	t_{TIH0}, t_{TIL0}	4.0 V ≤ V_{DD} ≤ 5.5 V	$2/f_{sam}$ + 0.1[Note 2]			μs
		2.7 V ≤ V_{DD} < 4.0 V	$2/f_{sam}$ + 0.2[Note 2]			μs
TI50, TI51 input frequency	f_{TI5}				10	MHz
TI50, TI51 input high-level width, low-level width	t_{TIH5}, t_{TIL5}		50			ns
Interrupt input high-level width, low-level width	t_{INTH}, t_{INTL}		1			μs
Key interrupt input low-level width	t_{KR}		250			ns
$\overline{\text{RESET}}$ low-level width	t_{RSL}		10			μs

Notes 1. The 78K0/KB2 is not provided with a subsystem clock.

2. Selection of f_{sam} = f_{PRS}, $f_{PRS}/4$, $f_{PRS}/256$, or f_{PRS}, $f_{PRS}/16$, $f_{PRS}/64$ is possible using bits 0 and 1 (PRM000, PRM001 or PRM010, PRM011) of prescaler mode registers 00 and 01 (PRM00, PRM01). Note that when selecting the TI000 or TI001 valid edge as the count clock, f_{sam} = f_{PRS}.

Caution The pins mounted depend on the product. Refer to Caution at the beginning of this chapter.

T_{CY} vs. V_{DD} (Main System Clock Operation)

<1> Conventional-specification Products (μPD78F05xx(A2))

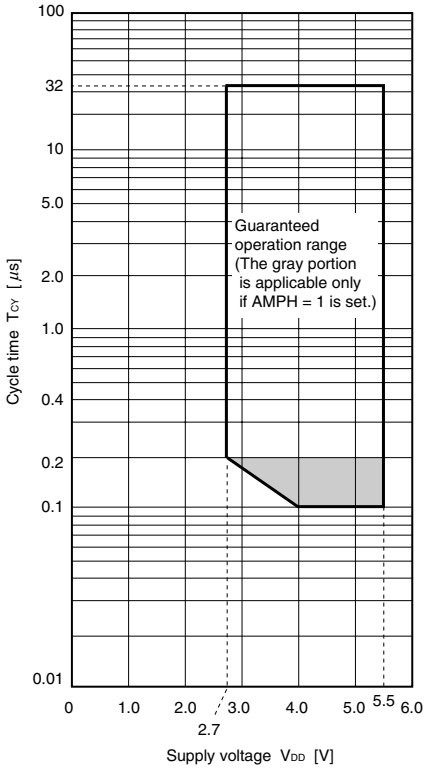

<2> Expanded-specification Products (μPD78F05xxA(A2))

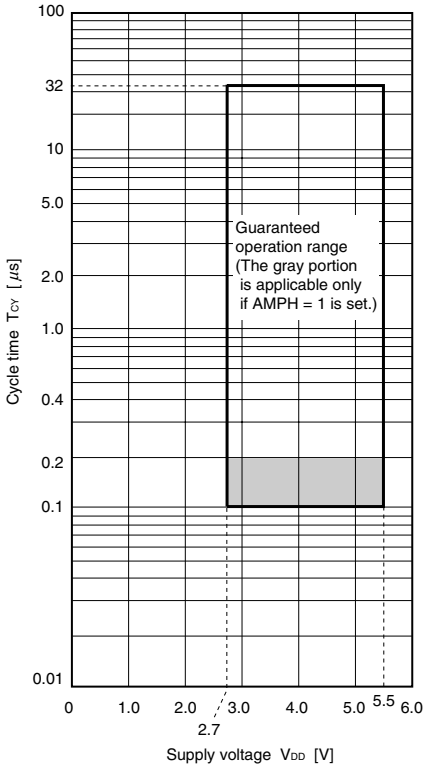

Caution The pins mounted depend on the product. Refer to Caution at the beginning of this chapter.

AC Timing Test Points

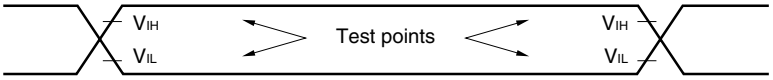

External Main System Clock Timing, External Subsystem Clock Timing

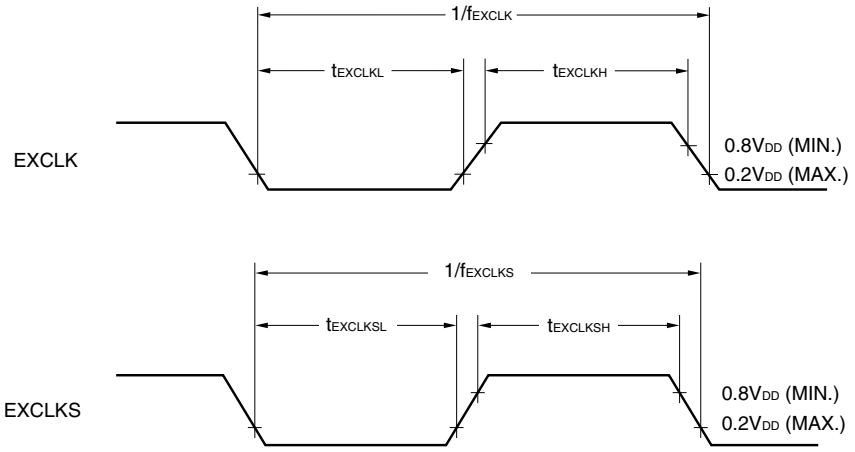

Caution The pins mounted depend on the product. Refer to Caution at the beginning of this chapter.

TI Timing

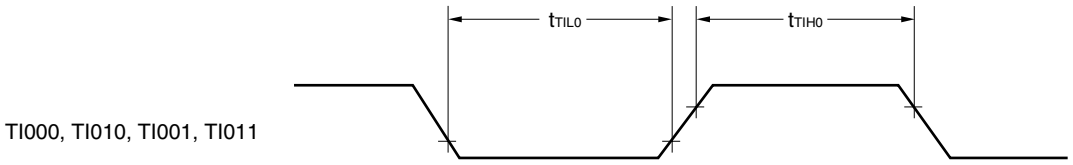

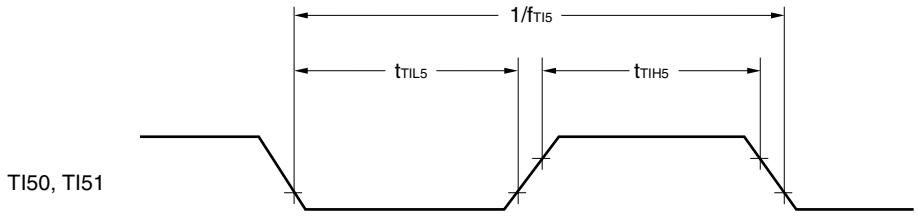

Interrupt Request Input Timing

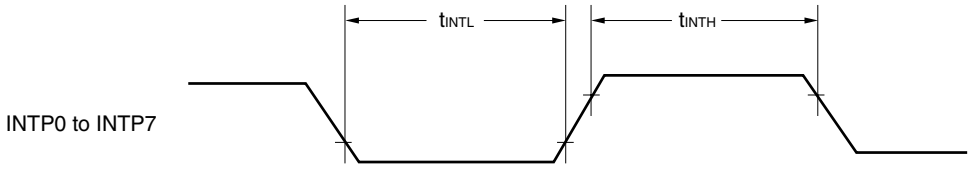

Key Interrupt Input Timing

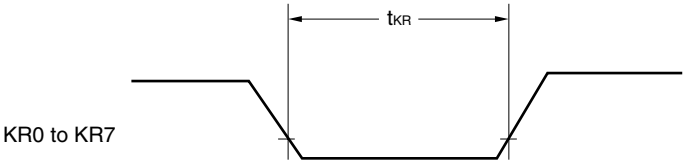

$\overline{\text{RESET}}$ Input Timing

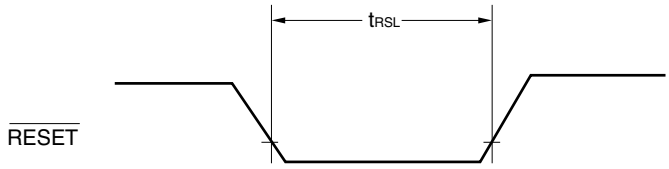

Caution The pins mounted depend on the product. Refer to Caution at the beginning of this chapter.

(2) Serial interface

(T_A = –40 to +110°C, 2.7 V ≤ V_{DD} = EV_{DD} ≤ 5.5 V, AV_{REF} ≤ V_{DD}, V_{SS} = EV_{SS} = AV_{SS} = 0 V)

(a) UART6 (dedicated baud rate generator output)

Parameter	Symbol	Conditions	MIN.	TYP.	MAX.	Unit
Transfer rate					625	kbps

(b) UART0 (dedicated baud rate generator output)

Parameter	Symbol	Conditions	MIN.	TYP.	MAX.	Unit
Transfer rate					625	kbps

(c) IIC0

Parameter	Symbol	Conditions	Standard Mode		High-Speed Mode		Unit
			MIN.	MAX.	MIN.	MAX.	
SCL0 clock frequency	f_{SCL}		0	100	0	400	kHz
Setup time of restart condition	$t_{SU:STA}$		4.7	–	0.6	–	μs
Hold time[Note 1]	$t_{HD:STA}$		4.0	–	0.6	–	μs
Hold time when SCL0 = "L"	t_{LOW}	Internal clock operation	4.7	–	1.3	–	μs
		EXSCL0 clock (6.4 MHz) operation	4.7	–	1.25	–	μs
Hold time when SCL0 = "H"	t_{HIGH}		4.0	–	0.6	–	μs
Data setup time (reception)	$t_{SU:DAT}$		250	–	100	–	ns
Data hold time (transmission)[Note 2]	$t_{HD:DAT}$	$f_W = f_{XH}/2^N$ or $f_W = f_{EXSCL0}$ selected[Note 3]	0	3.45	0	0.9[Note 4]	μs
						1.00[Note 5]	
		$f_W = f_{RH}/2^N$ selected[Note 3]	0	3.45	0	1.05	μs
Setup time of stop condition	$t_{SU:STO}$		4.0	–	0.6	–	μs
Bus free time	t_{BUF}		4.7	–	1.3	–	μs

Notes 1. The first clock pulse is generated after this period when the start/restart condition is detected.

2. The maximum value (MAX.) of $t_{HD:DAT}$ is during normal transfer and a wait state is inserted in the $\overline{ACK}$ (acknowledge) timing.

3. f_W indicates the IIC0 transfer clock selected by the IICCL and IICX0 registers.

4. When $f_W \geq 4.4$ MHz is selected

5. When $f_W < 4.4$ MHz is selected

Caution The pins mounted depend on the product. Refer to Caution at the beginning of this chapter.

(d) CSI1n (master mode, $\overline{SCK1n}$… internal clock output)

Parameter	Symbol	Conditions	MIN.	TYP.	MAX.	Unit
$\overline{SCK1n}$ cycle time	t_{KCY1}	4.0 V ≤ V_{DD} ≤ 5.5 V	200			ns
		2.7 V ≤ V_{DD} < 4.0 V	400			ns
$\overline{SCK1n}$ high-/low-level width	t_{KH1}, t_{KL1}	4.0 V ≤ V_{DD} ≤ 5.5 V	$t_{KCY1}/2 - 20$ Note 1			ns
		2.7 V ≤ V_{DD} < 4.0 V	$t_{KCY1}/2 - 30$ Note 1			ns
SI1n setup time (to $\overline{SCK1n}$↑)	t_{SIK1}	4.0 V ≤ V_{DD} ≤ 5.5 V	70			ns
		2.7 V ≤ V_{DD} < 4.0 V	100			ns
SI1n hold time (from $\overline{SCK1n}$↑)	t_{KSI1}		30			ns
Delay time from $\overline{SCK1n}$↓ to SO1n output	t_{KSO1}	C = 50 pF Note 2			40	ns

Notes 1. This value is when high-speed system clock (f_{XH}) is used.

2. C is the load capacitance of the $\overline{SCK1n}$ and SO1n output lines.

(e) CSI1n (slave mode, $\overline{SCK1n}$… external clock input)

Parameter	Symbol	Conditions	MIN.	TYP.	MAX.	Unit
$\overline{SCK1n}$ cycle time	t_{KCY2}		400			ns
$\overline{SCK1n}$ high-/low-level width	t_{KH2}, t_{KL2}		$t_{KCY2}/2$			ns
SI1n setup time (to $\overline{SCK1n}$↑)	t_{SIK2}		80			ns
SI1n hold time (from $\overline{SCK1n}$↑)	t_{KSI2}		50			ns
Delay time from $\overline{SCK1n}$↓ to SO1n output	t_{KSO2}	C = 50 pF Note			120	ns

Note C is the load capacitance of the SO1n output line.

Remark n = 0, 1

Caution The pins mounted depend on the product. Refer to Caution at the beginning of this chapter.

(f) CSIA0 (master mode, $\overline{SCKA0}$…internal clock output)

Parameter	Symbol	Conditions		MIN.	TYP.	MAX.	Unit
$\overline{SCKA0}$ cycle time	t_{KCY3}	4.0 V ≤ V_{DD} ≤ 5.5 V		600			ns
		2.7 V ≤ V_{DD} < 4.0 V		1200			ns
$\overline{SCKA0}$ high-/low-level width	t_{KH3}, t_{KL3}	4.0 V ≤ V_{DD} ≤ 5.5 V		$t_{KCY3}/2$ – 50			ns
		2.7 V ≤ V_{DD} < 4.0 V		$t_{KCY3}/2$ – 100			ns
SIA0 setup time (to $\overline{SCKA0}$↑)	t_{SIK3}			100			ns
SIA0 hold time (from $\overline{SCKA0}$↑)	t_{KSI3}			300			ns
Delay time from $\overline{SCKA0}$↓ to SOA0 output	t_{KSO3}	C = 100 pF[Note]	4.0 V ≤ V_{DD} ≤ 5.5 V			200	ns
			2.7 V ≤ V_{DD} < 4.0 V			300	ns
Time from $\overline{SCKA0}$↑ to STB0↑	t_{SBD}			$t_{KCY3}/2$ – 100			ns
Strobe signal high-level width	t_{SBW}	4.0 V ≤ V_{DD} ≤ 5.5 V		t_{KCY3} – 30			ns
		2.7 V ≤ V_{DD} < 4.0 V		t_{KCY3} – 60			ns
Busy signal setup time (to busy signal detection timing)	t_{BYS}			100			ns
Busy signal hold time (from busy signal detection timing)	t_{BYH}			100			ns
Time from busy inactive to $\overline{SCKA0}$↓	t_{SPS}	4.0 V ≤ V_{DD} ≤ 5.5 V				$2t_{KCY3}$ + 100	ns
		2.7 V ≤ V_{DD} < 4.0 V				$2t_{KCY3}$ – 150	ns

Note C is the load capacitance of the $\overline{SCKA0}$ and SOA0 output lines.

Caution The pins mounted depend on the product. Refer to Caution at the beginning of this chapter.

(g) CSIA0 (slave mode, $\overline{SCKA0}$…external clock input)

Parameter	Symbol	Conditions		MIN.	TYP.	MAX.	Unit
$\overline{SCKA0}$ cycle time	t_{KCY4}	4.0 V ≤ V_{DD} ≤ 5.5 V		600			ns
		2.7 V ≤ V_{DD} < 4.0 V		1200			ns
$\overline{SCKA0}$ high-/low-level width	t_{KH4}, t_{KL4}	4.0 V ≤ V_{DD} ≤ 5.5 V		300			ns
		2.7 V ≤ V_{DD} < 4.0 V		600			ns
SIA0 setup time (to $\overline{SCKA0}$↑)	t_{SIK4}			100			ns
SIA0 hold time (from $\overline{SCKA0}$↑)	t_{KSI4}			$2/f_W$ + 100 Note 1			ns
Delay time from $\overline{SCKA0}$↓ to SOA0 output	t_{KSO4}	C = 100 pF Note 2	4.0 V ≤ V_{DD} ≤ 5.5 V			$2/f_W$ + 100 Note 1	ns
			2.7 V ≤ V_{DD} < 4.0 V			$2/f_W$ + 200 Note 1	ns
$\overline{SCKA0}$ rise/fall time	t_{R4}, t_{F4}					1000	ns

Notes 1. f_W is the CSIA0 base clock selected by the CSIS0 register.

2. C is the load capacitance of the SOA0 output line.

Caution The pins mounted depend on the product. Refer to Caution at the beginning of this chapter.

Serial Transfer Timing (1/2)

IIC0:

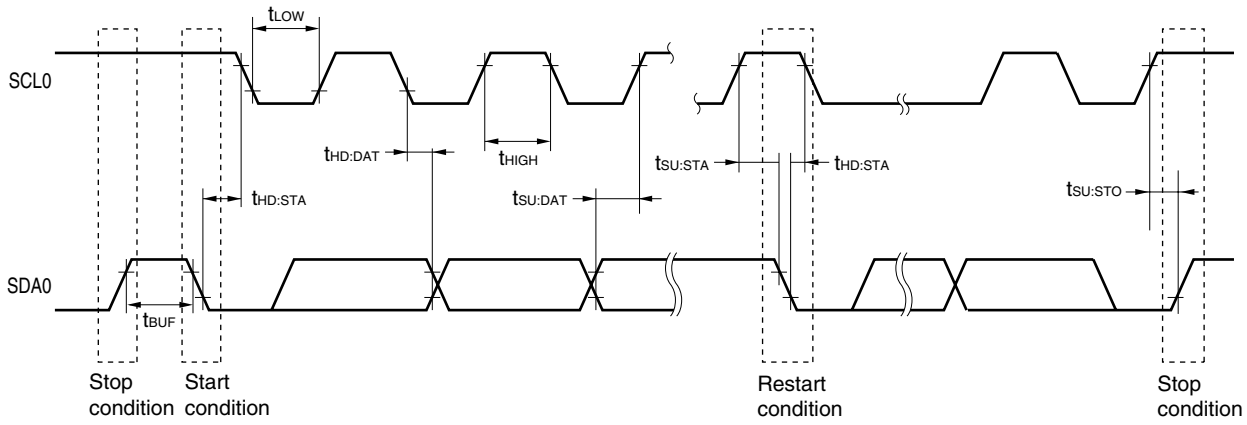

CSI1n:

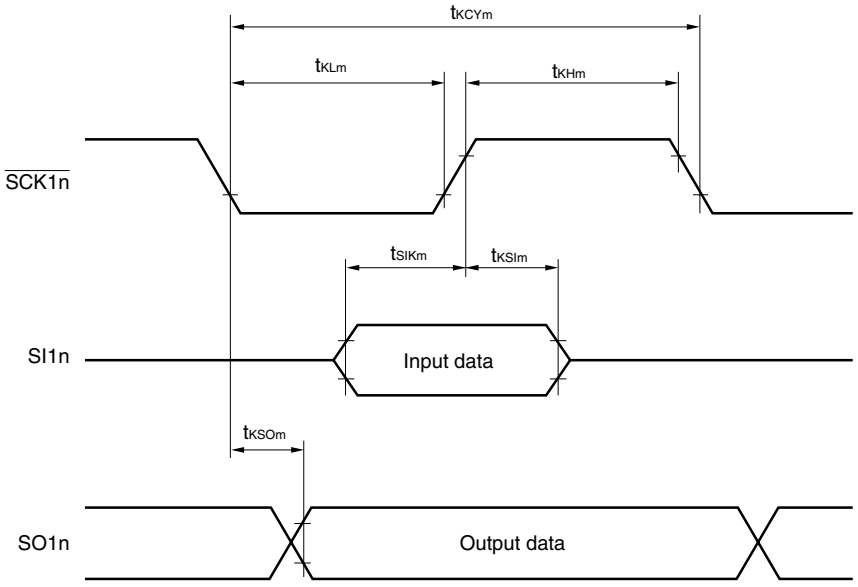

Remark m = 1, 2
n = 0, 1

Caution The pins mounted depend on the product. Refer to Caution at the beginning of this chapter.

Serial Transfer Timing (2/2)

CSIA0:

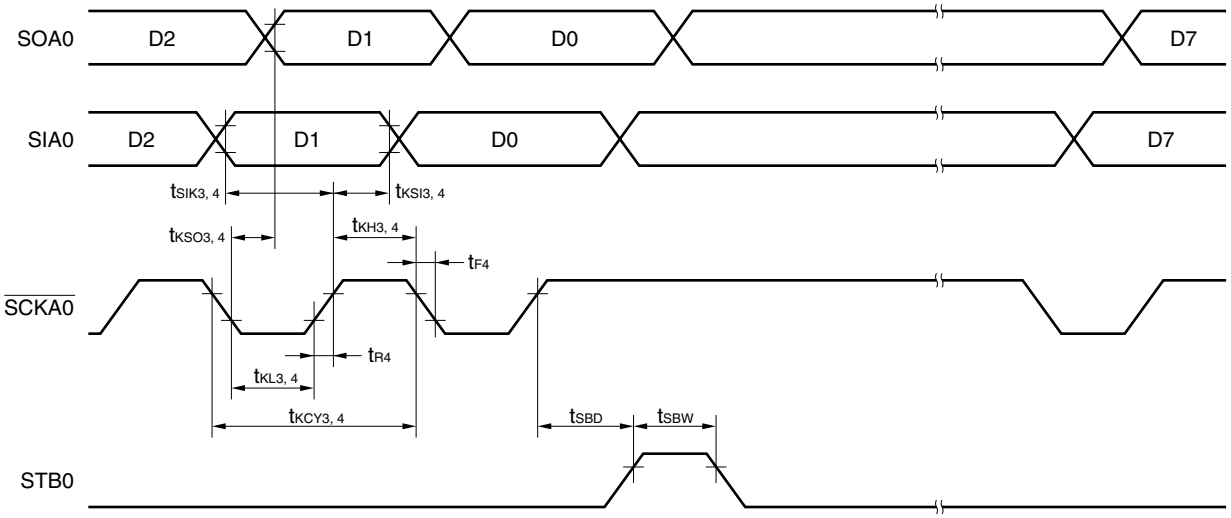

CSIA0 (busy processing):

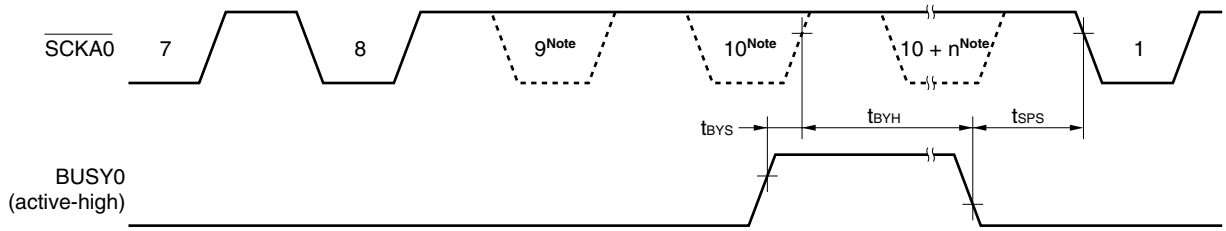

Note SCKA0 does not become low level here, but the timing is illustrated so that the timing specifications can be shown.

Caution The pins mounted depend on the product. Refer to Caution at the beginning of this chapter.

A/D Converter Characteristics

(T_A = –40 to +110°C, 2.7 V ≤ AV_{REF} ≤ V_{DD} = EV_{DD} ≤ 5.5 V, V_{SS} = EV_{SS} = AV_{SS} = 0 V)

Parameter	Symbol	Conditions		MIN.	TYP.	MAX.	Unit
Resolution	R_{ES}					10	bit
Overall error[Notes 1, 2]	A_{INL}	4.0 V ≤ AV_{REF} ≤ 5.5 V				±0.4	%FSR
		2.7 V ≤ AV_{REF} < 4.0 V				±0.6	%FSR
Conversion time	t_{CONV}	Conventional-specification Products (μPD78F05xx(A2))	4.0 V ≤ AV_{REF} ≤ 5.5 V	6.1		36.7	μs
			2.7 V ≤ AV_{REF} < 4.0 V	12.2		36.7	μs
		Expanded-specification Products (μPD78F05xxA (A2))	4.0 V ≤ AV_{REF} ≤ 5.5 V	6.1		66.6	μs
			2.7 V ≤ AV_{REF} < 4.0 V	12.2		66.6	μs
Zero-scale error[Notes 1, 2]	E_{ZS}	4.0 V ≤ AV_{REF} ≤ 5.5 V				±0.4	%FSR
		2.7 V ≤ AV_{REF} < 4.0 V				±0.6	%FSR
Full-scale error[Notes 1, 2]	E_{FS}	4.0 V ≤ AV_{REF} ≤ 5.5 V				±0.4	%FSR
		2.7 V ≤ AV_{REF} < 4.0 V				±0.6	%FSR
Integral non-linearity error[Note 1]	I_{LE}	4.0 V ≤ AV_{REF} ≤ 5.5 V				±2.5	LSB
		2.7 V ≤ AV_{REF} < 4.0 V				±4.5	LSB
Differential non-linearity error[Note 1]	D_{LE}	4.0 V ≤ AV_{REF} ≤ 5.5 V				±1.5	LSB
		2.7 V ≤ AV_{REF} < 4.0 V				±2.0	LSB
Analog input voltage	V_{AIN}			AV_{SS}		AV_{REF}	V

Notes 1. Excludes quantization error (±1/2 LSB).

2. This value is indicated as a ratio (%FSR) to the full-scale value.

Caution The pins mounted depend on the product. Refer to Caution at the beginning of this chapter.

1.59 V POC Circuit Characteristics (T_A = –40 to +110°C, V_{SS} = EV_{SS} = 0 V)

Parameter	Symbol	Conditions	MIN.	TYP.	MAX.	Unit
Detection voltage	V_{POC}		1.44	1.59	1.74	V
Power supply voltage rise inclination	t_{PTH}	V_{DD}: 0 V → change inclination of V_{POC}	0.5			V/ms
Minimum pulse width	t_{PW}		200			μs

1.59 V POC Circuit Timing

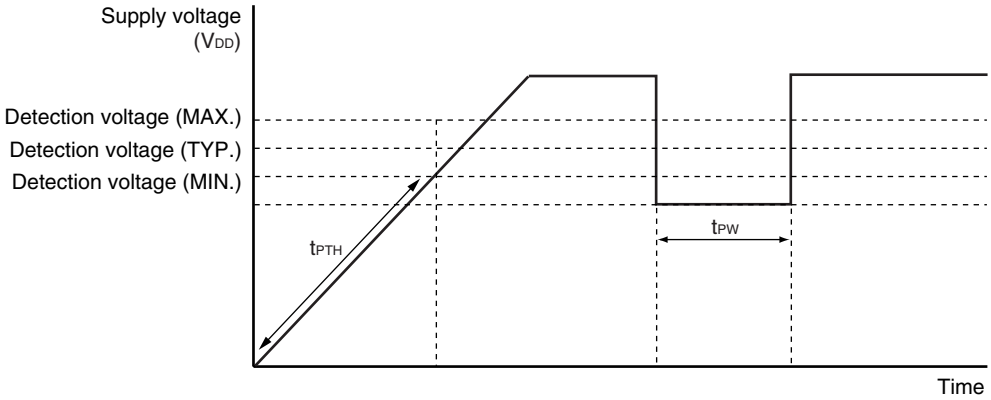

Caution The pins mounted depend on the product. Refer to Caution at the beginning of this chapter.

Supply Voltage Rise Time (T_A = –40 to +110°C, V_{SS} = EV_{SS} = 0 V)

Parameter	Symbol	Conditions	MIN.	TYP.	MAX.	Unit
Maximum time to rise to 2.7 V (V_{DD} (MIN.)) (V_{DD}: 0 V → 2.7 V)	t_{PUP1}	POCMODE (option byte) = 0, when $\overline{\text{RESET}}$ input is not used			3.6	ms
Maximum time to rise to 2.7 V (V_{DD} (MIN.)) (releasing $\overline{\text{RESET}}$ input → V_{DD}: 2.7 V)	t_{PUP2}	POCMODE (option byte) = 0, when $\overline{\text{RESET}}$ input is used			1.9	ms

Supply Voltage Rise Time Timing

• When $\overline{\text{RESET}}$ pin input is not used

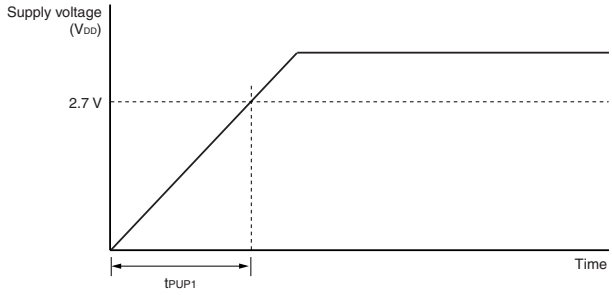

• When $\overline{\text{RESET}}$ pin input is used

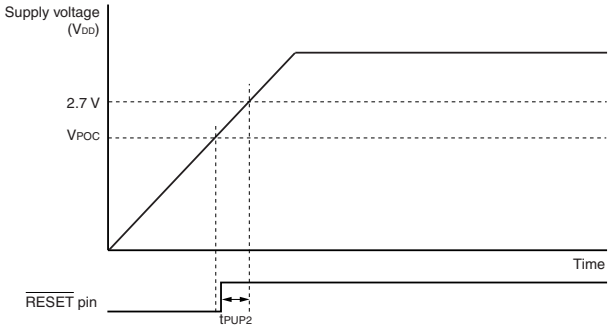

Caution The pins mounted depend on the product. Refer to Caution at the beginning of this chapter.

2.7 V POC Circuit Characteristics (T_A = –40 to +110°C, V_{SS} = EV_{SS} = 0 V)

Parameter	Symbol	Conditions	MIN.	TYP.	MAX.	Unit
Detection voltage on application of supply voltage	V_{DDPOC}	POCMODE (option bye) = 1	2.50	2.70	2.90	V

Remark The operations of the POC circuit are as described below, depending on the POCMODE (option byte) setting.

Option Byte Setting	POC Mode	Operation
POCMODE = 0	1.59 V mode operation	A reset state is retained until V_{POC} = 1.59 V (TYP.) is reached after the power is turned on, and the reset is released when V_{POC} is exceeded. After that, POC detection is performed at V_{POC}, similarly as when the power was turned on. The power supply voltage must be raised at a time of t_{PUP1} or t_{PUP2} when POCMODE is 0.
POCMODE = 1	2.7 V/1.59 V mode operation	A reset state is retained until V_{DDPOC} = 2.7 V (TYP.) is reached after the power is turned on, and the reset is released when V_{DDPOC} is exceeded. After that, POC detection is performed at V_{POC} = 1.59 V (TYP.) and not at V_{DDPOC}. The use of the 2.7 V/1.59 V POC mode is recommended when the rise of the voltage, after the power is turned on and until the voltage reaches 1.8 V, is more relaxed than t_{PTH}.

Caution The pins mounted depend on the product. Refer to Caution at the beginning of this chapter.

LVI Circuit Characteristics (T_A = –40 to +110°C, $V_{POC} \leq V_{DD} = EV_{DD} \leq 5.5$ V, $AV_{REF} \leq V_{DD}$, $V_{SS} = EV_{SS}$ = 0 V)

Parameter		Symbol	Conditions	MIN.	TYP.	MAX.	Unit
Detection voltage	Supply voltage level	V_{LVI0}		4.14	4.24	4.34	V
		V_{LVI1}		3.99	4.09	4.19	V
		V_{LVI2}		3.83	3.93	4.03	V
		V_{LVI3}		3.68	3.78	3.88	V
		V_{LVI4}		3.52	3.62	3.72	V
		V_{LVI5}		3.37	3.47	3.57	V
		V_{LVI6}		3.22	3.32	3.42	V
		V_{LVI7}		3.06	3.16	3.26	V
		V_{LVI8}		2.91	3.01	3.11	V
		V_{LVI9}		2.75	2.85	2.95	V
	External input pin[Note 1]	EXLVI	EXLVI < V_{DD}, 2.7 V ≤ V_{DD} ≤ 5.5 V	1.11	1.21	1.31	V
Minimum pulse width		t_{LW}		200			μs
Operation stabilization wait time[Note 2]		t_{LWAIT}		10			μs

Notes 1. The EXLVI/P120/INTP0 pin is used.

2. Time required from setting bit 7 (LVION) of the low-voltage detection register (LVIM) to 1 to operation stabilization

Remark $V_{LVI(n-1)} > V_{LVIn}$: n = 1 to 9

LVI Circuit Timing

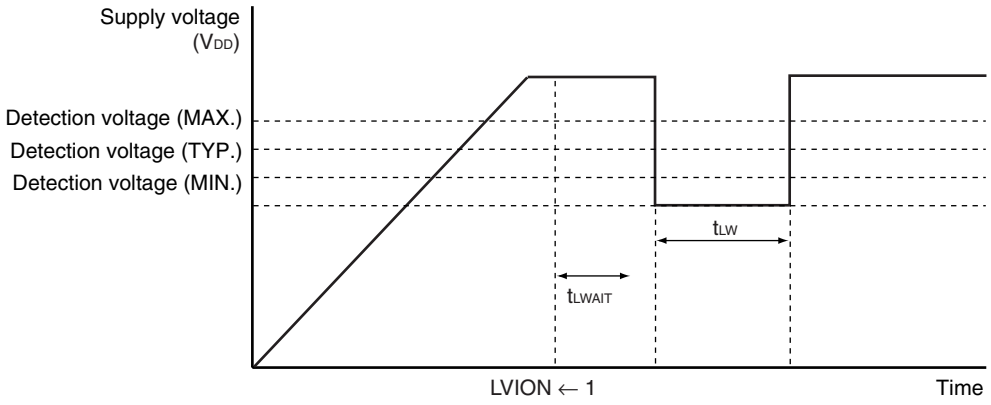

Caution The pins mounted depend on the product. Refer to Caution at the beginning of this chapter.

Data Memory STOP Mode Low Supply Voltage Data Retention Characteristics (T_A = –40 to +110°C)

Parameter	Symbol	Conditions	MIN.	TYP.	MAX.	Unit
Data retention supply voltage	V_{DDDR}		1.44[Note]		5.5	V

Note The value depends on the POC detection voltage. When the voltage drops, the data is retained until a POC reset is effected, but data is not retained when a POC reset is effected.

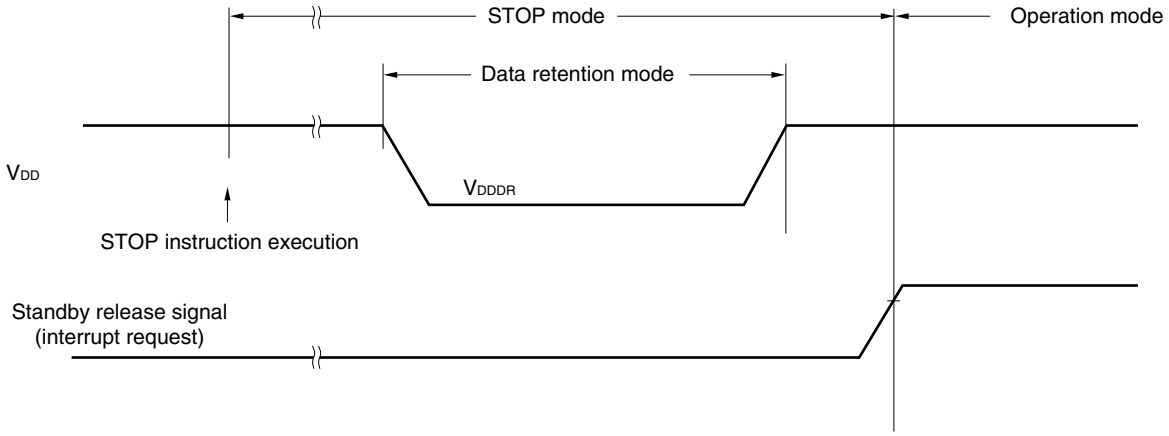

Caution The pins mounted depend on the product. Refer to Caution at the beginning of this chapter.

Flash Memory Programming Characteristics

(T_A = –40 to +110°C, 2.7 V ≤ V_{DD} = EV_{DD} ≤ 5.5 V, AV_{REF} ≤ V_{DD}, V_{SS} = EV_{SS} = AV_{SS} = 0 V)

• Basic characteristics

Parameter		Symbol	Conditions				MIN.	TYP.	MAX.	Unit
V_{DD} supply current		I_{DD}	f_{XP} = 10 MHz (TYP.), 20 MHz (MAX.)					4.5	14.0	mA
Erase time Notes 1, 2	All block	T_{eraca}						20	200	ms
	Block unit	T_{erasa}						20	200	ms
Write time (in 8-bit units) Note 1		T_{wrwa}						10	100	μs
Number of rewrites per chip		C_{erwr}	1 erase + 1 write after erase = 1 rewrite Note 3	Expanded-specification Products (μPD78F05xxA (A2))	• When a flash memory programmer is used, and the libraries Note 4 provided by Renesas Electronics are used • For program update	Retention: 15 years	1000			Times
					• When the EEPROM emulation libraries Note 5 provided by Renesas Electronics are used • The rewritable ROM size: 4 KB • For data update	Retention: 5 years	10000			Times
				Expanded-specification Products (μPD78F05xxA (A2))	Conditions other than the above Note 6	Retention: 10 years	100			Times
				Conventional-specification Products (μPD78F05xx (A2))						

Notes 1. Characteristic of the flash memory. For the characteristic when a dedicated flash programmer, PG-FP4 or PG-FP5, is used and the rewrite time during self programming, see **Tables 27-12** to **27-14**.

2. The prewrite time before erasure and the erase verify time (writeback time) are not included.

3. When a product is first written after shipment, “erase → write” and “write only” are both taken as one rewrite.

4. The sample library specified by the **78K0/Kx2 Flash Memory Self Programming User’s Manual** (Document No.: **U17516E**) is excluded.

5. The sample program specified by the **78K0/Kx2 EEPROM Emulation Application Note** (Document No.: **U17517E**) is excluded.

6. These include when the sample library specified by the **78K0/Kx2 Flash Memory Self Programming User’s Manual** (Document No.: **U17516E**) and the sample program specified by **the 78K0/Kx2 EEPROM Emulation Application Note** (Document No.: **U17517E**) are used.

Remarks 1. f_{XP}: Main system clock oscillation frequency

2. For serial write operation characteristics, refer to **78K0/Kx2 Flash Memory Programming (Programmer) Application Note (**Document No.: **U17739E)**.

CHAPTER 33 ELECTRICAL SPECIFICATIONS ((A2) GRADE PRODUCTS: T_A = –40 to +125°C)

Target Products	Conventional-specification Products	Expanded-specification Products
78K0/KB2	μPD78F0500(A2), 78F0501(A2), 78F0502(A2), 78F0503(A2)	μPD78F0500A(A2), 78F0501A(A2), 78F0502A(A2), 78F0503A(A2)
78K0/KC2	μPD78F0511(A2), 78F0512(A2), 78F0513(A2), 78F0514(A2), 78F0515(A2)	μPD78F0511A(A2), 78F0512A(A2), 78F0513A(A2), 78F0514A(A2), 78F0515A(A2)
78K0/KD2	μPD78F0521(A2), 78F0522(A2), 78F0523(A2), 78F0524(A2), 78F0525(A2), 78F0526(A2), 78F0527(A2)	μPD78F0521A(A2), 78F0522A(A2), 78F0523A(A2), 78F0524A(A2), 78F0525A(A2), 78F0526A(A2), 78F0527A(A2)
78K0/KE2	μPD78F0531(A2), 78F0532(A2), 78F0533(A2), 78F0534(A2), 78F0535(A2), 78F0536(A2), 78F0537(A2)	μPD78F0531A(A2), 78F0532A(A2), 78F0533A(A2), 78F0534A(A2), 78F0535A(A2), 78F0536A(A2), 78F0537A(A2)
78K0/KF2	μPD78F0544(A2), 78F0545(A2), 78F0546(A2), 78F0547(A2)	μPD78F0544A(A2), 78F0545A(A2), 78F0546A(A2), 78F0547A(A2)

The following items are described separately for conventional-specification products (μPD78F05xx(A2)) and expanded-specification products (μPD78F05xxA(A2)).

- X1 clock oscillation frequency (**X1 oscillator characteristics**)
- Instruction cycle, peripheral hardware clock frequency, external main system clock frequency, external main system clock input high-level width, and external main system clock input low-level width (**(1) Basic operation** in **AC characteristics**)
- A/D conversion time (**A/D Converter Characteristics**)
- Number of rewrites per chip (**Flash Memory Programming Characteristics**)

Caution The pins mounted depend on the product as follows.

(1) Port functions

Port	78K0/KB2	78K0/KC2			78K0/KD2	78K0/KE2	78K0/KF2
	30/36 Pins	38 Pins	44 Pins	48 Pins	52 Pins	64 Pins	80 Pins
Port 0	P00, P01				P00 to P03	P00 to P06	
Port 1	P10 to P17						
Port 2	P20 to P23	P20 to P25	P20 to P27				
Port 3	P30 to P33						
Port 4	–		P40, P41			P40 to P43	P40 to P47
Port 5	–					P50 to P53	P50 to P57
Port 6	P60, P61	P60 to P63					P60 to P67
Port 7	–	P70, P71	P70 to P73	P70 to P75	P70 to P77		
Port 12	P120 to P122	P120 to P124					
Port 13	–			P130			
Port 14	–			P140		P140, P141	P140 to P145

(The remaining table is on the next page.)

(2) Non-port functions

Port		78K0/KB2	78K0/KC2			78K0/KD2	78K0/KE2	78K0/KF2
		30/36 Pins	38 Pins	44 Pins	48 Pins	52 Pins	64 Pins	80 Pins
Power supply, ground		V_{DD}, EV_{DD}[Note 1], V_{SS}, EV_{SS}[Note 1], AV_{REF}, AV_{SS}	V_{DD}, AV_{REF}, V_{SS}, AV_{SS}				V_{DD}, EV_{DD}, V_{SS}, EV_{SS}, AV_{REF}, AV_{SS}	
Regulator		REGC						
Reset		$\overline{\text{RESET}}$						
Clock oscillation		X1, X2, EXCLK	X1, X2, XT1, XT2, EXCLK, EXCLKS					
Writing to flash memory		FLMD0						
Interrupt		INTP0 to INTP5			INTP0 to INTP6		INTP0 to INTP7	
Key interrupt		–	KR0, KR1	KR0 to KR3		KR0 to KR7		
Timer	TM00	TI000, TI010, TO00						
	TM01	–					TI001[Note 2], TI011[Note 2], TO01[Note 2]	
	TM50	TI50, TO50						
	TM51	TI51, TO51						
	TMH0	TOH0						
	TMH1	TOH1						
Serial interface	UART0	RxD0, TxD0						
	UART6	RxD6, TxD6						
	IIC0	SCL0, SDA0	SCL0, SDA0, EXSCL0					
	CSI10	$\overline{\text{SCK10}}$, SI10, SO10						
	CSI11	–					$\overline{\text{SCK11}}$[Note 2], SI11[Note 2], SO11[Note 2], $\overline{\text{SSI11}}$[Note 2]	
	CSIA0	–						$\overline{\text{SCKA0}}$, SIA0, SOA0, BUSY0, STB0
A/D converter		ANI0 to ANI3	ANI0 to ANI5	ANI0 to ANI7				
Clock output		–			PCL			
Buzzer output		–					BUZ	
Low-voltage detector (LVI)		EXLVI						

Notes 1. This is not mounted onto 30-pin products.

2. This is not mounted onto the 78K0/KE2 products whose flash memory is less than 32 KB.

Caution The pins mounted depend on the product. Refer to Caution at the beginning of this chapter.

Absolute Maximum Ratings (T_A = 25°C) (1/2)

Parameter	Symbol	Conditions	Ratings	Unit
Supply voltage	V_{DD}		−0.5 to +6.5	V
	EV_{DD}		−0.5 to +6.5	V
	V_{SS}		−0.5 to +0.3	V
	EV_{SS}		−0.5 to +0.3	V
	AV_{REF}		−0.5 to V_{DD} + 0.3[Note]	V
	AV_{SS}		−0.5 to +0.3	V
REGC pin input voltage	V_{IREGC}		−0.5 to +3.6 and −0.5 to V_{DD}	V
Input voltage	V_{I1}	P00 to P06, P10 to P17, P20 to P27, P30 to P33, P40 to P47, P50 to P57, P64 to P67, P70 to P77, P120 to P124, P140 to P145, X1, X2, XT1, XT2, $\overline{\text{RESET}}$, FLMD0	−0.3 to V_{DD} + 0.3[Note]	V
	V_{I2}	P60 to P63 (N-ch open drain)	−0.3 to +6.5	V
Output voltage	V_O		−0.3 to V_{DD} + 0.3[Note]	V
Analog input voltage	V_{AN}	ANI0 to ANI7	−0.3 to AV_{REF} + 0.3[Note] and −0.3 to V_{DD} + 0.3[Note]	V

Note Must be 6.5 V or lower.

Caution Product quality may suffer if the absolute maximum rating is exceeded even momentarily for any parameter. That is, the absolute maximum ratings are rated values at which the product is on the verge of suffering physical damage, and therefore the product must be used under conditions that ensure that the absolute maximum ratings are not exceeded.

Remark Unless specified otherwise, the characteristics of alternate-function pins are the same as those of port pins.

Caution The pins mounted depend on the product. Refer to Caution at the beginning of this chapter.

Absolute Maximum Ratings (T_A = 25°C) (2/2)

Parameter	Symbol	Conditions		Ratings	Unit
Output current, high	I_{OH}	Per pin	P00 to P06, P10 to P17, P30 to P33, P40 to P47, P50 to P57, P64 to P67, P70 to P77, P120, P130, P140 to P145	−10	mA
		Total of all pins −80 mA	P00 to P04, P40 to P47, P120, P130, P140 to P145	−25	mA
			P05, P06, P10 to P17, P30 to P33, P50 to P57, P64 to P67, P70 to P77	−55	mA
		Per pin	P20 to P27	−0.5	mA
		Total of all pins		−2	mA
		Per pin	P121 to P124	−1	mA
		Total of all pins		−4	mA
Output current, low	I_{OL}	Per pin	P00 to P06, P10 to P17, P30 to P33, P40 to P47, P50 to P57, P60 to P67, P70 to P77, P120, P130, P140 to P145	30	mA
		Total of all pins 200 mA	P00 to P04, P40 to P47, P120, P130, P140 to P145	60	mA
			P05, P06, P10 to P17, P30 to P33, P50 to P57, P60 to P67, P70 to P77	140	mA
		Per pin	P20 to P27	1	mA
		Total of all pins		5	mA
		Per pin	P121 to P124	4	mA
		Total of all pins		10	mA
Operating ambient temperature	T_A			−40 to +125	°C
Storage temperature	T_{stg}			−65 to +150	°C

Cautions 1. Product quality may suffer if the absolute maximum rating is exceeded even momentarily for any parameter. That is, the absolute maximum ratings are rated values at which the product is on the verge of suffering physical damage, and therefore the product must be used under conditions that ensure that the absolute maximum ratings are not exceeded.

2. The value of the current that can be run per pin must satisfy the value of the current per pin and the total value of the currents of all pins.

Remark Unless specified otherwise, the characteristics of alternate-function pins are the same as those of port pins.

Caution The pins mounted depend on the product. Refer to Caution at the beginning of this chapter.

X1 Oscillator Characteristics

(T_A = –40 to +125°C, 2.7 V ≤ V_{DD} = EV_{DD} ≤ 5.5 V, V_{SS} = EV_{SS} = AV_{SS} = 0 V)

Resonator	Recommended Circuit	Parameter	Conditions		MIN.	TYP.	MAX.	Unit
Ceramic resonator, Crystal resonator	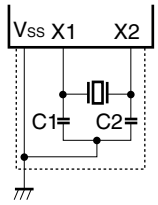	X1 clock oscillation frequency (f_X)Note 1	Conventional-specification Products (μPD78F05xx (A2))	4.0 V ≤ V_{DD} ≤ 5.5 V	1.0Note 2		20.0	MHz
				2.7 V ≤ V_{DD} < 4.0 V	1.0Note 2		10.0	
			Expanded-specification Products (μPD78F05xxA(A2))		1.0Note 2		20.0	MHz

Notes 1. Indicates only oscillator characteristics. Refer to **AC Characteristics** for instruction execution time.

2. It is 2.0 MHz (MIN.) when programming on the board via UART6.

Cautions 1. When using the X1 oscillator, wire as follows in the area enclosed by the broken lines in the above figures to avoid an adverse effect from wiring capacitance.

- **Keep the wiring length as short as possible.**
- **Do not cross the wiring with the other signal lines.**
- **Do not route the wiring near a signal line through which a high fluctuating current flows.**
- **Always make the ground point of the oscillator capacitor the same potential as V_{SS}.**
- **Do not ground the capacitor to a ground pattern through which a high current flows.**
- **Do not fetch signals from the oscillator.**

2. Since the CPU is started by the internal high-speed oscillation clock after a reset release, check the X1 clock oscillation stabilization time using the oscillation stabilization time counter status register (OSTC) by the user. Determine the oscillation stabilization time of the OSTC register and oscillation stabilization time select register (OSTS) after sufficiently evaluating the oscillation stabilization time with the resonator to be used.

Remark For the resonator selection and oscillator constant, customers are requested to either evaluate the oscillation themselves or apply to the resonator manufacturer for evaluation.

Caution The pins mounted depend on the product. Refer to Caution at the beginning of this chapter.

Internal Oscillator Characteristics

(T_A = –40 to +125°C, 2.7 V ≤ V_{DD} = EV_{DD} ≤ 5.5 V, V_{SS} = EV_{SS} = AV_{SS} = 0 V)

Resonator	Parameter	Conditions	MIN.	TYP.	MAX.	Unit
8 MHz internal oscillator	Internal high-speed oscillation clock frequency (f_{RH})[Note]	RSTS = 1	7.6	8.0	8.46	MHz
		RSTS = 0	2.48	5.6	9.86	MHz
240 kHz internal oscillator	Internal low-speed oscillation clock frequency (f_{RL})		216	240	264	kHz

Note Indicates only oscillator characteristics. Refer to **AC Characteristics** for instruction execution time.

Remark RSTS: Bit 7 of the internal oscillation mode register (RCM)

XT1 Oscillator Characteristics[Note 1]

(T_A = –40 to +125°C, 2.7 V ≤ V_{DD} = EV_{DD} ≤ 5.5 V, V_{SS} = EV_{SS} = AV_{SS} = 0 V)

Resonator	Recommended Circuit	Parameter	Conditions	MIN.	TYP.	MAX.	Unit
Crystal resonator	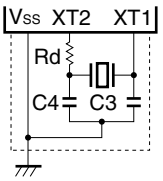	XT1 clock oscillation frequency (f_{XT})[Note 2]		32	32.768	35	kHz

Notes 1. The 78K0/KB2 is not provided with the XT1 oscillator.

2. Indicates only oscillator characteristics. Refer to **AC Characteristics** for instruction execution time.

Cautions 1. When using the XT1 oscillator, wire as follows in the area enclosed by the broken lines in the above figure to avoid an adverse effect from wiring capacitance.

- **Keep the wiring length as short as possible.**
- **Do not cross the wiring with the other signal lines.**
- **Do not route the wiring near a signal line through which a high fluctuating current flows.**
- **Always make the ground point of the oscillator capacitor the same potential as V_{SS}.**
- **Do not ground the capacitor to a ground pattern through which a high current flows.**
- **Do not fetch signals from the oscillator.**

2. The XT1 oscillator is designed as a low-amplitude circuit for reducing power consumption, and is more prone to malfunction due to noise than the X1 oscillator. Particular care is therefore required with the wiring method when the XT1 clock is used.

Remark For the resonator selection and oscillator constant, customers are requested to either evaluate the oscillation themselves or apply to the resonator manufacturer for evaluation.

Caution The pins mounted depend on the product. Refer to Caution at the beginning of this chapter.

DC Characteristics (1/4)

(T_A = −40 to +125°C, 2.7 V ≤ V_{DD} = EV_{DD} ≤ 5.5 V, AV_{REF} ≤ V_{DD}, V_{SS} = EV_{SS} = AV_{SS} = 0 V)

Parameter	Symbol	Conditions		MIN.	TYP.	MAX.	Unit
Output current, high[Note 1]	I_{OH1}	Per pin for P00 to P06, P10 to P17, P30 to P33, P40 to P47, P50 to P57, P64 to P67, P70 to P77, P120, P130, P140 to P145	4.0 V ≤ V_{DD} ≤ 5.5 V			−1.5	mA
			2.7 V ≤ V_{DD} < 4.0 V			−1.0	mA
		Total of P00 to P04, P40 to P47, P120, P130, P140 to P145[Note 3]	4.0 V ≤ V_{DD} ≤ 5.5 V			−6.0	mA
			2.7 V ≤ V_{DD} < 4.0 V			−4.0	mA
		Total of P05, P06, P10 to P17, P30 to P33, P50 to P57, P64 to P67, P70 to P77[Note 3]	4.0 V ≤ V_{DD} ≤ 5.5 V			−10.0	mA
			2.7 V ≤ V_{DD} < 4.0 V			−8.0	mA
		Total of all the pins above[Note 3]	4.0 V ≤ V_{DD} ≤ 5.5 V			−14.0	mA
			2.7 V ≤ V_{DD} < 4.0 V			−12.0	mA
	I_{OH2}	Per pin for P20 to P27	AV_{REF} = V_{DD}			−0.1	mA
		Per pin for P121 to P124				−0.1	mA
Output current, low[Note 2]	I_{OL1}	Per pin for P00 to P06, P10 to P17, P30 to P33, P40 to P47, P50 to P57, P64 to P67, P70 to P77, P120, P130, P140 to P145	4.0 V ≤ V_{DD} ≤ 5.5 V			4.0	mA
			2.7 V ≤ V_{DD} < 4.0 V			2.0	mA
		Per pin for P60 to P63	4.0 V ≤ V_{DD} ≤ 5.5 V			8.0	mA
			2.7 V ≤ V_{DD} < 4.0 V			2.0	mA
		Total of P00 to P04, P40 to P47, P120, P130, P140 to P145[Note 3]	4.0 V ≤ V_{DD} ≤ 5.5 V			10.0	mA
			2.7 V ≤ V_{DD} < 4.0 V			8.0	mA
		Total of P05, P06, P10 to P17, P30 to P33, P50 to P57, P60 to P67, P70 to P77[Note 3]	4.0 V ≤ V_{DD} ≤ 5.5 V			20.0	mA
			2.7 V ≤ V_{DD} < 4.0 V			16.0	mA
		Total of all the pins above[Note 3]	4.0 V ≤ V_{DD} ≤ 5.5 V			30.0	mA
			2.7 V ≤ V_{DD} < 4.0 V			24.0	mA
	I_{OL2}	Per pin for P20 to P27	AV_{REF} = V_{DD}			0.4	mA
		Per pin for P121 to P124				0.4	mA

Notes 1. Value of current at which the device operation is guaranteed even if the current flows from V_{DD} to an output pin.

2. Value of current at which the device operation is guaranteed even if the current flows from an output pin to GND.

3. Specification under conditions where the duty factor is 70% (time for which current is output is 0.7 × t and time for which current is not output is 0.3 × t, where t is a specific time). The total output current of the pins at a duty factor of other than 70% can be calculated by the following expression.

- Where the duty factor of I_{OH} is n%: Total output current of pins = (I_{OH} × 0.7)/(n × 0.01)

<Example> Where the duty factor is 50%, I_{OH} = −10.0 mA

Total output current of pins = (−10.0 × 0.7)/(50 × 0.01) = −14.0 mA

However, the current that is allowed to flow into one pin does not vary depending on the duty factor. A current higher than the absolute maximum rating must not flow into one pin.

Remark Unless specified otherwise, the characteristics of alternate-function pins are the same as those of port pins.

Caution The pins mounted depend on the product. Refer to Caution at the beginning of this chapter.

DC Characteristics (2/4)

(T_A = –40 to +125°C, 2.7 V ≤ V_{DD} = EV_{DD} ≤ 5.5 V, AV_{REF} ≤ V_{DD}, V_{SS} = EV_{SS} = AV_{SS} = 0 V)

Parameter	Symbol	Conditions		MIN.	TYP.	MAX.	Unit
Input voltage, high (products whose flash memory is at least 48 KB)[Note 1]	V_{IH1}	P02, P12, P13, P15, P40 to P47, P50 to P57, P64 to P67, P121 to P124, P144, P145		0.7V_{DD}		V_{DD}	V
	V_{IH2}	P00, P01, P03 to P06, P10, P11, P14, P16, P17, P30 to P33, P70 to P77, P120, P140 to P143, EXCLK, EXCLKS, $\overline{\text{RESET}}$		0.8V_{DD}		V_{DD}	V
	V_{IH3}	P20 to P27	AV_{REF} = V_{DD}	0.7AV_{REF}		AV_{REF}	V
	V_{IH4}	P60 to P63		0.7V_{DD}		6.0	V
Input voltage, high (products whose flash memory is less than 32 KB)[Note 2]	V_{IH1}	P02 to P06, P12, P13, P15, P40 to P43, P50 to P53, P121 to P124		0.7V_{DD}		V_{DD}	V
	V_{IH2}	P00, P01, P10, P11, P14, P16, P17, P30 to P33, P70 to P77, P120, P140, P141, EXCLK, EXCLKS, $\overline{\text{RESET}}$		0.8V_{DD}		V_{DD}	V
	V_{IH3}	P20 to P27	AV_{REF} = V_{DD}	0.7AV_{REF}		AV_{REF}	V
	V_{IH4}	P60 to P63		0.7V_{DD}		6.0	V
Input voltage, low (products whose flash memory is at least 48 KB)[Note 1]	V_{IL1}	P02, P12, P13, P15, P40 to P47, P50 to P57, P60 to P67, P121 to P124, P144, P145		0		0.3V_{DD}	V
	V_{IL2}	P00, P01, P03 to P06, P10, P11, P14, P16, P17, P30 to P33, P70 to P77, P120, P140 to P143, EXCLK, EXCLKS, $\overline{\text{RESET}}$		0		0.2V_{DD}	V
	V_{IL3}	P20 to P27	AV_{REF} = V_{DD}	0		0.3AV_{REF}	V
Input voltage, low (products whose flash memory is less than 32 KB)[Note 2]	V_{IL1}	P02 to P06, P12, P13, P15, P40 to P43, P50 to P53, P60 to P63, P121 to P124		0		0.3V_{DD}	V
	V_{IL2}	P00, P01, P10, P11, P14, P16, P17, P30 to P33, P70 to P77, P120, P140, P141, EXCLK, EXCLKS, $\overline{\text{RESET}}$		0		0.2V_{DD}	V
	V_{IL3}	P20 to P27	AV_{REF} = V_{DD}	0		0.3AV_{REF}	V
Output voltage, high	V_{OH1}	P00 to P06, P10 to P17, P30 to P33, P40 to P47, P50 to P57, P64 to P67, P70 to P77, P120, P130, P140 to P145	4.0 V ≤ V_{DD} ≤ 5.5 V, I_{OH1} = –1.5 mA	V_{DD} – 0.7			V
			2.7 V ≤ V_{DD} < 4.0 V, I_{OH1} = –1.0 mA	V_{DD} – 0.5			V
	V_{OH2}	P20 to P27	AV_{REF} = V_{DD}, I_{OH2} = –100 μA	V_{DD} – 0.5			V
		P121 to P124	I_{OH2} = –100 μA	V_{DD} – 0.5			V

Notes 1. Supported products: 78K0/KD2 and 78K0/KE2 whose flash memory is at least 48 KB, and 78K0/KF2

2. Supported products: 78K0/KD2 and 78K0/KE2 whose flash memory is less than 32 KB, 78K0/KB2, and 78K0/KC2

Remark Unless specified otherwise, the characteristics of alternate-function pins are the same as those of port pins.

Caution The pins mounted depend on the product. Refer to Caution at the beginning of this chapter.

DC Characteristics (3/4)

(T_A = –40 to +125°C, 2.7 V ≤ V_{DD} = EV_{DD} ≤ 5.5 V, AV_{REF} ≤ V_{DD}, V_{SS} = EV_{SS} = AV_{SS} = 0 V)

Parameter	Symbol	Conditions			MIN.	TYP.	MAX.	Unit
Output voltage, low	V_{OL1}	P00 to P06, P10 to P17, P30 to P33, P40 to P47, P50 to P57, P64 to P67, P70 to P77, P120, P130, P140 to P145	4.0 V ≤ V_{DD} ≤ 5.5 V, I_{OL1} = 4.0 mA				0.7	V
			2.7 V ≤ V_{DD} < 4.0 V, I_{OL1} = 2.0 mA				0.7	V
	V_{OL2}	P20 to P27	AV_{REF} = V_{DD}, I_{OL2} = 0.4 mA				0.4	V
		P121 to P124	I_{OL2} = 0.4 mA				0.4	V
	V_{OL3}	P60 to P63	4.0 V ≤ V_{DD} ≤ 5.5 V, I_{OL1} = 8.0 mA				2.0	V
			4.0 V ≤ V_{DD} ≤ 5.5 V, I_{OL1} = 2.0 mA				0.6	V
			2.7 V ≤ V_{DD} < 4.0 V, I_{OL1} = 2.0 mA				0.6	V
Input leakage current, high	I_{LIH1}	P00 to P06, P10 to P17, P30 to P33, P40 to P47, P50 to P57, P60 to P67, P70 to P77, P120, P140 to P145, FLMD0, $\overline{\text{RESET}}$	V_I = V_{DD}				5	μA
	I_{LIH2}	P20 to P27	V_I = AV_{REF} = V_{DD}				5	μA
	I_{LIH3}	P121 to 124 (X1, X2, XT1, XT2)	V_I = V_{DD}	I/O port mode			5	μA
				OSC mode			20	μA
Input leakage current, low	I_{LIL1}	P00 to P06, P10 to P17, P30 to P33, P40 to P47, P50 to P57, P60 to P67, P70 to P77, P120, P140 to P145, FLMD0, $\overline{\text{RESET}}$	V_I = V_{SS}				–5	μA
	I_{LIL2}	P20 to P27	V_I = V_{SS}, AV_{REF} = V_{DD}				–5	μA
	I_{LIL3}	P121 to 124 (X1, X2, XT1, XT2)	V_I = V_{SS}	I/O port mode			–5	μA
				OSC mode			–20	μA
Pull-up resistor	R_U	V_I = V_{SS}			10	20	100	kΩ
FLMD0 supply voltage	V_{IL}	In normal operation mode			0		0.2V_{DD}	V
	V_{IH}	In self-programming mode			0.8V_{DD}		V_{DD}	V

Remark Unless specified otherwise, the characteristics of alternate-function pins are the same as those of port pins.

Caution The pins mounted depend on the product. Refer to Caution at the beginning of this chapter.

DC Characteristics (4/4)

(T_A = −40 to +125°C, 2.7 V ≤ V_{DD} = EV_{DD} ≤ 5.5 V, AV_{REF} ≤ V_{DD}, V_{SS} = EV_{SS} = AV_{SS} = 0 V)

Parameter	Symbol	Conditions			MIN.	TYP.	MAX.	Unit
Supply current[Note 1]	I_{DD1}	Operating mode	f_{XH} = 20 MHz, V_{DD} = 5.0 V [Note 2]	Square wave input		3.2	8.3	mA
				Resonator connection		4.5	10.5	mA
			f_{XH} = 10 MHz, V_{DD} = 5.0 V [Notes 2, 3]	Square wave input		1.6	4.2	mA
				Resonator connection		2.3	5.9	mA
			f_{XH} = 10 MHz V_{DD} = 3.0 V [Notes 2, 3]	Square wave input		1.5	4.1	mA
				Resonator connection		2.2	4.8	mA
			f_{XH} = 5 MHz, V_{DD} = 3.0 V [Notes 2, 3]	Square wave input		0.9	2.4	mA
				Resonator connection		1.3	3.0	mA
			f_{RH} = 8 MHz, V_{DD} = 5.0 V [Note 4]			1.4	3.8	mA
			f_{SUB} = 32.768 kHz, V_{DD} = 5.0 V [Note 5]	Square wave input		6	138	μA
				Resonator connection		15	145	μA
	I_{DD2}	HALT mode	f_{XH} = 20 MHz, V_{DD} = 5.0 V [Note 2]	Square wave input		0.8	3.9	mA
				Resonator connection		2.0	6.6	mA
			f_{XH} = 10 MHz, V_{DD} = 5.0 V [Notes 2, 3]	Square wave input		0.4	2.0	mA
				Resonator connection		1.0	3.6	mA
			f_{XH} = 5 MHz, V_{DD} = 3.0 V [Notes 2, 3]	Square wave input		0.2	1.0	mA
				Resonator connection		0.5	1.7	mA
			f_{RH} = 8 MHz, V_{DD} = 5.0 V [Note 4]			0.4	1.8	mA
			f_{SUB} = 32.768 kHz, V_{DD} = 5.0 V [Note 5]	Square wave input		3.0	133	μA
				Resonator connection		12	138	μA
	I_{DD3}[Note 6]	STOP mode				1	100	μA
			T_A = −40 to +70 °C			1	10	μA
A/D converter operating current	I_{ADC}[Note 7]	2.7 V ≤ AV_{REF} ≤ V_{DD}, ADCS = 1				0.86	2.9	mA
Watchdog timer operating current	I_{WDT}[Note 8]	During 240 kHz internal low-speed oscillation clock operation				5	15	μA
LVI operating current	I_{LVI}[Note 9]					9	27	μA

Remarks 1. f_{XH}: High-speed system clock frequency (X1 clock oscillation frequency or external main system clock frequency)

2. f_{RH}: Internal high-speed oscillation clock frequency

3. f_{SUB}: Subsystem clock frequency (XT1 clock oscillation frequency or external subsystem clock frequency)

(Notes on next page)

Notes 1. Total current flowing into the internal power supply (V_{DD}, EV_{DD}), including the peripheral operation current and the input leakage current flowing when the level of the input pin is fixed to V_{DD} or V_{SS}. However, the current flowing into the pull-up resistors and the output current of the port are not included.

2. Not including the operating current of the 8 MHz internal oscillator, 240 kHz internal oscillator, and XT1 oscillator, and the current flowing into the A/D converter, watchdog timer and LVI circuit.

3. When AMPH (bit 0 of clock operation mode select register (OSCCTL)) = 0.

4. Not including the operating current of the X1 oscillator, XT1 oscillator, and 240 kHz internal oscillator, and the current flowing into the A/D converter, watchdog timer and LVI circuit.

5. Not including the operating current of the X1 oscillation, 8 MHz internal oscillator and 240 kHz internal oscillator, and the current flowing into the A/D converter, watchdog timer and LVI circuit.

6. Not including the operating current of the 240 kHz internal oscillator and XT1 oscillation, and the current flowing into the A/D converter, watchdog timer and LVI circuit.

7. Current flowing only to the A/D converter (AV_{REF}). The current value of the 78K0/Kx2 microcontrollers is the sum of I_{DD1} or I_{DD2} and I_{ADC} when the A/D converter operates in an operation mode or the HALT mode.

8. Current flowing only to the watchdog timer (including the operating current of the 240 kHz internal oscillator). The current value of the 78K0/Kx2 microcontrollers is the sum of I_{DD1}, I_{DD2} or I_{DD3} and I_{WDT} when the watchdog timer operates.

9. Current flowing only to the LVI circuit. The current value of the 78K0/Kx2 microcontrollers is the sum of I_{DD1}, I_{DD2} or I_{DD3} and I_{LVI} when the LVI circuit operates.

Caution The pins mounted depend on the product. Refer to Caution at the beginning of this chapter.

AC Characteristics

(1) Basic operation (1/2)

(T_A = –40 to +125°C, 2.7 V ≤ V_{DD} = EV_{DD} ≤ 5.5 V, AV_{REF} ≤ V_{DD}, V_{SS} = EV_{SS} = AV_{SS} = 0 V)

Parameter	Symbol	Conditions			MIN.	TYP.	MAX.	Unit
Instruction cycle (minimum instruction execution time)	T_{CY}	Main system clock (f_{XP}) operation	Conventional-specification Products (μPD78F05xx (A2))	4.0 V ≤ V_{DD} ≤ 5.5 V	0.1		32	μs
				2.7 V ≤ V_{DD} < 4.0 V	0.2		32	μs
			Expanded-specification Products (μPD78F05xxA (A2))	2.7 V ≤ V_{DD} ≤ 5.5 V	0.1		32	μs
		Subsystem clock (f_{SUB}) operation[Note 1]			114	122	125	μs
Peripheral hardware clock frequency	f_{PRS}	f_{PRS} = f_{XH} (XSEL = 1)	Conventional-specification Products (μPD78F05xx (A2))	4.0 V ≤ V_{DD} ≤ 5.5 V			20	MHz
				2.7 V ≤ V_{DD} < 4.0 V			10	MHz
			Expanded-specification Products (μPD78F05xxA (A2))	4.0 V ≤ V_{DD} ≤ 5.5 V			20	MHz
				2.7 V ≤ V_{DD} < 4.0 V [Note 2]			20	MHz
		f_{PRS} = f_{RH} (XSEL = 0)		2.7 V ≤ V_{DD} ≤ 5.5 V	7.6		8.4	MHz
External main system clock frequency	f_{EXCLK}	Conventional-specification Products (μPD78F05xx(A2))		4.0 V ≤ V_{DD} ≤ 5.5 V	1.0[Note 3]		20.0	MHz
				2.7 V ≤ V_{DD} < 4.0 V	1.0[Note 3]		10.0	MHz
		Expanded-specification Products (μPD78F05xxA(A2))		2.7 V ≤ V_{DD} ≤ 5.5 V	1.0[Note 3]		20.0	MHz
External main system clock input high-level width, low-level width	t_{EXCLKH}, t_{EXCLKL}	Conventional-specification Products (μPD78F05xx(A2))		4.0 V ≤ V_{DD} ≤ 5.5 V	24			ns
				2.7 V ≤ V_{DD} < 4.0 V	48			ns
		Expanded-specification Products (μPD78F05xxA(A2))		2.7 V ≤ V_{DD} ≤ 5.5 V	24			ns

Notes 1. The 78K0/KB2 is not provided with a subsystem clock.

2. Characteristics of the main system clock frequency. Set the division clock to be set by a peripheral function to f_{XH}/2 (10 MHz) or less. The multiplier/divider, however, can operate on f_{XH} (20 MHz).

3. 2.0 MHz (MIN.) when using UART6 during on-board programming.

Caution The pins mounted depend on the product. Refer to Caution 2 at the beginning of this chapter.

(1) Basic operation (2/2)

(T_A = –40 to +125°C, 2.7 V ≤ V_{DD} = EV_{DD} ≤ 5.5 V, AV_{REF} ≤ V_{DD}, V_{SS} = EV_{SS} = AV_{SS} = 0 V)

Parameter	Symbol	Conditions	MIN.	TYP.	MAX.	Unit
External subsystem clock frequency[Note 1]	f_{EXCLKS}		32	32.768	35	kHz
External subsystem clock input high-level width, low-level width[Note 1]	$t_{EXCLKSH}$, $t_{EXCLKSL}$		12			μs
TI000, TI010, TI001, TI011 input high-level width, low-level width	t_{TIH0}, t_{TIL0}	4.0 V ≤ V_{DD} ≤ 5.5 V	$2/f_{sam}$ + 0.1[Note 2]			μs
		2.7 V ≤ V_{DD} < 4.0 V	$2/f_{sam}$ + 0.2[Note 2]			μs
TI50, TI51 input frequency	f_{TI5}				10	MHz
TI50, TI51 input high-level width, low-level width	t_{TIH5}, t_{TIL5}		50			ns
Interrupt input high-level width, low-level width	t_{INTH}, t_{INTL}		1			μs
Key interrupt input low-level width	t_{KR}		250			ns
$\overline{RESET}$ low-level width	t_{RSL}		10			μs

Notes 1. The 78K0/KB2 is not provided with a subsystem clock.

2. Selection of f_{sam} = f_{PRS}, $f_{PRS}/4$, $f_{PRS}/256$, or f_{PRS}, $f_{PRS}/16$, $f_{PRS}/64$ is possible using bits 0 and 1 (PRM000, PRM001 or PRM010, PRM011) of prescaler mode registers 00 and 01 (PRM00, PRM01). Note that when selecting the TI000 or TI001 valid edge as the count clock, f_{sam} = f_{PRS}.

Caution The pins mounted depend on the product. Refer to Caution at the beginning of this chapter.

T_{CY} vs. V_{DD} (Main System Clock Operation)

<1> Conventional-specification Products (μPD78F05xx(A2))

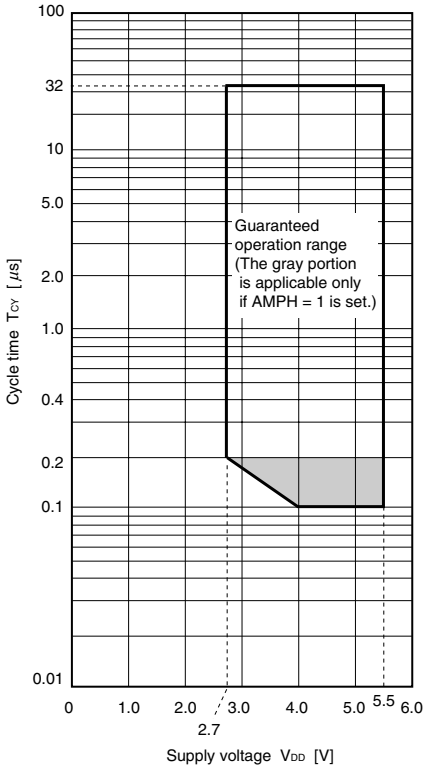

<2> Expanded-specification Products (μPD78F05xxA(A2))

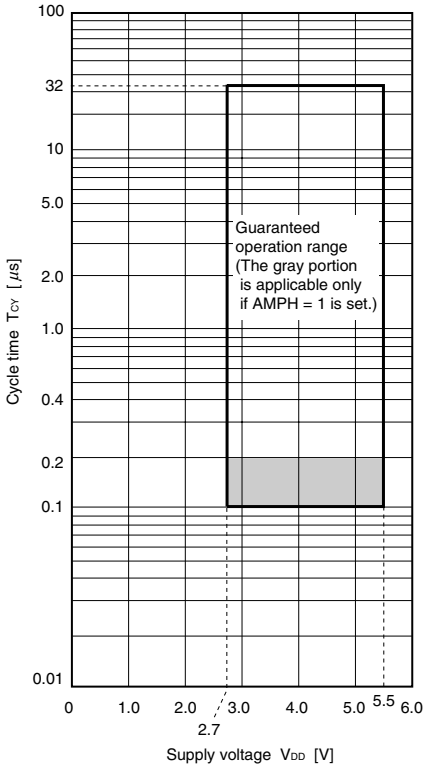

Caution The pins mounted depend on the product. Refer to Caution at the beginning of this chapter.

AC Timing Test Points

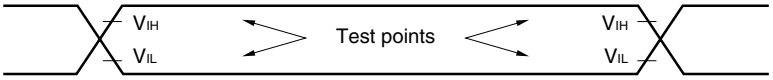

External Main System Clock Timing, External Subsystem Clock Timing

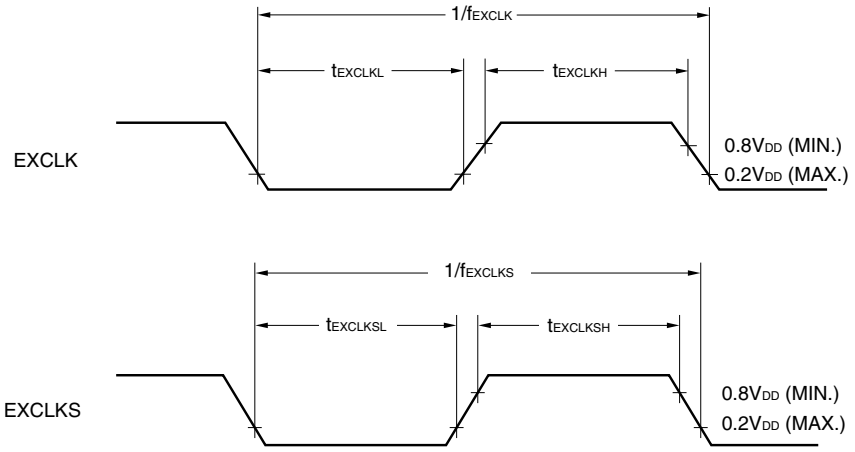

Caution The pins mounted depend on the product. Refer to Caution at the beginning of this chapter.

TI Timing

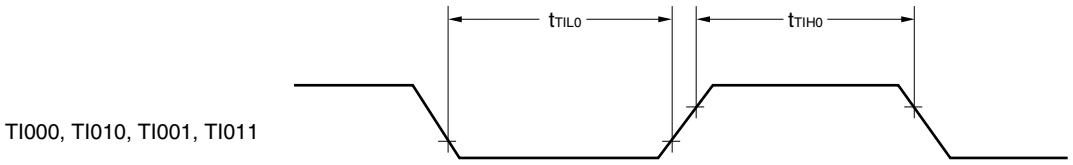

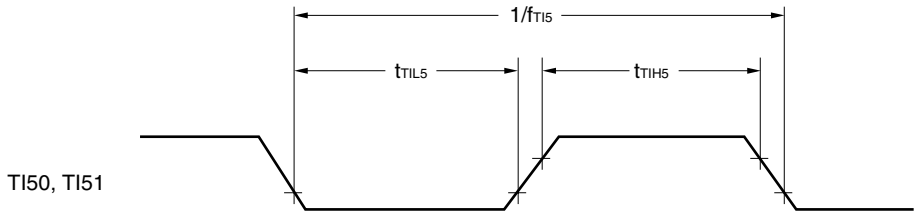

Interrupt Request Input Timing

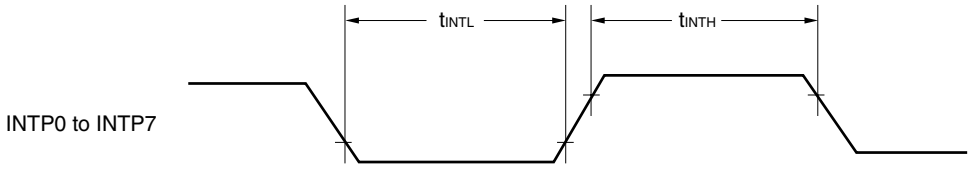

Key Interrupt Input Timing

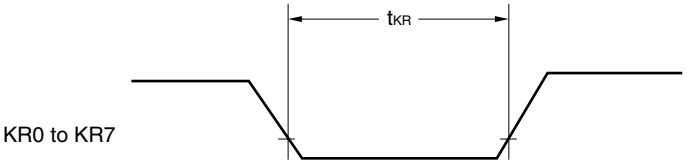

$\overline{\text{RESET}}$ Input Timing

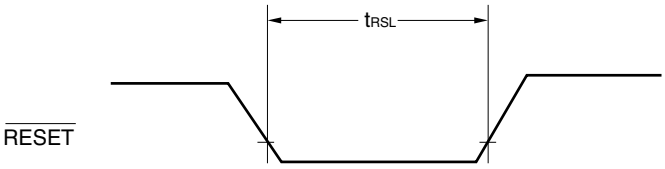

Caution The pins mounted depend on the product. Refer to Caution at the beginning of this chapter.

(2) Serial interface

(T_A = –40 to +125°C, 2.7 V ≤ V_{DD} = EV_{DD} ≤ 5.5 V, AV_{REF} ≤ V_{DD}, V_{SS} = EV_{SS} = AV_{SS} = 0 V)

(a) UART6 (dedicated baud rate generator output)

Parameter	Symbol	Conditions	MIN.	TYP.	MAX.	Unit
Transfer rate					625	kbps

(b) UART0 (dedicated baud rate generator output)

Parameter	Symbol	Conditions	MIN.	TYP.	MAX.	Unit
Transfer rate					625	kbps

(c) IIC0

Parameter	Symbol	Conditions	Standard Mode		High-Speed Mode		Unit
			MIN.	MAX.	MIN.	MAX.	
SCL0 clock frequency	f_{SCL}		0	100	0	400	kHz
Setup time of restart condition	$t_{SU:STA}$		4.7	–	0.6	–	μs
Hold time[Note 1]	$t_{HD:STA}$		4.0	–	0.6	–	μs
Hold time when SCL0 = "L"	t_{LOW}	Internal clock operation	4.7	–	1.3	–	μs
		EXSCL0 clock (6.4 MHz) operation	4.7	–	1.25	–	μs
Hold time when SCL0 = "H"	t_{HIGH}		4.0	–	0.6	–	μs
Data setup time (reception)	$t_{SU:DAT}$		250	–	100	–	ns
Data hold time (transmission)[Note 2]	$t_{HD:DAT}$	$f_W = f_{XH}/2^N$ or $f_W = f_{EXSCL0}$ selected[Note 3]	0	3.45	0	0.9[Note 4]	μs
						1.00[Note 5]	
		$f_W = f_{RH}/2^N$ selected[Note 3]	0	3.45	0	1.05	μs
Setup time of stop condition	$t_{SU:STO}$		4.0	–	0.6	–	μs
Bus free time	t_{BUF}		4.7	–	1.3	–	μs

Notes 1. The first clock pulse is generated after this period when the start/restart condition is detected.

2. The maximum value (MAX.) of $t_{HD:DAT}$ is during normal transfer and a wait state is inserted in the $\overline{ACK}$ (acknowledge) timing.

3. f_W indicates the IIC0 transfer clock selected by the IICCL and IICX0 registers.

4. When $f_W \geq 4.4$ MHz is selected

5. When $f_W < 4.4$ MHz is selected

Caution The pins mounted depend on the product. Refer to Caution at the beginning of this chapter.

(d) CSI1n (master mode, $\overline{SCK1n}$… internal clock output)

Parameter	Symbol	Conditions	MIN.	TYP.	MAX.	Unit
$\overline{SCK1n}$ cycle time	t_{KCY1}	4.0 V ≤ V_{DD} ≤ 5.5 V	200			ns
		2.7 V ≤ V_{DD} < 4.0 V	400			ns
$\overline{SCK1n}$ high-/low-level width	t_{KH1}, t_{KL1}	4.0 V ≤ V_{DD} ≤ 5.5 V	$t_{KCY1}/2 - 20$ Note 1			ns
		2.7 V ≤ V_{DD} < 4.0 V	$t_{KCY1}/2 - 30$ Note 1			ns
SI1n setup time (to $\overline{SCK1n}$↑)	t_{SIK1}	4.0 V ≤ V_{DD} ≤ 5.5 V	70			ns
		2.7 V ≤ V_{DD} < 4.0 V	100			ns
SI1n hold time (from $\overline{SCK1n}$↑)	t_{KSI1}		30			ns
Delay time from $\overline{SCK1n}$↓ to SO1n output	t_{KSO1}	C = 50 pF Note 2			40	ns

Notes 1. This value is when high-speed system clock (f_{XH}) is used.

2. C is the load capacitance of the $\overline{SCK1n}$ and SO1n output lines.

(e) CSI1n (slave mode, $\overline{SCK1n}$… external clock input)

Parameter	Symbol	Conditions	MIN.	TYP.	MAX.	Unit
$\overline{SCK1n}$ cycle time	t_{KCY2}		400			ns
$\overline{SCK1n}$ high-/low-level width	t_{KH2}, t_{KL2}		$t_{KCY2}/2$			ns
SI1n setup time (to $\overline{SCK1n}$↑)	t_{SIK2}		80			ns
SI1n hold time (from $\overline{SCK1n}$↑)	t_{KSI2}		50			ns
Delay time from $\overline{SCK1n}$↓ to SO1n output	t_{KSO2}	C = 50 pF Note			120	ns

Note C is the load capacitance of the SO1n output line.

Remark n = 0, 1

Caution The pins mounted depend on the product. Refer to Caution at the beginning of this chapter.

(f) CSIA0 (master mode, $\overline{\text{SCKA0}}$…internal clock output)

Parameter	Symbol	Conditions		MIN.	TYP.	MAX.	Unit
$\overline{\text{SCKA0}}$ cycle time	t_{KCY3}	4.0 V ≤ V_{DD} ≤ 5.5 V		600			ns
		2.7 V ≤ V_{DD} < 4.0 V		1200			ns
$\overline{\text{SCKA0}}$ high-/low-level width	t_{KH3}, t_{KL3}	4.0 V ≤ V_{DD} ≤ 5.5 V		$t_{KCY3}/2 - 50$			ns
		2.7 V ≤ V_{DD} < 4.0 V		$t_{KCY3}/2 - 100$			ns
SIA0 setup time (to $\overline{\text{SCKA0}}$↑)	t_{SIK3}			100			ns
SIA0 hold time (from $\overline{\text{SCKA0}}$↑)	t_{KSI3}			300			ns
Delay time from $\overline{\text{SCKA0}}$↓ to SOA0 output	t_{KSO3}	C = 100 pF[Note]	4.0 V ≤ V_{DD} ≤ 5.5 V			200	ns
			2.7 V ≤ V_{DD} < 4.0 V			300	ns
Time from $\overline{\text{SCKA0}}$↑ to STB0↑	t_{SBD}			$t_{KCY3}/2 - 100$			ns
Strobe signal high-level width	t_{SBW}	4.0 V ≤ V_{DD} ≤ 5.5 V		$t_{KCY3} - 30$			ns
		2.7 V ≤ V_{DD} < 4.0 V		$t_{KCY3} - 60$			ns
Busy signal setup time (to busy signal detection timing)	t_{BYS}			100			ns
Busy signal hold time (from busy signal detection timing)	t_{BYH}			100			ns
Time from busy inactive to $\overline{\text{SCKA0}}$↓	t_{SPS}	4.0 V ≤ V_{DD} ≤ 5.5 V				$2t_{KCY3} + 100$	ns
		2.7 V ≤ V_{DD} < 4.0 V				$2t_{KCY3} - 150$	ns

Note C is the load capacitance of the $\overline{\text{SCKA0}}$ and SOA0 output lines.

Caution The pins mounted depend on the product. Refer to Caution at the beginning of this chapter.

(g) CSIA0 (slave mode, $\overline{\text{SCKA0}}$…external clock input)

Parameter	Symbol	Conditions		MIN.	TYP.	MAX.	Unit
$\overline{\text{SCKA0}}$ cycle time	t_{KCY4}	4.0 V ≤ V_{DD} ≤ 5.5 V		600			ns
		2.7 V ≤ V_{DD} < 4.0 V		1200			ns
$\overline{\text{SCKA0}}$ high-/low-level width	t_{KH4}, t_{KL4}	4.0 V ≤ V_{DD} ≤ 5.5 V		300			ns
		2.7 V ≤ V_{DD} < 4.0 V		600			ns
SIA0 setup time (to $\overline{\text{SCKA0}}$↑)	t_{SIK4}			100			ns
SIA0 hold time (from $\overline{\text{SCKA0}}$↑)	t_{KSI4}			$2/f_W$ + 100 Note 1			ns
Delay time from $\overline{\text{SCKA0}}$↓ to SOA0 output	t_{KSO4}	C = 100 pF Note 2	4.0 V ≤ V_{DD} ≤ 5.5 V			$2/f_W$ + 100 Note 1	ns
			2.7 V ≤ V_{DD} < 4.0 V			$2/f_W$ + 200 Note 1	ns
$\overline{\text{SCKA0}}$ rise/fall time	t_{R4}, t_{F4}					1000	ns

Notes 1. f_W is the CSIA0 base clock selected by the CSIS0 register.

2. C is the load capacitance of the SOA0 output line.

Caution The pins mounted depend on the product. Refer to Caution at the beginning of this chapter.

Serial Transfer Timing (1/2)

IIC0:

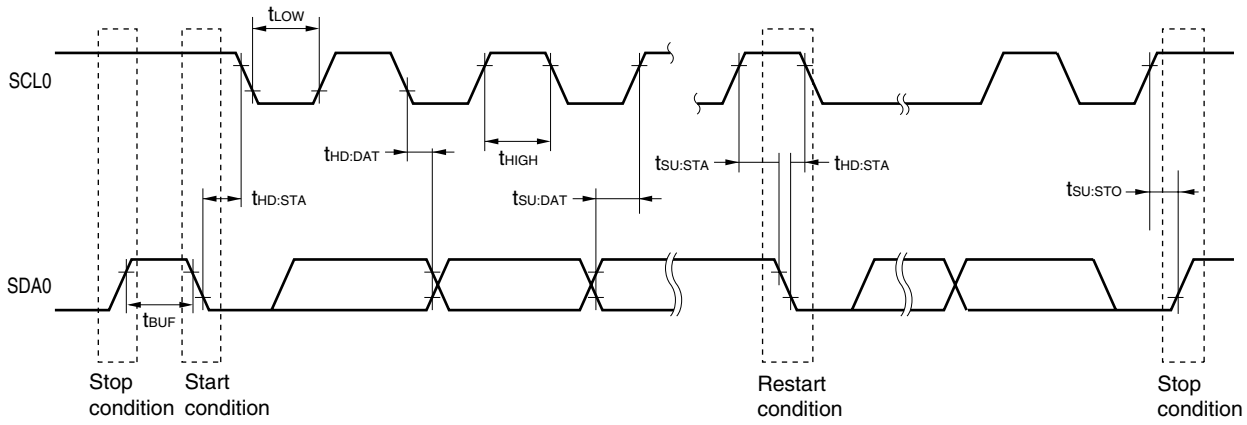

CSI1n:

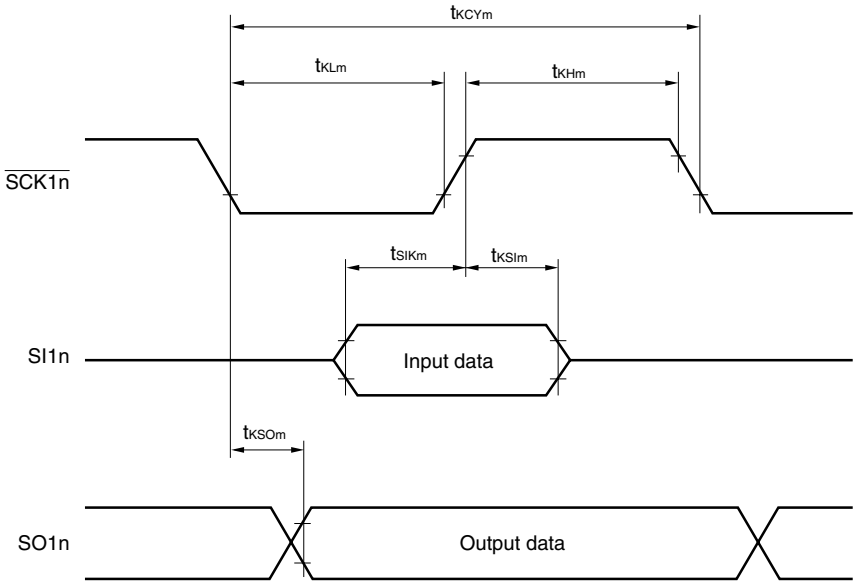

Remark m = 1, 2
n = 0, 1

Caution The pins mounted depend on the product. Refer to Caution at the beginning of this chapter.

Serial Transfer Timing (2/2)

CSIA0:

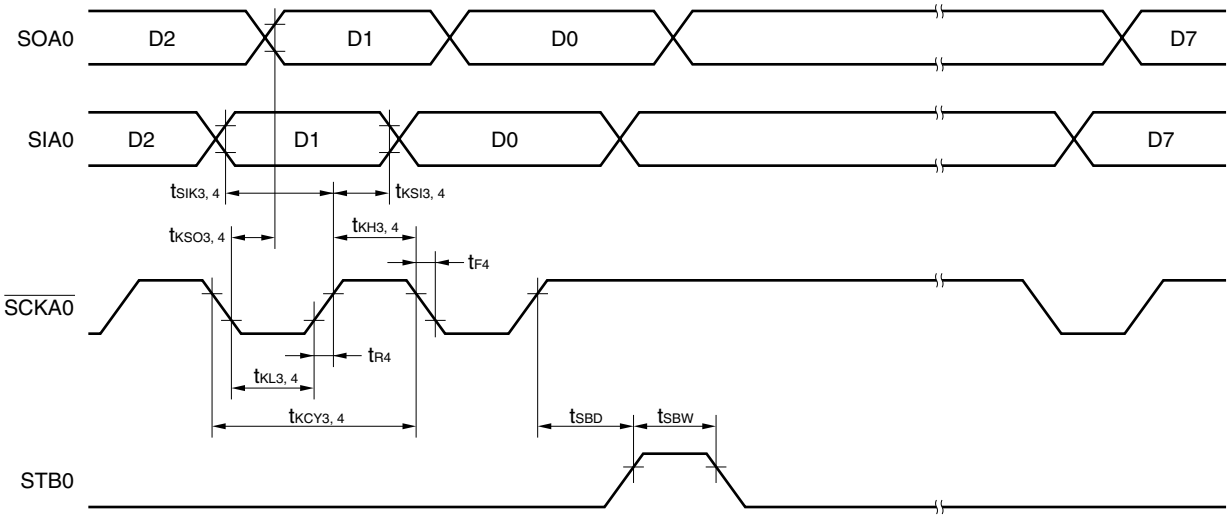

CSIA0 (busy processing):

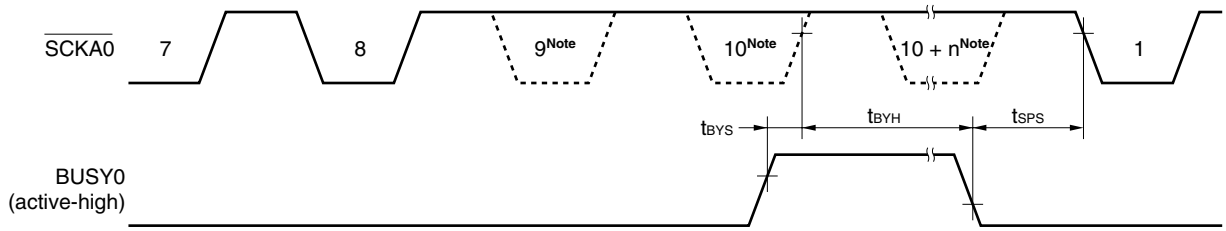

Note SCKA0 does not become low level here, but the timing is illustrated so that the timing specifications can be shown.

Caution The pins mounted depend on the product. Refer to Caution at the beginning of this chapter.

A/D Converter Characteristics

(T_A = –40 to +125°C, 2.7 V ≤ AV_{REF} ≤ V_{DD} = EV_{DD} ≤ 5.5 V, V_{SS} = EV_{SS} = AV_{SS} = 0 V)

Parameter	Symbol	Conditions		MIN.	TYP.	MAX.	Unit
Resolution	R_{ES}					10	bit
Overall error[Notes 1, 2]	A_{INL}	4.0 V ≤ AV_{REF} ≤ 5.5 V				±0.4	%FSR
		2.7 V ≤ AV_{REF} < 4.0 V				±0.6	%FSR
Conversion time	t_{CONV}	Conventional-specification Products (μPD78F05xx(A2))	4.0 V ≤ AV_{REF} ≤ 5.5 V	6.1		36.7	μs
			2.7 V ≤ AV_{REF} < 4.0 V	12.2		36.7	μs
		Expanded-specification Products (μPD78F05xxA (A2))	4.0 V ≤ AV_{REF} ≤ 5.5 V	6.1		66.6	μs
			2.7 V ≤ AV_{REF} < 4.0 V	12.2		66.6	μs
Zero-scale error[Notes 1, 2]	E_{ZS}	4.0 V ≤ AV_{REF} ≤ 5.5 V				±0.4	%FSR
		2.7 V ≤ AV_{REF} < 4.0 V				±0.6	%FSR
Full-scale error[Notes 1, 2]	E_{FS}	4.0 V ≤ AV_{REF} ≤ 5.5 V				±0.4	%FSR
		2.7 V ≤ AV_{REF} < 4.0 V				±0.6	%FSR
Integral non-linearity error[Note 1]	I_{LE}	4.0 V ≤ AV_{REF} ≤ 5.5 V				±2.5	LSB
		2.7 V ≤ AV_{REF} < 4.0 V				±4.5	LSB
Differential non-linearity error[Note 1]	D_{LE}	4.0 V ≤ AV_{REF} ≤ 5.5 V				±1.5	LSB
		2.7 V ≤ AV_{REF} < 4.0 V				±2.0	LSB
Analog input voltage	V_{AIN}			AV_{SS}		AV_{REF}	V

Notes 1. Excludes quantization error (±1/2 LSB).

2. This value is indicated as a ratio (%FSR) to the full-scale value.

Caution The pins mounted depend on the product. Refer to Caution at the beginning of this chapter.

1.59 V POC Circuit Characteristics (T_A = –40 to +125°C, V_{SS} = EV_{SS} = 0 V)

Parameter	Symbol	Conditions	MIN.	TYP.	MAX.	Unit
Detection voltage	V_{POC}		1.44	1.59	1.74	V
Power supply voltage rise inclination	t_{PTH}	V_{DD}: 0 V → change inclination of V_{POC}	0.5			V/ms
Minimum pulse width	t_{PW}		200			μs

1.59 V POC Circuit Timing

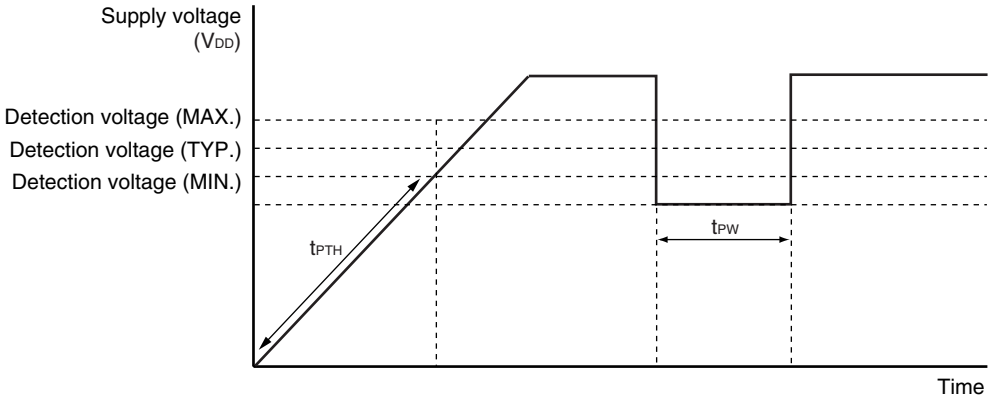

Caution The pins mounted depend on the product. Refer to Caution at the beginning of this chapter.

Supply Voltage Rise Time (T_A = –40 to +125°C, V_{SS} = EV_{SS} = 0 V)

Parameter	Symbol	Conditions	MIN.	TYP.	MAX.	Unit
Maximum time to rise to 2.7 V (V_{DD} (MIN.)) (V_{DD}: 0 V → 2.7 V)	t_{PUP1}	POCMODE (option byte) = 0, when $\overline{\text{RESET}}$ input is not used			3.6	ms
Maximum time to rise to 2.7 V (V_{DD} (MIN.)) (releasing $\overline{\text{RESET}}$ input → V_{DD}: 2.7 V)	t_{PUP2}	POCMODE (option byte) = 0, when $\overline{\text{RESET}}$ input is used			1.9	ms

Supply Voltage Rise Time Timing

• When $\overline{\text{RESET}}$ pin input is not used

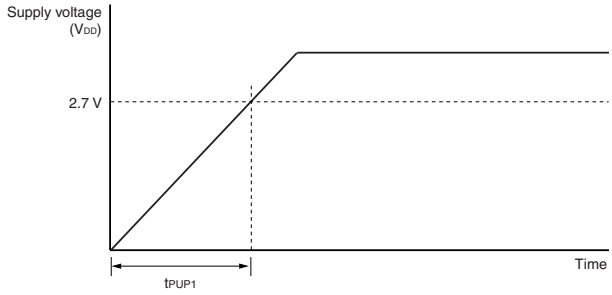

• When $\overline{\text{RESET}}$ pin input is used

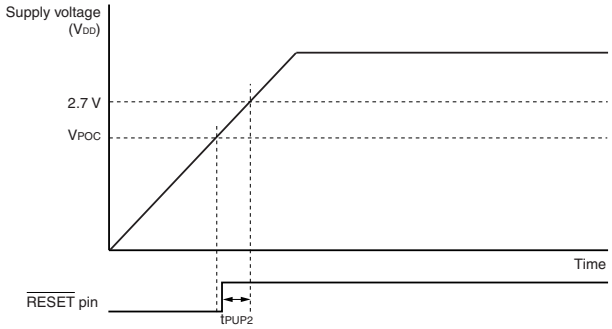

Caution The pins mounted depend on the product. Refer to Caution at the beginning of this chapter.

2.7 V POC Circuit Characteristics (T_A = –40 to +125°C, V_{SS} = EV_{SS} = 0 V)

Parameter	Symbol	Conditions	MIN.	TYP.	MAX.	Unit
Detection voltage on application of supply voltage	V_{DDPOC}	POCMODE (option bye) = 1	2.50	2.70	2.90	V

Remark The operations of the POC circuit are as described below, depending on the POCMODE (option byte) setting.

Option Byte Setting	POC Mode	Operation
POCMODE = 0	1.59 V mode operation	A reset state is retained until V_{POC} = 1.59 V (TYP.) is reached after the power is turned on, and the reset is released when V_{POC} is exceeded. After that, POC detection is performed at V_{POC}, similarly as when the power was turned on. The power supply voltage must be raised at a time of t_{PUP1} or t_{PUP2} when POCMODE is 0.
POCMODE = 1	2.7 V/1.59 V mode operation	A reset state is retained until V_{DDPOC} = 2.7 V (TYP.) is reached after the power is turned on, and the reset is released when V_{DDPOC} is exceeded. After that, POC detection is performed at V_{POC} = 1.59 V (TYP.) and not at V_{DDPOC}. The use of the 2.7 V/1.59 V POC mode is recommended when the rise of the voltage, after the power is turned on and until the voltage reaches 1.8 V, is more relaxed than t_{PTH}.

Caution The pins mounted depend on the product. Refer to Caution at the beginning of this chapter.

LVI Circuit Characteristics (T_A = –40 to +125°C, $V_{POC} \leq V_{DD} = EV_{DD} \leq 5.5$ V, $AV_{REF} \leq V_{DD}$, $V_{SS} = EV_{SS}$ = 0 V)

Parameter		Symbol	Conditions	MIN.	TYP.	MAX.	Unit
Detection voltage	Supply voltage level	V_{LVI0}		4.14	4.24	4.34	V
		V_{LVI1}		3.99	4.09	4.19	V
		V_{LVI2}		3.83	3.93	4.03	V
		V_{LVI3}		3.68	3.78	3.88	V
		V_{LVI4}		3.52	3.62	3.72	V
		V_{LVI5}		3.37	3.47	3.57	V
		V_{LVI6}		3.22	3.32	3.42	V
		V_{LVI7}		3.06	3.16	3.26	V
		V_{LVI8}		2.91	3.01	3.11	V
		V_{LVI9}		2.75	2.85	2.95	V
	External input pin[Note 1]	EXLVI	EXLVI < V_{DD}, 2.7 V ≤ V_{DD} ≤ 5.5 V	1.11	1.21	1.31	V
Minimum pulse width		t_{LW}		200			μs
Operation stabilization wait time[Note 2]		t_{LWAIT}		10			μs

Notes 1. The EXLVI/P120/INTP0 pin is used.

2. Time required from setting bit 7 (LVION) of the low-voltage detection register (LVIM) to 1 to operation stabilization

Remark $V_{LVI(n-1)} > V_{LVIn}$: n = 1 to 9

LVI Circuit Timing

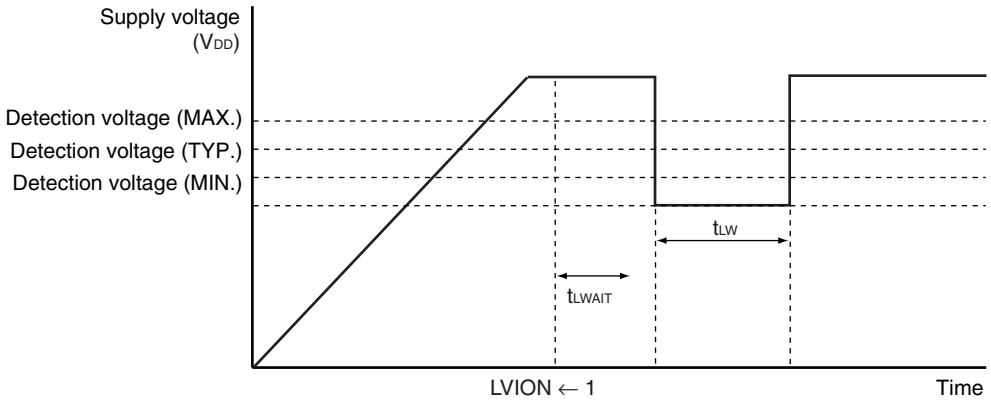

Caution The pins mounted depend on the product. Refer to Caution at the beginning of this chapter.

Data Memory STOP Mode Low Supply Voltage Data Retention Characteristics (T_A = –40 to +125°C)

Parameter	Symbol	Conditions	MIN.	TYP.	MAX.	Unit
Data retention supply voltage	V_{DDDR}		1.44[Note]		5.5	V

Note The value depends on the POC detection voltage. When the voltage drops, the data is retained until a POC reset is effected, but data is not retained when a POC reset is effected.

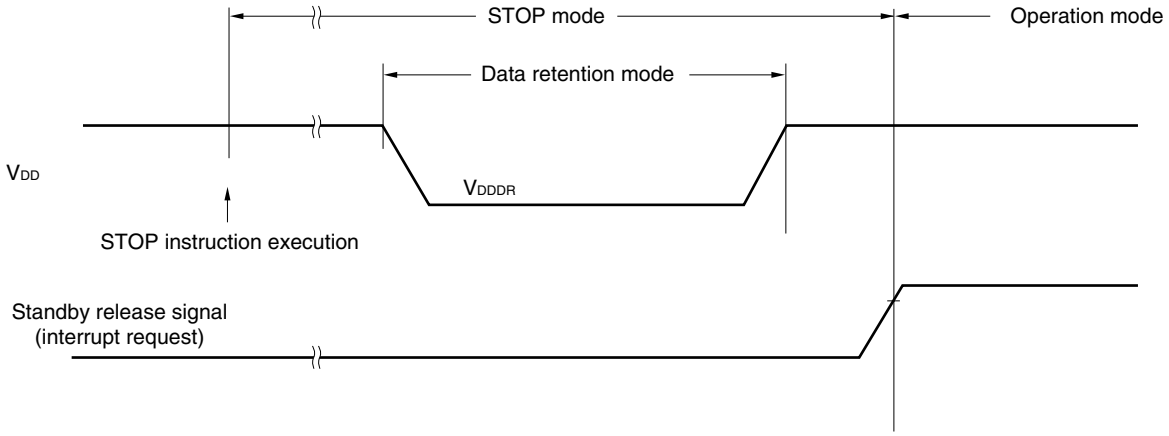

Caution The pins mounted depend on the product. Refer to Caution at the beginning of this chapter.

Flash Memory Programming Characteristics

(T_A = –40 to +125°C, 2.7 V ≤ V_{DD} = EV_{DD} ≤ 5.5 V, AV_{REF} ≤ V_{DD}, V_{SS} = EV_{SS} = AV_{SS} = 0 V)

• Basic characteristics

Parameter		Symbol	Conditions				MIN.	TYP.	MAX.	Unit
V_{DD} supply current		I_{DD}	f_{XP} = 10 MHz (TYP.), 20 MHz (MAX.)					4.5	16.0	mA
Erase time Notes 1, 2	All block	T_{eraca}						20	200	ms
	Block unit	T_{erasa}						20	200	ms
Write time (in 8-bit units) Note 1		T_{wrwa}						10	100	μs
Number of rewrites per chip		C_{erwr}	1 erase + 1 write after erase = 1 rewrite Note 3	Expanded-specification Products (μPD78F05xxA (A2))	• When a flash memory programmer is used, and the libraries Note 4 provided by Renesas Electronics are used • For program update	Retention: 15 years	1000			Times
					• When the EEPROM emulation libraries Note 5 provided by Renesas Electronics are used • The rewritable ROM size: 4 KB • For data update	Retention: 5 years	10000			Times
				Expanded-specification Products (μPD78F05xxA (A2))	Conditions other than the above Note 6	Retention: 10 years	100			Times
				Conventional-specification Products (μPD78F05xx (A2))						

Notes 1. Characteristic of the flash memory. For the characteristic when a dedicated flash programmer, PG-FP4 or PG-FP5, is used and the rewrite time during self programming, see **Tables 27-12** to **27-14**.

2. The prewrite time before erasure and the erase verify time (writeback time) are not included.

3. When a product is first written after shipment, “erase → write” and “write only” are both taken as one rewrite.

4. The sample library specified by the **78K0/Kx2 Flash Memory Self Programming User’s Manual** (Document No.: **U17516E**) is excluded.

5. The sample program specified by the **78K0/Kx2 EEPROM Emulation Application Note** (Document No.: **U17517E**) is excluded.

6. These include when the sample library specified by the **78K0/Kx2 Flash Memory Self Programming User’s Manual** (Document No.: **U17516E**) and the sample program specified by **the 78K0/Kx2 EEPROM Emulation Application Note** (Document No.: **U17517E**) are used.

Remarks 1. f_{XP}: Main system clock oscillation frequency

2. For serial write operation characteristics, refer to **78K0/Kx2 Flash Memory Programming (Programmer) Application Note (**Document No.: **U17739E)**.

CHAPTER 34 PACKAGE DRAWINGS

34.1 78K0/KB2

- μPD78F0500MC-5A4-A, 78F0501MC-5A4-A, 78F0502MC-5A4-A, 78F0503MC-5A4-A, 78F0503DMC-5A4-A

30-PIN PLASTIC SSOP (7.62 mm (300))

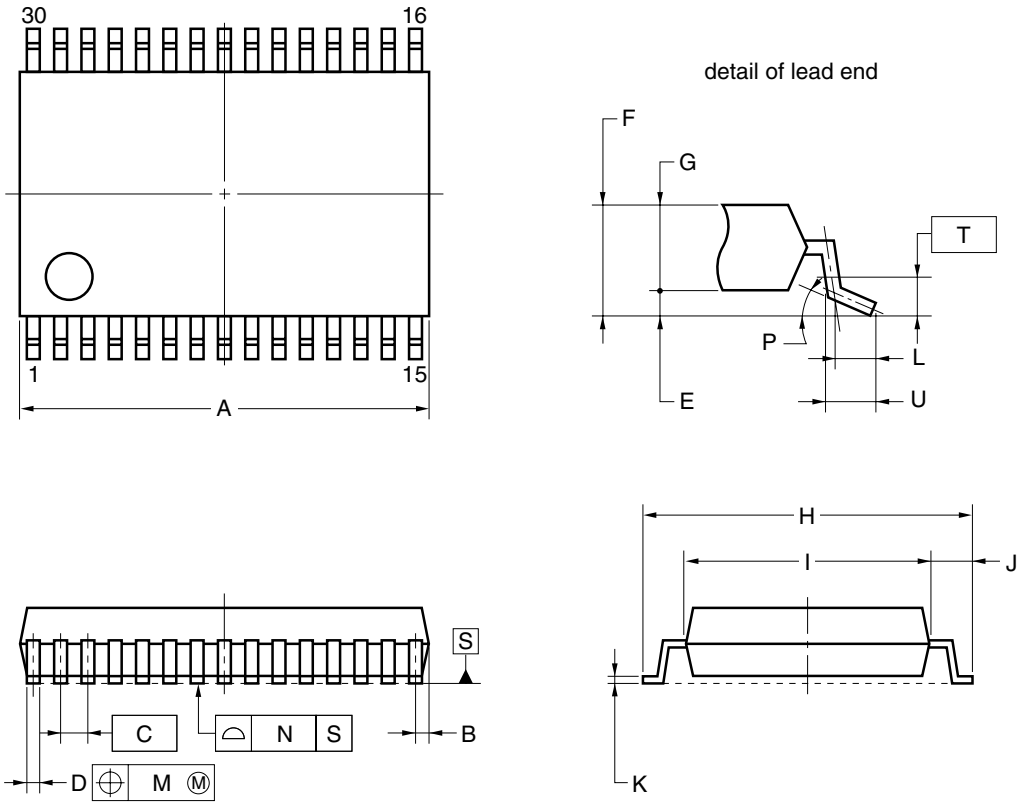

NOTE

Each lead centerline is located within 0.13 mm of its true position (T.P.) at maximum material condition.

ITEM	MILLIMETERS
A	9.85±0.15
B	0.45 MAX.
C	0.65 (T.P.)
D	$0.24^{+0.08}_{-0.07}$
E	0.1±0.05
F	1.3±0.1
G	1.2
H	8.1±0.2
I	6.1±0.2
J	1.0±0.2
K	0.17±0.03
L	0.5
M	0.13
N	0.10
P	$3^{\circ}{}^{+5^{\circ}}_{-3^{\circ}}$
T	0.25
U	0.6±0.15

S30MC-65-5A4-2

- μPD78F0500MC(A)-CAB-AX, 78F0501MC(A)-CAB-AX, 78F0502MC(A)-CAB-AX, 78F0503MC(A)-CAB-AX
- μPD78F0500MC(A2)-CAB-AX, 78F0501MC(A2)-CAB-AX, 78F0502MC(A2)-CAB-AX, 78F0503MC(A2)-CAB-AX
- μPD78F0500AMC-CAB-AX, 78F0501AMC-CAB-AX, 78F0502AMC-CAB-AX, 78F0503AMC-CAB-AX, 78F0503DAMC-CAB-AX
- μPD78F0500AMCA-CAB-G, 78F0501AMCA-CAB-G, 78F0502AMCA-CAB-G, 78F0503AMCA-CAB-G
- μPD78F0500AMCA2-CAB-G, 78F0501AMCA2-CAB-G, 78F0502AMCA2-CAB-G, 78F0503AMCA2-CAB-G

30-PIN PLASTIC SSOP (7.62mm (300))

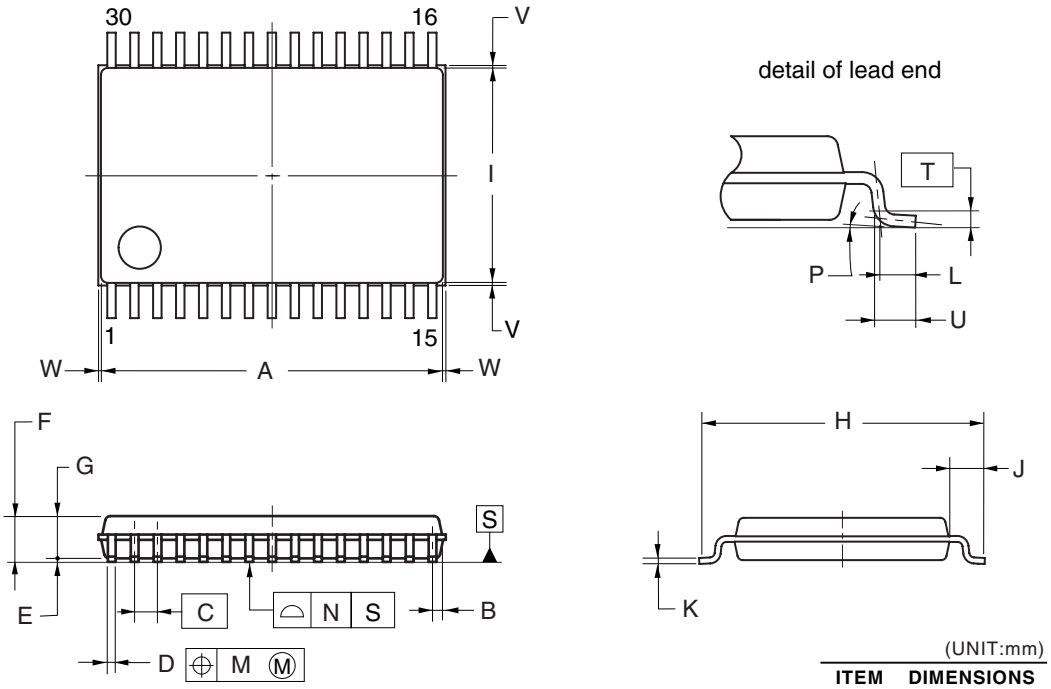

(UNIT:mm)

ITEM	DIMENSIONS
A	9.70±0.10
B	0.30
C	0.65 (T.P.)
D	$0.22^{+0.10}_{-0.05}$
E	0.10±0.05
F	1.30±0.10
G	1.20
H	8.10±0.20
I	6.10±0.10
J	1.00±0.20
K	$0.15^{+0.05}_{-0.01}$
L	0.50
M	0.13
N	0.10
P	$3^{\circ}{}^{+5^{\circ}}_{-3^{\circ}}$
T	0.25(T.P.)
U	0.60±0.15
V	0.25 MAX.
W	0.15 MAX.

P30MC-65-CAB

NOTE

Each lead centerline is located within 0.13 mm of its true position (T.P.) at maximum material condition.

- μPD78F0500FC-AA3-A, 78F0501FC-AA3-A, 78F0502FC-AA3-A, 78F0503FC-AA3-A, 78F0503DFC-AA3-A
- μPD78F0500AFC-AA3-A, 78F0501AFC-AA3-A, 78F0502AFC-AA3-A, 78F0503AFC-AA3-A, 78F0503DAFC-AA3-A

36-PIN PLASTIC FLGA (4x4)

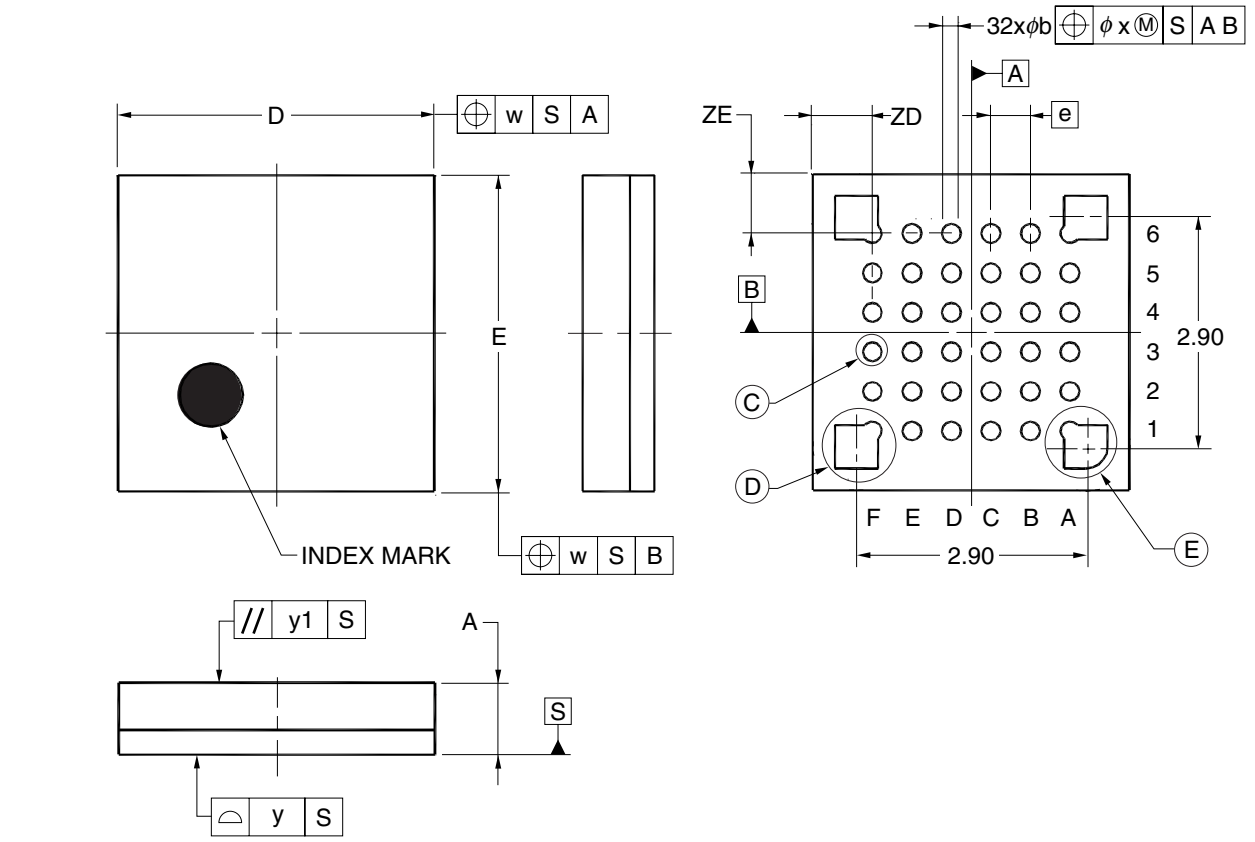

DETAIL OF Ⓒ PART

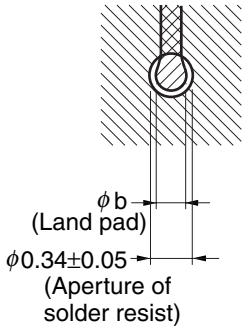

DETAIL OF Ⓓ PART

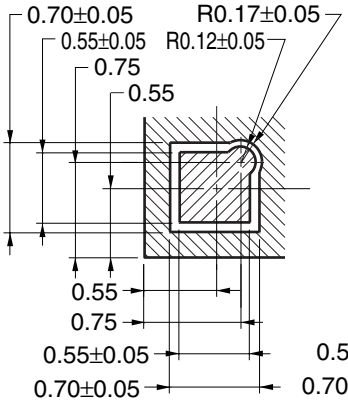

DETAIL OF Ⓔ PART

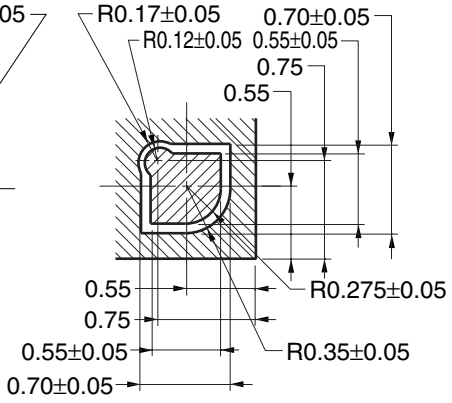

(UNIT:mm)

ITEM	DIMENSIONS
D	4.00±0.10
E	4.00±0.10
w	0.20
e	0.50
A	0.91±0.07
b	0.24±0.05
x	0.05
y	0.08
y1	0.20
ZD	0.75
ZE	0.75

P36FC-50-AA3-2

34.2 78K0/KC2

- μPD78F0511AMC-GAA-AX, 78F0512AMC-GAA-AX, 78F0513AMC-GAA-AX, 78F0513DAMC-GAA-AX
- μPD78F0511AMCA-GAA-G, 78F0512AMCA-GAA-G, 78F0513AMCA-GAA-G
- μPD78F0511AMCA2-GAA-G, 78F0512AMCA2-GAA-G, 78F0513AMCA2-GAA-G

38-PIN PLASTIC SSOP (7.62mm (300))

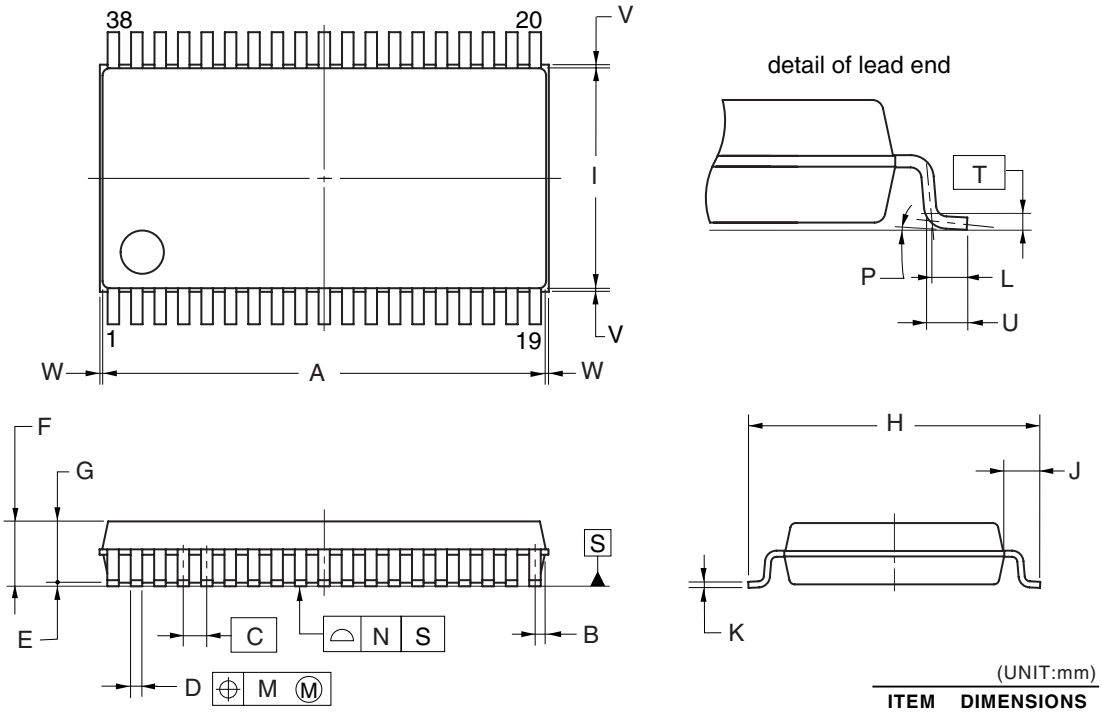

(UNIT:mm)

ITEM	DIMENSIONS
A	12.30±0.10
B	0.30
C	0.65 (T.P.)
D	$0.30^{+0.10}_{-0.05}$
E	0.125±0.075
F	2.00 MAX.
G	1.70±0.10
H	8.10±0.20
I	6.10±0.10
J	1.00±0.20
K	$0.15^{+0.10}_{-0.05}$
L	0.50
M	0.10
N	0.10
P	$3^{\circ}{}^{+5^{\circ}}_{-3^{\circ}}$
T	0.25(T.P.)
U	0.60±0.15
V	0.25 MAX.
W	0.15 MAX.

P38MC-65-GAA

NOTE

Each lead centerline is located within 0.10 mm of its true position (T.P.) at maximum material condition.

• μPD78F0511GB-UES-A, 78F0512GB-UES-A, 78F0513GB-UES-A, 78F0513DGB-UES-A

44-PIN PLASTIC LQFP(10x10)

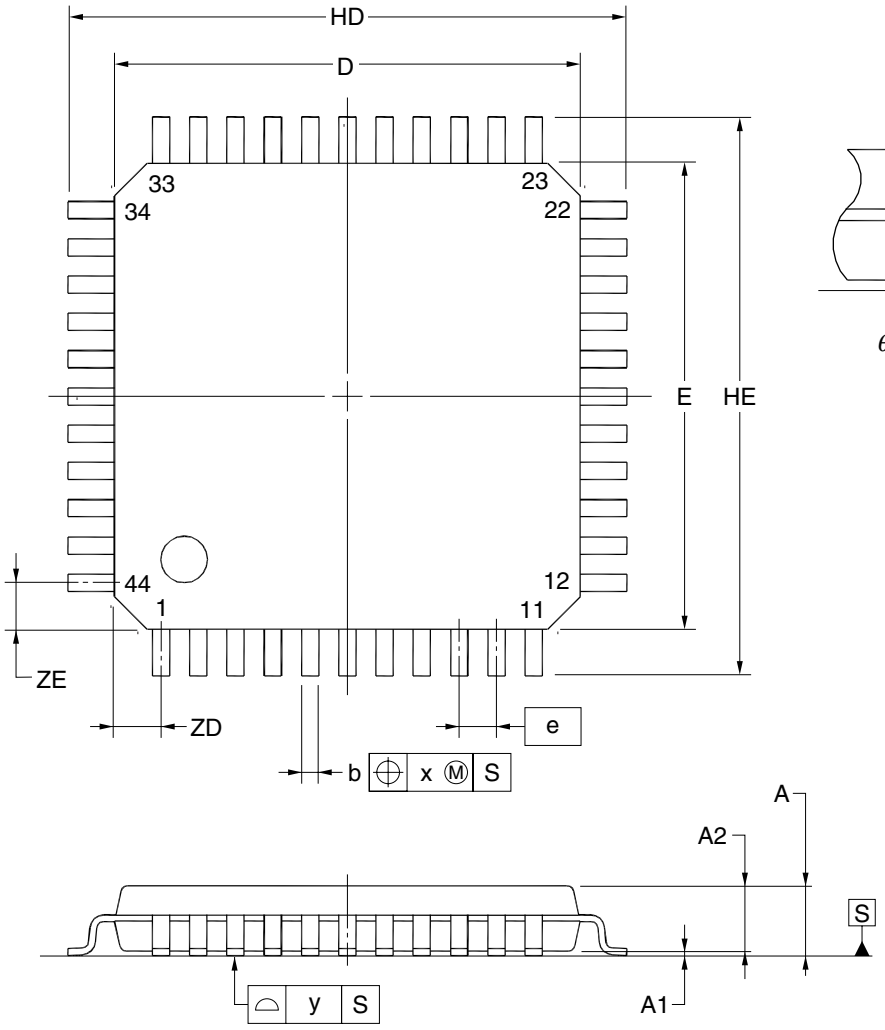

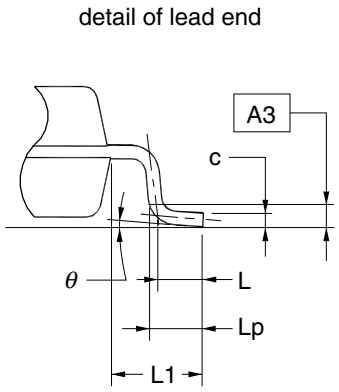

(UNIT:mm)

ITEM	DIMENSIONS
D	10.00±0.20
E	10.00±0.20
HD	12.00±0.20
HE	12.00±0.20
A	1.60 MAX.
A1	0.10±0.05
A2	1.40±0.05
A3	0.25
b	$0.37^{+0.08}_{-0.07}$
c	$0.145^{+0.055}_{-0.045}$
L	0.50
Lp	0.60±0.15
L1	1.00±0.20
θ	$3^{\circ}{}^{+5^{\circ}}_{-3^{\circ}}$
e	0.80
x	0.20
y	0.10
ZD	1.00
ZE	1.00

P44GB-80-UES-1

NOTE
Each lead centerline is located within 0.20 mm of its true position at maximum material condition.

- μPD78F0511GB(A)-GAF-AX, 78F0512GB(A)-GAF-AX, 78F0513GB(A)-GAF-AX
- μPD78F0511GB(A2)-GAF-AX, 78F0512GB(A2)-GAF-AX, 78F0513GB(A2)-GAF-AX
- μPD78F0511AGB-GAF-AX, 78F0512AGB-GAF-AX, 78F0513AGB-GAF-AX, 78F0513DAGB-GAF-AX
- μPD78F0511AGBA-GAF-G, 78F0512AGBA-GAF-G, 78F0513AGBA-GAF-G
- μPD78F0511AGBA2-GAF-G, 78F0512AGBA2-GAF-G, 78F0513AGBA2-GAF-G

44-PIN PLASTIC LQFP (10x10)

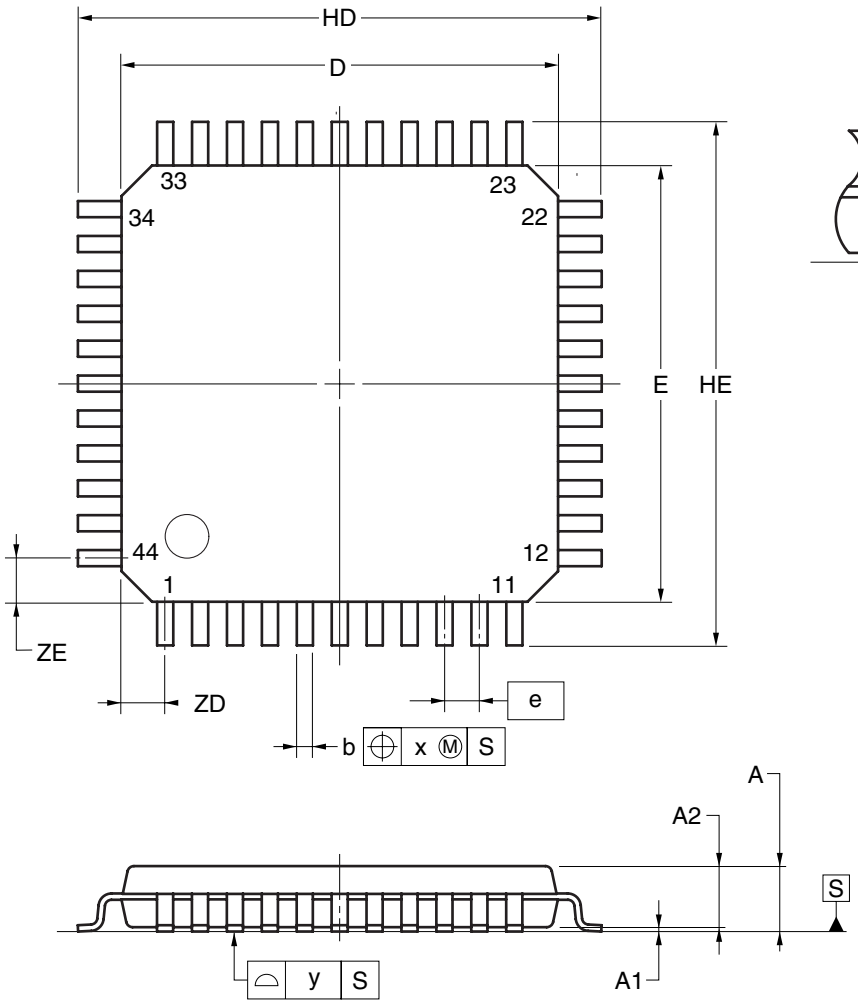

detail of lead end

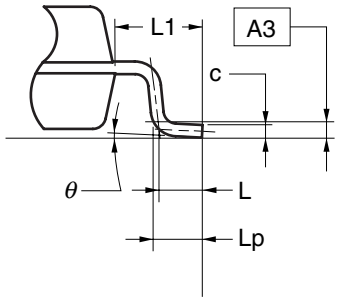

(UNIT:mm)

ITEM	DIMENSIONS
D	10.00±0.20
E	10.00±0.20
HD	12.00±0.20
HE	12.00±0.20
A	1.60 MAX.
A1	0.10±0.05
A2	1.40±0.05
A3	0.25
b	$0.35^{+0.08}_{-0.04}$
c	$0.125^{+0.075}_{-0.025}$
L	0.50
Lp	0.60±0.15
L1	1.00±0.20
θ	$3^{\circ}{}^{+5^{\circ}}_{-3^{\circ}}$
e	0.80
x	0.20
y	0.10
ZD	1.00
ZE	1.00

P44GB-80-GAF

NOTE
Each lead centerline is located within 0.20 mm of its true position at maximum material condition.

- μPD78F0511GA-8EU-A, 78F0512GA-8EU-A, 78F0513GA-8EU-A, 78F0514GA-8EU-A, 78F0515GA-8EU-A, 78F0515DGA-8EU-A

48-PIN PLASTIC LQFP (FINE PITCH)(7x7)

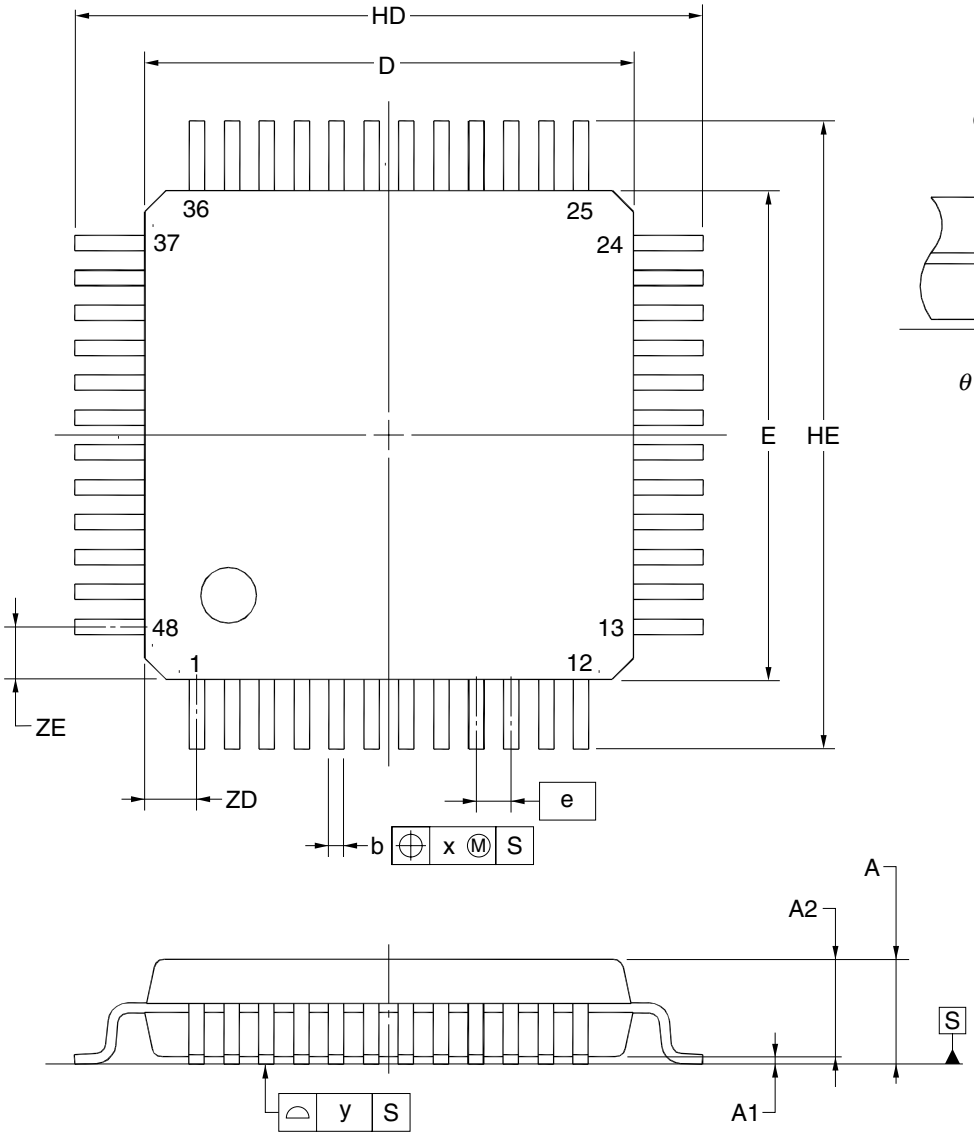

detail of lead end

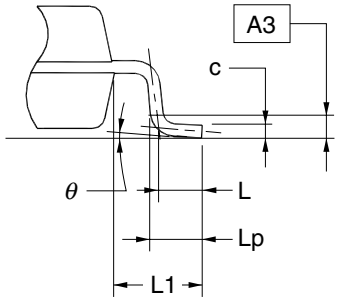

(UNIT:mm)

ITEM	DIMENSIONS
D	7.00±0.20
E	7.00±0.20
HD	9.00±0.20
HE	9.00±0.20
A	1.60 MAX.
A1	0.10±0.05
A2	1.40±0.05
A3	0.25
b	0.22±0.05
c	$0.145^{+0.055}_{-0.045}$
L	0.50
Lp	0.60±0.15
L1	1.00±0.20
θ	$3^{\circ}{}^{+5^{\circ}}_{-3^{\circ}}$
e	0.50
x	0.08
y	0.08
ZD	0.75
ZE	0.75

P48GA-50-8EU

NOTE
Each lead centerline is located within 0.08 mm of its true position at maximum material condition.

- μPD78F0511GA(A)-GAM-AX, 78F0512GA(A)-GAM-AX, 78F0513GA(A)-GAM-AX, 78F0514GA(A)-GAM-AX, 78F0515GA(A)-GAM-AX
- μPD78F0511GA(A2)-GAM-AX, 78F0512GA(A2)-GAM-AX, 78F0513GA(A2)-GAM-AX, 78F0514GA(A2)-GAM-AX, 78F0515GA(A2)-GAM-AX
- μPD78F0511AGA-GAM-AX, 78F0512AGA-GAM-AX, 78F0513AGA-GAM-AX, 78F0514AGA-GAM-AX, 78F0515AGA-GAM-AX, 78F0515DAGA-GAM-AX
- μPD78F0511AGAA-GAM-G, 78F0512AGAA-GAM-G, 78F0513AGAA-GAM-G, 78F0514AGAA-GAM-G, 78F0515AGAA-GAM-G
- μPD78F0511AGAA2-GAM-G, 78F0512AGAA2-GAM-G, 78F0513AGAA2-GAM-G, 78F0514AGAA2-GAM-G, 78F0515AGAA2-GAM-G

48-PIN PLASTIC LQFP (FINE PITCH) (7x7)

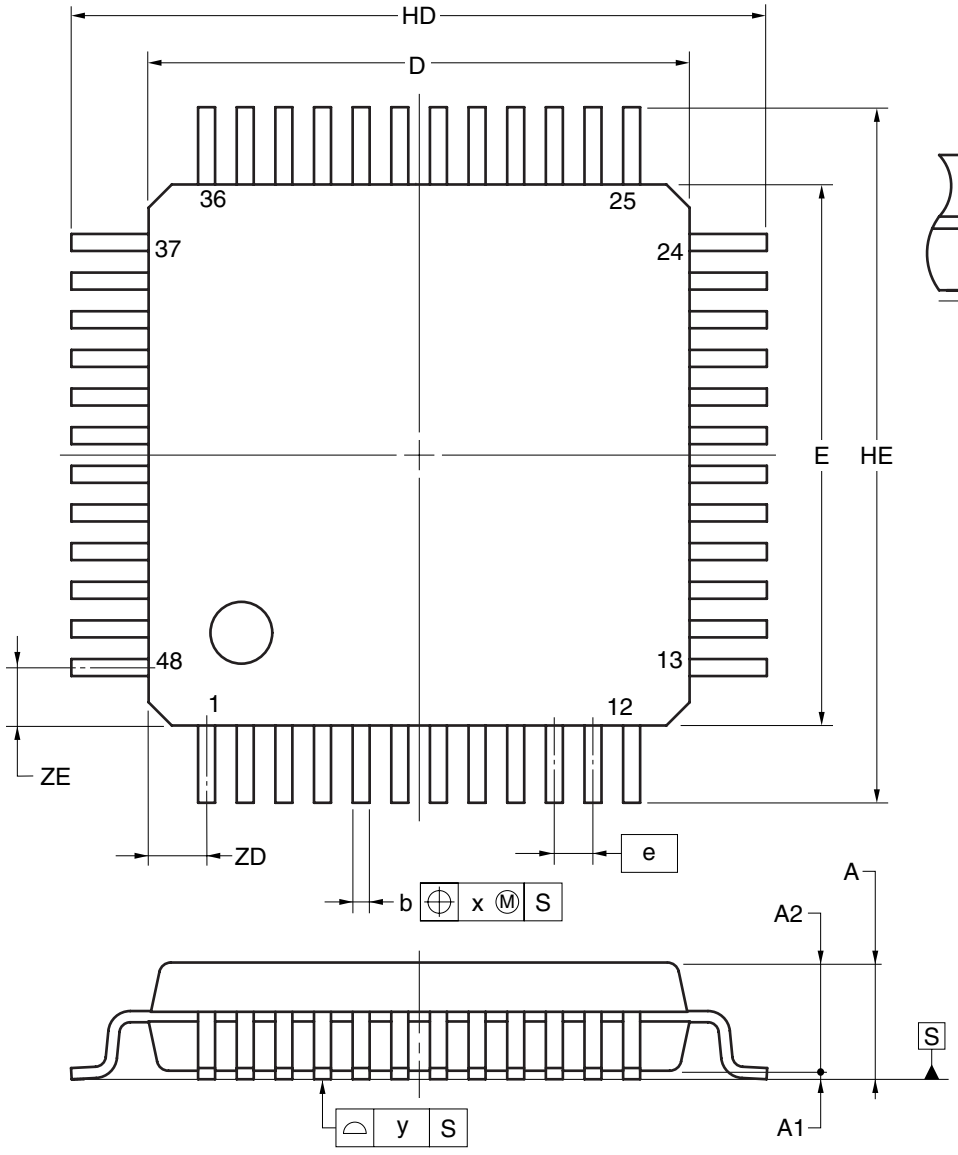

detail of lead end

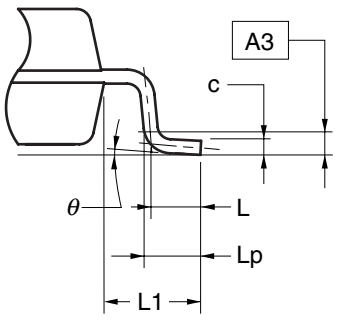

(UNIT:mm)

ITEM	DIMENSIONS
D	7.00±0.20
E	7.00±0.20
HD	9.00±0.20
HE	9.00±0.20
A	1.60 MAX.
A1	0.10±0.05
A2	1.40±0.05
A3	0.25
b	$0.20^{+0.07}_{-0.03}$
c	$0.125^{+0.075}_{-0.025}$
L	0.50
Lp	0.60±0.15
L1	1.00±0.20
θ	$3^{\circ}{}^{+5^{\circ}}_{-3^{\circ}}$
e	0.50
x	0.08
y	0.08
ZD	0.75
ZE	0.75

P48GA-50-GAM

NOTE
Each lead centerline is located within 0.08 mm of its true position at maximum material condition.

34.3 78K0/KD2

- μPD78F0521GB-UET-A, 78F0522GB-UET-A, 78F0523GB-UET-A, 78F0524GB-UET-A, 78F0525GB-UET-A, 78F0526GB-UET-A, 78F0527GB-UET-A, 78F0527DGB-UET-A

52-PIN PLASTIC LQFP(10x10)

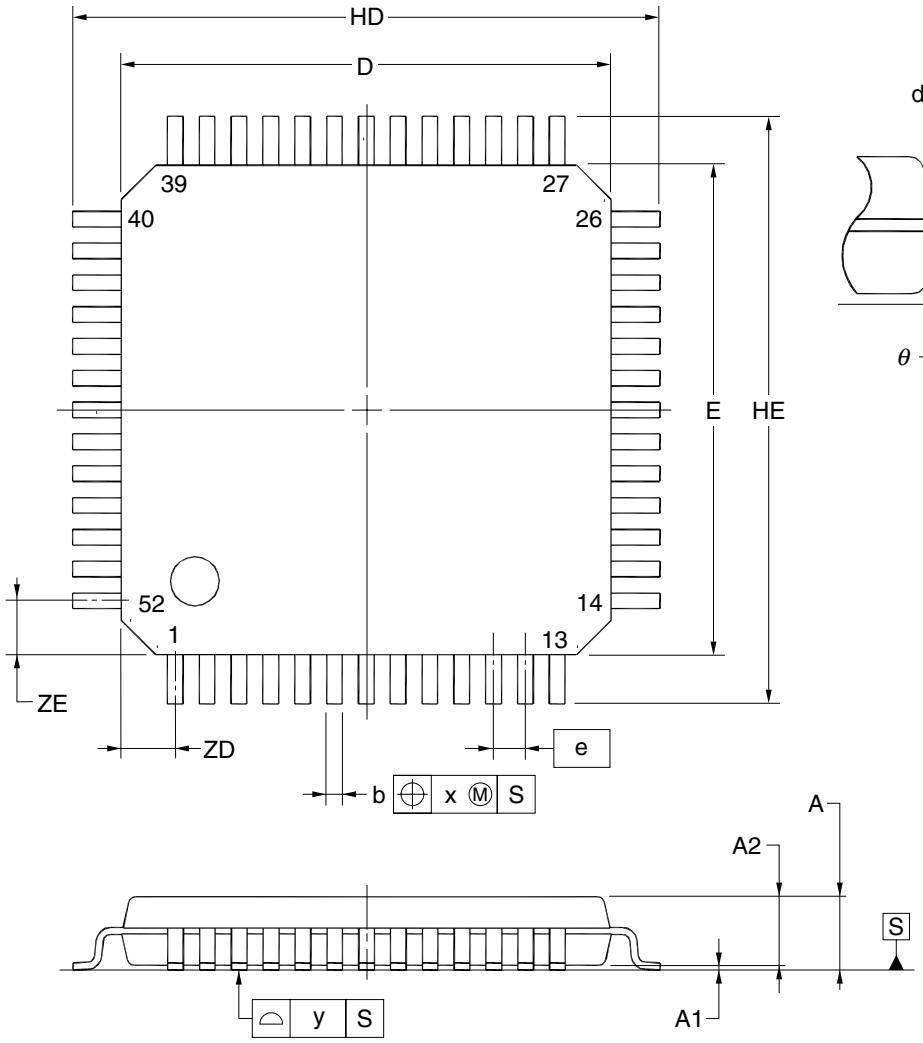

(UNIT:mm)

ITEM	DIMENSIONS
D	10.00±0.20
E	10.00±0.20
HD	12.00±0.20
HE	12.00±0.20
A	1.60 MAX.
A1	0.10±0.05
A2	1.40±0.05
A3	0.25
b	$0.32^{+0.08}_{-0.07}$
c	$0.145^{+0.055}_{-0.045}$
L	0.50
Lp	0.60±0.15
L1	1.00±0.20
θ	$3^{\circ}{}^{+5^{\circ}}_{-3^{\circ}}$
e	0.65
x	0.13
y	0.10
ZD	1.10
ZE	1.10

P52GB-65-UET-1

NOTE
Each lead centerline is located within 0.13 mm of its true position at maximum material condition.

- μPD78F0521GB(A)-GAG-AX, 78F0522GB(A)-GAG-AX, 78F0523GB(A)-GAG-AX, 78F0524GB(A)-GAG-AX, 78F0525GB(A)-GAG-AX, 78F0526GB(A)-GAG-AX, 78F0527GB(A)-GAG-AX
- μPD78F0521GB(A2)-GAG-AX, 78F0522GB(A2)-GAG-AX, 78F0523GB(A2)-GAG-AX, 78F0524GB(A2)-GAG-AX, 78F0525GB(A2)-GAG-AX, 78F0526GB(A2)-GAG-AX, 78F0527GB(A2)-GAG-AX
- μPD78F0521AGB-GAG-AX, 78F0522AGB-GAG-AX, 78F0523AGB-GAG-AX, 78F0524AGB-GAG-AX, 78F0525AGB-GAG-AX, 78F0526AGB-GAG-AX, 78F0527AGB-GAG-AX, 78F0527DAGB-GAG-AX
- μPD78F0521AGBA-GAG-G, 78F0522AGBA-GAG-G, 78F0523AGBA-GAG-G, 78F0524AGBA-GAG-G, 78F0525AGBA-GAG-G, 78F0526AGBA-GAG-G, 78F0527AGBA-GAG-G
- μPD78F0521AGBA2-GAG-G, 78F0522AGBA2-GAG-G, 78F0523AGBA2-GAG-G, 78F0524AGBA2-GAG-G, 78F0525AGBA2-GAG-G, 78F0526AGBA2-GAG-G, 78F0527AGBA2-GAG-G

52-PIN PLASTIC LQFP (10x10)

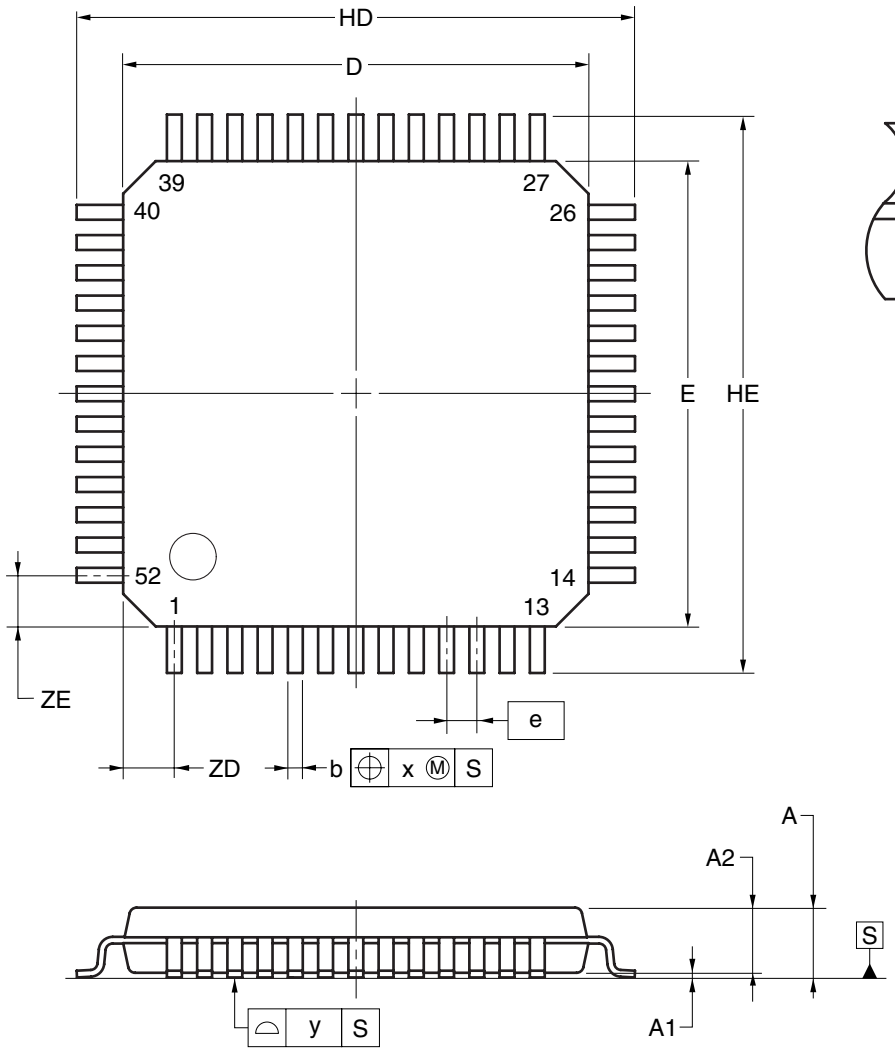

detail of lead end

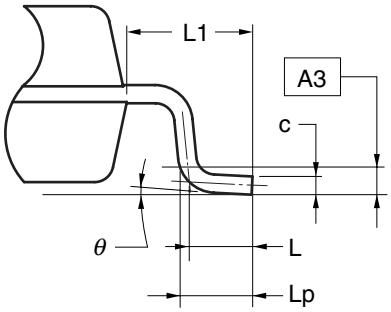

(UNIT:mm)

ITEM	DIMENSIONS
D	10.00±0.20
E	10.00±0.20
HD	12.00±0.20
HE	12.00±0.20
A	1.60 MAX.
A1	0.10±0.05
A2	1.40±0.05
A3	0.25
b	$0.30^{+0.08}_{-0.04}$
c	$0.125^{+0.075}_{-0.025}$
L	0.50
Lp	0.60±0.15
L1	1.00±0.20
θ	$3^{\circ}{}^{+5^{\circ}}_{-3^{\circ}}$
e	0.65
x	0.13
y	0.10
ZD	1.10
ZE	1.10

P52GB-65-GAG

NOTE
Each lead centerline is located within 0.13mm of its true position at maximum material condition.

34.4 78K0/KE2

- μPD78F0531GB-UEU-A, 78F0532GB-UEU-A, 78F0533GB-UEU-A, 78F0534GB-UEU-A, 78F0535GB-UEU-A, 78F0536GB-UEU-A, 78F0537GB-UEU-A, 78F0537DGB-UEU-A

64-PIN PLASTIC LQFP(FINE PITCH)(10x10)

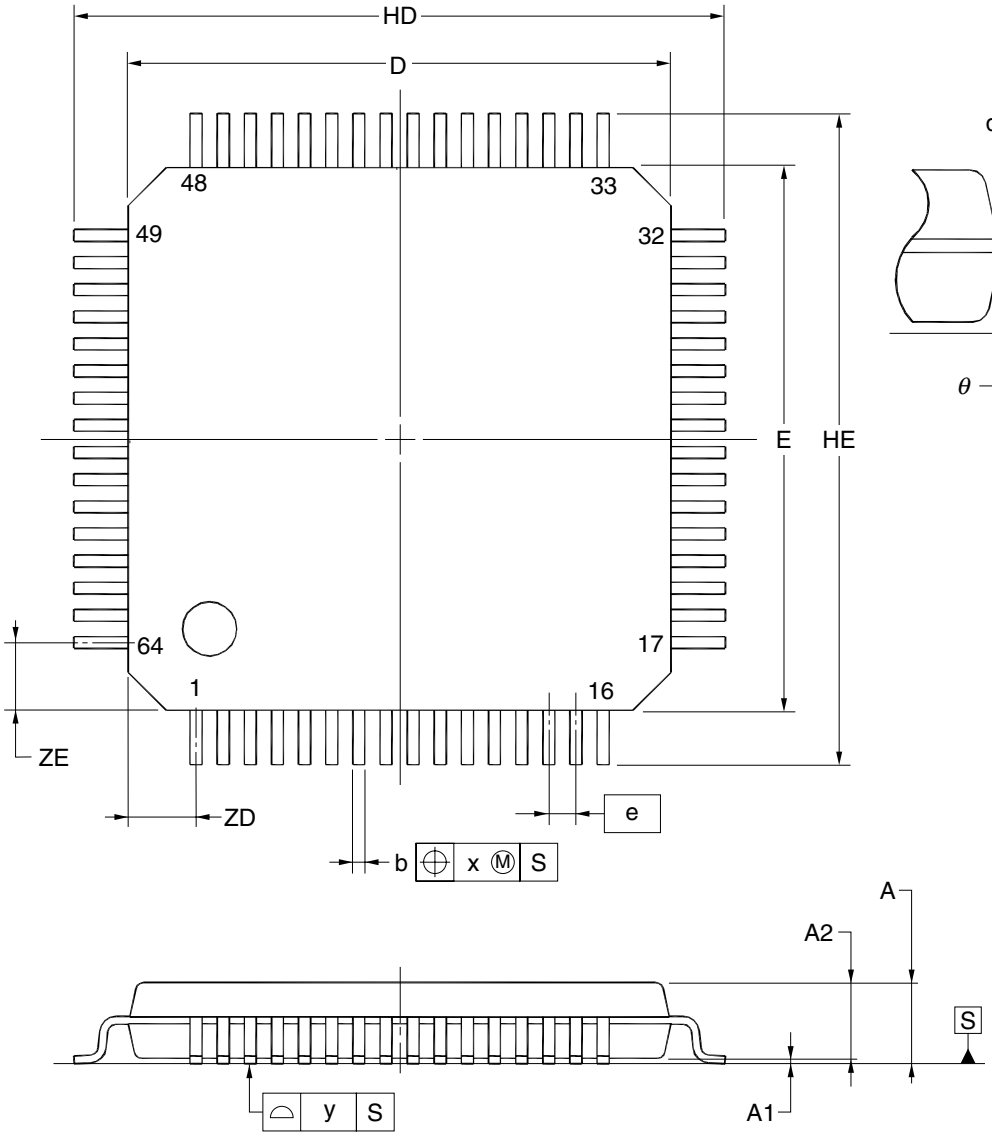

(UNIT:mm)

ITEM	DIMENSIONS
D	10.00±0.20
E	10.00±0.20
HD	12.00±0.20
HE	12.00±0.20
A	1.60 MAX.
A1	0.10±0.05
A2	1.40±0.05
A3	0.25
b	0.22±0.05
c	$0.145^{+0.55}_{-0.45}$
L	0.50
Lp	0.60±0.15
L1	1.00±0.20
θ	$3^{\circ}{}^{+5^{\circ}}_{-3^{\circ}}$
e	0.50
x	0.08
y	0.08
ZD	1.25
ZE	1.25

P64GB-50-UEU

NOTE
Each lead centerline is located within 0.08 mm of its true position at maximum material condition.

- μPD78F0531GB(A)-GAH-AX, 78F0532GB(A)-GAH-AX, 78F0533GB(A)-GAH-AX, 78F0534GB(A)-GAH-AX, 78F0535GB(A)-GAH-AX, 78F0536GB(A)-GAH-AX, 78F0537GB(A)-GAH-AX
- μPD78F0531GB(A2)-GAH-AX, 78F0532GB(A2)-GAH-AX, 78F0533GB(A2)-GAH-AX, 78F0534GB(A2)-GAH-AX, 78F0535GB(A2)-GAH-AX, 78F0536GB(A2)-GAH-AX, 78F0537GB(A2)-GAH-AX
- μPD78F0531AGB-GAH-AX, 78F0532AGB-GAH-AX, 78F0533AGB-GAH-AX, 78F0534AGB-GAH-AX, 78F0535AGB-GAH-AX, 78F0536AGB-GAH-AX, 78F0537AGB-GAH-AX, 78F0537DAGB-GAH-AX
- μPD78F0531AGBA-GAH-G, 78F0532AGBA-GAH-G, 78F0533AGBA-GAH-G, 78F0534AGBA-GAH-G, 78F0535AGBA-GAH-G, 78F0536AGBA-GAH-G, 78F0537AGBA-GAH-G
- μPD78F0531AGBA2-GAH-G, 78F0532AGBA2-GAH-G, 78F0533AGBA2-GAH-G, 78F0534AGBA2-GAH-G, 78F0535AGBA2-GAH-G, 78F0536AGBA2-GAH-G, 78F0537AGBA2-GAH-G

64-PIN PLASTIC LQFP(FINE PITCH)(10x10)

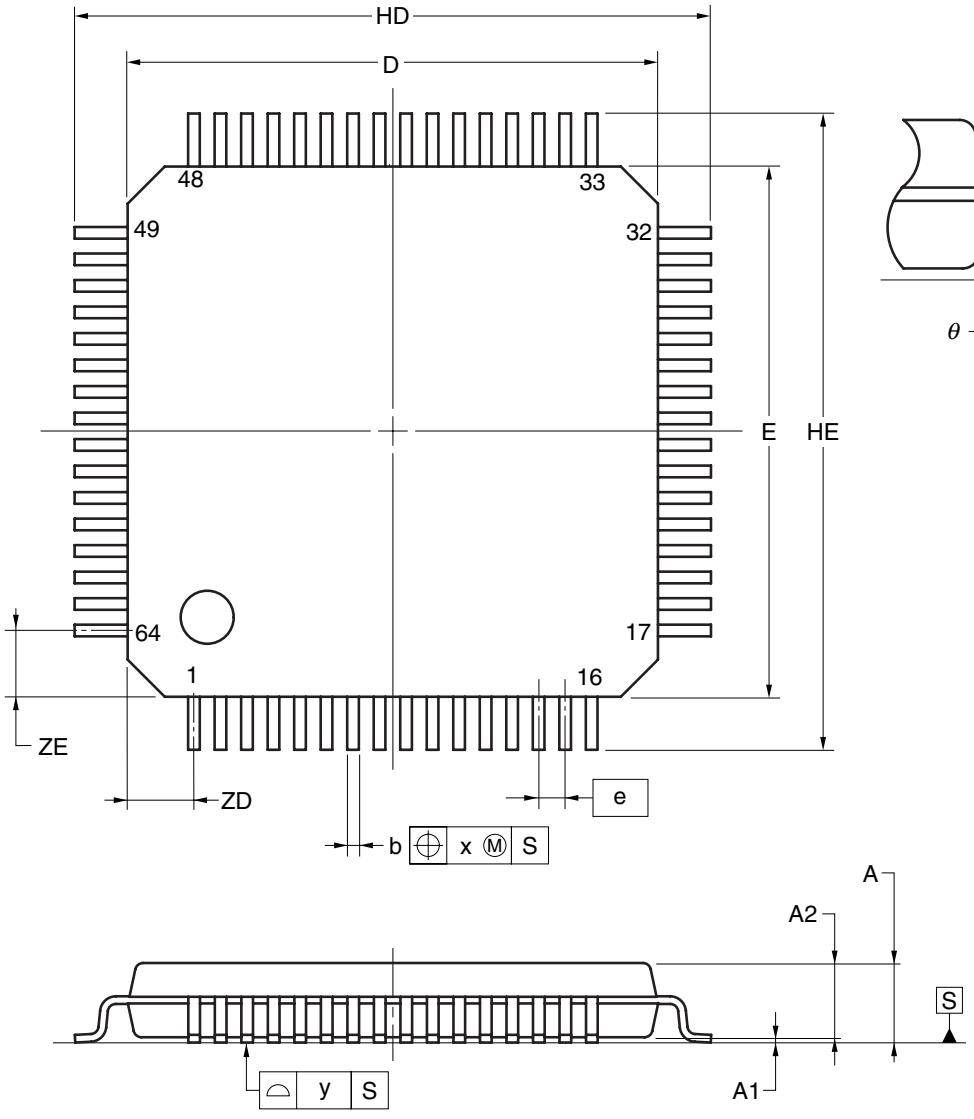

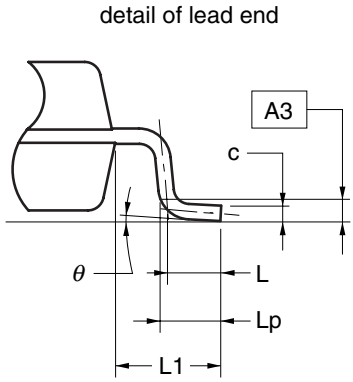

(UNIT:mm)

ITEM	DIMENSIONS
D	10.00±0.20
E	10.00±0.20
HD	12.00±0.20
HE	12.00±0.20
A	1.60 MAX.
A1	0.10±0.05
A2	1.40±0.05
A3	0.25
b	$0.20^{+0.07}_{-0.03}$
c	$0.125^{+0.075}_{-0.025}$
L	0.50
Lp	0.60±0.15
L1	1.00±0.20
θ	$3^{\circ}{}^{+5^{\circ}}_{-3^{\circ}}$
e	0.50
x	0.08
y	0.08
ZD	1.25
ZE	1.25

P64GB-50-GAH

NOTE
Each lead centerline is located within 0.08 mm of its true position at maximum material condition.

- μPD78F0531GC-UBS-A, 78F0532GC-UBS-A, 78F0533GC-UBS-A, 78F0534GC-UBS-A, 78F0535GC-UBS-A, 78F0536GC-UBS-A, 78F0537GC-UBS-A, 78F0537DGC-UBS-A

64-PIN PLASTIC LQFP(14x14)

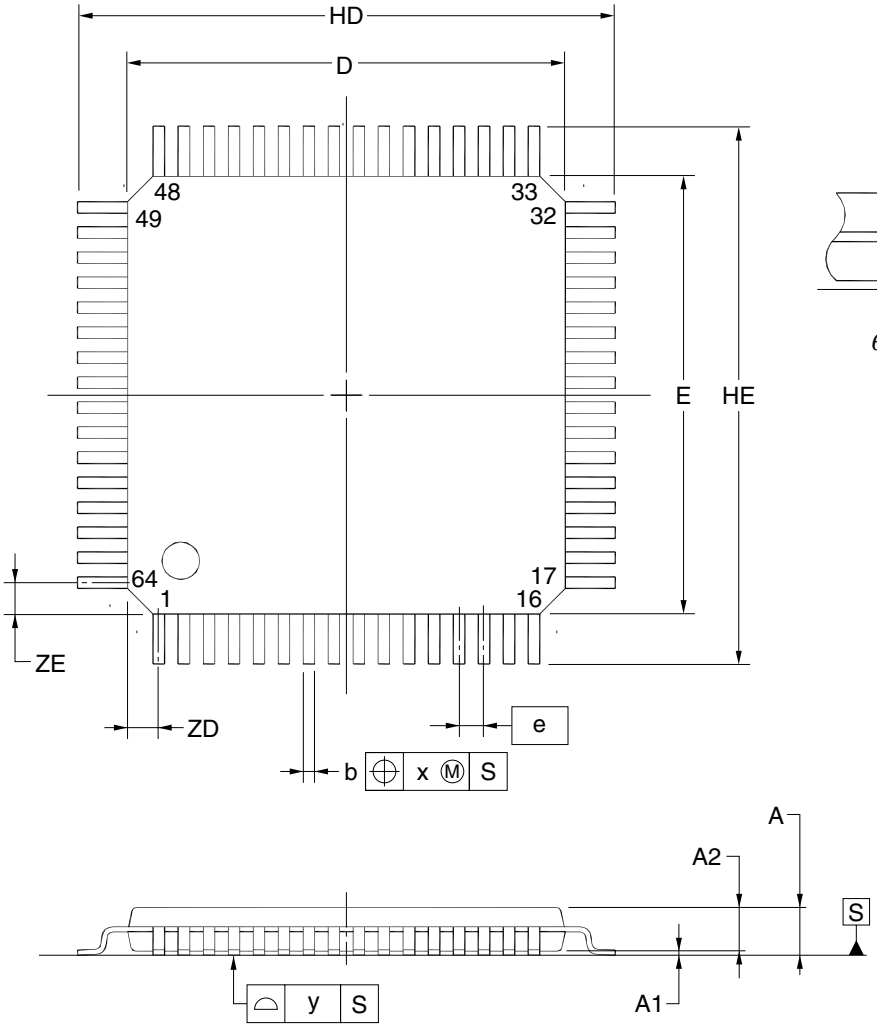

detail of lead end

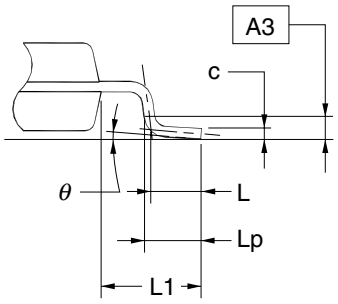

(UNIT:mm)

ITEM	DIMENSIONS
D	14.00±0.20
E	14.00±0.20
HD	17.20±0.20
HE	17.20±0.20
A	1.70 MAX.
A1	0.125±0.075
A2	1.40±0.05
A3	0.25
b	$0.37^{+0.08}_{-0.07}$
c	$0.17^{+0.03}_{-0.06}$
L	0.80
Lp	0.886±0.15
L1	1.60±0.20
θ	$3^{\circ}{}^{+5^{\circ}}_{-3^{\circ}}$
e	0.80
x	0.20
y	0.10
ZD	1.00
ZE	1.00

P64GC-80-UBS

NOTE
Each lead centerline is located within 0.20 mm of its true position at maximum material condition.

- μPD78F0531GC(A)-GAL-AX, 78F0532GC(A)-GAL-AX, 78F0533GC(A)-GAL-AX, 78F0534GC(A)-GAL-AX, 78F0535GC(A)-GAL-AX, 78F0536GC(A)-GAL-AX, 78F0537GC(A)-GAL-AX
- μPD78F0531GC(A2)-GAL-AX, 78F0532GC(A2)-GAL-AX, 78F0533GC(A2)-GAL-AX, 78F0534GC(A2)-GAL-AX, 78F0535GC(A2)-GAL-AX, 78F0536GC(A2)-GAL-AX, 78F0537GC(A2)-GAL-AX
- μPD78F0531AGC-GAL-AX, 78F0532AGC-GAL-AX, 78F0533AGC-GAL-AX, 78F0534AGC-GAL-AX, 78F0535AGC-GAL-AX, 78F0536AGC-GAL-AX, 78F0537AGC-GAL-AX, 78F0537DAGC-GAL-AX
- μPD78F0531AGCA-GAL-G, 78F0532AGCA-GAL-G, 78F0533AGCA-GAL-G, 78F0534AGCA-GAL-G, 78F0535AGCA-GAL-G, 78F0536AGCA-GAL-G, 78F0537AGCA-GAL-G
- μPD78F0531AGCA2-GAL-G, 78F0532AGCA2-GAL-G, 78F0533AGCA2-GAL-G, 78F0534AGCA2-GAL-G, 78F0535AGCA2-GAL-G, 78F0536AGCA2-GAL-G, 78F0537AGCA2-GAL-G

64-PIN PLASTIC LQFP (14x14)

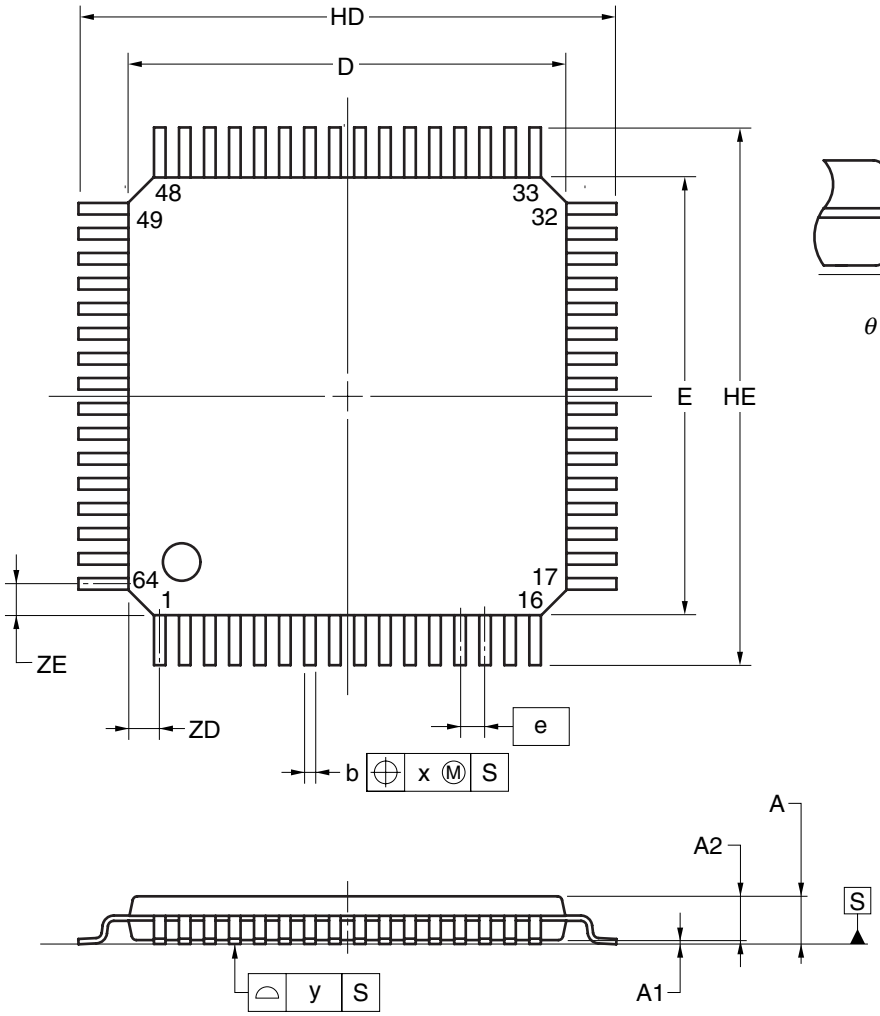

detail of lead end

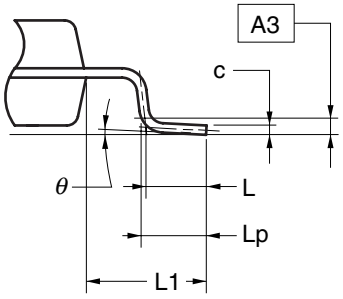

(UNIT:mm)

ITEM	DIMENSIONS
D	14.00±0.20
E	14.00±0.20
HD	17.20±0.20
HE	17.20±0.20
A	1.70 MAX.
A1	0.125±0.075
A2	1.40±0.05
A3	0.25
b	$0.35^{+0.08}_{-0.04}$
c	$0.125^{+0.075}_{-0.025}$
L	0.80
Lp	0.886±0.15
L1	1.60±0.20
θ	$3^{\circ}{}^{+5^{\circ}}_{-3^{\circ}}$
e	0.80
x	0.20
y	0.10
ZD	1.00
ZE	1.00

P64GC-80-GAL

NOTE
Each lead centerline is located within 0.20 mm of its true position at maximum material condition.

- μPD78F0531GK-UET-A, 78F0532GK-UET-A, 78F0533GK-UET-A, 78F0534GK-UET-A, 78F0535GK-UET-A, 78F0536GK-UET-A, 78F0537GK-UET-A, 78F0537DGK-UET-A

64-PIN PLASTIC LQFP(12x12)

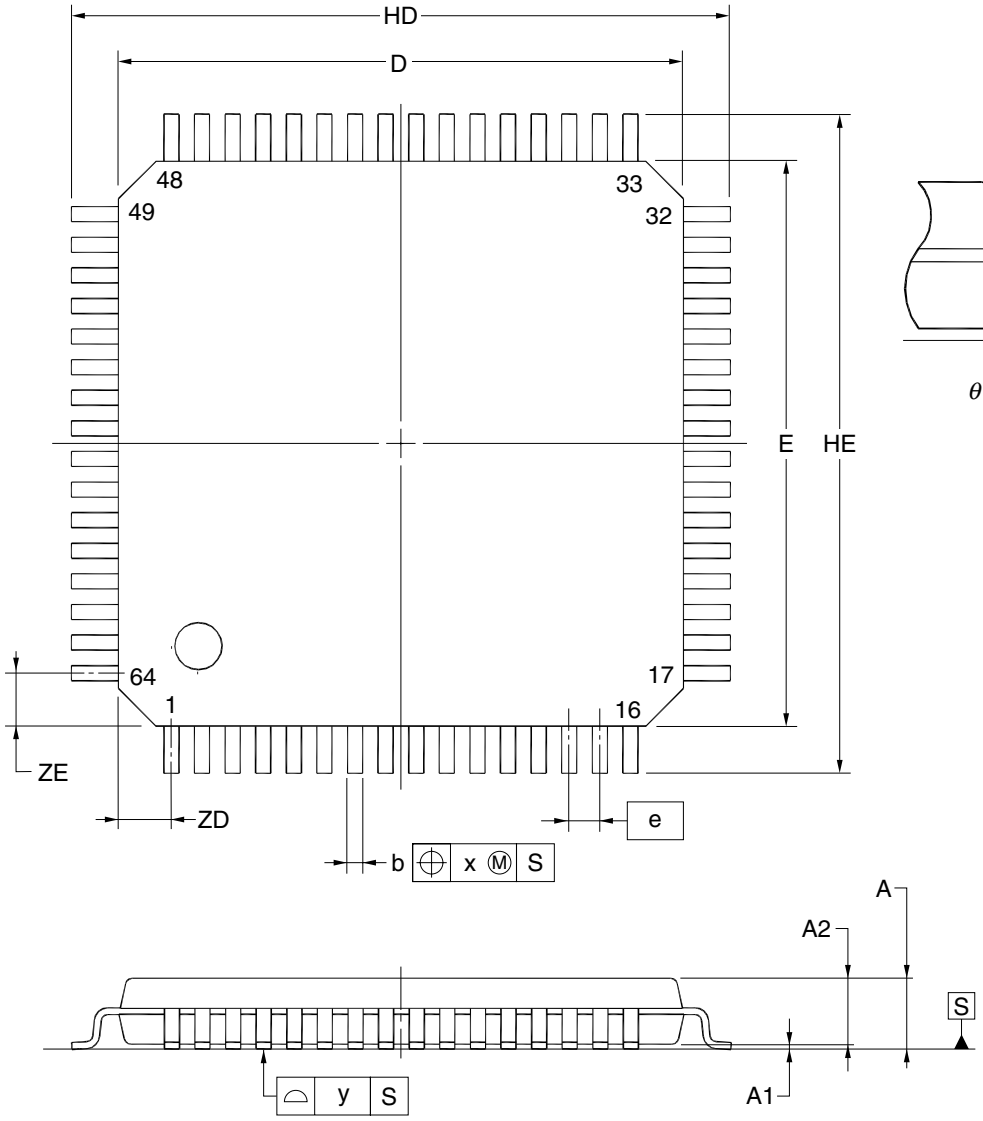

detail of lead end

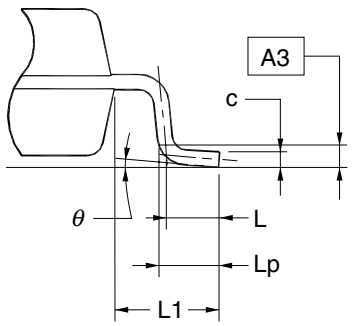

(UNIT:mm)

ITEM	DIMENSIONS
D	12.00±0.20
E	12.00±0.20
HD	14.00±0.20
HE	14.00±0.20
A	1.60 MAX.
A1	0.10±0.05
A2	1.40±0.05
A3	0.25
b	$0.32^{+0.08}_{-0.07}$
c	$0.145^{+0.055}_{-0.045}$
L	0.50
Lp	0.60±0.15
L1	1.00±0.20
θ	$3^{\circ}{}^{+5^{\circ}}_{-3^{\circ}}$
e	0.65
x	0.13
y	0.10
ZD	1.125
ZE	1.125

P64GK-65-UET-1

NOTE
Each lead centerline is located within 0.13 mm of its true position at maximum material condition.

- μPD78F0531GK(A)-GAJ-AX, 78F0532GK(A)-GAJ-AX, 78F0533GK(A)-GAJ-AX, 78F0534GK(A)-GAJ-AX, 78F0535GK(A)-GAJ-AX, 78F0536GK(A)-GAJ-AX, 78F0537GK(A)-GAJ-AX
- μPD78F0531GK(A2)-GAJ-AX, 78F0532GK(A2)-GAJ-AX, 78F0533GK(A2)-GAJ-AX, 78F0534GK(A2)-GAJ-AX, 78F0535GK(A2)-GAJ-AX, 78F0536GK(A2)-GAJ-AX, 78F0537GK(A2)-GAJ-AX
- μPD78F0531AGK-GAJ-AX, 78F0532AGK-GAJ-AX, 78F0533AGK-GAJ-AX, 78F0534AGK-GAJ-AX, 78F0535AGK-GAJ-AX, 78F0536AGK-GAJ-AX, 78F0537AGK-GAJ-AX, 78F0537DAGK-GAJ-AX
- μPD78F0531AGKA-GAJ-G, 78F0532AGKA-GAJ-G, 78F0533AGKA-GAJ-G, 78F0534AGKA-GAJ-G, 78F0535AGKA-GAJ-G, 78F0536AGKA-GAJ-G, 78F0537AGKA-GAJ-G
- μPD78F0531AGKA2-GAJ-G, 78F0532AGKA2-GAJ-G, 78F0533AGKA2-GAJ-G, 78F0534AGKA2-GAJ-G, 78F0535AGKA2-GAJ-G, 78F0536AGKA2-GAJ-G, 78F0537AGKA2-GAJ-G

64-PIN PLASTIC LQFP (12x12)

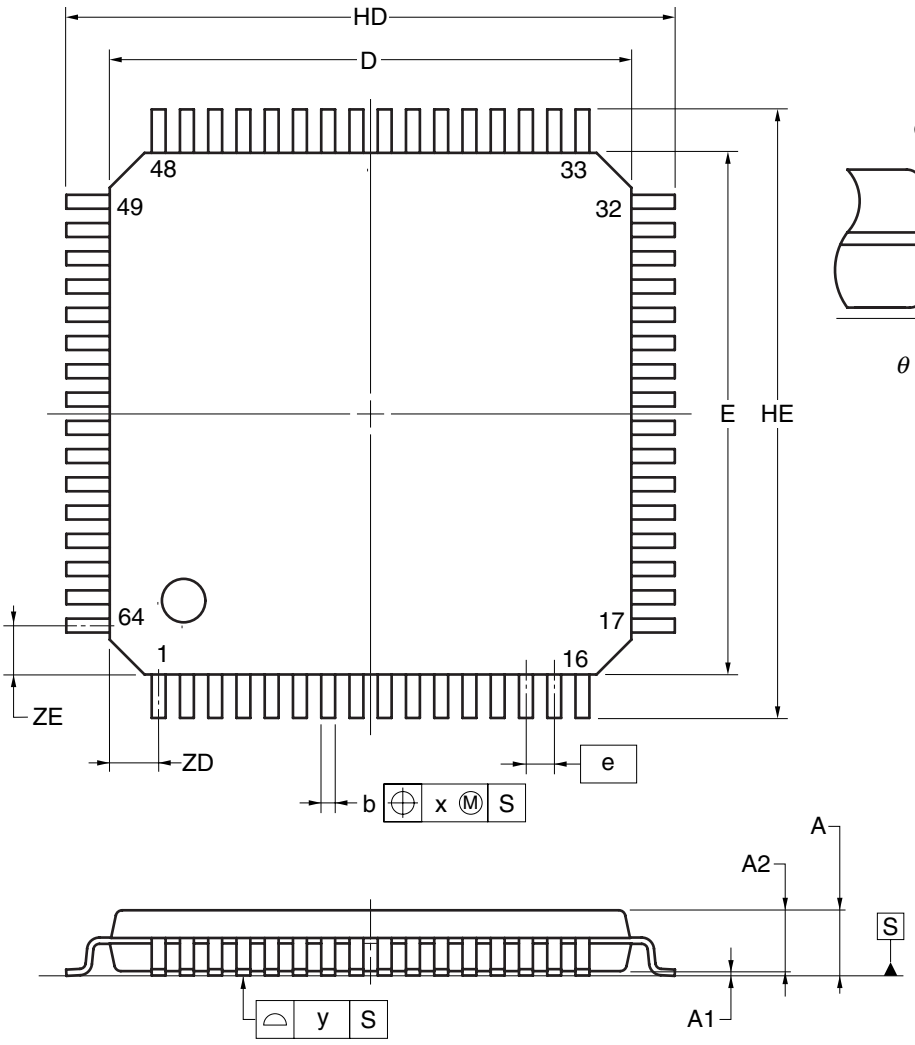

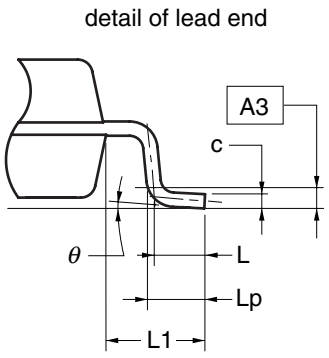

(UNIT:mm)

ITEM	DIMENSIONS
D	12.00±0.20
E	12.00±0.20
HD	14.00±0.20
HE	14.00±0.20
A	1.60 MAX.
A1	0.10±0.05
A2	1.40±0.05
A3	0.25
b	$0.30^{+0.08}_{-0.04}$
c	$0.125^{+0.75}_{-0.25}$
L	0.50
Lp	0.60±0.15
L1	1.00±0.20
θ	$3^{\circ}{}^{+5^{\circ}}_{-3^{\circ}}$
e	0.65
x	0.13
y	0.10
ZD	1.125
ZE	1.125

P64GK-65-GAJ

NOTE
Each lead centerline is located within 0.13 mm of its true position at maximum material condition.

- μPD78F0531GA-9EV-A, 78F0532GA-9EV-A, 78F0533GA-9EV-A, 78F0534GA-9EV-A, 78F0535GA-9EV-A, 78F0536GA-9EV-A, 78F0537GA-9EV-A, 78F0537DGA-9EV-A

64-PIN PLASTIC TQFP (FINE PITCH) (7x7)

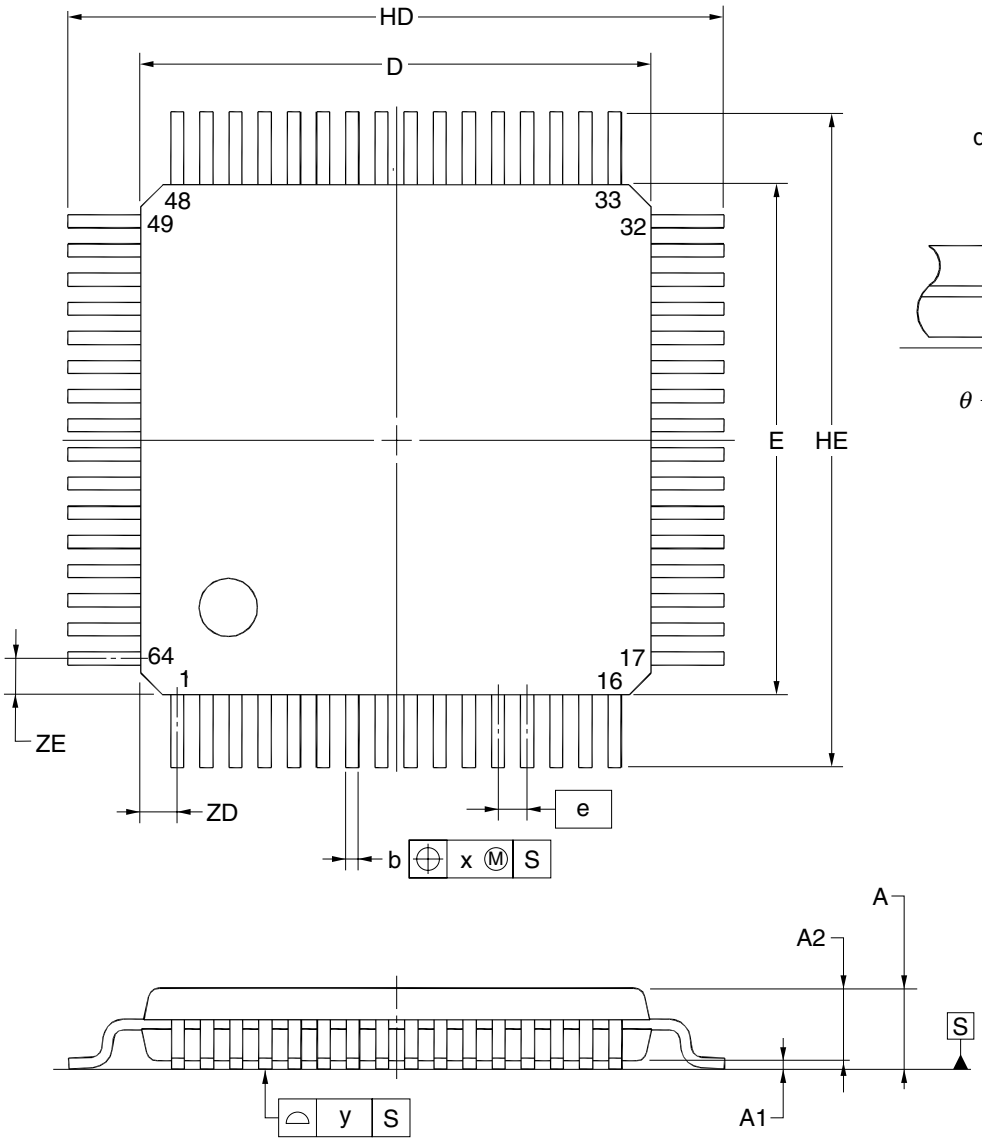

detail of lead end

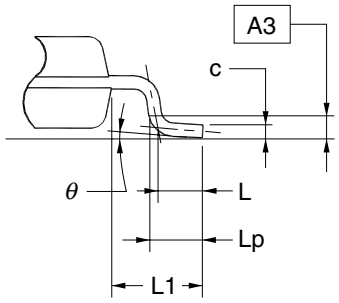

(UNIT:mm)

ITEM	DIMENSIONS
D	7.00±0.20
E	7.00±0.20
HD	9.00±0.20
HE	9.00±0.20
A	1.20 MAX.
A1	0.10±0.05
A2	1.00±0.05
A3	0.25
b	0.18±0.05
c	$0.145^{+0.055}_{-0.045}$
L	0.50
Lp	0.60±0.15
L1	1.00±0.20
θ	$3^{\circ}{}^{+5^{\circ}}_{-3^{\circ}}$
e	0.40
x	0.07
y	0.08
ZD	0.50
ZE	0.50

P64GA-40-9EV-1

NOTE
Each lead centerline is located within 0.07 mm of its true position at maximum material condition.

- μPD78F0531AGA-HAB-AX, 78F0532AGA-HAB-AX, 78F0533AGA-HAB-AX, 78F0534AGA-HAB-AX, 78F0535AGA-HAB-AX, 78F0536AGA-HAB-AX, 78F0537AGA-HAB-AX, 78F0537DAGA-HAB-AX

64-PIN PLASTIC TQFP (FINE PITCH) (7x7)

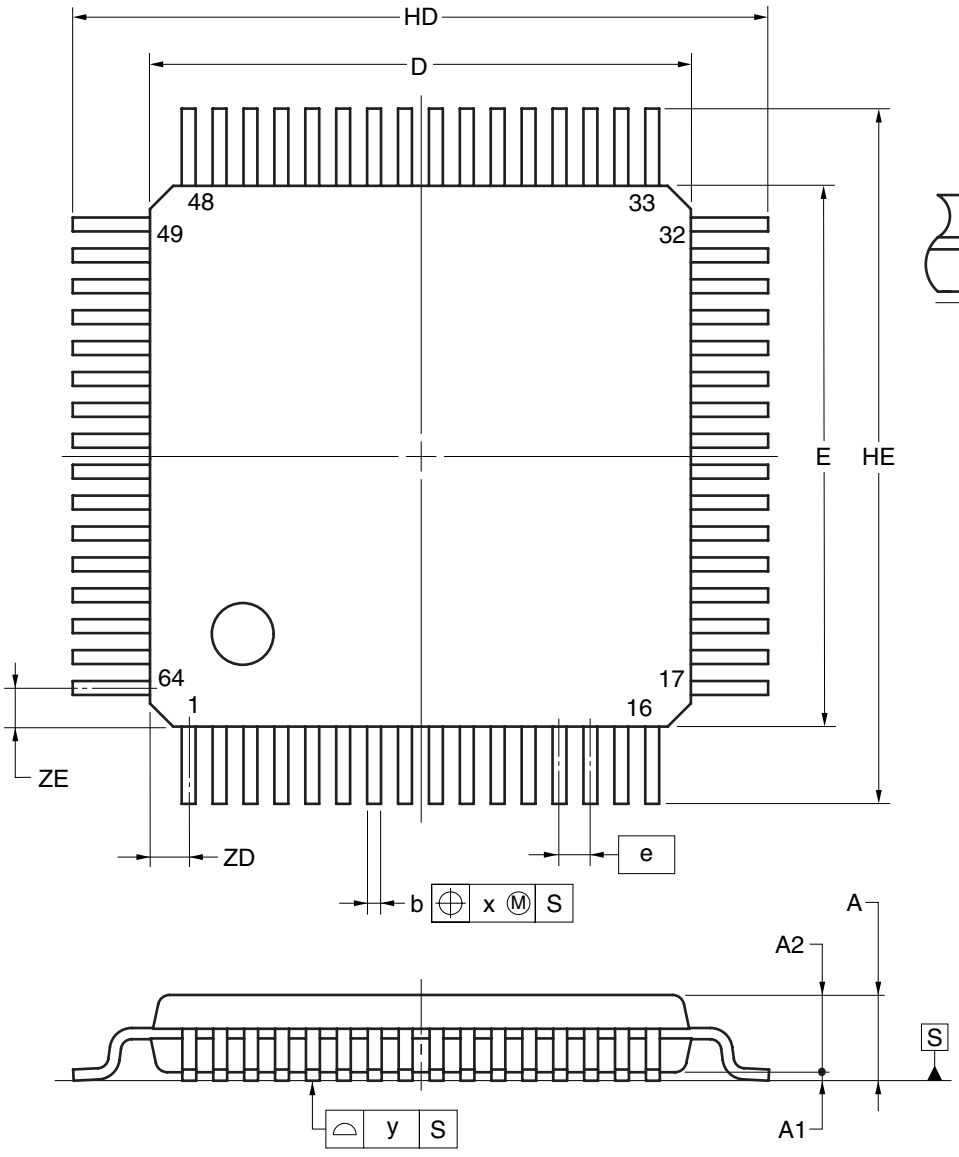

detail of lead end

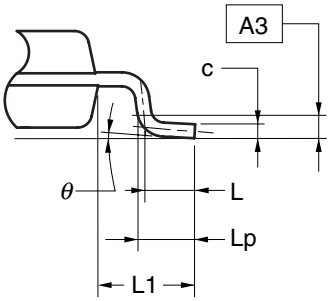

(UNIT:mm)

ITEM	DIMENSIONS
D	7.00±0.20
E	7.00±0.20
HD	9.00±0.20
HE	9.00±0.20
A	1.20 MAX.
A1	0.10±0.05
A2	1.00±0.05
A3	0.25
b	$0.16^{+0.07}_{-0.03}$
c	$0.125^{+0.075}_{-0.025}$
L	0.50
Lp	0.60±0.15
L1	1.00±0.20
θ	$3^{\circ}{}^{+5^{\circ}}_{-3^{\circ}}$
e	0.40
x	0.07
y	0.08
ZD	0.50
ZE	0.50

P64GA-40-HAB

NOTE
Each lead centerline is located within 0.07mm of its true position at maximum material condition.

- μPD78F0531FC-AA1-A, 78F0532FC-AA1-A, 78F0533FC-AA1-A, 78F0534FC-AA1-A, 78F0535FC-AA1-A, 78F0536FC-AA1-A, 78F0537FC-AA1-A, 78F0537DFC-AA1-A
- μPD78F0531AFC-AA1-A, 78F0532AFC-AA1-A, 78F0533AFC-AA1-A, 78F0534AFC-AA1-A, 78F0535AFC-AA1-A, 78F0536AFC-AA1-A, 78F0537AFC-AA1-A, 78F0537DAFC-AA1-A

64-PIN PLASTIC FLGA(5x5)

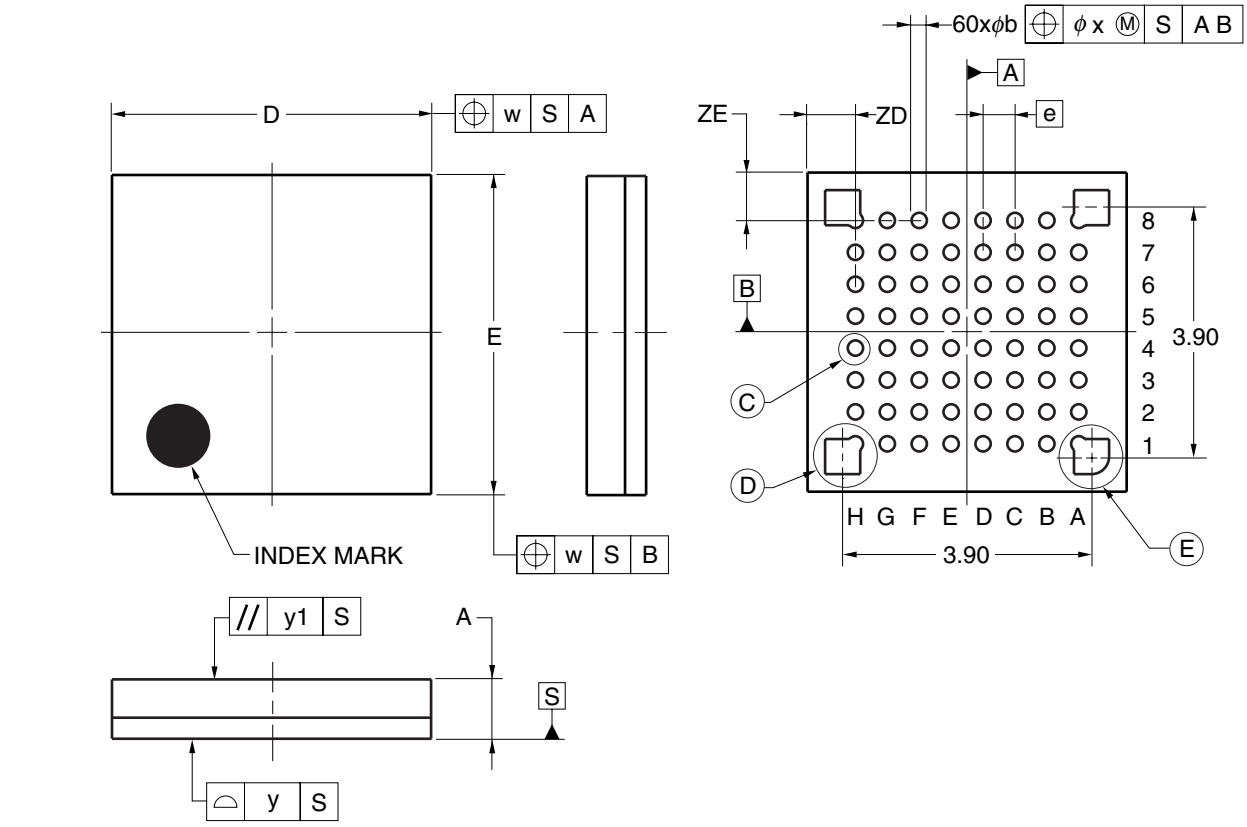

DETAIL OF Ⓒ PART

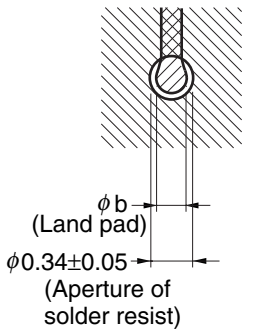

DETAIL OF Ⓓ PART

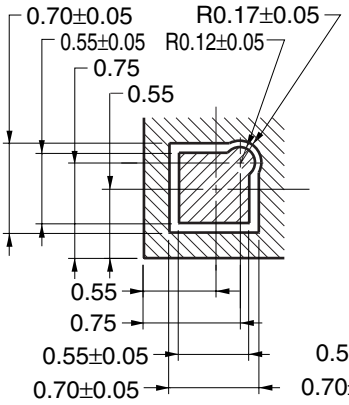

DETAIL OF Ⓔ PART

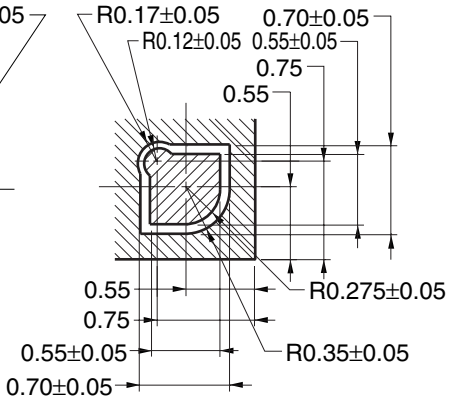

(UNIT:mm)

ITEM	DIMENSIONS
D	5.00±0.10
E	5.00±0.10
w	0.20
e	0.50
A	0.91±0.07
b	0.24±0.05
x	0.05
y	0.08
y1	0.20
ZD	0.75
ZE	0.75

P64FC-50-AA1-1

- μPD78F0531AF1-AA2-A, 78F0532AF1-AA2-A, 78F0533AF1-AA2-A, 78F0534AF1-AA2-A, 78F0535AF1-AA2-A, 78F0536AF1-AA2-A, 78F0537AF1-AA2-A, 78F0537DAF1-AA2-A

64-PIN PLASTIC FBGA (4x4)

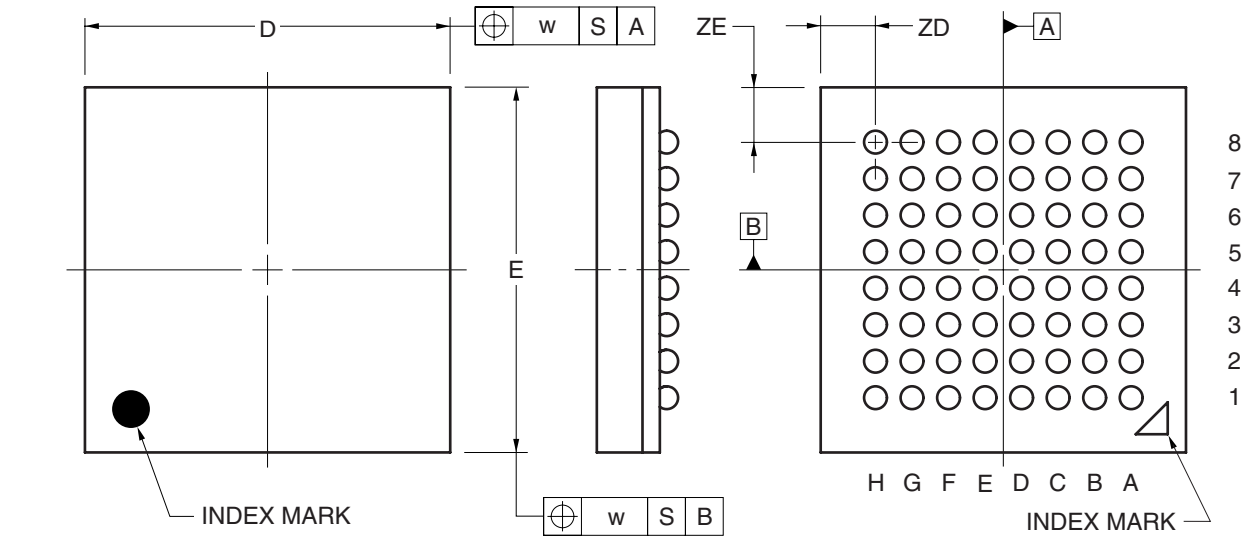

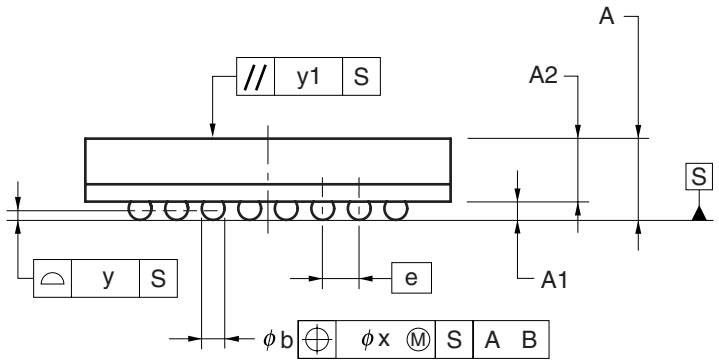

(UNIT:mm)

ITEM	DIMENSIONS
D	4.00±0.10
E	4.00±0.10
w	0.15
A	0.89±0.10
A1	0.20±0.05
A2	0.69
e	0.40
b	0.25±0.05
x	0.05
y	0.08
y1	0.20
ZD	0.60
ZE	0.60

P64F1-40-AA2

34.5 78K0/KF2

• μPD78F0544GC-UBT-A, 78F0545GC-UBT-A, 78F0546GC-UBT-A, 78F0547GC-UBT-A, 78F0547DGC-UBT-A

80-PIN PLASTIC LQFP(14x14)

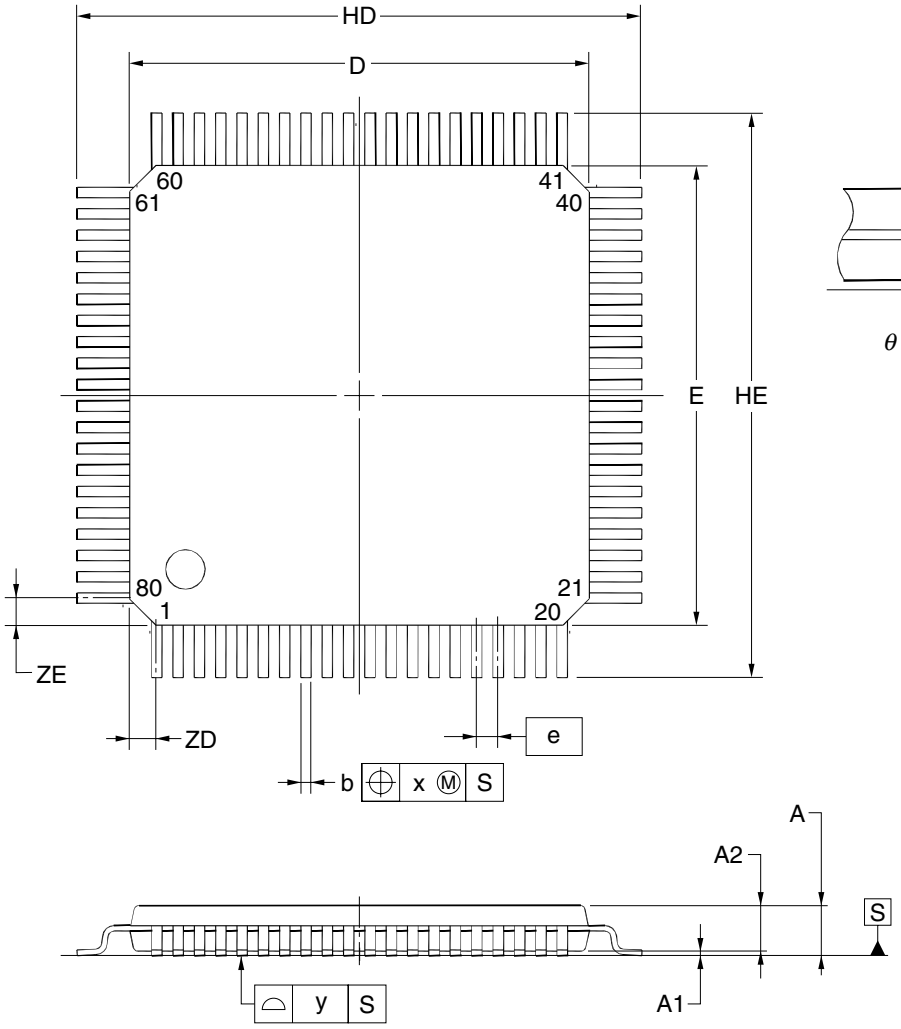

detail of lead end

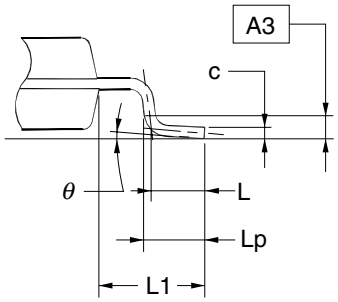

(UNIT:mm)

ITEM	DIMENSIONS
D	14.00±0.20
E	14.00±0.20
HD	17.20±0.20
HE	17.20±0.20
A	1.70 MAX.
A1	0.125±0.075
A2	1.40±0.05
A3	0.25
b	0.32±0.06
c	$0.17^{+0.03}_{-0.06}$
L	0.80
Lp	0.886±0.15
L1	1.60±0.20
θ	$3^{\circ}{}^{+5^{\circ}}_{-3^{\circ}}$
e	0.65
x	0.13
y	0.10
ZD	0.825
ZE	0.825

P80GC-65-UBT

NOTE
Each lead centerline is located within 0.13 mm of its true position at maximum material condition.

- μPD78F0544GC(A)-GAD-AX, 78F0545GC(A)-GAD-AX, 78F0546GC(A)-GAD-AX, 78F0547GC(A)-GAD-AX
- μPD78F0544GC(A2)-GAD-AX, 78F0545GC(A2)-GAD-AX, 78F0546GC(A2)-GAD-AX, 78F0547GC(A2)-GAD-AX
- μPD78F0544AGC-GAD-AX, 78F0545AGC-GAD-AX, 78F0546AGC-GAD-AX, 78F0547AGC-GAD-AX, 78F0547DAGC-GAD-AX
- μPD78F0544AGCA-GAD-G, 78F0545AGCA-GAD-G, 78F0546AGCA-GAD-G, 78F0547AGCA-GAD-G
- μPD78F0544AGCA2-GAD-G, 78F0545AGCA2-GAD-G, 78F0546AGCA2-GAD-G, 78F0547AGCA2-GAD-G

80-PIN PLASTIC LQFP(14x14)

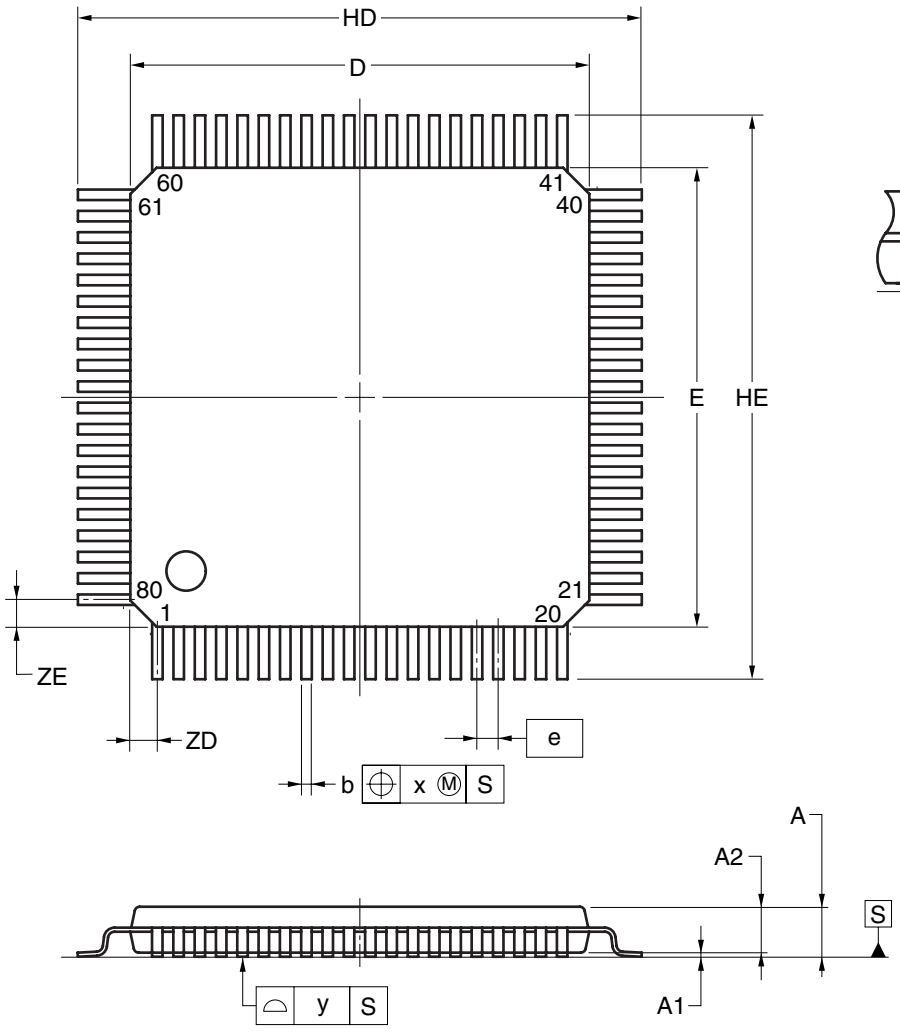

detail of lead end

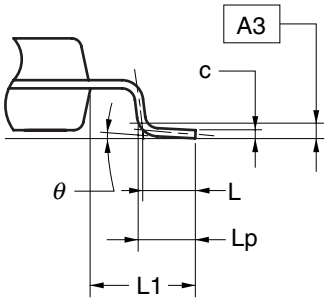

(UNIT:mm)

ITEM	DIMENSIONS
D	14.00±0.20
E	14.00±0.20
HD	17.20±0.20
HE	17.20±0.20
A	1.70 MAX.
A1	0.125±0.075
A2	1.40±0.05
A3	0.25
b	$0.30^{+0.08}_{-0.04}$
c	$0.125^{+0.075}_{-0.025}$
L	0.80
Lp	0.886±0.15
L1	1.60±0.20
θ	$3^{\circ}{}^{+5^{\circ}}_{-3^{\circ}}$
e	0.65
x	0.13
y	0.10
ZD	0.825
ZE	0.825

P80GC-65-GAD

NOTE
Each lead centerline is located within 0.13 mm of its true position at maximum material condition.

• μPD78F0544GK-8EU-A, 78F0545GK-8EU-A, 78F0546GK-8EU-A, 78F0547GK-8EU-A, 78F0547DGK-8EU-A

80-PIN PLASTIC LQFP(FINE PITCH)(12x12)

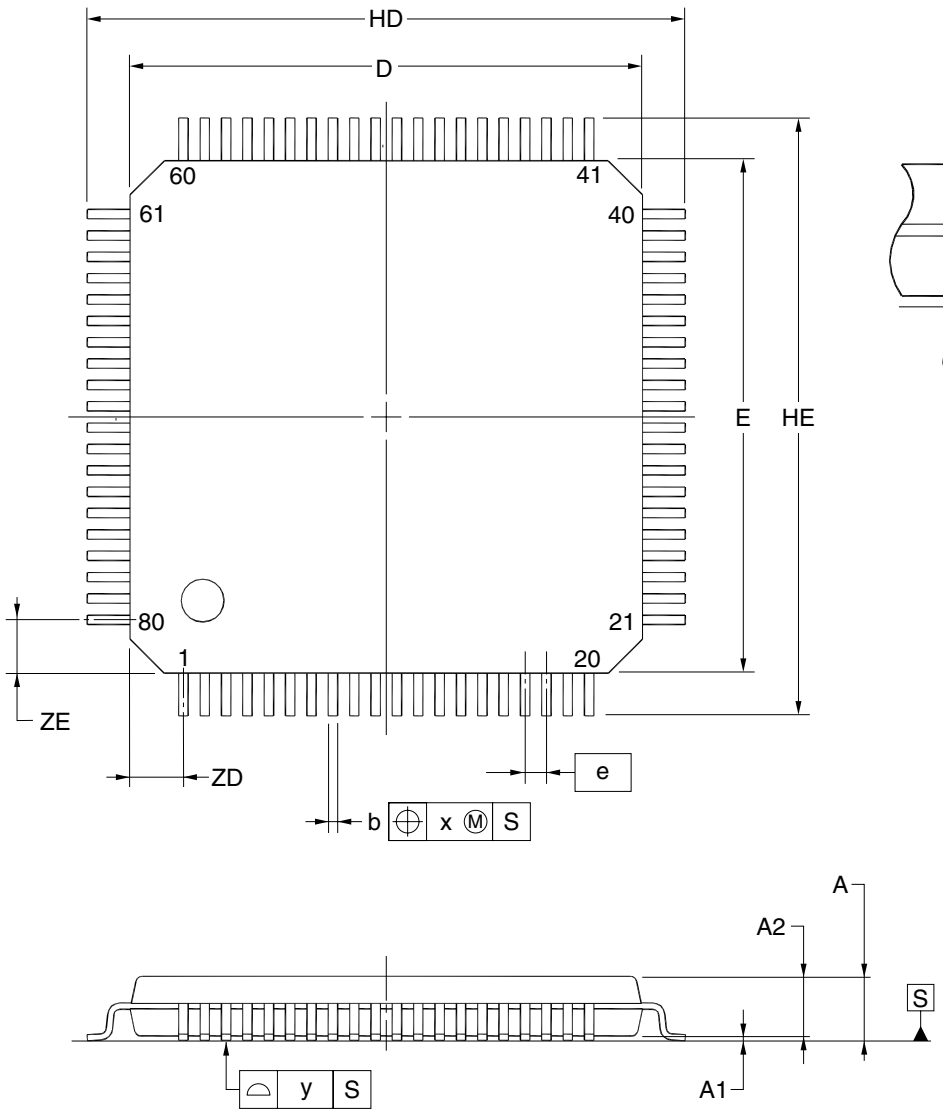

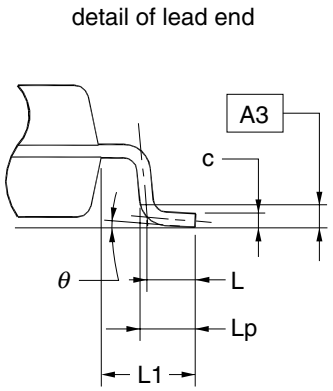

(UNIT:mm)

ITEM	DIMENSIONS
D	12.00±0.20
E	12.00±0.20
HD	14.00±0.20
HE	14.00±0.20
A	1.60 MAX.
A1	0.10±0.05
A2	1.40±0.05
A3	0.25
b	0.22±0.05
c	$0.145^{+0.055}_{-0.045}$
L	0.50
Lp	0.60±0.15
L1	1.00±0.20
θ	$3^{\circ}{}^{+5^{\circ}}_{-3^{\circ}}$
e	0.50
x	0.08
y	0.08
ZD	1.25
ZE	1.25

P80GK-50-8EU-1

NOTE
Each lead centerline is located within 0.08 mm of its true position at maximum material condition.

- μPD78F0544GK(A)-GAK-AX, 78F0545GK(A)-GAK-AX, 78F0546GK(A)-GAK-AX, 78F0547GK(A)-GAK-AX
- μPD78F0544GK(A2)-GAK-AX, 78F0545GK(A2)-GAK-AX, 78F0546GK(A2)-GAK-AX, 78F0547GK(A2)-GAK-AX
- μPD78F0544AGK-GAK-AX, 78F0545AGK-GAK-AX, 78F0546AGK-GAK-AX, 78F0547AGK-GAK-AX, 78F0547DAGK-GAK-AX
- μPD78F0544AGKA-GAK-G, 78F0545AGKA-GAK-G, 78F0546AGKA-GAK-G, 78F0547AGKA-GAK-G
- μPD78F0544AGKA2-GAK-G, 78F0545AGKA2-GAK-G, 78F0546AGKA2-GAK-G, 78F0547AGKA2-GAK-G

80-PIN PLASTIC LQFP(FINE PITCH)(12x12)

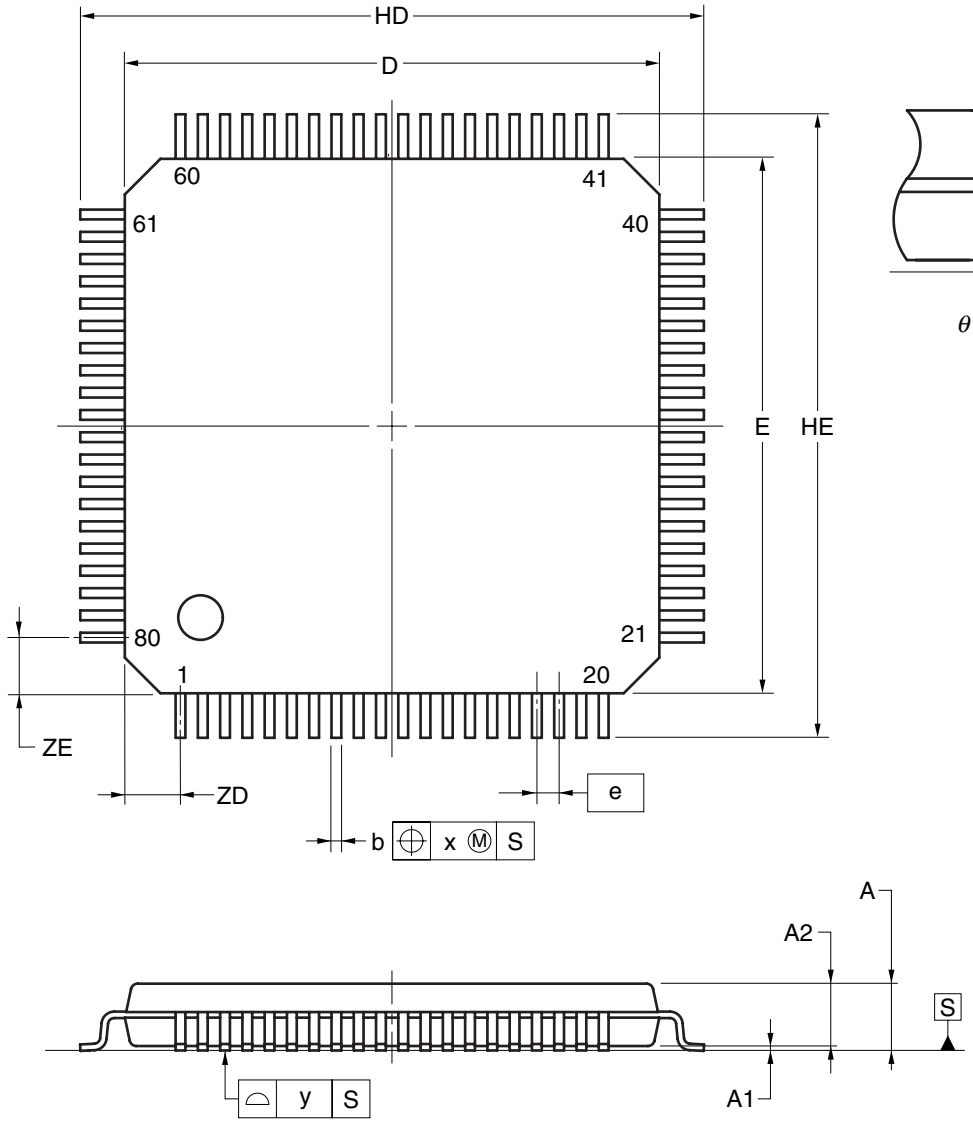

detail of lead end

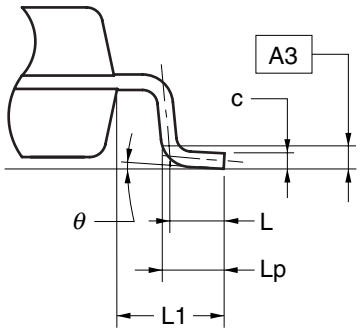

(UNIT:mm)

ITEM	DIMENSIONS
D	12.00±0.20
E	12.00±0.20
HD	14.00±0.20
HE	14.00±0.20
A	1.60 MAX.
A1	0.10±0.05
A2	1.40±0.05
A3	0.25
b	$0.20^{+0.07}_{-0.03}$
c	$0.125^{+0.075}_{-0.025}$
L	0.50
Lp	0.60±0.15
L1	1.00±0.20
θ	$3^{\circ}{}^{+5^{\circ}}_{-3^{\circ}}$
e	0.50
x	0.08
y	0.08
ZD	1.25
ZE	1.25

P80GK-50-GAK

NOTE
Each lead centerline is located within 0.08 mm of its true position at maximum material condition.

CHAPTER 35 RECOMMENDED SOLDERING CONDITIONS

These products should be soldered and mounted under the following recommended conditions.

For soldering methods and conditions other than those recommended below, please contact an Renesas Electronics sales representative.

For technical information, see the following website.

Semiconductor Device Mount Manual (http://www2.renesas.com/pkg/en/mount/index.html)

Table 35-1. Soldering Conditions of Conventional-specification Products (μPD78F05xx and 78F05xxD) (1/3)

(1) 36-pin plastic FLGA (4x4)
μPD78F050xFC-AA3-A (x = 0 to 3), 78F0503DFC-AA3-A
64-pin plastic FLGA (5x5)
μPD78F053xFC-AA1-A (x = 1 to 7), 78F0537DFC-AA1-A

Soldering Method	Soldering Conditions	Recommended Condition Symbol
Infrared reflow	Package peak temperature: 260°C, Time: 60 seconds max. (at 220°C or higher), Count: 3 times or less, Exposure limit: 7 days[Note] (after that, prebake at 125°C for 20 to 72 hours)	IR60-207-3

Note After opening the dry pack, store it at 25°C or less and 65% RH or less for the allowable storage period.

Caution The μPD78F05xxD has an on-chip debug function, which is provided for development and evaluation. Do not use the on-chip debug function in products designated for mass production, because the guaranteed number of rewritable times of the flash memory may be exceeded when this function is used, and product reliability therefore cannot be guaranteed. Renesas Electronics is not liable for problems occurring when the on-chip debug function is used.

Table 35-1. Soldering Conditions of Conventional-specification Products (μPD78F05xx and 78F05xxD) (2/3)

(2) 30-pin plastic SSOP (7.62 mm (300))
μPD78F050xMC-5A4-A (x = 0 to 3), 78F0503DMC-5A4-A
44-pin plastic LQFP (10x10)
μPD78F051xGB-UES-A (x = 1 to 3), 78F0513DGB-UES-A
48-pin plastic LQFP (fine pitch) (7x7)
μPD78F051xGA-8EU-A (x = 1 to 5), 78F0515DGA-8EU-A
μPD78F051xGA(A)-GAM-AX (x = 1 to 5), 78F051xGA(A2)-GAM-AX (x = 1 to 5)
52-pin plastic LQFP (10x10)
μPD78F052xGB-UET-A (x = 1 to 7), 78F0527DGB-UET-A
64-pin plastic LQFP (fine pitch) (10x10)
μPD78F053xGB-UEU-A (x = 1 to 7), 78F0537DGB-UEU-A
μPD78F053xGB(A)-GAH-AX (x = 1 to 7), 78F053xGB(A2)-GAH-AX (x = 1 to 7)
64-pin plastic LQFP (14x14)
μPD78F053xGC-UBS-A (x = 1 to 7), 78F0537DGC-UBS-A
64-pin plastic LQFP (12x12)
μPD78F053xGK-UET-A (x = 1 to 7), 78F0537DGK-UET-A
64-pin plastic TQFP (fine pitch) (7x7)
μPD78F053xGA-9EV-A (x = 1 to 7), 78F0537DGA-9EV-A
80-pin plastic LQFP (14x14)
μPD78F054xGC-UBT-A (x = 4 to 7), 78F0547DGC-UBT-A
80-pin plastic LQFP (fine pitch) (12x12)
μPD78F054xGK-8EU-A (x = 4 to 7), 78F0547DGK-8EU-A
μPD78F054xGK(A)-GAK-AX (x = 4 to 7), 78F054xGK(A2)-GAK-AX (x = 4 to 7)

Soldering Method	Soldering Conditions	Recommended Condition Symbol
Infrared reflow	Package peak temperature: 260°C, Time: 60 seconds max. (at 220°C or higher), Count: 3 times or less, Exposure limit: 7 days[Note] (after that, prebake at 125°C for 20 to 72 hours)	IR60-207-3
Partial heating	Pin temperature: 350°C max., Time: 3 seconds max. (per pin row)	–

Note After opening the dry pack, store it at 25°C or less and 65% RH or less for the allowable storage period.

Caution The μPD78F05xxD has an on-chip debug function, which is provided for development and evaluation. Do not use the on-chip debug function in products designated for mass production, because the guaranteed number of rewritable times of the flash memory may be exceeded when this function is used, and product reliability therefore cannot be guaranteed. Renesas Electronics is not liable for problems occurring when the on-chip debug function is used.

Table 35-1. Soldering Conditions of Conventional-specification Products (μPD78F05xx and 78F05xxD) (3/3)

(3) 30-pin plastic SSOP (7.62 mm (300))

μPD78F050xMC(A)-CAB-AX (x = 0 to 3), 78F050xMC(A2)-CAB-AX (x = 0 to 3)

44-pin plastic LQFP (10x10)

μPD78F051xGB(A)-GAF-AX (x = 1 to 3), 78F051xGB(A2)-GAF-AX (x = 1 to 3)

52-pin plastic LQFP (10x10)

μPD78F052xGB(A)-GAG-AX (x = 1 to 7), 78F052xGB(A2)-GAG-AX (x = 1 to 7)

64-pin plastic LQFP (14x14)

μPD78F053xGC(A)-GAL-AX (x = 1 to 7), 78F053xGC(A2)-GAL-AX (x = 1 to 7)

64-pin plastic LQFP (12x12)

μPD78F053xGK(A)-GAJ-AX (x = 1 to 7), 78F053xGK(A2)-GAJ-AX (x = 1 to 7)

80-pin plastic LQFP (14x14)

μPD78F054xGC(A)-GAD-AX (x = 4 to 7), 78F054xGC(A2)-GAD-AX (x = 4 to 7)

Soldering Method	Soldering Conditions	Recommended Condition Symbol
Infrared reflow	Package peak temperature: 260°C, Time: 60 seconds max. (at 220°C or higher), Count: 3 times or less, Exposure limit: 7 days[Note] (after that, prebake at 125°C for 20 to 72 hours)	IR60-207-3
Wave soldering	Solder bath temperature: 260°C max., Time: 10 seconds max., Count: Once, Preheating temperature: 120°C max. (package surface temperature), Exposure limit: 7 days[Note] (after that, prebake at 125°C for 20 to 72 hours)	WS60-207-1
Partial heating	Pin temperature: 350°C max., Time: 3 seconds max. (per pin row)	–

Note After opening the dry pack, store it at 25°C or less and 65% RH or less for the allowable storage period.

Caution Do not use different soldering methods together (except for partial heating).

Table 35-2. Soldering Conditions of Expanded-specification products (μPD78F05xxA and 78F05xxDA) (1/2)

(1) 36-pin plastic FLGA (4x4)

μPD78F050xAFC-AA3-A (x = 0 to 3), 78F0503DAFC-AA3-A

64-pin plastic FLGA (5x5)

μPD78F053xAFC-AA1-A (x = 1 to 7), 78F0537DAFC-AA1-A

Soldering Method	Soldering Conditions	Recommended Condition Symbol
Infrared reflow	Package peak temperature: 260°C, Time: 60 seconds max. (at 220°C or higher), Count: 3 times or less, Exposure limit: 7 days[Note] (after that, prebake at 125°C for 10 to 72 hours)	IR60-107-3

(2) 48-pin plastic LQFP (fine pitch) (7x7)

μPD78F051xAGA-GAM-AX (x = 1 to 5), 78F0515DAGA-GAM-AX

μPD78F051xAGAA-GAM-G (x = 1 to 5), 78F051xAGAA2-GAM-G (x = 1 to 5)

64-pin plastic LQFP (fine pitch) (10x10)

μPD78F053xAGB-GAH-AX (x = 1 to 7), 78F0537DAGB-GAH-AX

μPD78F053xAGBA-GAH-G (x = 1 to 7), 78F053xAGBA2-GAH-G (x = 1 to 7)

80-pin plastic LQFP (fine pitch) (12x12)

μPD78F054xAGK-GAK-AX (x = 4 to 7), 78F0547DAGK-GAK-AX

μPD78F054xAGKA-GAK-G (x = 4 to 7), 78F054xAGKA2-GAK-G (x = 4 to 7)

Soldering Method	Soldering Conditions	Recommended Condition Symbol
Infrared reflow	Package peak temperature: 260°C, Time: 60 seconds max. (at 220°C or higher), Count: 3 times or less, Exposure limit: 7 days[Note] (after that, prebake at 125°C for 10 to 72 hours)	IR60-107-3
Partial heating	Pin temperature: 350°C max., Time: 3 seconds max. (per pin row)	–

Note After opening the dry pack, store it at 25°C or less and 65% RH or less for the allowable storage period.

Caution The μPD78F05xxDA has an on-chip debug function, which is provided for development and evaluation. Do not use the on-chip debug function in products designated for mass production, because the guaranteed number of rewritable times of the flash memory may be exceeded when this function is used, and product reliability therefore cannot be guaranteed. Renesas Electronics is not liable for problems occurring when the on-chip debug function is used.

Table 35-2. Soldering Conditions of Expanded-specification products (μPD78F05xxA and 78F05xxDA) (2/2)

(3) 30-pin plastic SSOP (7.62 mm (300))
μPD78F050xAMC-CAB-AX (x = 0 to 3), 78F0503DAMC-CAB-AX
μPD78F050xAMCA-CAB-G (x = 0 to 3), 78F050xAMCA2-CAB-G (x = 0 to 3)
38-pin plastic SSOP (7.62 mm (300))
μPD78F051xAMC-GAA-AX (x = 1 to 3), 78F0513DAMC-GAA-AX
μPD78F051xAMCA-GAA-G (x = 1 to 3), 78F051xAMCA2-GAA-G (x = 1 to 3)
44-pin plastic LQFP (10x10)
μPD78F051xAGB-GAF-AX (x = 1 to 3), 78F0513DAGB-GAF-AX
μPD78F05x1AGBA-GAF-G (x = 1 to 3), 78F051xAGBA2-GAF-G (x = 1 to 3)
52-pin plastic LQFP (10x10)
μPD78F052xAGB-GAG-AX (x = 1 to 7), 78F0527DAGB-GAG-AX
μPD78F052xAGBA-GAG-G (x = 1 to 7), 78F052xAGBA2-GAG-G (x = 1 to 7)
64-pin plastic LQFP (14x14)
μPD78F053xAGC-GAL-AX (x = 1 to 7), 78F0537DAGC-GAL-AX
μPD78F053xAGCA-GAL-G (x = 1 to 7), 78F053xAGCA2-GAL-G (x = 1 to 7)
64-pin plastic LQFP (12x12)
μPD78F053xAGK-GAJ-AX (x = 1 to 7), 78F0537DAGK-GAJ-AX
μPD78F053xAGKA-GAJ-G (x = 1 to 7), 78F053xAGKA2-GAJ-G (x = 1 to 7)
80-pin plastic LQFP (14x14)
μPD78F054xAGC-GAD-G (x = 4 to 7), 78F0547DAGC-GAD-AX
μPD78F054xAGCA-GAD-G (x = 4 to 7), 78F054xAGCA2-GAD-G (x = 4 to 7)

Soldering Method	Soldering Conditions	Recommended Condition Symbol
Infrared reflow	Package peak temperature: 260°C, Time: 60 seconds max. (at 220°C or higher), Count: 3 times or less, Exposure limit: 7 days[Note] (after that, prebake at 125°C for 10 to 72 hours)	IR60-107-3
Wave soldering	Solder bath temperature: 260°C max., Time: 10 seconds max., Count: Once, Preheating temperature: 120°C max. (package surface temperature), Exposure limit: 7 days[Note] (after that, prebake at 125°C for 10 to 72 hours)	WS60-107-1
Partial heating	Pin temperature: 350°C max., Time: 3 seconds max. (per pin row)	–

Note After opening the dry pack, store it at 25°C or less and 65% RH or less for the allowable storage period.

Cautions 1. Do not use different soldering methods together (except for partial heating).
2. The μPD78F05xxDA has an on-chip debug function, which is provided for development and evaluation. Do not use the on-chip debug function in products designated for mass production, because the guaranteed number of rewritable times of the flash memory may be exceeded when this function is used, and product reliability therefore cannot be guaranteed. Renesas Electronics is not liable for problems occurring when the on-chip debug function is used.

CHAPTER 36 CAUTIONS FOR WAIT

36.1 Cautions for Wait

This product has two internal system buses.

One is a CPU bus and the other is a peripheral bus that interfaces with the low-speed peripheral hardware.

Because the clock of the CPU bus and the clock of the peripheral bus are asynchronous, unexpected illegal data may be passed if an access to the CPU conflicts with an access to the peripheral hardware.

When accessing the peripheral hardware that may cause a conflict, therefore, the CPU repeatedly executes processing, until the correct data is passed.

As a result, the CPU does not start the next instruction processing but waits. If this happens, the number of execution clocks of an instruction increases by the number of wait clocks (for the number of wait clocks, see **Tables 36-1** and **36-2**). This must be noted when real-time processing is performed.

36.2 Peripheral Hardware That Generates Wait

Table 36-1 lists the registers that issue a wait request when accessed by the CPU, and the number of CPU wait clocks and Table 36-2 lists the RAM accesses that issue a wait request and the number of CPU wait clocks.

Table 36-1. Registers That Generate Wait and Number of CPU Wait Clocks

Peripheral Hardware	Register	Access	Number of Wait Clocks
Serial interface UART0	ASIS0	Read	1 clock (fixed)
Serial interface UART6	ASIS6	Read	1 clock (fixed)
Serial interface IIC0	IICS0	Read	1 clock (fixed)
A/D converter	ADM	Write	1 to 5 clocks (when $f_{AD} = f_{PRS}/2$ is selected) 1 to 7 clocks (when $f_{AD} = f_{PRS}/3$ is selected) 1 to 9 clocks (when $f_{AD} = f_{PRS}/4$ is selected) 2 to 13 clocks (when $f_{AD} = f_{PRS}/6$ is selected) 2 to 17 clocks (when $f_{AD} = f_{PRS}/8$ is selected) 2 to 25 clocks (when $f_{AD} = f_{PRS}/12$ is selected)
	ADS	Write	
	ADPC	Write	
	ADCR	Read	
	The above number of clocks is when the same source clock is selected for f_{CPU} and f_{PRS}. The number of wait clocks can be calculated by the following expression and under the following conditions. <Calculating number of wait clocks> • Number of wait clocks = $\frac{2 f_{CPU}}{f_{AD}} + 1$ * Fraction is truncated if the number of wait clocks ≤ 0.5 and rounded up if the number of wait clocks > 0.5. f_{AD}: A/D conversion clock frequency ($f_{PRS}/2$ to $f_{PRS}/12$) f_{CPU}: CPU clock frequency f_{PRS}: Peripheral hardware clock frequency f_{XP}: Main system clock frequency <Conditions for maximum/minimum number of wait clocks> • Maximum number of times: Maximum speed of CPU (f_{XP}), lowest speed of A/D conversion clock ($f_{PRS}/12$) • Minimum number of times: Minimum speed of CPU ($f_{SUB}/2$), highest speed of A/D conversion clock ($f_{PRS}/2$)		

Caution When the peripheral hardware clock (f_{PRS}) is stopped, do not access the registers listed above using an access method in which a wait request is issued.

Remark The clock is the CPU clock (f_{CPU}).

Table 36-2. RAM Accesses That Generate Wait and Number of CPU Wait Clocks (78K0/KF2 only)

Area	Access	Number of Wait Clocks
Buffer RAM	Write	1 to 81 clocks[Note]
<Calculating maximum number of wait clocks> • Maximum number of wait clocks = $\frac{5 f_{CPU}}{f_W} + 1$ * Fraction is truncated if the number of wait clocks multiplied by ($1/f_{CPU}$) is equal or lower than t_{CPUL} and rounded up if higher than t_{CPUL}. f_W: Frequency of base clock selected by CKS00 bit of CSIS0 register (CKS00 = 0: f_{PRS}, CKS00 = 1: $f_{PRS}/2$) f_{CPU}: CPU clock frequency t_{CPUL}: CPU clock low-level width f_{PRS}: Peripheral hardware clock frequency		

Note No waits are generated when five CSIA0 operating clocks or more are inserted between writing to the RAM from the CSIA0 and writing to the buffer RAM from the CPU.

APPENDIX A DEVELOPMENT TOOLS

The following development tools are available for the development of systems that employ the 78K0/Kx2 microcontrollers.

Figure A-1 shows the development tool configuration.

Figure A-1. Development Tool Configuration (1/2)

(1) When using the in-circuit emulator QB-78K0KX2

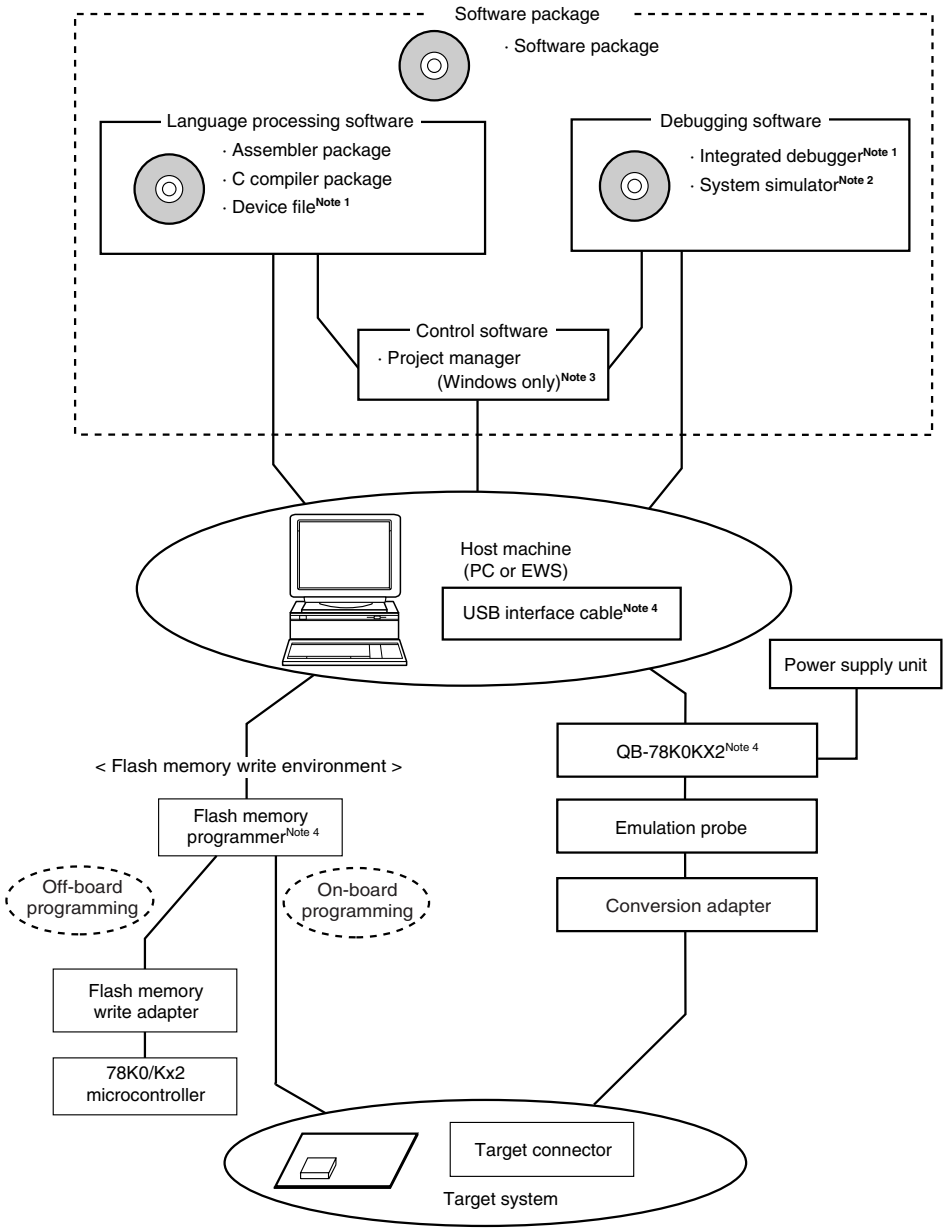

Notes 1. Download the device file for 78K0/Kx2 microcontrollers (DF780547) and the integrated debugger ID78K0-QB from the download site for development tools (http://www2.renesas.com/micro/en/ods/index.html).

2. SM+ for 78K0 (instruction simulation version) is included in the software package. SM+ for 78K0/Kx2 (instruction + peripheral simulation version) is not included.

3. The project manager PM+ is included in the assembler package.
PM+ cannot be used other than with Windows™.

4. QB-78K0KX2 is supplied with the integrated debugger ID78K0-QB, a USB interface cable, the on-chip debug emulator with programming function QB-MINI2, connection cables (10-pin and 16-pin cables), and the 78K0-OCD board. Any other products are sold separately.

Figure A-1. Development Tool Configuration (2/2)

(2) When using the on-chip debug emulator with programming function QB-MINI2

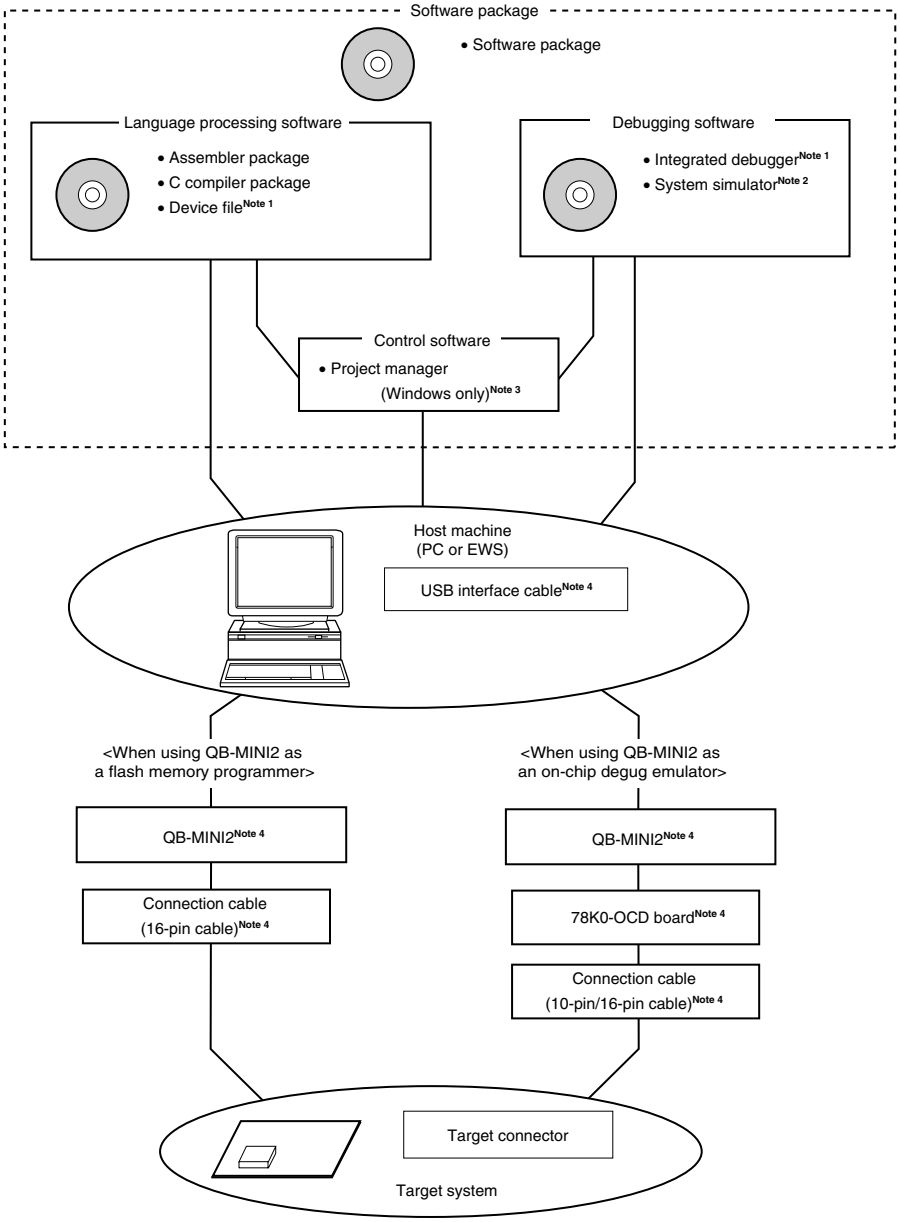

Notes 1. Download the device file for 78K0/Kx2 microcontrollers (DF780547) and the integrated debugger ID78K0-QB from the download site for development tools (http://www2.renesas.com/micro/en/ods/index.html).

2. SM+ for 78K0 (instruction simulation version) is included in the software package. SM+ for 78K0/Kx2 (instruction + peripheral simulation version) is not included.

3. The project manager PM+ is included in the assembler package.
PM+ cannot be used other than with Windows.

4. QB-MINI2 is supplied with USB interface cable, connection cables (10-pin cable and 16-pin cable), and 78K0-OCD board. Any other products are sold separately. In addition, download the software for operating the QB-MINI2 from the download site for development tools (http://www2.renesas.com/micro/en/ods/index.html).

A.1 Software Package

SP78K0 78K0 microcontroller software package	Development tools (software) common to the 78K0 microcontrollers are combined in this package.

A.2 Language Processing Software

RA78K0[Note 1] Assembler package	This assembler converts programs written in mnemonics into object codes executable with a microcontroller. This assembler is also provided with functions capable of automatically creating symbol tables and branch instruction optimization. This assembler should be used in combination with a device file (DF780547). **<Precaution when using RA78K0 in PC environment>** This assembler package is a DOS-based application. It can also be used in Windows, however, by using the Project Manager (PM+) on Windows. PM+ is included in assembler package.
CC78K0[Note 1] C compiler package	This compiler converts programs written in C language into object codes executable with a microcontroller. This compiler should be used in combination with an assembler package and device file. **<Precaution when using CC78K0 in PC environment>** This C compiler package is a DOS-based application. It can also be used in Windows, however, by using the Project Manager (PM+) on Windows. PM+ is included in assembler package.
DF780547[Note 2] Device file	This file contains information peculiar to the device. This device file should be used in combination with a tool (RA78K0, CC78K0, ID78K0-QB, and the system simulator). The corresponding OS and host machine differ depending on the tool to be used.

Notes 1. If the versions of RA78K0 and CC78K0 are Ver.4.00 or later, different versions of RA78K0 and CC78K0 can be installed on the same machine.

2. The DF780547 can be used in common with the RA78K0, CC78K0, ID78K0-QB, and the system simulator. Download the DF780547 from the download site for development tools (http://www2.renesas.com/micro/en/ods/index.html).

A.3 Flash Memory Programming Tools

A.3.1 When using flash memory programmer FG-FP5, FL-PR5, FG-FP4, and FL-PR4

FG-FP5, FL-PR5, PG-FP4 Note 1, FL-PR4 Flash memory programmer	Flash memory programmer dedicated to microcontrollers with on-chip flash memory.
FA-xxxx Note 2 Flash memory programming adapter	Flash memory programming adapter used connected to the flash memory programmer for use.

Notes 1. Phase-out

2. The part numbers of the flash memory programming adapter and the packages of the target device are described below.

Package		Flash Memory Programming Adapter
78K0/KB2	30-pin plastic SSOP (MC-5A4 and MC-CAB types)	FA-30MC-CAB-B, FA-78F0503MC-5A4-RX
	36-pin plastic FLGA (FC-AA3 type)	FA-36FC-AA3-B, FA-78F0503FC-AA3-RX
78K0/KC2	38-pin plastic SSOP (MC-GAA type)	FA-38MC-GAA-B
	44-pin plastic LQFP (GB-UES and GB-GAF types)	FA-44GB-GAF-B, FA-78F0513GB-UES-RX
	48-pin plastic LQFP (GA-8EU and GA-GAM types)	FA-48GA-GAM-B, FA-78F0515GA-8EU-RX
78K0/KD2	52-pin plastic LQFP (GB-UET and GB-GAG types)	FA-52GB-GAG-B, FA-78F0527GB-UET-RX
78K0/KE2	64-pin plastic LQFP (GB-UEU and GB-GAH types)	FA-64GB-GAH-B, FA-78F0537GB-UEU-RX
	64-pin plastic LQFP (GC-UBS and GC-GAL types)	FA-64GC-GAL-B, FA-78F0537GC-UBS-RX
	64-pin plastic LQFP (GK-UET and GK-GAJ types)	FA-64GK-GAJ-B, FA-78F0537GK-UET-RX
	64-pin plastic TQFP (GA-9EV and GA-HAB types)	FA-64GA-8EV-B, FA-64GA-HAB-B, FA-78F0537GA-9EV-RX
	64-pin plastic FLGA (FC-AA1 type)	FA-78F0537FC-AA1-RX
78K0/KF2	80-pin plastic LQFP (GC-UBT and GC-GAD types)	FA-80GC-GAD-B, FA-78F0547GC-UBT-RX
	80-pin plastic LQFP (GK-8EU and GK-GAK types)	FA-80GK-GAK-B, FA-78F0547GK-8EU-RX

Remarks 1. FL-PR5, FL-PR4, and FA-xxxx are products of Naito Densei Machida Mfg. Co., Ltd (http://www.ndk-m.co.jp/, TEL: +81-42-750-4172).

2. Use the latest version of the flash memory programming adapter.

A.3.2 When using on-chip debug emulator with programming function QB-MINI2

QB-MINI2 On-chip debug emulator with programming function	This is a flash memory programmer dedicated to microcontrollers with on-chip flash memory. It is available also as on-chip debug emulator which serves to debug hardware and software when developing application systems using the 78K0/Kx2 microcontrollers. When using this as flash memory programmer, it should be used in combination with a connection cable (16-pin cable) and a USB interface cable that is used to connect the host machine.
Target connector specifications	16-pin general-purpose connector (2.54 mm pitch)

Remarks 1. The QB-MINI2 is supplied with a USB interface cable and connection cables (10-pin cable and 16-pin cable), and the 78K0-OCD board. A connection cable (10-pin cable) and the 78K0-OCD board are used only when using the on-chip debug function.

2. Download the software for operating the QB-MINI2 from the download site for development tools (http://www2.renesas.com/micro/en/ods/index.html).

A.4 Debugging Tools (Hardware)

A.4.1 When using in-circuit emulator QB-78K0KX2

QB-78K0KX2 In-circuit emulator	This in-circuit emulator serves to debug hardware and software when developing application systems using the 78K0/Kx2 microcontrollers. It supports to the integrated debugger (ID78K0-QB). This emulator should be used in combination with a power supply unit and emulation probe, and the USB is used to connect this emulator to the host machine.
QB-144-CA-01 Check pin adapter	This check pin adapter is used in waveform monitoring using the oscilloscope, etc.
QB-80-EP-01T Emulation probe	This emulation probe is flexible type and used to connect the in-circuit emulator and target system.
QB-xxxx-EA-xxx[Note] Exchange adapter	This exchange adapter is used to perform pin conversion from the in-circuit emulator to target connector.
QB-xxxx-YS-xxx[Note] Space adapter	This space adapter is used to adjust the height between the target system and in-circuit emulator.
QB-xxxx-YQ-xxx[Note] YQ connector	This YQ connector is used to connect the target connector and exchange adapter.
QB-xxxx-HQ-xxx[Note] Mount adapter	This mount adapter is used to mount the target device with socket.
QB-xxxx-NQ-xxx[Note], Target connector	This target connector is used to mount on the target system.

(Note and Remarks are listed on the next page or later.)

Note The part numbers of the exchange adapter, space adapter, YQ connector, mount adapter, and target connector and the packages of the target device are described below.

Package		Exchange Adapter	Space Adapter	YQ Connector	Mount Adapter	Target Connector
78K0/KB2	30-pin plastic SSOP (MC-5A4 and MC-CAB types)	QB-30MC-EA-02T	QB-30MC-YS-01T	QB-30MC-YQ-01T	QB-30MC-HQ-01T	QB-30MC-NQ-01T
	36-pin plastic FLGA (FC-AA3 type)	QB-36FC-EA-01T	None	None	None	QB-36FC-NQ-01T
78K0/KC2	38-pin plastic SSOP (MC-GAA type)	QB-38MC-EA-01T	QB-38MC-YQ-01T	QB-38MC-YQ-01T	QB-38MC-HQ-01T	QB-38MC-NQ-01T
	44-pin plastic LQFP (GB-UES and GB-GAF types)	QB-44GB-EA-03T	QB-44GB-YS-01T	QB-44GB-YQ-01T	QB-44GB-HQ-01T	QB-44GB-NQ-01T
	48-pin plastic LQFP (GA-8EU and GA-GAM types)	QB-48GA-EA-02T	QB-48GA-YS-01T	QB-48GA-YQ-01T	QB-48GA-HQ-01T	QB-48GA-NQ-01T
78K0/KD2	52-pin plastic LQFP (GB-UET and GB-GAG types)	QB-52GB-EA-02T	QB-52GB-YS-01T	QB-52GB-YQ-01T	QB-52GB-HQ-01T	QB-52GB-NQ-01T
78K0/KE2	64-pin plastic LQFP (GB-UEU and GB-GAH types)	QB-64GB-EA-04T	QB-64GB-YS-01T	QB-64GB-YQ-01T	QB-64GB-HQ-01T	QB-64GB-NQ-01T
	64-pin plastic LQFP (GC-UBS and GC-GAL types)	QB-64GC-EA-03T	QB-64GC-YS-01T	QB-64GC-YQ-01T	QB-64GC-HQ-01T	QB-64GC-NQ-01T
	64-pin plastic LQFP (GK-UET and GK-GAJ types)	QB-64GK-EA-04T	QB-64GK-YS-01T	QB-64GK-YQ-01T	QB-64GK-HQ-01T	QB-64GK-NQ-01T
	64-pin plastic TQFP (GA-9EV and GA-HAB types)	QB-64GA-EA-01T	QB-64GA-YS-01T	QB-64GA-YQ-01T	QB-64GA-HQ-01T	QB-64GA-NQ-01T
	64-pin plastic FLGA (FC-AA1 type)	QB-64FC-EA-01T	None	None	None	QB-64FC-NQ-01T
78K0/KF2	80-pin plastic LQFP (GC-UBT and GC-GAD types)	QB-80GC-EA-01T	QB-80GC-YS-01T	QB-80GC-YQ-01T	QB-80GC-HQ-01T	QB-80GC-NQ-01T
	80-pin plastic LQFP (GK-8EU and GK-GAK type)	QB-80GK-EA-01T	QB-80GK-YS-01T	QB-80GK-YQ-01T	QB-80GK-HQ-01T	QB-80GK-NQ-01T

Remarks 1. The QB-78K0KX2 is supplied with the integrated debugger ID78K0-QB, a USB interface cable, the on-chip debug emulator QB-MINI2, connection cables (10-pin and 16-pin cables), and the 78K0-OCD board. Download the software for operating the QB-MINI2 from the download site for development tools (http://www2.renesas.com/micro/en/ods/index.html) when using the QB-MINI2.

2. The packed contents of QB-78K0KX2 differ depending on the part number, as follows.

Packed Contents / Part Number	In-Circuit Emulator	Emulation Probe	Exchange Adapter	YQ Connector	Target Connector
QB-78K0KX2-ZZZ	QB-78K0KX2	None			
QB-78K0KX2-T30MC		QB-80-EP-01T	QB-30MC-EA-02T	QB-30MC-YQ-01T	QB-30MC-NQ-01T
QB-78K0KX2-T36FC			QB-36FC-EA-01T	None	QB-36FC-NQ-01T
QB-78K0KX2-T38MC			QB-38MC-EA-01T	QB-38MC-YQ-01T	QB-38MC-NQ-01T
QB-78K0KX2-T44GB			QB-44GB-EA-03T	QB-44GB-YQ-01T	QB-44GB-NQ-01T
QB-78K0KX2-T48GA			QB-48GA-EA-02T	QB-48GA-YQ-01T	QB-48GA-NQ-01T
QB-78K0KX2-T52GB			QB-52GB-EA-02T	QB-52GB-YQ-01T	QB-52GB-NQ-01T
QB-78K0KX2-T64GB			QB-64GB-EA-04T	QB-64GB-YQ-01T	QB-64GB-NQ-01T
QB-78K0KX2-T64GC			QB-64GC-EA-03T	QB-64GC-YQ-01T	QB-64GC-NQ-01T
QB-78K0KX2-T64GK			QB-64GK-EA-04T	QB-64GK-YQ-01T	QB-64GK-NQ-01T
QB-78K0KX2-T64GA			QB-64GA-EA-01T	QB-64GA-YQ-01T	QB-64GA-NQ-01T
QB-78K0KX2-T64FC			QB-64FC-EA-01T	None	QB-64FC-NQ-01T
QB-78K0KX2-T80GC			QB-80GC-EA-01T	QB-80GC-YQ-01T	QB-80GC-NQ-01T
QB-78K0KX2-T80GK			QB-80GK-EA-01T	QB-80GK-YQ-01T	QB-80GK-NQ-01T

Note Under development

A.4.2 When using on-chip debug emulator with programming function QB-MINI2

QB-MINI2 On-chip debug emulator with programming function	This on-chip debug emulator serves to debug hardware and software when developing application systems using the 78K0/Kx2. It is available also as flash memory programmer dedicated to microcontrollers with on-chip flash memory. When using this as on-chip debug emulator, it should be used in combination with a connection cable (10-pin cable or 16-pin cable), a USB interface cable that is used to connect the host machine, and the 78K0-OCD board.
Target connector specifications	10-pin general-purpose connector (2.54 mm pitch) or 16-pin general-purpose connector (2.54 mm pitch)

Remarks 1. The QB-MINI2 is supplied with a USB interface cable and connection cables (10-pin cable and 16-pin cable), and the 78K0-OCD board. A connection cable (10-pin cable) and the 78K0-OCD board are used only when using the on-chip debug function.

2. Download the software for operating the QB-MINI2 from the download site for development tools (http://www2.renesas.com/micro/en/ods/index.html).

A.5 Debugging Tools (Software)

ID78K0-QB[Note] Integrated debugger	This debugger supports the in-circuit emulators for the 78K0 microcontrollers. The ID78K0-QB is Windows-based software. It has improved C-compatible debugging functions and can display the results of tracing with the source program using an integrating window function that associates the source program, disassemble display, and memory display with the trace result. It should be used in combination with the device file (DF780547).
SM+ for 78K0 SM+ for 78K0/Kx2 System simulator	System simulator is Windows-based software. It is used to perform debugging at the C source level or assembler level while simulating the operation of the target system on a host machine. Use of system simulator allows the execution of application logical testing and performance testing on an independent basis from hardware development, thereby providing higher development efficiency and software quality. System simulator should be used in combination with the device file (DF780547). The following two types of system simulators supporting the 78K0/Kx2 microcontrollers are available. • SM+ for 78K0 (instruction simulation version) This can only simulate a CPU. It is included in the software package. • SM+ for 78K0/ Kx2 (instruction + peripheral simulation version) This can simulate a CPU and peripheral hardware (ports, timers, serial interfaces, etc.). It is sold separately from the software package.

Note Download the ID78K0-QB from the download site for development tools (http://www2.renesas.com/micro/en/ods/index.html).

APPENDIX B NOTES ON TARGET SYSTEM DESIGN

This chapter shows areas on the target system where component mounting is prohibited and areas where there are component mounting height restrictions when the QB-78K0KX2 is used.

Figure B-1. For 30-Pin MC Package

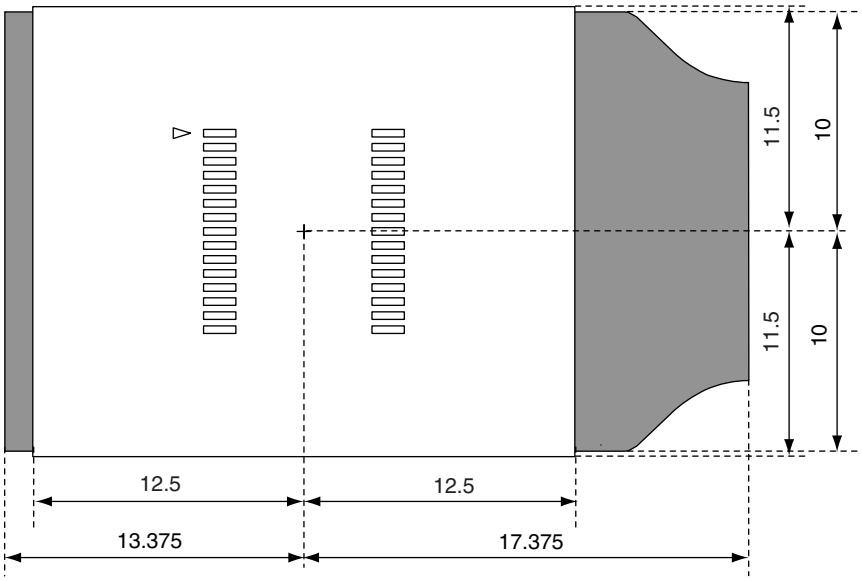

□ : Exchange adapter area: Components up to 17.45 mm in height can be mounted[Note]

■ : Emulation probe tip area: Components up to 24.45 mm in height can be mounted[Note]

Note Height can be adjusted by using space adapters (each adds 2.4 mm)

Figure B-2. For 36-Pin FC Package

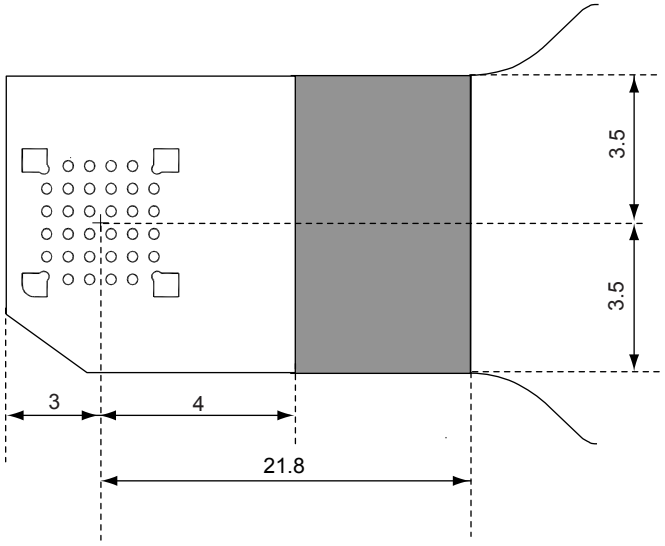

□: Exchange adapter area: Components up to 2.5 mm in height can be mounted
■: Emulation probe tip area: Components up to 4.5 mm in height can be mounted

Figure B-3. For 44-Pin GB Package

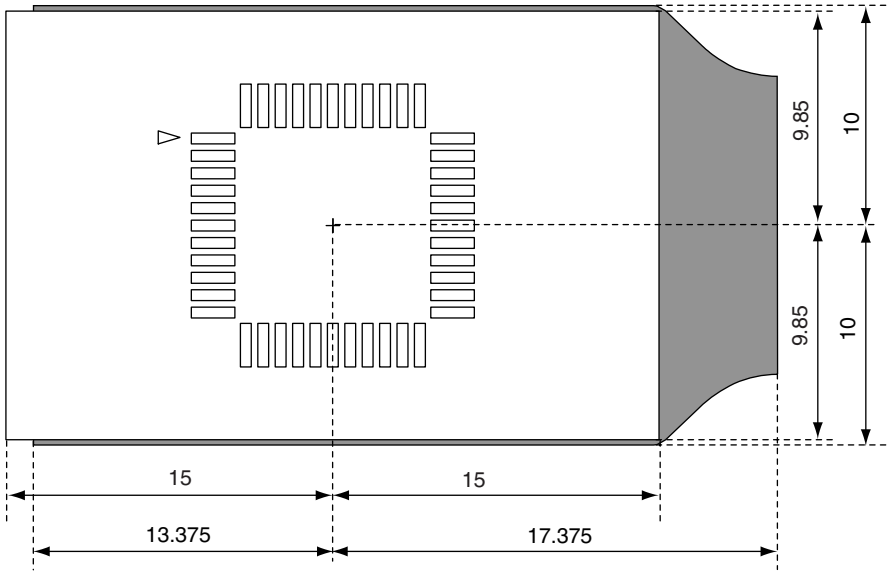

□: Exchange adapter area: Components up to 17.45 mm in height can be mounted[Note]
■: Emulation probe tip area: Components up to 24.45 mm in height can be mounted[Note]

Note Height can be adjusted by using space adapters (each adds 2.4 mm)

Figure B-4. For 48-Pin GA Package

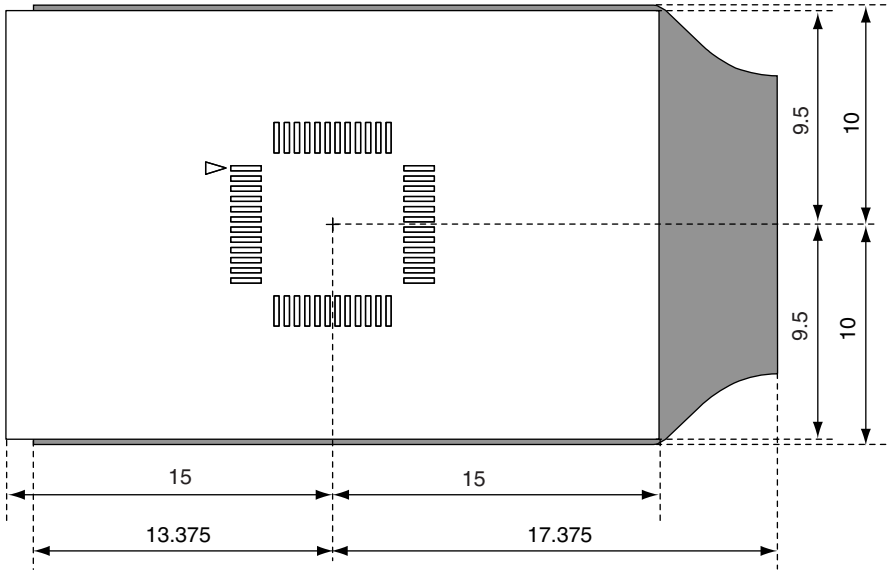

□: Exchange adapter area: Components up to 17.45 mm in height can be mounted[Note]
■: Emulation probe tip area: Components up to 24.45 mm in height can be mounted[Note]

Note Height can be adjusted by using space adapters (each adds 2.4 mm)

Figure B-5. For 52-Pin GB Package

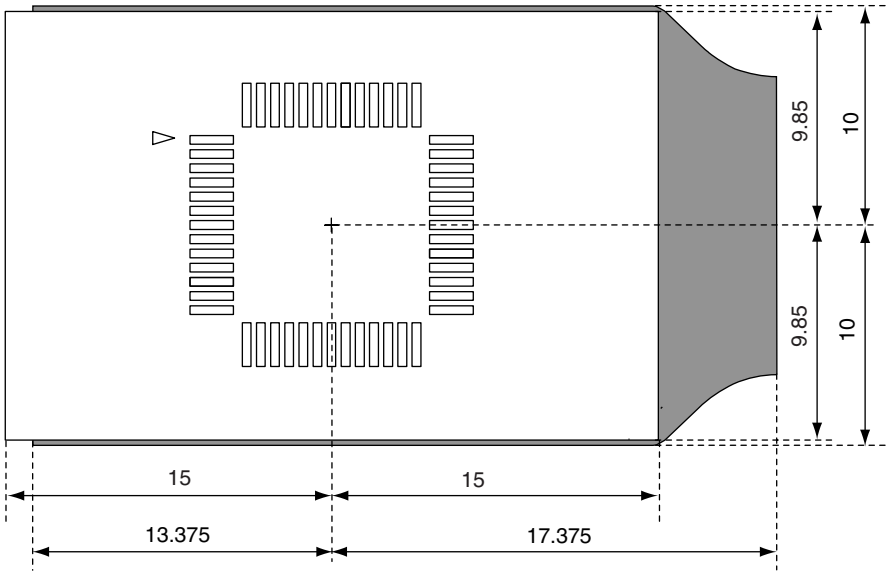

□: Exchange adapter area: Components up to 17.45 mm in height can be mounted[Note]
■: Emulation probe tip area: Components up to 24.45 mm in height can be mounted[Note]

Note Height can be adjusted by using space adapters (each adds 2.4 mm)

Figure B-6. For 64-Pin FC Package

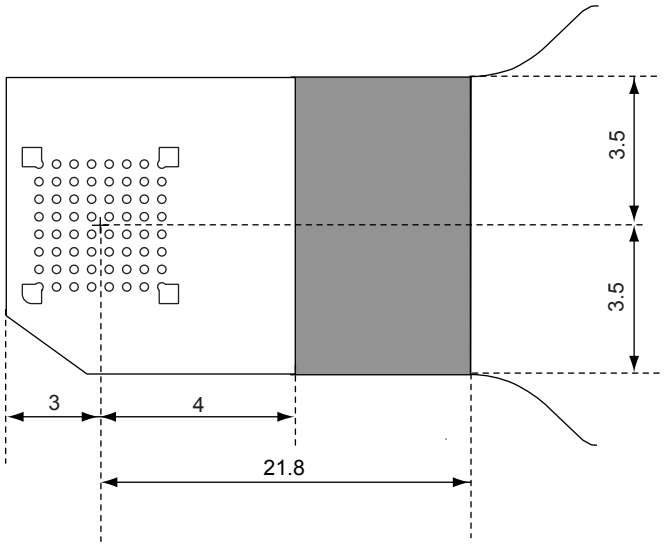

□: Exchange adapter area (connector part): Components up to 2.45 mm in height can be mounted
■: Exchange adapter area (probe part): Components up to 4.5 mm in height can be mounted

Figure B-7. For 64-Pin GA Package

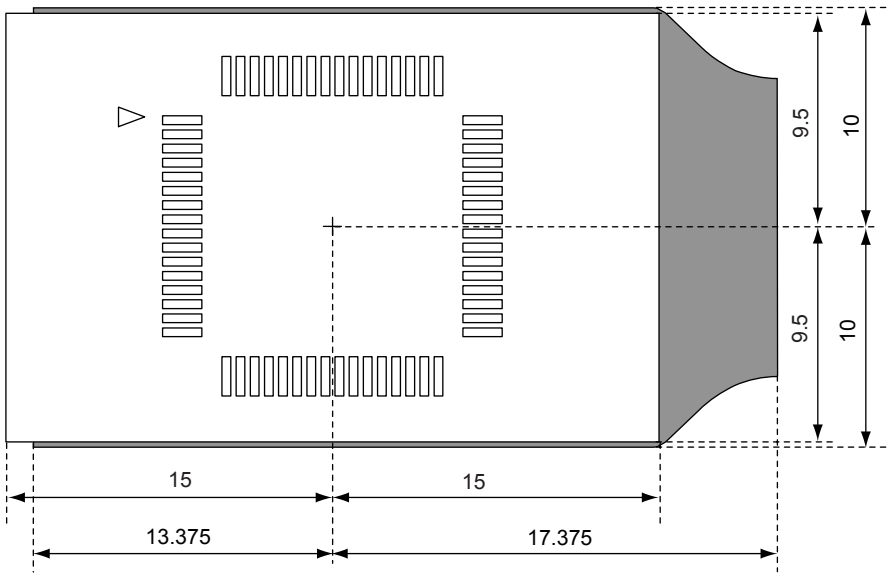

□: Exchange adapter area: Components up to 17.45 mm in height can be mounted[Note]
■: Emulation probe tip area: Components up to 24.45 mm in height can be mounted[Note]

Note Height can be adjusted by using space adapters (each adds 2.4 mm)

Figure B-8. For 64-Pin GB Package

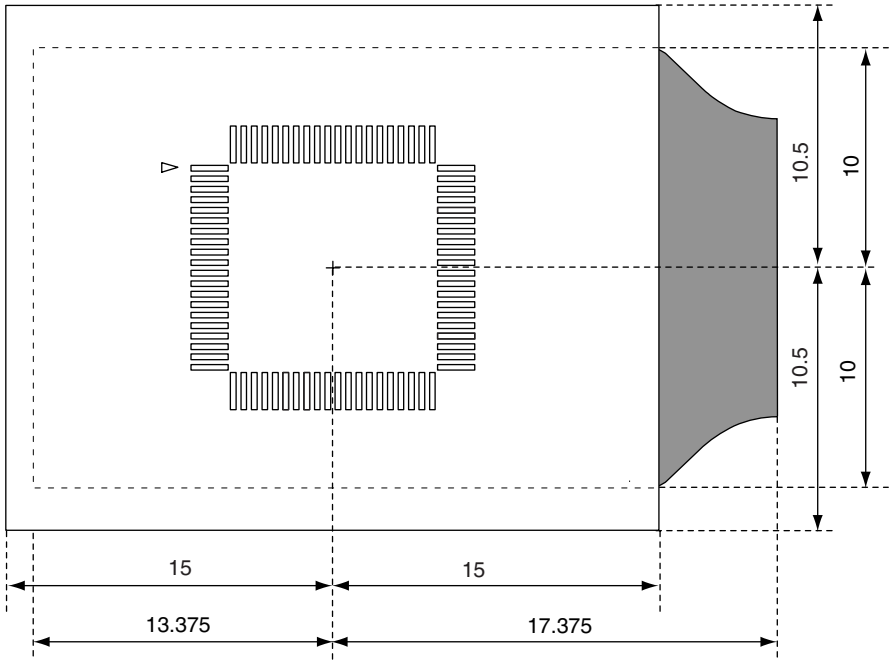

□ : Exchange adapter area: Components up to 17.45 mm in height can be mounted[Note]
■ : Emulation probe tip area: Components up to 24.45 mm in height can be mounted[Note]

Note Height can be adjusted by using space adapters (each adds 2.4 mm)

Figure B-9. For 64-Pin GC Package

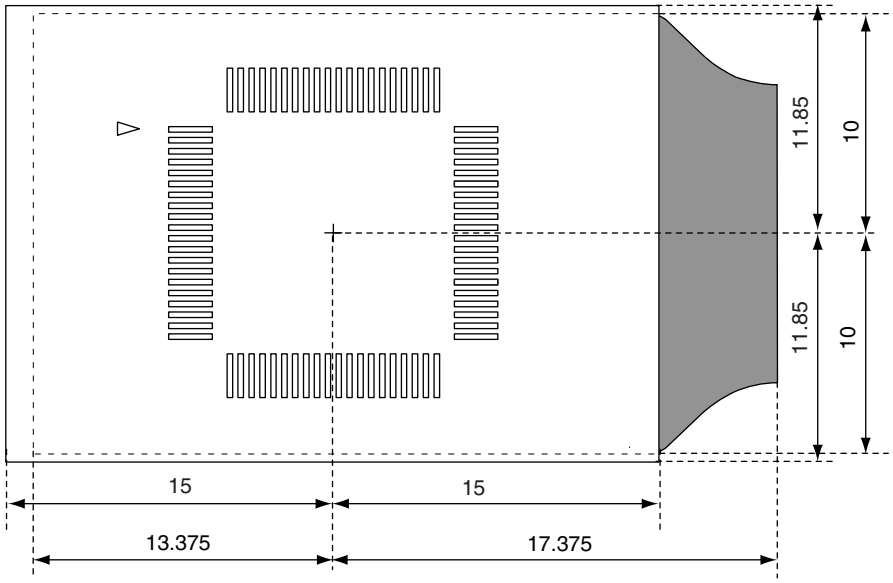

□ : Exchange adapter area: Components up to 17.45 mm in height can be mounted[Note]
■ : Emulation probe tip area: Components up to 24.45 mm in height can be mounted[Note]

Note Height can be adjusted by using space adapters (each adds 2.4 mm)

Figure B-10. For 64-Pin GK Package

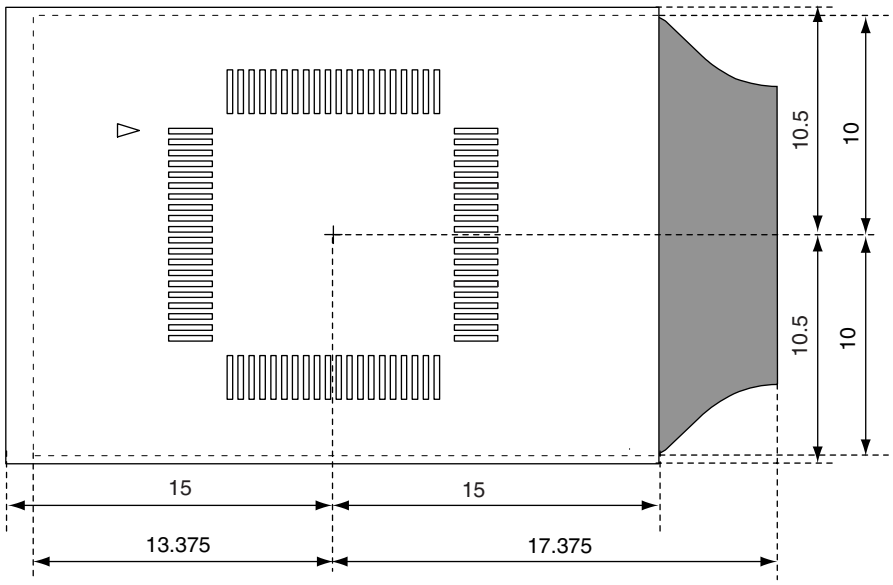

□ : Exchange adapter area: Components up to 17.45 mm in height can be mounted[Note]
■ : Emulation probe tip area: Components up to 24.45 mm in height can be mounted[Note]

Note Height can be adjusted by using space adapters (each adds 2.4 mm)

Figure B-11. For 80-Pin GC Package

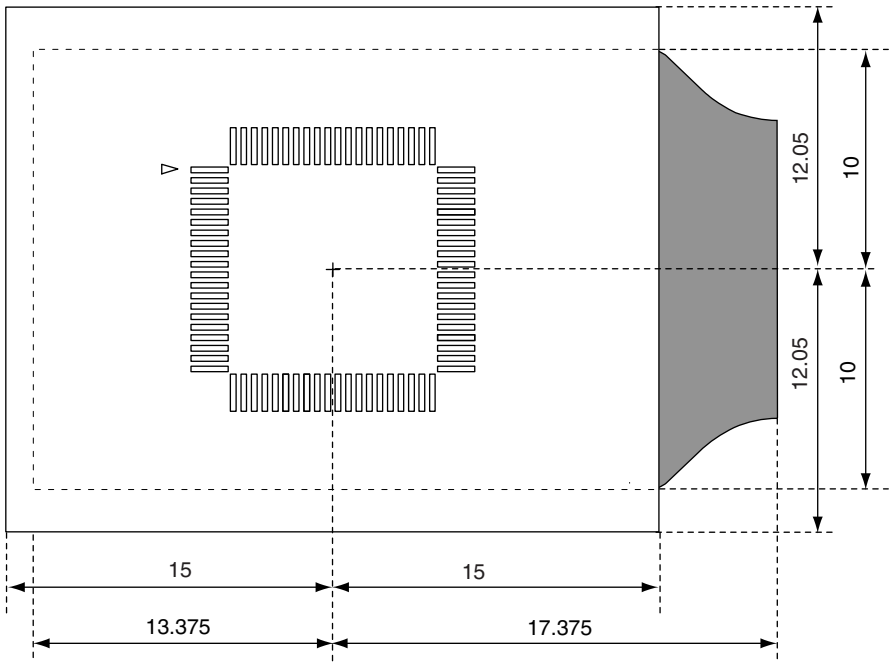

□ : Exchange adapter area: Components up to 17.45 mm in height can be mounted[Note]
■ : Emulation probe tip area: Components up to 24.45 mm in height can be mounted[Note]

Note Height can be adjusted by using space adapters (each adds 2.4 mm)

Figure B-12. For 80-Pin GK Package

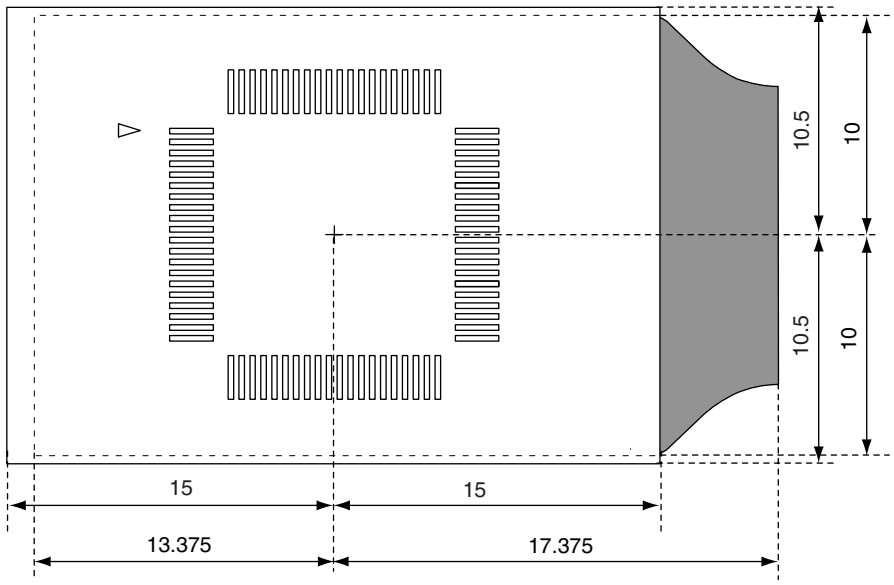

□ : Exchange adapter area: Components up to 17.45 mm in height can be mounted[Note]

■ : Emulation probe tip area: Components up to 24.45 mm in height can be mounted[Note]

Note Height can be adjusted by using space adapters (each adds 2.4 mm)

APPENDIX C REGISTER INDEX

C.1 Register Index (In Alphabetical Order with Respect to Register Names)

[A]

A/D converter mode register (ADM) 412
A/D port configuration register (ADPC) 219, 419
Analog input channel specification register (ADS) 418
Asynchronous serial interface control register 6 (ASICL6) 466
Asynchronous serial interface operation mode register 0 (ASIM0) 436
Asynchronous serial interface operation mode register 6 (ASIM6) 460
Asynchronous serial interface reception error status register 0 (ASIS0) 438
Asynchronous serial interface reception error status register 6 (ASIS6) 462
Asynchronous serial interface transmission status register 6 (ASIF6) 463
Automatic data transfer address count register 0 (ADTC0) 523
Automatic data transfer address point specification register 0 (ADTP0) 521
Automatic data transfer interval specification register 0 (ADTI0) 522

[B]

Baud rate generator control register 0 (BRGC0) 439
Baud rate generator control register 6 (BRGC6) 465

[C]

Capture/compare control register 00 (CRC00) 280
Capture/compare control register 01 (CRC01) 280
Clock operation mode select register (OSCCTL) 229
Clock output selection register (CKS) 404
Clock selection register 6 (CKSR6) 463

[D]

Divisor selection register 0 (BRGCA0) 520

[E]

8-bit A/D conversion result register (ADCRH) 417
8-bit timer compare register 50 (CR50) 347
8-bit timer compare register 51 (CR51) 347
8-bit timer counter 50 (TM50) 347
8-bit timer counter 51 (TM51) 347
8-bit timer H carrier control register 1 (TMCYC1) 371
8-bit timer H compare register 00 (CMP00) 366
8-bit timer H compare register 01 (CMP01) 366
8-bit timer H compare register 10 (CMP10) 366
8-bit timer H compare register 11 (CMP11) 366
8-bit timer H mode register 0 (TMHMD0) 367
8-bit timer H mode register 1 (TMHMD1) 367
8-bit timer mode control register 50 (TMC50) 351
8-bit timer mode control register 51 (TMC51) 351
External interrupt falling edge enable register (EGN) 652

External interrupt rising edge enable register (EGP) 652

[I]

IIC clock selection register 0 (IICCL0) 565
IIC control register 0 (IICC0) 556
IIC flag register 0 (IICF0) 563
IIC function expansion register 0 (IICX0) 566
IIC shift register 0 (IIC0) 553
IIC status register 0 (IICS0) 561
Input switch control register (ISC) 468
Internal expansion RAM size switching register (IXS) 722
Internal memory size switching register (IMS) 721
Internal oscillation mode register (RCM) 235
Interrupt mask flag register 0H (MK0H) 643
Interrupt mask flag register 0L (MK0L) 643
Interrupt mask flag register 1H (MK1H) 643
Interrupt mask flag register 1L (MK1L) 643
Interrupt request flag register 0H (IF0H) 637
Interrupt request flag register 0L (IF0L) 637
Interrupt request flag register 1H (IF1H) 637
Interrupt request flag register 1L (IF1L) 637

[K]

Key return mode register (KRM) 665

[L]

Low-voltage detection level selection register (LVIS) 701
Low-voltage detection register (LVIM) 699

[M]

Main clock mode register (MCM) 237
Main OSC control register (MOC) 236
Memory Bank Select Register (BANK) 150
Multiplication/division data register A0 (MDA0H, MDA0L) 623
Multiplication/division data register B0 (MDB0) 624
Multiplier/divider control register 0 (DMUC0) 625

[O]

Oscillation stabilization time counter status register (OSTC) 238, 667
Oscillation stabilization time select register (OSTS) 239, 668

[P]

Port mode register 0 (PM0) 205, 288, 498
Port mode register 1 (PM1) 205, 353, 372, 440, 468, 498
Port mode register 2 (PM2) 205, 420
Port mode register 3 (PM3) 205, 353
Port mode register 4 (PM4) 205
Port mode register 5 (PM5) 205
Port mode register 6 (PM6) 205, 568
Port mode register 7 (PM7) 205

Port mode register 12 (PM12) 205, 702
Port mode register 14 (PM14) 205, 407, 523
Port register 0 (P0) 210
Port register 1 (P1) 210
Port register 2 (P2) 210
Port register 3 (P3) 210
Port register 4 (P4) 210
Port register 5 (P5) 210
Port register 6 (P6) 210
Port register 7 (P7) 210
Port register 12 (P12) 210
Port register 13 (P13) 210
Port register 14 (P14) 210
Prescaler mode register 00 (PRM00) 285
Prescaler mode register 01 (PRM01) 285
Priority specification flag register 0H (PR0H) 648
Priority specification flag register 0L (PR0L) 648
Priority specification flag register 1H (PR1H) 648
Priority specification flag register 1L (PR1L) 648
Processor clock control register (PCC) 232
Pull-up resistor option register 0 (PU0) 215
Pull-up resistor option register 1 (PU1) 215
Pull-up resistor option register 3 (PU3) 215
Pull-up resistor option register 4 (PU4) 215
Pull-up resistor option register 5 (PU5) 215
Pull-up resistor option register 6 (PU6) 215
Pull-up resistor option register 7 (PU7) 215
Pull-up resistor option register 12 (PU12) 215
Pull-up resistor option register 14 (PU14) 215

[R]

Receive buffer register 0 (RXB0) 435
Receive buffer register 6 (RXB6) 459
Receive shift register 0 (RXS0) 435
Receive shift register 6 (RXS6) 459
Remainder data register 0 (SDR0) 623
Reset control flag register (RESF) 691

[S]

Serial clock selection register 10 (CSIC10) 495
Serial clock selection register 11 (CSIC11) 495
Serial I/O shift register 0 (SIOA0) 515
Serial I/O shift register 10 (SIO10) 492
Serial I/O shift register 11 (SIO11) 492
Serial operation mode register 10 (CSIM10) 493
Serial operation mode register 11 (CSIM11) 493
Serial operation mode specification register 0 (CSIMA0) 515
Serial status register 0 (CSIS0) 517

Serial trigger register 0 (CSIT0) 519
Slave address register 0 (SVA0) 553
16-bit timer capture/compare register 000 (CR000) 273
16-bit timer capture/compare register 001 (CR001) 273
16-bit timer capture/compare register 010 (CR010) 273
16-bit timer capture/compare register 011 (CR011) 273
16-bit timer counter 00 (TM00) 272
16-bit timer counter 01 (TM00) 272
16-bit timer mode control register 00 (TMC00) 277
16-bit timer mode control register 01 (TMC01) 277
16-bit timer output control register 00 (TOC00) 282
16-bit timer output control register 01 (TOC01) 282

[T]

Timer clock selection register 50 (TCL50) 348
Timer clock selection register 51 (TCL51) 348
10-bit A/D conversion result register (ADCR) 416
Transmit buffer register 10 (SOTB10) 492
Transmit buffer register 11 (SOTB11) 492
Transmit buffer register 6 (TXB6) 459
Transmit shift register 0 (TXS0) 435
Transmit shift register 6 (TXS6) 459

[W]

Watch timer operation mode register (WTM) 391
Watchdog timer enable register (WDTE) 398

C.2 Register Index (In Alphabetical Order with Respect to Register Symbol)

[A]

ADCR: 10-bit A/D conversion result register ... 416
ADCRH: 8-bit A/D conversion result register ... 417
ADM: A/D converter mode register ... 412
ADPC: A/D port configuration register ... 219, 419
ADS: Analog input channel specification register ... 418
ADTC0: Automatic data transfer address count register 0 ... 523
ADTI0: Automatic data transfer interval specification register 0 ... 522
ADTP0: Automatic data transfer address point specification register 0 ... 521
ASICL6: Asynchronous serial interface control register 6 ... 466
ASIF6: Asynchronous serial interface transmission status register 6 ... 463
ASIM0: Asynchronous serial interface operation mode register 0 ... 436
ASIM6: Asynchronous serial interface operation mode register 6 ... 460
ASIS0: Asynchronous serial interface reception error status register 0 ... 438
ASIS6: Asynchronous serial interface reception error status register 6 ... 462

[B]

BANK: Memory Bank Select Register ... 150
BRGC0: Baud rate generator control register 0 ... 439
BRGC6: Baud rate generator control register 6 ... 465
BRGCA0: Divisor selection register 0 ... 520

[C]

CKS: Clock output selection register ... 404
CKSR6: Clock selection register 6 ... 463
CMP00: 8-bit timer H compare register 00 ... 366
CMP01: 8-bit timer H compare register 01 ... 366
CMP10: 8-bit timer H compare register 10 ... 366
CMP11: 8-bit timer H compare register 11 ... 366
CR000: 16-bit timer capture/compare register 000 ... 273
CR001: 16-bit timer capture/compare register 000 ... 273
CR010: 16-bit timer capture/compare register 010 ... 273
CR011: 16-bit timer capture/compare register 011 ... 273
CR50: 8-bit timer compare register 50 ... 347
CR51: 8-bit timer compare register 51 ... 347
CRC00: Capture/compare control register 00 ... 280
CRC01: Capture/compare control register 01 ... 280
CSIC10: Serial clock selection register 10 ... 495
CSIC11: Serial clock selection register 11 ... 495
CSIM10: Serial operation mode register 10 ... 493
CSIM11: Serial operation mode register 11 ... 493
CSIMA0: Serial operation mode specification register 0 ... 515
CSIS0: Serial status register 0 ... 517
CSIT0: Serial trigger register 0 ... 519

[D]

DMUC0: Multiplier/divider control register 0 625

[E]

EGN: External interrupt falling edge enable register 652
EGP: External interrupt rising edge enable register 652

[I]

IF0H: Interrupt request flag register 0H 637
IF0L: Interrupt request flag register 0L 637
IF1H: Interrupt request flag register 1H 637
IF1L: Interrupt request flag register 1L 637
IIC0: IIC shift register 0 553
IICC0: IIC control register 0 556
IICCL0: IIC clock selection register 0 565
IICF0: IIC flag register 0 563
IICS0: IIC status register 0 561
IICX0: IIC function expansion register 0 566
IMS: Internal memory size switching register 721
ISC: Input switch control register 468
IXS: Internal expansion RAM size switching register 722

[K]

KRM: Key return mode register 665

[L]

LVIM: Low-voltage detection register 699
LVIS: Low-voltage detection level selection register 701

[M]

MCM: Main clock mode register 237
MDA0H: Multiplication/division data register A0 623
MDA0L: Multiplication/division data register A0 623
MDB0: Multiplication/division data register B0 624
MK0H: Interrupt mask flag register 0H 643
MK0L: Interrupt mask flag register 0L 643
MK1H: Interrupt mask flag register 1H 643
MK1L: Interrupt mask flag register 1L 643
MOC: Main OSC control register 236

[O]

OSCCTL: Clock operation mode select register 229
OSTC: Oscillation stabilization time counter status register 238, 667
OSTS: Oscillation stabilization time select register 239, 668

[P]

P0: Port register 0 210
P1: Port register 1 210
P2: Port register 2 210
P3: Port register 3 210
P4: Port register 4 210

P5: Port register 5 210
P6: Port register 6 210
P7: Port register 7 210
P12: Port register 12 210
P13: Port register 13 210
P14: Port register 14 210
PCC: Processor clock control register 232
PM0: Port mode register 0 ..... 205, 288, 498
PM1: Port mode register 1 ..... 205, 353, 372, 440, 468, 498
PM2: Port mode register 2 ..... 205, 420
PM3: Port mode register 3 ..... 205, 353
PM4: Port mode register 4 205
PM5: Port mode register 5 205
PM6: Port mode register 6 ..... 205, 568
PM7: Port mode register 7 205
PM12: Port mode register 12 ..... 205, 702
PM14: Port mode register 14 ..... 205, 407, 523
PR0H: Priority specification flag register 0H 648
PR0L: Priority specification flag register 0L 648
PR1H: Priority specification flag register 1H 648
PR1L: Priority specification flag register 1L 648
PRM00: Prescaler mode register 00 285
PRM01: Prescaler mode register 01 285
PU0: Pull-up resistor option register 0 215
PU1: Pull-up resistor option register 1 215
PU3: Pull-up resistor option register 3 215
PU4: Pull-up resistor option register 4 215
PU5: Pull-up resistor option register 5 215
PU6: Pull-up resistor option register 6 215
PU7: Pull-up resistor option register 7 215
PU12: Pull-up resistor option register 12 215
PU14: Pull-up resistor option register 14 215

[R]

RCM: Internal oscillation mode register 235
RESF: Reset control flag register 691
RXB0: Receive buffer register 0 435
RXB6: Receive buffer register 6 459
RXS0: Receive shift register 0 435
RXS6: Receive shift register 6 459

[S]

SDR0: Remainder data register 0 623
SIO10: Serial I/O shift register 10 492
SIO11: Serial I/O shift register 11 492
SIOA0: Serial I/O shift register 0 515
SOTB10: Transmit buffer register 10 492

SOTB11: Transmit buffer register 11 ... 492
SVA0: Slave address register 0 ... 553

[T]

TCL50: Timer clock selection register 50 ... 348
TCL51: Timer clock selection register 51 ... 348
TM00: 16-bit timer counter 00 ... 272
TM01: 16-bit timer counter 01 ... 272
TM50: 8-bit timer counter 50 ... 347
TM51: 8-bit timer counter 51 ... 347
TMC00: 16-bit timer mode control register 00 ... 277
TMC01: 16-bit timer mode control register 01 ... 277
TMC50: 8-bit timer mode control register 50 ... 351
TMC51: 8-bit timer mode control register 51 ... 351
TMCYC1: 8-bit timer H carrier control register 1 ... 371
TMHMD0: 8-bit timer H mode register 0 ... 367
TMHMD1: 8-bit timer H mode register 1 ... 367
TOC00: 16-bit timer output control register 00 ... 282
TOC01: 16-bit timer output control register 01 ... 282
TXB6: Transmit buffer register 6 ... 459
TXS0: Transmit shift register 0 ... 435
TXS6: Transmit shift register 6 ... 459

[W]

WDTE: Watchdog timer enable register ... 398
WTM: Watch timer operation mode register ... 391

APPENDIX D LIST OF CAUTIONS

This appendix lists cautions described in this document.
"Classification (hard/soft)" in table is as follows.

Hard: Cautions for microcontroller internal/external hardware
Soft: Cautions for software such as register settings or programs

(1/30)

Chapter	Classification	Function	Details of Function	Cautions	Page
Chapter 1	Hard	Pin function	AV_{SS}	Make AV_{SS} the same potential as V_{SS}.	pp. 42, 44 to 47 ☐
			AV_{SS}, EV_{SS}	Make AV_{SS} and EV_{SS} the same potential as V_{SS}.	pp. 43, 48 to 50 ☐
			EV_{DD}	Make EV_{DD} the same potential as V_{DD}.	pp. 43, 48 to 50 ☐
			REGC	Connect the REGC pin to V_{SS} via a capacitor (0.47 to 1 μF).	pp. 42 to 50 ☐
			ANI0/P20 to ANIn/P2n	ANI0/P20 to ANIn/P2n are set in the analog input mode after release of reset.	pp. 42 to 50 ☐
Chapter 2	Hard	Pin function	ANI0/P20 to ANI7/P27	ANI0/P20 to ANI7/P27 are set in the analog input mode after release of reset.	p. 81 ☐
			P31/INTP2/ OCD1A	In the product with an on-chip debug function (μPD78F05xxD and 78F05xxDA), be sure to pull the P31/INTP2/OCD1A pin down before a reset, release to prevent malfunction.	p. 82 ☐
				Process the P31/INTP2/OCD1A pin of the products mounted with the on-chip debug function (μPD78F05xxD and 78F05xxDA) as follows, when it is not used when it is connected to a flash memory programmer or an on-chip debug emulator (see the table on p.83).	p. 83 ☐
			P121/X1/OCD0A	Process the P121/X1/OCD0A pin of the products mounted with the on-chip debug function (μPD78F05xxD and 78F05xxDA) as follows, when it is not used when it is connected to a flash memory programmer or an on-chip debug emulator (see the table on p.87).	p. 87 ☐
			REGC pin	Keep the wiring length as short as possible for the broken-line part in the above figure.	p. 90 ☐
Chapter 3	Soft	Memory space	IMS, IXS: Internal memory size switching register, internal expansion RAM size switching register	Regardless of the internal memory capacity, the initial values of the internal memory size switching register (IMS) and internal expansion RAM size switching register (IXS) of all products in the 78K0/Kx2 microcontrollers are fixed (IMS = CFH, IXS = 0CH). Therefore, set the value corresponding to each product as indicated below.	p. 96 ☐
				To set the memory size, set IMS and then IXS. Set the memory size so that the internal ROM and internal expansion RAM areas do not overlap.	p. 96 ☐
			Memory bank	Instructions cannot be fetched between different memory banks.	p. 113 ☐
				Branch and access cannot be directly executed between different memory banks. Execute branch or access between different memory banks via the common area.	p. 113 ☐
				Allocate interrupt servicing in the common area.	p. 113 ☐
				An instruction that extends from 7FFFH to 8000H can only be executed in memory bank 0.	p. 113 ☐
			SFR: Special function register	Do not access addresses to which SFRs are not assigned.	p. 116 ☐
			SP: Stack pointer	Since reset signal generation makes the SP contents undefined, be sure to initialize the SP before using the stack.	p. 126 ☐

(2/30)

Chapter	Classification	Function	Details of Function	Cautions	Page
Chapter 4	Soft	Memory bank switching function (products whose flash memory is at least 96 KB only)	BANK: Memory bank select register	Be sure to change the value of the BANK register in the common area (0000H to 7FFFH). If the value of the BANK register is changed in the bank area (8000H to BFFFH), an inadvertent program loop occurs in the CPU. Therefore, never change the value of the BANK register in the bank area.	p. 150 ☐
			Memory bank	Instructions cannot be fetched between different memory banks.	p. 151 ☐
				Branching and accessing cannot be directly executed between different memory banks. Execute branching or accessing between different memory banks via the common area.	p. 151 ☐
				Allocate interrupt servicing in the common area.	p. 151 ☐
				An instruction that extends from 7FFFH to 8000H can only be executed in memory bank 0.	p. 151 ☐
Chapter 5	Soft	Port function	P02/SO11, P04/$\overline{\text{SCK11}}$	To use P02/SO11 and P04/$\overline{\text{SCK11}}$ as general-purpose ports, set serial operation mode register 11 (CSIM11) and serial clock selection register 11 (CSIC11) to the default status (00H).	p. 164 ☐
			P10/$\overline{\text{SCK10}}$/TxD0, P12/SO10	To use P10/$\overline{\text{SCK10}}$/TxD0 and P12/SO10 as general-purpose ports, set serial operation mode register 10 (CSIM10) and serial clock selection register 10 (CSIC10) to the default status (00H)	p. 175 ☐
			P13/TxD6	To use P13/TxD6 as general-purpose port, clear bit 0 (TXDLV6) of synchronous serial interface control register 6 (ASICL6) to 0 (normal output of TxD6).	p. 175 ☐
	Hard		Port 2	Make the AV_{REF} pin the same potential as the V_{DD} pin when port 2 is used as a digital port.	p. 181 ☐
	Soft			For the 38-pin products of 78K0/KC2, be sure to set bits 6 and 7 of PM2 to “1”, and bits 6 and 7 of P2 to “0”.	p. 182 ☐
	Hard		P31/INTP2/ OCD1A	In the product with an on-chip debug function (μPD78F05xxD and 78F05xxDA), be sure to pull the P31/INTP2/OCD1A pin down before a reset release, to prevent malfunction.	p. 183 ☐
				Process the P31/INTP2/OCD1A pin of the products mounted with the on-chip debug function (μPD78F05xxD and 78F05xxDA) as follows, when it is not used when it is connected to a flash memory programmer or an on-chip debug emulator (see the table on p.183).	p. 183 ☐
	Soft		Port 4	For the 38-pin products of 78K0/KC2, be sure to set bits 0 and 1 of PM4 and P4 to “0”.	p. 187 ☐
	Hard		P60, P61	A through current flows through P60 and P61 if an intermediate potential is input to these pins, because the input buffer is also turned on when P60 and P61 are in output mode. Consequently, do not input an intermediate potential when P60 and P61 are in output mode.	p. 190 ☐
			P62	A through current flows through P62 if an intermediate potential is input to this pin, because the input buffer is also turned on when P62 is in output mode. Consequently, do not input an intermediate potential when P62 is in output mode.	p. 191 ☐
	Soft		Port 7	For the 38-pin products of 78K0/KC2, be sure to set bits 2 and 3 of PM7 and P7 to “0”.	p. 195 ☐

(3/30)

Chapter	Classification	Function	Details of Function	Cautions	Page
Chapter 5	Soft	Port function	P121/X1/OCD0A, P122/X2/EXCLK/OCD0B, P123/XT1, P124/XT2/EXCLKS	When using the P121 to P124 pins to connect a resonator for the main system clock (X1, X2) or subsystem clock (XT1, XT2), or to input an external clock for the main system clock (EXCLK) or subsystem clock (EXCLKS), the X1 oscillation mode, XT1 oscillation mode, or external clock input mode must be set by using the clock operation mode select register (OSCCTL) (for details, see 6.3 (1) Clock operation mode select register (OSCCTL) and (3) Setting of operation mode for subsystem clock pin). The reset value of OSCCTL is 00H (all of the P121 to P124 pins are I/O port pins). At this time, setting of the PM121 to PM124 and P121 to P124 pins is not necessary.	p. 196 ☐
				Process the P121/X1/OCD0A pin of the products mounted with the on-chip debug function (μPD78F05xxD and 78F05xxDA) as follows, when it is not used when it is connected to a flash memory programmer or an on-chip debug emulator (see the table on p.197).	p. 197 ☐
			Port mode registers	Be sure to set bits 2 to 7 of PM0, bits 4 to 7 of PM2, bits 4 to 7 of PM3, bits 2 to 7 of PM6, bits 3 to 7 of PM12 to 1. (78K0/KB2)	p. 205 ☐
				For the 38-pin products, be sure to set bits 2 to 7 of PM0, bits 6 and 7 of PM2, bits 4 to 7 of PM3, bits 2 to 7 of PM4, bits 4 to 7 of PM6, bits 4 to 7 of PM7, and bits 5 to 7 of PM12 to “1”. Also, be sure to set bits 0 and 1 of PM4, and bits 2 and 3 of PM7 to “0”. For the 44-pin products, be sure to set bits 2 to 7 of PM0, bits 4 to 7 of PM3, bits 2 to 7 of PM4, bits 4 to 7 of PM6, bits 4 to 7 of PM7, and bits 5 to 7 of PM12 to “1”. For the 48-pin products, be sure to set bits 2 to 7 of PM0, bits 4 to 7 of PM3, bits 2 to 7 of PM4, bits 4 to 7 of PM6, bits 6 and 7 of PM7, bits 5 to 7 of PM12, and bits 1 to 7 of PM14 to “1”. (78K0/KC2)	p. 206 ☐
				Be sure to set bits 4 to 7 of PM0, bits 4 to 7 of PM3, bits 2 to 7 of PM4, bits 4 to 7 of PM6, bits 5 to 7 of PM12, and bits 1 to 7 of PM14 to 1. (78K0/KD2)	p. 207 ☐
				Be sure to set bit 7 of PM0, bits 4 to 7 of PM3, bits 4 to 7 of PM4, bits 4 to 7 of PM5, bits 4 to 7 of PM6, bits 5 to 7 of PM12, and bits 2 to 7 of PM14 to “1”. (78K0/KE2)	p. 208 ☐
				Be sure to set bit 7 of PM0, bits 4 to 7 of PM3, bits 5 to 7 of PM12, and bits 6 and 7 of PM14 to “1”. (78K0/KF2)	p. 209 ☐
			Port register (78K0/KC2)	For the 38-pin products, be sure to set bits 6 and 7 of P2, bits 0 and 1 of P4, and bits 2 and 3 of P7 to “0”.	p. 211 ☐
			ADPC: A/D port configuration register	Set the channel used for A/D conversion to the input mode by using port mode register 2 (PM2).	p. 220 ☐
				If data is written to ADPC, a wait cycle is generated. Do not write data to ADPC when the peripheral hardware clock is stopped. For details, see CHAPTER 36 CAUTIONS FOR WAIT.	p. 220 ☐
			1-bit manipulation instruction for port register n (Pn)	When a 1-bit manipulation instruction is executed on a port that provides both input and output functions, the output latch value of an input port that is not subject to manipulation may be written in addition to the targeted bit. Therefore, it is recommended to rewrite the output latch when switching a port from input mode to output mode.	p. 224 ☐
Chapter 6	Soft	Clock generator	OSCCTL: Clock operation mode select register	Be sure to set AMPH to 1 if the high-speed system clock oscillation frequency exceeds 10 MHz.	pp. 230, 231 ☐
				Set AMPH before setting the main clock mode register (MCM).	pp. 230, 231 ☐

(4/30)

Chapter	Classification	Function	Details of Function	Cautions	Page
Chapter 6	Soft	Clock generator	OSCCTL: Clock operation mode select register	Set AMPH before setting the peripheral functions after a reset release. The value of AMPH can be changed only once after a reset release. When the high-speed system clock (X1 oscillation) is selected as the CPU clock, supply of the CPU clock is stopped for 4.06 to 16.12 μs after AMPH is set to 1. When the high-speed system clock (external clock input) is selected as the CPU clock, supply of the CPU clock is stopped for the duration of 160 external clocks after AMPH is set to 1.	pp. 230, 231 ☐
				If the STOP instruction is executed when AMPH = 1, supply of the CPU clock is stopped for 4.06 to 16.12 μs after the STOP mode is released when the internal high-speed oscillation clock is selected as the CPU clock, or for the duration of 160 external clocks when the high-speed system clock (external clock input) is selected as the CPU clock. When the high-speed system clock (X1 oscillation) is selected as the CPU clock, the oscillation stabilization time is counted after the STOP mode is released.	pp. 230, 231 ☐
				To change the value of EXCLK and OSCSEL, be sure to confirm that bit 7 (MSTOP) of the main OSC control register (MOC) is 1 (the X1 oscillator stops or the external clock from the EXCLK pin is disabled).	pp. 230, 231 ☐
				Be sure to clear bits 1 to 5 to 0. (78K0/KB2)	pp. 230, 231 ☐
			PCC: Processor clock control register	Be sure to clear bits 1 to 3 to 0. (78K0/KC2 to 78K0/KF2)	p. 232 ☐
				Be sure to clear bits 3 and 7 to “0”. (78K0/KC2 to 78K0/KF2)	p. 233 ☐
				The peripheral hardware clock (f_{PRS}) is not divided when the division ratio of the PCC is set.	pp. 232, 233 ☐
				Confirm that bit 5 (CLS) of the processor clock control register (PCC) is 0 (CPU is operating with main system clock) when changing the current values of XTSTART, EXCLKS, and OSCSELS.	p. 234 ☐
			RCM: Internal oscillation mode register	When setting RSTOP to 1, be sure to confirm that the CPU operates with a clock other than the internal high-speed oscillation clock. Specifically, set under either of the following conditions. <1> 78K0/KB2 • When MCS = 1 (when CPU operates with the high-speed system clock) <2> 78K0/KC2, 78K0/KD2, 78K0/KE2, and 78K0/KF2 • When MCS = 1 (when CPU operates with the high-speed system clock) • When CLS = 1 (when CPU operates with the subsystem clock) In addition, stop peripheral hardware that is operating on the internal high-speed oscillation clock before setting RSTOP to 1.	p. 235 ☐
			MOC: Main OSC control register	When setting MSTOP to 1, be sure to confirm that the CPU operates with a clock other than the high-speed system clock. Specifically, set under either of the following conditions. <1> 78K0/KB2 • When MCS = 0 (when CPU operates with the internal high-speed oscillation clock) <2> 78K0/KC2, 78K0/KD2, 78K0/KE2, and 78K0/KF2 • When MCS = 0 (when CPU operates with the internal high-speed oscillation clock) • When CLS = 1 (when CPU operates with the subsystem clock) In addition, stop peripheral hardware that is operating on the high-speed system clock before setting MSTOP to 1.	p. 236 ☐
				Do not clear MSTOP to 0 while bit 6 (OSCSEL) of the clock operation mode select register (OSCCTL) is 0 (I/O port mode).	p. 236 ☐
				The peripheral hardware cannot operate when the peripheral hardware clock is stopped. To resume the operation of the peripheral hardware after the peripheral hardware clock has been stopped, initialize the peripheral hardware.	p. 236 ☐

(5/30)

Chapter	Classification	Function	Details of Function	Cautions	Page
Chapter 6	Soft	Clock generator	MCM: Main clock mode register	XSEL can be changed only once after a reset release.	p. 237 ☐
				Do not rewrite MCM0 when the CPU clock operates with the subsystem clock.	p. 237 ☐
	Hard			A clock other than f_{PRS} is supplied to the following peripheral functions regardless of the setting of XSEL and MCM0. • Watchdog timer (operates with internal low-speed oscillation clock) • When "f_{RL}", "$f_{RL}/2^7$", or "$f_{RL}/2^9$" is selected as the count clock for 8-bit timer H1 (operates with internal low-speed oscillation clock) • Peripheral hardware selects the external clock as the clock source (Except when the external count clock of TM0n (n = 0, 1) is selected (TI00n pin valid edge))	p. 237 ☐
	Soft		OSTC: Oscillation stabilization time counter status register	After the above time has elapsed, the bits are set to 1 in order from MOST11 and remain 1.	p. 238 ☐
				The oscillation stabilization time counter counts up to the oscillation stabilization time set by OSTS. If the STOP mode is entered and then released while the internal high-speed oscillation clock is being used as the CPU clock, set the oscillation stabilization time as follows. • Desired OSTC oscillation stabilization time ≤ Oscillation stabilization time set by OSTS Note, therefore, that only the status up to the oscillation stabilization time set by OSTS is set to OSTC after STOP mode is released.	p. 238 ☐
	Hard			The X1 clock oscillation stabilization wait time does not include the time until clock oscillation starts ("a" below).	p. 238 ☐
	Soft		OSTS: Oscillation stabilization time select register	To set the STOP mode when the X1 clock is used as the CPU clock, set OSTS before executing the STOP instruction.	p. 239 ☐
				Do not change the value of the OSTS register during the X1 clock oscillation stabilization time.	p. 239 ☐
				The oscillation stabilization time counter counts up to the oscillation stabilization time set by OSTS. If the STOP mode is entered and then released while the internal high-speed oscillation clock is being used as the CPU clock, set the oscillation stabilization time as follows. • Desired OSTC oscillation stabilization time ≤ Oscillation stabilization time set by OSTS Note, therefore, that only the status up to the oscillation stabilization time set by OSTS is set to OSTC after STOP mode is released.	p. 239 ☐
	Hard			The X1 clock oscillation stabilization wait time does not include the time until clock oscillation starts ("a" below).	p. 239 ☐
		X1/XT1 oscillator	–	When using the X1 oscillator and XT1 oscillator, wire as follows in the area enclosed by the broken lines in the Figures 6-12 and 6-13 to avoid an adverse effect from wiring capacitance. • Keep the wiring length as short as possible. • Do not cross the wiring with the other signal lines. Do not route the wiring near a signal line through which a high fluctuating current flows. • Always make the ground point of the oscillator capacitor the same potential as V_{SS}. Do not ground the capacitor to a ground pattern through which a high current flows. • Do not fetch signals from the oscillator. Note that the XT1 oscillator is designed as a low-amplitude circuit for reducing power consumption.	p. 241 ☐
				When X2 and XT1 are wired in parallel, the crosstalk noise of X2 may increase with XT1, resulting in malfunctioning.	p. 242 ☐

(6/30)

Chapter	Classification	Function	Details of Function	Cautions	Page
Chapter 6	Hard	Clock generator operation when power supply voltage is turned on	–	It is not necessary to wait for the oscillation stabilization time when an external clock input from the EXCLK and EXCLKS pins is used.	pp. 246, 247 ☐
				A voltage oscillation stabilization time of 1.93 to 5.39 ms is required after the power supply voltage reaches 1.59 V (TYP.). If the supply voltage rises from 1.59 V (TYP.) to 2.7 V (TYP.) within 1.93 ms, the power supply oscillation stabilization time of 0 to 5.39 ms is automatically generated before reset processing.	p. 247 ☐
	Soft	Controlling high-speed system clock	X1/P121 and X2/EXCLK/P122	The X1/P121 and X2/EXCLK/P122 pins are in the I/O port mode after a reset release.	p. 248 ☐
			X1 clock	Do not change the value of EXCLK and OSCSEL while the X1 clock is operating.	p. 249 ☐
				Set the X1 clock after the supply voltage has reached the operable voltage of the clock to be used (see CHAPTER 30 ELECTRICAL SPECIFICATIONS (STANDARD PRODUCTS) to CHAPTER 33 ELECTRICAL SPECIFICATIONS ((A2) GRADE PRODUCTS : T_A = • 40 to +125°C)).	p. 249 ☐
			External main system clock	Do not change the value of EXCLK and OSCSEL while the external main systerm clock is operating.	p. 249 ☐
				Set the external main system clock after the supply voltage has reached the operable voltage of the clock to be used (see CHAPTER 30 ELECTRICAL SPECIFICATIONS (STANDARD PRODUCTS) to CHAPTER 33 ELECTRICAL SPECIFICATIONS ((A2) GRADE PRODUCTS : T_A = • 40 to +125°C)).	p. 249 ☐
			Main system clock	If the high-speed system clock is selected as the main system clock, a clock other than the high-speed system clock cannot be set as the peripheral hardware clock.	p. 250 ☐
			High-speed system clock	Be sure to confirm that MCS = 0 or CLS = 1 when setting MSTOP to 1. In addition, stop peripheral hardware that is operating on the high-speed system clock.	p. 251 ☐
			Internal high-speed oscillation clock	Be sure to confirm that MCS = 1 or CLS = 1 when setting RSTOP to 1. In addition, stop peripheral hardware that is operating on the internal high-speed oscillation clock.	p. 253 ☐
			XT1/P123, XT2/EXCLKS/ P124	The XT1/P123 and XT2/EXCLKS/P124 pins are in the I/O port mode after a reset release.	p. 254 ☐
			External clock from peripheral hardware pins	Do not start the peripheral hardware operation with the external clock from peripheral hardware pins when the internal high-speed oscillation clock and high-speed system clock are stopped while the CPU operates with the subsystem clock, or when in the STOP mode.	p. 254 ☐
			XT1 clock, external subsystem clock	Do not change the value of XTSTART, EXCLKS, and OSCSELS while the subsystem clock is operating.	p. 254 ☐
			Subsystem clock	Be sure to confirm that CLS = 0 when clearing OSCSELS to 0. In addition, stop the watch timer if it is operating on the subsystem clock.	p. 255 ☐
				The subsystem clock oscillation cannot be stopped using the STOP instruction.	p. 255 ☐
		Controlling internal low-speed oscillation clock	Internal low-speed oscillation clock	If “Internal low-speed oscillator cannot be stopped” is selected by the option byte, oscillation of the internal low-speed oscillation clock cannot be controlled.	p. 256 ☐

(7/30)

Chapter	Classification	Function	Details of Function	Cautions	Page
Chapter 6	Soft	CPU clock	–	Set the clock after the supply voltage has reached the operable voltage of the clock to be set (see CHAPTER 30 ELECTRICAL SPECIFICATIONS (STANDARD PRODUCTS) to CHAPTER 33 ELECTRICAL SPECIFICATIONS ((A2) GRADE PRODUCTS : T_A = • 40 to +125°C)).	pp. 260, 261, 263 ☐
				Selection of the main system clock cycle division factor (PCC0 to PCC2) and switchover from the main system clock to the subsystem clock (changing CSS from 0 to 1) should not be set simultaneously. Simultaneous setting is possible, however, for selection of the main system clock cycle division factor (PCC0 to PCC2) and switchover from the subsystem clock to the main system clock (changing CSS from 1 to 0).	p. 266 ☐
				When switching the internal high-speed oscillation clock to the high-speed system clock, bit 2 (XSEL) of MCM must be set to 1 in advance. The value of XSEL can be changed only once after a reset release.	p. 267 ☐
				Do not rewrite MCM0 when the CPU clock operates with the subsystem clock.	p. 267 ☐
Chapter 7	Hard	16-bit timer/event counters 00, 01	–	The valid edge of TI010 and timer output (TO00) cannot be used for the P01 pin at the same time, and the valid edge of TI011 and timer output (TO01) cannot be used for the P06 pin at the same time. Select either of the functions.	p. 272 ☐
	Soft			If clearing of bits 3 and 2 (TMC0n3 and TMC0n2) of 16-bit timer mode control register 0n (TMC0n) to 00 and input of the capture trigger conflict, then the captured data is undefined.	p. 272 ☐
				To change the mode from the capture mode to the comparison mode, first clear the TMC0n3 and TMC0n2 bits to 00, and then change the setting. A value that has been once captured remains stored in CR00n unless the device is reset. If the mode has been changed to the comparison mode, be sure to set a comparison value.	p. 272 ☐
			TM0n: 16-bit timer counter 0n	Even if TM0n is read, the value is not captured by CR01n.	p. 273 ☐
			CR00n, CR01n: 16-bit timer capture/compare registers 00n, 01n	CR00n does not perform the capture operation when it is set in the comparison mode, even if a capture trigger is input to it.	p. 274 ☐
				CR01n does not perform the capture operation when it is set in the comparison mode, even if a capture trigger is input to it.	p. 274 ☐
				To capture the count value of the TM0n register to the CR00n register by using the phase reverse to that input to the TI00n pin, the interrupt request signal (INTTM00n) is not generated after the value has been captured. If the valid edge is detected on the TI01n pin during this operation, the capture operation is not performed but the INTTM00n signal is generated as an external interrupt signal. To not use the external interrupt, mask the INTTM00n signal.	p. 276 ☐
			TMC0n: 16-bit timer mode control register 0n	16-bit timer/event counter 0n starts operation at the moment TMC0n2 and TMC0n3 are set to values other than 00 (operation stop mode), respectively. Set TMC0n2 and TMC0n3 to 00 to stop the operation.	p. 277 ☐
	Hard		CRC0n: Capture/ compare control register 0n	To ensure that the capture operation is performed properly, the capture trigger requires a pulse two cycles longer than the count clock selected by prescaler mode register 0n (PRM0n).	pp. 280, 281 ☐
	Soft		TOC0n: 16-bit timer output control register 0n	Be sure to set TOC0n using the following procedure. <1> Set TOC0n4 and TOC0n1 to 1. <2> Set only TOE0n to 1. <3> Set either of LVS0n or LVR0n to 1.	p. 282 ☐

(8/30)

Chapter	Classification	Function	Details of Function	Cautions	Page
Chapter 7	Soft	16-bit timer/event counters 00, 01	PRM0n: Prescaler mode register 0n	Do not apply the following setting when setting the PRM0n1 and PRM0n0 bits to 11 (to specify the valid edge of the TI00n pin as a count clock). • Clear & start mode entered by the TI00n pin valid edge • Setting the TI00n pin as a capture trigger	p. 285 ☐
				If the operation of the 16-bit timer/event counter 0n is enabled when the TI00n or TI01n pin is at high level and when the valid edge of the TI00n or TI01n pin is specified to be the rising edge or both edges, the high level of the TI00n or TI01n pin is detected as a rising edge. Note this when the TI00n or TI01n pin is pulled up. However, the rising edge is not detected when the timer operation has been once stopped and then is enabled again.	p. 285 ☐
	Hard			The valid edge of TI010 and timer output (TO00) cannot be used for the P01 pin at the same time, and the valid edge of TI011 and timer output (TO01) cannot be used for the P06 pin at the same time. Select either of the functions.	p. 285 ☐
	Soft		Clear & start mode entered by TI00n pin valid edge input	Do not set the count clock as the valid edge of the TI00n pin (PRM0n1 and PRM0n0 = 11). When PRM0n1 and PRM0n0 = 11, TM0n may be cleared.	p. 299 ☐
			PPG output	To change the duty factor (value of CR01n) during operation, see 7.5.1 Rewriting CR01n during TM0n operation.	p. 321 ☐
				Set values to CR00n and CR01n such that the condition 0000H ≤ CR01n < CR00n ≤ FFFFH is satisfied.	p. 323 ☐
			One-shot pulse output	Do not input the trigger again (setting OSPT0n to 1 or detecting the valid edge of the TI00n pin) while the one-shot pulse is output. To output the one-shot pulse again, generate the trigger after the current one-shot pulse output has completed.	p. 325 ☐
				To use only the setting of OSPT0n to 1 as the trigger of one-shot pulse output, do not change the level of the TI00n pin or its alternate function port pin. Otherwise, the pulse will be unexpectedly output.	p. 325 ☐
				Do not set the same value to CR00n and CR01n.	p. 327 ☐
			LVS0n, LVRn0	Be sure to set LVS0n and LVR0n following steps <1>, <2>, and <3> above. Step <2> can be performed after <1> and before <3>.	p. 339 ☐
			–	Table 7-3 shows the restrictions for each channel.	p. 340 ☐
	Hard		Timer start errors	An error of up to one clock may occur in the time required for a match signal to be generated after timer start. This is because counting TM0n is started asynchronously to the count pulse.	p. 340 ☐
	Soft		CR00n, CR01n: 16-bit timer capture/compare registers 00n, 01n	Set a value other than 0000H to CR00n and CR01n in clear & start mode entered upon a match between TM0n and CR00n (TM0n cannot count one pulse when it is used as an external event counter).	p. 340 ☐
				When the valid edge is input to the TI00n/TI01n pin and the reverse phase of the TI00n pin is detected while CR00n/CR01n is read, CR01n performs a capture operation but the read value of CR00n/CR01n is not guaranteed. At this time, an interrupt signal (INTTM00n/INTTM01n) is generated when the valid edge of the TI00n/TI01n pin is detected (the interrupt signal is not generated when the reverse-phase edge of the TI00n pin is detected). When the count value is captured because the valid edge of the TI00n/TI01n pin was detected, read the value of CR00n/CR01n after INTTM00n/INTTM01n is generated.	p. 341 ☐
				The values of CR00n and CR01n are not guaranteed after 16-bit timer/event counter 0n stops.	p. 341 ☐

(9/30)

Chapter	Classification	Function	Details of Function	Cautions	Page
Chapter 7	Soft	16-bit timer/event counters 00, 01	ES0n0, ES0n1	Set the valid edge of the TI00n pin while the timer operation is stopped (TMC0n3 and TMC0n2 = 00). Set the valid edge by using ES0n0 and ES0n1.	p. 341 ☐
			Re-triggering one-shot pulse	Make sure that the trigger is not generated while an active level is being output in the one-shot pulse output mode. Be sure to input the next trigger after the current active level is output.	p. 341 ☐
			OVF0n	The OVF0n flag is set to 1 in the following case, as well as when TM0n overflows. Select the clear & start mode entered upon a match between TM0n and CR00n. →Set CR00n to FFFFH. →When TM0n matches CR00n and TM0n is cleared from FFFFH to 0000H	p. 342 ☐
				Even if the OVF0n flag is cleared to 0 after TM0n overflows and before the next count clock is counted (before the value of TM0n becomes 0001H), it is set to 1 again and clearing is invalid.	p. 342 ☐
			One-shot pulse output	One-shot pulse output operates correctly in the free-running timer mode or the clear & start mode entered by the TI00n pin valid edge. The one-shot pulse cannot be output in the clear & start mode entered upon a match between TM0n and CR00n.	p. 342 ☐
			TI00n	When the valid edge of TI00n is specified as the count clock, the capture register for which TI00n is specified as a trigger does not operate correctly.	p. 343 ☐
	Hard		TI00n, TI01n	To accurately capture the count value, the pulse input to the TI00n and TI01n pins as a capture trigger must be wider than two count clocks selected by PRM0n (see Figure 7-9).	p. 343 ☐
			INTTM00n, INTTM01n	The capture operation is performed at the falling edge of the count clock but the interrupt signals (INTTM00n and INTTM01n) are generated at the rising edge of the next count clock (see Figure 7-9).	p. 343 ☐
	Soft		CRC0n1 = 1	When the count value of the TM0n register is captured to the CR00n register in the phase reverse to the signal input to the TI00n pin, the interrupt signal (INTTM00n) is not generated after the count value is captured. If the valid edge is detected on the TI01n pin during this operation, the capture operation is not performed but the INTTM00n signal is generated as an external interrupt signal. Mask the INTTM00n signal when the external interrupt is not used.	p. 343 ☐
	Hard		Specifying valid edge after reset	If the operation of the 16-bit timer/event counter 0n is enabled after reset and while the TI00n or TI01n pin is at high level and when the rising edge or both the edges are specified as the valid edge of the TI00n or TI01n pin, then the high level of the TI00n or TI01n pin is detected as the rising edge. Note this when the TI00n or TI01n pin is pulled up. However, the rising edge is not detected when the operation is once stopped and then enabled again.	p. 343 ☐
			Sampling clock for eliminating noise	The sampling clock for eliminating noise differs depending on whether the valid edge of TI00n is used as the count clock or capture trigger. In the former case, the sampling clock is fixed to f_{PRS}. In the latter, the count clock selected by PRM0n is used for sampling. When the signal input to the TI00n pin is sampled and the valid level is detected two times in a row, the valid edge is detected. Therefore, noise having a short pulse width can be eliminated (see Figure 7-9).	p. 343 ☐
			TI00n/TI01n	The signal input to the TI00n/TI01n pin is not acknowledged while the timer is stopped, regardless of the operation mode of the CPU.	p. 343 ☐
			Reading of TM0n	TM0n can be read without stopping the actual counter, because the count values captured to the buffer are fixed when it is read. The buffer, however, may not be updated when it is read immediately before the counter counts up, because the buffer is updated at the timing the counter counts up.	p. 344 ☐
Chapter 8	Soft	8-bit timer/event counters 50, 51	CR5n: 8-bit timer compare register 5n	In the mode in which clear & start occurs on a match of TM5n and CR5n (TMC5n6 = 0), do not write other values to CR5n during operation.	p. 347 ☐
				In PWM mode, make the CR5n rewrite period 3 count clocks of the count clock (clock selected by TCL5n) or more.	p. 347 ☐

(10/30)

Chapter	Classification	Function	Details of Function	Cautions	Page
Chapter 8	Soft	8-bit timer/event counters 50, 51	TCL50: Timer clock selection register 50	When rewriting TCL50 to other data, stop the timer operation beforehand.	p. 349 ☐
				Be sure to clear bits 3 to 7 to “0”.	p. 349 ☐
			TCL51: Timer clock selection register 51	When rewriting TCL51 to other data, stop the timer operation beforehand.	p. 350 ☐
				Be sure to clear bits 3 to 7 to “0”.	p. 350 ☐
			TMC5n: 8-bit timer mode control register 5n (TMC5n)	The settings of LVS5n and LVR5n are valid in other than PWM mode.	p. 352 ☐
				Perform <1> to <4> below in the following order, not at the same time. <1> Set TMC5n1, TMC5n6: Operation mode setting <2> Set TOE5n to enable output: Timer output enable <3> Set LVS5n, LVR5n (see Caution 1): Timer F/F setting <4> Set TCE5n	p. 352 ☐
				When TCE5n = 1, setting the other bits of TMC5n is prohibited.	p. 352 ☐
				The actual TO50/TI50/P17 and TO51/TI51/P33/INTP4 pin outputs are determined depending on PM17 and P17, and PM33 and P33, besides TO5n output.	p. 352 ☐
			Interval timer	Do not write other values to CR5n during operation.	p. 354 ☐
			Square-wave output	Do not write other values to CR5n during operation.	p. 357 ☐
			PWM output	In PWM mode, make the CR5n rewrite period 3 count clocks of the count clock (clock selected by TCL5n) or more.	p. 358 ☐
				When reading from CR5n between <1> and <2> in Figure 8-15, the value read differs from the actual value (read value: M, actual value of CR5n: N).	p. 361 ☐
			Timer start error	An error of up to one clock may occur in the time required for a match signal to be generated after timer start. This is because 8-bit timer counters 50 and 51 (TM50, TM51) are started asynchronously to the count clock.	p. 362 ☐
			Reading of TM5n	TM5n can be read without stopping the actual counter, because the count values captured to the buffer are fixed when it is read. The buffer, however, may not be updated when it is read immediately before the counter counts up, because the buffer is updated at the timing the counter counts up.	p. 362 ☐
Chapter 9	Soft	8-bit timers H0, H1	CMP0n: 8-bit timer H comparer register 0n (CMP0n)	CMP0n cannot be rewritten during timer count operation. CMP0n can be refreshed (the same value is written) during timer count operation.	p. 366 ☐
			CMP1n: 8-bit timer H compare register 1n (CMP1n)	In the PWM output mode and carrier generator mode, be sure to set CMP1n when starting the timer count operation (TMHEn = 1) after the timer count operation was stopped (TMHEn = 0) (be sure to set again even if setting the same value to CMP1n).	p. 366 ☐
			TMHMD0: 8-bit timer H mode register 0	When TMHE0 = 1, setting the other bits of TMHMD0 is prohibited. However, TMHMD0 can be refreshed (the same value is written).	p. 369 ☐
				In the PWM output mode, be sure to set the 8-bit timer H compare register 10 (CMP10) when starting the timer count operation (TMHE0 = 1) after the timer count operation was stopped (TMHE0 = 0) (be sure to set again even if setting the same value to CMP10).	p. 369 ☐
				The actual TOH0/P15 pin output is determined depending on PM15 and P15, besides TOH0 output.	p. 369 ☐
			TMHMD1: 8-bit timer H mode register 1	When TMHE1 = 1, setting the other bits of TMHMD1 is prohibited. However, TMHMD1 can be refreshed (the same value is written).	p. 371 ☐
				In the PWM output mode and carrier generator mode, be sure to set the 8-bit timer H compare register 11 (CMP11) when starting the timer count operation (TMHE1 = 1) after the timer count operation was stopped (TMHE1 = 0) (be sure to set again even if setting the same value to CMP11).	p. 371 ☐
				When the carrier generator mode is used, set so that the count clock frequency of TMH1 becomes more than 6 times the count clock frequency of TM51.	p. 371 ☐
				The actual TOH1/INTP5/P16 pin output is determined depending on PM16 and P16, besides TOH1 output.	p. 371 ☐

(11/30)

Chapter	Classification	Function	Details of Function	Cautions	Page
Chapter 9	Soft	8-bit timers H0, H1	TMCYC1: 8-bit timer H carrier register 1	Do not rewrite RMC1 when TMHE = 1. However, TMCYC1 can be refreshed (the same value is written).	p. 371 ☐
	Hard		PWM output	The set value of the CMP1n register can be changed while the timer counter is operating. However, this takes a duration of three operating clocks (signal selected by the CKSn2 to CKSn0 bits of the TMHMDn register) from when the value of the CMP1n register is changed until the value is transferred to the register.	p. 377 ☐
	Soft			Be sure to set the CMP1n register when starting the timer count operation (TMHEn = 1) after the timer count operation was stopped (TMHEn = 0) (be sure to set again even if setting the same value to the CMP1n register).	p. 377 ☐
				Make sure that the CMP1n register setting value (M) and CMP0n register setting value (N) are within the following range. 00H ≤ CMP1n (M) < CMP0n (N) ≤ FFH	p. 377 ☐
			Carrier generator (8-bit timer H1 only)	Do not rewrite the NRZB1 bit again until at least the second clock after it has been rewritten, or else the transfer from the NRZB1 bit to the NRZ1 bit is not guaranteed.	p. 383 ☐
				When the 8-bit timer/event counter 51 is used in the carrier generator mode, an interrupt is generated at the timing of <1>. When the 8-bit timer/event counter 51 is used in a mode other than the carrier generator mode, the timing of the interrupt generation differs.	p. 383 ☐
				Be sure to set the CMP11 register when starting the timer count operation (TMHE1 = 1) after the timer count operation was stopped (TMHE1 = 0) (be sure to set again even if setting the same value to the CMP11 register).	p. 385 ☐
				Set so that the count clock frequency of TMH1 becomes more than 6 times the count clock frequency of TM51.	p. 385 ☐
				Set the values of the CMP01 and CMP11 registers in a range of 01H to FFH.	p. 385 ☐
				The set value of the CMP11 register can be changed while the timer counter is operating. However, it takes the duration of three operating clocks (signal selected by the CKS12 to CKS10 bits of the TMHMD1 register) since the value of the CMP11 register has been changed until the value is transferred to the register.	p. 385 ☐
				Be sure to set the RMC1 bit before the count operation is started.	p. 385 ☐
Chapter 10	Soft	Watch timer	WTM: Watch timer operation mode register	Do not change the count clock and interval time (by setting bits 4 to 7 (WTM4 to WTM7) of WTM) during watch timer operation.	p. 393 ☐
	Hard		Interrupt request	When operation of the watch timer and 5-bit counter is enabled by the watch timer mode control register (WTM) (by setting bits 0 (WTM0) and 1 (WTM1) of WTM to 1), the interval until the first interrupt request signal (INTWT) is generated after the register is set does not exactly match the specification made with bits 2 and 3 (WTM2, WTM3) of WTM. Subsequently, however, the INTWT signal is generated at the specified intervals.	p. 395 ☐
Chapter 11	Soft	Watchdog timer	WDTE: Watchdog timer enable register	If a value other than ACH is written to WDTE, an internal reset signal is generated. If the source clock to the watchdog timer is stopped, however, an internal reset signal is generated when the source clock to the watchdog timer resumes operation.	p. 398 ☐
				If a 1-bit memory manipulation instruction is executed for WDTE, an internal reset signal is generated. If the source clock to the watchdog timer is stopped, however, an internal reset signal is generated when the source clock to the watchdog timer resumes operation.	p. 398 ☐
				The value read from WDTE is 9AH/1AH (this differs from the written value (ACH)).	p. 398 ☐
			Operation control	The first writing to WDTE after a reset release clears the watchdog timer, if it is made before the overflow time regardless of the timing of the writing, and the watchdog timer starts counting again.	p. 399 ☐
				If the watchdog timer is cleared by writing “ACH” to WDTE, the actual overflow time may be different from the overflow time set by the option byte by up to 2/f_{RL} seconds.	p. 399 ☐

(12/30)

Chapter	Classification	Function	Details of Function	Cautions	Page
Chapter 11	Soft	Watchdog timer	Operation control	The watchdog timer can be cleared immediately before the count value overflows (FFFFH).	p. 399 ☐
				The operation of the watchdog timer in the HALT and STOP modes differs as follows depending on the set value of bit 0 (LSROSC) of the option byte (see Table on p. 402). If LSROSC = 0, the watchdog timer resumes counting after the HALT or STOP mode is released. At this time, the counter is not cleared to 0 but starts counting from the value at which it was stopped. If oscillation of the internal low-speed oscillator is stopped by setting LSRSTOP (bit 1 of the internal oscillation mode register (RCM) = 1) when LSROSC = 0, the watchdog timer stops operating. At this time, the counter is not cleared to 0.	p. 400 ☐
			Setting overflow time of watchdog timer, Setting window open period of watchdog time	The combination of WDCS2 = WDCS1 = WDCS0 = 0 and WINDOW1 = WINDOW0 = 0 is prohibited.	pp. 400, 401 ☐
				The watchdog timer continues its operation during self-programming and EEPROM emulation of the flash memory. During processing, the interrupt acknowledge time is delayed. Set the overflow time and window size taking this delay into consideration.	pp. 400, 401 ☐
			Setting window open period of watchdog timer	Setting WINDOW1 = WINDOW0 = 0 is prohibited when using the watchdog timer at 1.8 V ≤ V_{DD} < 2.7 V.	p. 401 ☐
				The first writing to WDTE after a reset release clears the watchdog timer, if it is made before the overflow time regardless of the timing of the writing, and the watchdog timer starts counting again.	p. 401 ☐
Chapter 12	Soft	Clock output/ buzzer output controller	CKS: clock output select register	Set CCS3 to CCS0 while the clock output operation is stopped (CLOE = 0).	pp. 405, 407 ☐
				Set BCS1 and BCS0 when the buzzer output operation is stopped (BZOE = 0).	p. 407 ☐
Chapter 13	Soft	A/D converter	ADCR: 10-bit A/D conversion register, ADCRH: 8-bit A/D conversion register	When data is read from ADCR and ADCRH, a wait cycle is generated. Do not read data from ADCR and ADCRH when the peripheral hardware clock (f_{PRS}) is stopped. For details, see CHAPTER 36 CAUTIONS FOR WAIT.	p. 411 ☐
			ADM: A/D converter mode register	A/D conversion must be stopped before rewriting bits FR0 to FR2, LV1, and LV0 to values other than the identical data.	p. 413 ☐
				If data is written to ADM, a wait cycle is generated. Do not write data to ADM when the peripheral hardware clock (f_{PRS}) is stopped. For details, see CHAPTER 36 CAUTIONS FOR WAIT.	p. 413 ☐
			A/D conversion timer selection	Set the conversion times with the following conditions. (see pp.414, 415)	pp. 414, 415 ☐
				When rewriting FR2 to FR0, LV1, and LV0 to other than the same data, stop A/D conversion once (ADCS = 0) beforehand.	pp. 414, 415 ☐
				Change LV0 from the default value, when 2.3 V ≤ AV_{REF} < 2.7 V.	pp. 414, 415 ☐
				The above conversion time does not include clock frequency errors. Select conversion time, taking clock frequency errors into consideration.	pp. 414, 415 ☐
			ADCR: 10-bit A/D conversion register	When writing to the A/D converter mode register (ADM), analog input channel specification register (ADS), and A/D port configuration register (ADPC), the contents of ADCR may become undefined. Read the conversion result following conversion completion before writing to ADM, ADS, and ADPC. Using timing other than the above may cause an incorrect conversion result to be read.	p. 416 ☐
				If data is read from ADCR, a wait cycle is generated. Do not read data from ADCR when the peripheral hardware clock (f_{PRS}) is stopped. For details, see CHAPTER 36 CAUTIONS FOR WAIT.	p. 416 ☐

(13/30)

Chapter	Classification	Function	Details of Function	Cautions	Page
Chapter 13	Soft	A/D converter	ADCRH: 8-bit A/D conversion register	When writing to the A/D converter mode register (ADM), analog input channel specification register (ADS), and A/D port configuration register (ADPC), the contents of ADCRH may become undefined. Read the conversion result following conversion completion before writing to ADM, ADS, and ADPC. Using timing other than the above may cause an incorrect conversion result to be read.	p. 417 ☐
				If data is read from ADCRH, a wait cycle is generated. Do not read data from ADCRH when the peripheral hardware clock (f_{PRS}) is stopped. For details, see CHAPTER 36 CAUTIONS FOR WAIT.	p. 417 ☐
			ADS: Analog input channel specification register	Be sure to clear bits 3 to 7 to “0”.	p. 418 ☐
				If data is written to ADS, a wait cycle is generated. Do not write data to ADS when the peripheral hardware clock (f_{PRS}) is stopped. For details, see CHAPTER 36 CAUTIONS FOR WAIT.	p. 418 ☐
			ADS: Analog input channel specification register, ADPC: A/D port configuration register (ADPC)	Set a channel to be used for A/D conversion in the input mode by using port mode register 2 (PM2).	pp. 418, 419 ☐
			ADPC: A/D port configuration register (ADPC)	If data is written to ADPC, a wait cycle is generated. Do not write data to ADPC when the peripheral hardware clock (f_{PRS}) is stopped. For details, see CHAPTER 36 CAUTIONS FOR WAIT.	p. 419 ☐
			Port mode register 2 (PM2)	For the 38-pin products of 78K0/KC2, be sure to set bits 6 and 7 of PM2 to “1”, and bits 6 and 7 of P2 to “0”.	p. 420 ☐
			Basic operations of A/D converter	Make sure the period of <1> to <5> is 1 μs or more.	p. 421 ☐
			A/D conversion operation	Make sure the period of <1> to <5> is 1 μs or more.	p. 425 ☐
				<1> may be done between <2> and <4>.	p. 425 ☐
				<1> can be omitted. However, ignore data of the first conversion after <5> in this case.	p. 425 ☐
				The period from <6> to <9> differs from the conversion time set using bits 5 to 1 (FR2 to FR0, LV1, LV0) of ADM. The period from <8> to <9> is the conversion time set using FR2 to FR0, LV1, and LV0.	p. 425 ☐
			Operating current in STOP mode	The A/D converter stops operating in the STOP mode. At this time, the operating current can be reduced by clearing bit 7 (ADCS) and bit 0 (ADCE) of the A/D converter mode register (ADM) to 0. To restart from the standby status, clear bit 0 (ADIF) of interrupt request flag register 1L (IF1L) to 0 and start operation.	p. 428 ☐
	Hard		Input range of ANI0 to ANI7	Observe the rated range of the ANI0 to ANI7 input voltage. If a voltage of AV_{REF} or higher and AV_{SS} or lower (even in the range of absolute maximum ratings) is input to an analog input channel, the converted value of that channel becomes undefined. In addition, the converted values of the other channels may also be affected.	p. 428 ☐
	Soft		Conflicting operations	If conflict occurs between A/D conversion result register (ADCR, ADCRH) write and ADCR or ADCRH read by instruction upon the end of conversion, ADCR or ADCRH read has priority. After the read operation, the new conversion result is written to ADCR or ADCRH.	p. 428 ☐
				If conflict occurs between ADCR or ADCRH write and A/D converter mode register (ADM) write, analog input channel specification register (ADS), or A/D port configuration register (ADPC) write upon the end of conversion, ADM, ADS, or ADPC write has priority. ADCR or ADCRH write is not performed, nor is the conversion end interrupt signal (INTAD) generated.	p. 428 ☐

(14/30)

Chapter	Classification	Function	Details of Function	Cautions	Page
Chapter 13	Hard	A/D converter	Noise countermeasures	To maintain the 10-bit resolution, attention must be paid to noise input to the AV_{REF} pin and pins ANI0 to ANI7. • Connect a capacitor with a low equivalent resistance and a good frequency response to the power supply. • The higher the output impedance of the analog input source, the greater the influence. To reduce the noise, connecting external C as shown in Figure 13-20 is recommended. • Do not switch these pins with other pins during conversion. • The accuracy is improved if the HALT mode is set immediately after the start of conversion.	p. 428 ☐
			ANI0/P20 to ANI7/P27	The analog input pins (ANI0 to ANI7) are also used as input port pins (P20 to P27). When A/D conversion is performed with any of ANI0 to ANI7 selected, do not access P20 to P27 while conversion is in progress; otherwise the conversion resolution may be degraded. It is recommended to select pins used as P20 to P27 starting with the ANI0/P20 that is the furthest from AV_{REF}.	p. 429 ☐
				If a digital pulse is applied to the pins adjacent to the pins currently used for A/D conversion, the expected value of the A/D conversion may not be obtained due to coupling noise. Therefore, do not apply a pulse to the pins adjacent to the pin undergoing A/D conversion.	p. 429 ☐
			Input impedance of ANI0 to ANI7 pins	This A/D converter charges a sampling capacitor for sampling during sampling time. Therefore, only a leakage current flows when sampling is not in progress, and a current that charges the capacitor flows during sampling. Consequently, the input impedance fluctuates depending on whether sampling is in progress, and on the other states. To make sure that sampling is effective, however, it is recommended to keep the output impedance of the analog input source to within 10 kΩ, and to connect a capacitor of about 100 pF to the ANI0 to ANI7 pins (see Figure 13-20).	p. 429 ☐
			AV_{REF} pin input impedance	A series resistor string of several tens of kΩ is connected between the AV_{REF} and AV_{SS} pins. Therefore, if the output impedance of the reference voltage source is high, this will result in a series connection to the series resistor string between the AV_{REF} and AV_{SS} pins, resulting in a large reference voltage error.	p. 429 ☐
	Soft		Interrupt request flag (ADIF)	The interrupt request flag (ADIF) is not cleared even if the analog input channel specification register (ADS) is changed. Therefore, if an analog input pin is changed during A/D conversion, the A/D conversion result and ADIF for the pre-change analog input may be set just before the ADS rewrite. Caution is therefore required since, at this time, when ADIF is read immediately after the ADS rewrite, ADIF is set despite the fact A/D conversion for the post-change analog input has not ended. When A/D conversion is stopped and then resumed, clear ADIF before the A/D conversion operation is resumed.	p. 430 ☐
			Conversion results just after A/D conversion start	The first A/D conversion value immediately after A/D conversion starts may not fall within the rating range if the ADCS bit is set to 1 within 1 μs after the ADCE bit was set to 1, or if the ADCS bit is set to 1 with the ADCE bit = 0. Take measures such as polling the A/D conversion end interrupt request (INTAD) and removing the first conversion result.	p. 430 ☐
			A/D conversion result register (ADCR, ADCRH) read operation	When a write operation is performed to the A/D converter mode register (ADM), analog input channel specification register (ADS), and A/D port configuration register (ADPC), the contents of ADCR and ADCRH may become undefined. Read the conversion result following conversion completion before writing to ADM, ADS, and ADPC. Using a timing other than the above may cause an incorrect conversion result to be read.	p. 430 ☐
			Internal equivalent circuit	The equivalent circuit of the analog input block is shown below. (see Figure 13-22)	p. 431 ☐

(15/30)

Chapter	Classification	Function	Details of Function	Cautions	Page
Chapter 14	Soft	Serial interface UART0	UART mode	If clock supply to serial interface UART0 is not stopped (e.g., in the HALT mode), normal operation continues. If clock supply to serial interface UART0 is stopped (e.g., in the STOP mode), each register stops operating, and holds the value immediately before clock supply was stopped. The TxD0 pin also holds the value immediately before clock supply was stopped and outputs it. However, the operation is not guaranteed after clock supply is resumed. Therefore, reset the circuit so that POWER0 = 0, RXE0 = 0, and TXE0 = 0.	p. 432 ☐
				Set POWER0 = 1 and then set TXE0 = 1 (transmission) or RXE0 = 1 (reception) to start communication.	p. 432 ☐
				TXE0 and RXE0 are synchronized by the base clock (f_{XCLK0}) set by BRGC0. To enable transmission or reception again, set TXE0 or RXE0 to 1 at least two clocks of base clock after TXE0 or RXE0 has been cleared to 0. If TXE0 or RXE0 is set within two clocks of base clock, the transmission circuit or reception circuit may not be initialized.	p. 432 ☐
				Set transmit data to TXS0 at least one base clock (f_{XCLK0}) after setting TXE0 = 1.	pp. 432, 435 ☐
			TXS0: Transmit shift register 0	Do not write the next transmit data to TXS0 before the transmission completion interrupt signal (INTST0) is generated.	p. 435 ☐
			ASIM0: Asynchronous serial interface operation mode register 0	To start the transmission, set POWER0 to 1 and then set TXE0 to 1. To stop the transmission, clear TXE0 to 0, and then clear POWER0 to 0.	p. 437 ☐
				To start the reception, set POWER0 to 1 and then set RXE0 to 1. To stop the reception, clear RXE0 to 0, and then clear POWER0 to 0.	p. 437 ☐
				Set POWER0 to 1 and then set RXE0 to 1 while a high level is input to the RxD0 pin. If POWER0 is set to 1 and RXE0 is set to 1 while a low level is input, reception is started.	p. 437 ☐
				TXE0 and RXE0 are synchronized by the base clock (f_{XCLK0}) set by BRGC0. To enable transmission or reception again, set TXE0 or RXE0 to 1 at least two clocks of base clock after TXE0 or RXE0 has been cleared to 0. If TXE0 or RXE0 is set within two clocks of base clock, the transmission circuit or reception circuit may not be initialized.	p. 437 ☐
				Set transmit data to TXS0 at least one base clock (f_{XCLK0}) after setting TXE0 = 1.	p. 437 ☐
				Clear the TXE0 and RXE0 bits to 0 before rewriting the PS01, PS00, and CL0 bits.	p. 437 ☐
				Make sure that TXE0 = 0 when rewriting the SL0 bit. Reception is always performed with “number of stop bits = 1”, and therefore, is not affected by the set value of the SL0 bit.	p. 437 ☐
				Be sure to set bit 0 to 1.	p. 437 ☐
			ASIS0: Asynchronous serial interface reception error status register 0	The operation of the PE0 bit differs depending on the set values of the PS01 and PS00 bits of asynchronous serial interface operation mode register 0 (ASIM0)	p. 438 ☐
				Only the first bit of the receive data is checked as the stop bit, regardless of the number of stop bits.	p. 438 ☐
				If an overrun error occurs, the next receive data is not written to receive buffer register 0 (RXB0) but discarded.	p. 438 ☐
				If data is read from ASIS0, a wait cycle is generated. Do not read data from ASIS0 when the peripheral hardware clock (f_{PRS}) is stopped. For details, see CHAPTER 36 CAUTIONS FOR WAIT.	p. 438 ☐
			BRGC0: Baud rate generator control register 0	Make sure that bit 6 (TXE0) and bit 5 (RXE0) of the ASIM0 register = 0 when rewriting the MDL04 to MDL00 bits.	p. 440 ☐
				Make sure that bit 7 (POWER0) of the ASIM0 register = 0 when rewriting the TPS01 and TPS00 bits.	p. 440 ☐
	Hard			The baud rate value is the output clock of the 5-bit counter divided by 2.	p. 440 ☐

(16/30)

Chapter	Classification	Function	Details of Function	Cautions	Page
Chapter 14	Soft	Serial interface UART0	POWER0, TXE0, RXE0: Bits 7, 6, 5 of ASIM0	Clear POWER0 to 0 after clearing TXE0 and RXE0 to 0 to set the operation stop mode. To start the communication, set POWER0 to 1, and then set TXE0 or RXE0 to 1.	p. 441 ☐
			UART mode	Take relationship with the other party of communication when setting the port mode register and port register.	p. 442 ☐
			UART transmission	After transmit data is written to TXS0, do not write the next transmit data before the transmission completion interrupt signal (INTST0) is generated.	p. 445 ☐
			UART reception	If a reception error occurs, read asynchronous serial interface reception error status register 0 (ASIS0) and then read receive buffer register 0 (RXB0) to clear the error flag. Otherwise, an overrun error will occur when the next data is received, and the reception error status will persist.	p. 446 ☐
				Reception is always performed with the “number of stop bits = 1”. The second stop bit is ignored.	p. 446 ☐
			Error of baud rate	Keep the baud rate error during transmission to within the permissible error range at the reception destination.	p. 450 ☐
				Make sure that the baud rate error during reception satisfies the range shown in (4) Permissible baud rate range during reception.	p. 450 ☐
			Permissible baud rate range during reception	Make sure that the baud rate error during reception is within the permissible error range, by using the calculation expression shown below.	p. 451 ☐
Chapter 15	Soft	Serial interface UART6	UART mode	The TxD6 output inversion function inverts only the transmission side and not the reception side. To use this function, the reception side must be ready for reception of inverted data.	p. 453 ☐
				If clock supply to serial interface UART6 is not stopped (e.g., in the HALT mode), normal operation continues. If clock supply to serial interface UART6 is stopped (e.g., in the STOP mode), each register stops operating, and holds the value immediately before clock supply was stopped. The TxD6 pin also holds the value immediately before clock supply was stopped and outputs it. However, the operation is not guaranteed after clock supply is resumed. Therefore, reset the circuit so that POWER6 = 0, RXE6 = 0, and TXE6 = 0.	p. 453 ☐
				Set POWER6 = 1 and then set TXE6 = 1 (transmission) or RXE6 = 1 (reception) to start communication.	p. 453 ☐
				TXE6 and RXE6 are synchronized by the base clock (f_{XCLK6}) set by CKSR6. To enable transmission or reception again, set TXE6 or RXE6 to 1 at least two clocks of the base clock after TXE6 or RXE6 has been cleared to 0. If TXE6 or RXE6 is set within two clocks of the base clock, the transmission circuit or reception circuit may not be initialized.	p. 453 ☐
				Set transmit data to TXB6 at least one base clock (f_{XCLK6}) after setting TXE6 = 1.	p. 453 ☐
				If data is continuously transmitted, the communication timing from the stop bit to the next start bit is extended two operating clocks of the macro. However, this does not affect the result of communication because the reception side initializes the timing when it has detected a start bit. Do not use the continuous transmission function if the interface is used in LIN communication operation.	p. 453 ☐
			TXB6: Transmit buffer register 6	Do not write data to TXB6 when bit 1 (TXBF6) of asynchronous serial interface transmission status register 6 (ASIF6) is 1.	p. 459 ☐
				Do not refresh (write the same value to) TXB6 by software during a communication operation (when bits 7 and 6 (POWER6, TXE6) of asynchronous serial interface operation mode register 6 (ASIM6) are 1 or when bits 7 and 5 (POWER6, RXE6) of ASIM6 are 1).	p. 459 ☐
				Set transmit data to TXB6 at least one base clock (f_{XCLK6}) after setting TXE6 = 1.	p. 459 ☐

(17/30)

Chapter	Classification	Function	Details of Function	Cautions	Page
Chapter 15	Soft	Serial interface UART6	ASIM6: Asynchronous serial interface operation mode register 6	To start the transmission, set POWER6 to 1 and then set TXE6 to 1. To stop the transmission, clear TXE6 to 0, and then clear POWER6 to 0.	p. 461 ☐
				To start the reception, set POWER6 to 1 and then set RXE6 to 1. To stop the reception, clear RXE6 to 0, and then clear POWER6 to 0.	p. 461 ☐
				Set POWER6 to 1 and then set RXE6 to 1 while a high level is input to the RxD6 pin. If POWER6 is set to 1 and RXE6 is set to 1 while a low level is input, reception is started.	p. 461 ☐
				TXE6 and RXE6 are synchronized by the base clock (f_{XCLK6}) set by CKSR6. To enable transmission or reception again, set TXE6 or RXE6 to 1 at least two clocks of the base clock after TXE6 or RXE6 has been cleared to 0. If TXE6 or RXE6 is set within two clocks of the base clock, the transmission circuit or reception circuit may not be initialized.	p. 461 ☐
				Set transmit data to TXB6 at least one base clock (f_{XCLK6}) after setting TXE6 = 1.	p. 461 ☐
				Clear the TXE6 and RXE6 bits to 0 before rewriting the PS61, PS60, and CL6 bits.	p. 461 ☐
				Fix the PS61 and PS60 bits to 0 when used in LIN communication operation.	p. 461 ☐
				Clear TXE6 to 0 before rewriting the SL6 bit. Reception is always performed with “the number of stop bits = 1”, and therefore, is not affected by the set value of the SL6 bit.	p. 461 ☐
				Make sure that RXE6 = 0 when rewriting the ISRM6 bit.	p. 461 ☐
			ASIS6: Asynchronous serial interface reception error status register 6	The operation of the PE6 bit differs depending on the set values of the PS61 and PS60 bits of asynchronous serial interface operation mode register 6 (ASIM6).	p. 462 ☐
				For the stop bit of the receive data, only the first bit is checked regardless of the number of stop bits.	p. 462 ☐
				If an overrun error occurs, the next receive data is not written to receive buffer register 6 (RXB6) but discarded.	p. 462 ☐
				If data is read from ASIS6, a wait cycle is generated. Do not read data from ASIS6 when the peripheral hardware clock (f_{PRS}) is stopped. For details, see CHAPTER 36 CAUTIONS FOR WAIT.	p. 462 ☐
			ASIF6: Asynchronous serial interface transmission status register 6	To transmit data continuously, write the first transmit data (first byte) to the TXB6 register. Be sure to check that the TXBF6 flag is “0”. If so, write the next transmit data (second byte) to the TXB6 register. If data is written to the TXB6 register while the TXBF6 flag is “1”, the transmit data cannot be guaranteed.	p. 463 ☐
				To initialize the transmission unit upon completion of continuous transmission, be sure to check that the TXSF6 flag is “0” after generation of the transmission completion interrupt, and then execute initialization. If initialization is executed while the TXSF6 flag is “1”, the transmit data cannot be guaranteed.	p. 463 ☐
			CKSR6: Clock selection register 6	Make sure POWER6 = 0 when rewriting TPS63 to TPS60.	p. 465 ☐
			BRGC6: Baud rate generator control register 6	Make sure that bit 6 (TXE6) and bit 5 (RXE6) of the ASIM6 register = 0 when rewriting the MDL67 to MDL60 bits.	p. 465 ☐
	Hard			The baud rate is the output clock of the 8-bit counter divided by 2.	p. 465 ☐
	Soft		ASICL6: Asynchronous serial interface control register 6	ASICL6 can be refreshed (the same value is written) by software during a communication operation (when bits 7 and 6 (POWER6, TXE6) of ASIM6 = 1 or bits 7 and 5 (POWER6, RXE6) of ASIM6 = 1). However, do not set both SBRT6 and SBTT6 to 1 by a refresh operation during SBF reception (SBRT6 = 1) or SBF transmission (until INTST6 occurs since SBTT6 has been set (1)), because it may re-trigger SBF reception or SBF transmission.	p. 466 ☐
				In the case of an SBF reception error, the mode returns to the SBF reception mode. The status of the SBRF6 flag is held (1).	p. 467 ☐
				Before setting the SBRT6 bit, make sure that bit 7 (POWER6) and bit 5 (RXE6) of ASIM6 = 1. After setting the SBRT6 bit to 1, do not clear it to 0 before SBF reception is completed (before an interrupt request signal is generated).	p. 467 ☐

(18/30)

Chapter	Classification	Function	Details of Function	Cautions	Page
Chapter 15	Soft	Serial interface UART6	ASICL6: Asynchronous serial interface control register 6	The read value of the SBRT6 bit is always 0. SBRT6 is automatically cleared to 0 after SBF reception has been correctly completed.	p. 467 ☐
				Before setting the SBTT6 bit to 1, make sure that bit 7 (POWER6) and bit 6 (TXE6) of ASIM6 = 1. After setting the SBTT6 bit to 1, do not clear it to 0 before SBF transmission is completed (before an interrupt request signal is generated).	p. 467 ☐
				The read value of the SBTT6 bit is always 0. SBTT6 is automatically cleared to 0 at the end of SBF transmission	p. 467 ☐
				Do not set the SBRT6 bit to 1 during reception, and do not set the SBTT6 bit to 1 during transmission.	p. 467 ☐
				When the TXDLV6 bit is set to 1 (inverted TxD6 output), the TxD6/SCLA0/P60 pin cannot be used as a general-purpose port, regardless of the settings of POWER6 and TXE6. When using the TxD6/SCLA0/P60 pin as a general-purpose port, clear the TXDLV6 bit to 0 (normal TxD6 output).	p. 467 ☐
				Before rewriting the DIR6 and TXDLV6 bits, clear the TXE6 and RXE6 bits to 0.	p. 467 ☐
			POWER6, TXE6, RXE6: Bits 7, 6, 5 of ASIM6	Clear POWER6 to 0 after clearing TXE6 and RXE6 to 0 to stop the operation. To start the communication, set POWER6 to 1, and then set TXE6 or RXE6 to 1.	p. 469 ☐
			UART mode	Take relationship with the other party of communication when setting the port mode register and port register.	p. 470 ☐
			Parity types and operation	Fix the PS61 and PS60 bits to 0 when the device is used in LIN communication operation.	p. 473 ☐
			Continuous transmission	The TXBF6 and TXSF6 flags of the ASIF6 register change from “10” to “11”, and to “01” during continuous transmission. To check the status, therefore, do not use a combination of the TXBF6 and TXSF6 flags for judgment. Read only the TXBF6 flag when executing continuous transmission.	p. 475 ☐
				When the device is use in LIN communication operation, the continuous transmission function cannot be used. Make sure that asynchronous serial interface transmission status register 6 (ASIF6) is 00H before writing transmit data to transmit buffer register 6 (TXB6).	p. 475 ☐
				To transmit data continuously, write the first transmit data (first byte) to the TXB6 register. Be sure to check that the TXBF6 flag is “0”. If so, write the next transmit data (second byte) to the TXB6 register. If data is written to the TXB6 register while the TXBF6 flag is “1”, the transmit data cannot be guaranteed.	p. 475 ☐
				To initialize the transmission unit upon completion of continuous transmission, be sure to check that the TXSF6 flag is “0” after generation of the transmission completion interrupt, and then execute initialization. If initialization is executed while the TXSF6 flag is “1”, the transmit data cannot be guaranteed.	p. 475 ☐
				During continuous transmission, the next transmission may complete before execution of INTST6 interrupt servicing after transmission of one data frame. As a countermeasure, detection can be performed by developing a program that can count the number of transmit data and by referencing the TXSF6 flag.	p. 475 ☐
			Normal reception	If a reception error occurs, read ASIS6 and then RXB6 to clear the error flag. Otherwise, an overrun error will occur when the next data is received, and the reception error status will persist.	p. 479 ☐
				Reception is always performed with the “number of stop bits = 1”. The second stop bit is ignored.	p. 479 ☐
				Be sure to read asynchronous serial interface reception error status register 6 (ASIS6) before reading RXB6.	p. 479 ☐
			Error of baud rate	Keep the baud rate error during transmission to within the permissible error range at the reception destination.	p. 486 ☐
				Make sure that the baud rate error during reception satisfies the range shown in (4) Permissible baud rate range during reception.	p. 486 ☐
			Permissible baud rate range during reception	Make sure that the baud rate error during reception is within the permissible error range, by using the calculation expression shown below.	p. 487 ☐

(19/30)

Chapter	Classification	Function	Details of Function	Cautions	Page
Chapter 16	Soft	Serial interface CSI10, CSI11	SOTB1n: Transmit buffer register 1n	Do not access SOTB1n when CSOT1n = 1 (during serial communication).	p. 492 ☐
				In the slave mode, transmission/reception is started when data is written to SOTB11 with a low level input to the $\overline{SSI11}$ pin. For details on the transmission/reception operation, see 16.4.2 (2) Communication operation.	p. 492 ☐
			CSIM10: Serial operation mode register 10	Be sure to clear bit 5 to 0.	p. 493 ☐
			CSIC10: Serial clock selection register 10	Do not write to CSIC10 while CSIE10 = 1 (operation enabled).	p. 496 ☐
				To use P10/$\overline{SCK10}$/TxD0 and P12/SO10 as general-purpose ports, set CSIC10 in the default status (00H).	p. 496 ☐
				The phase type of the data clock is type 1 after reset.	p. 496 ☐
			CSIC11: Serial clock selection register 11	Do not write to CSIC11 while CSIE11 = 1 (operation enabled).	p. 498 ☐
				To use P02/SO11 and P04/$\overline{SCK11}$ as general-purpose ports, set CSIC11 in the default status (00H).	p. 498 ☐
				The phase type of the data clock is type 1 after reset.	p. 498 ☐
			3-wire serial I/O mode	Take relationship with the other party of communication when setting the port mode register and port register.	p. 500 ☐
			Communication operation	Do not access the control register and data register when CSOT1n = 1 (during serial communication).	p. 503 ☐
				When using serial interface CSI11, wait for the duration of at least one clock before the clock operation is started to change the level of the $\overline{SSI11}$ pin in the slave mode; otherwise, malfunctioning may occur.	p. 503 ☐
			SO1n output	If a value is written to CSIE1n, TRMD1n, DAP1n, and DIR1n, the output value of SO1n changes.	p. 511 ☐
Chapter 17	Soft	Serial interface CSIA0	SIOA0: Serial I/O shift register 0	A communication operation is started by writing to SIOA0. Consequently, when transmission is disabled (bit 3 (TXEA0) of CSIMA0 = 0), write dummy data to the SIOA0 register to start the communication operation, and then perform a receive operation.	p. 515 ☐
				Do not write data to SIOA0 while the automatic transmit/receive function is operating.	p. 515 ☐
			CSIMA0: Serial operation mode specification register 0	When CSIAE0 = 0, the buffer RAM cannot be accessed.	p. 516 ☐
				When CSIAE0 is changed from 1 to 0, the registers and bits mentioned in Note above are asynchronously initialized. To set CSIAE0 = 1 again, be sure to re-set the initialized registers.	p. 516 ☐
				When CSIAE0 is re-set to 1 after CSIAE0 is changed from 1 to 0, it is not guaranteed that the value of the buffer RAM will be retained.	p. 516 ☐
			CSIS0: Serial status register 0	Be sure to clear bit 7 to 0.	p. 517 ☐
				During transfer (TSF0 = 1), rewriting serial operation mode specification register 0 (CSIMA0), serial status register 0 (CSIS0), divisor selection register 0 (BRGCA0), automatic data transfer address point specification register 0 (ADTP0), automatic data transfer interval specification register 0 (ADTI0), and serial I/O shift register 0 (SIOA0) are prohibited. However, these registers can be read and re-written to the same value. In addition, the buffer RAM can be rewritten during transfer.	p. 518 ☐
			CSIT0: Serial trigger register 0	Even if ATSTP0 or ATSTA0 is set to 1, automatic transfer cannot be started/stopped until 1-byte transfer is complete.	p. 519 ☐
				ATSTP0 and ATSTA0 change to 0 automatically after the interrupt signal INTACSI is generated.	p. 519 ☐
				After automatic data transfer is stopped, the data address when the transfer stopped is stored in automatic data transfer address count register 0 (ADTC0). However, since no function to restart automatic data transfer is incorporated, when transfer is stopped by setting ATSTP0 = 1, start automatic data transfer by setting ATSTA0 to 1 after re-setting the registers.	p. 519 ☐

(20/30)

Chapter	Classification	Function	Details of Function	Cautions	Page
Chapter 17	Soft	Serial interface CSIA0	ADTP0: Automatic data transfer address point specification register 0	Be sure to clear bits 7 to 5 to “0”.	p. 521 ☐
			ADTI0: Automatic data transfer interval specification register 0	Because the setting of bit 5 (STBE0) and bit 4 (BUSYE0) of serial status register 0 (CSIS0) takes priority over the ADTI0 setting, the interval time based on the setting of STBE0 and BUSYE0 is generated even when ADTI0 is cleared to 00H.	p. 522 ☐
			3-wire serial I/O mode	Take relationship with the other party of communication when setting the port mode register and port register.	p. 525 ☐
			1-byte transmission/ reception	The SOA0 pin becomes low level by an SIOA0 write.	p. 527 ☐
			Communication start	If CSIAE0 is set to 1 after data is written to SIOA0, communication does not start.	p. 529 ☐
			3-wire serial I/O mode with automatic transmit/receive function	A wait state may be generated when data is written to the buffer RAM. For details, see CHAPTER 36 CAUTIONS FOR WAIT.	p. 530 ☐
				Take the relationship with the other communicating party into consideration when setting the port mode register and port register.	p. 532 ☐
			Automatic transmission/ reception mode	Because, in the automatic transmission/reception mode, the automatic transmit/receive function writes/reads data to/from the internal buffer RAM after 1-byte transmission/reception, an interval is inserted until the next transmission/reception. As the buffer RAM write/read is performed at the same time as CPU processing, the interval is dependent upon the value of automatic data transfer interval specification register 0 (ADTI0) and the set values of bits 5 and 4 (STBE0, BUSYE0) of serial status register 0 (CSIS0) (see (5) Automatic transmit/receive interval time).	p. 534 ☐
				If an access to the buffer RAM by the CPU conflicts with an access to the buffer RAM by serial interface CSIA0 during the interval period, the interval time specified by automatic data transfer interval specification register 0 (ADTI0) may be extended.	p. 534 ☐
			Automatic transmission	Because, in the automatic transmission mode, the automatic transmit/receive function reads data from the internal buffer RAM after 1-byte transmission, an interval is inserted until the next transmission. As the buffer RAM read is performed at the same time as CPU processing, the interval is dependent upon the value of automatic data transfer interval specification register 0 (ADTI0) and the set values of bits 5 and 4 (STBE0, BUSYE0) of serial status register 0 (CSIS0) (see (5) Automatic transmit/receive interval time).	p. 539 ☐
				If an access to the buffer RAM by the CPU conflicts with an access to the buffer RAM by serial interface CSIA0 during the interval period, the interval time specified by automatic data transfer interval specification register 0 (ADTI0) may be extended.	p. 539 ☐
			Repeat transmission mode	Because, in the repeat transmission mode, a read is performed on the buffer RAM after the transmission of one byte, the interval is included in the period up to the next transmission. As the buffer RAM read is performed at the same time as CPU processing, the interval is dependent upon automatic data transfer interval specification register 0 (ADTI0) and the set values of bits 5 and 4 (STBE0, BUSYE0) of serial status register 0 (CSIS0) (see (5) Automatic transmit/receive interval time).	p. 541 ☐
				If an access to the buffer RAM by the CPU conflicts with an access to the buffer RAM by serial interface CSIA0 during the interval period, the interval time specified by automatic data transfer interval specification register 0 (ADTI0) may be extended.	p. 541 ☐

(21/30)

Chapter	Classification	Function	Details of Function	Cautions	Page
Chapter 17	Soft	Serial interface CSIA0	Automatic transmission/ reception suspension and restart	If the HALT instruction is executed during automatic transmission/reception, communication is suspended and the HALT mode is set if during 8-bit data communication. When the HALT mode is cleared, automatic transmission/reception is restarted from the suspended point.	p. 544 ☐
				When suspending automatic transmission/reception, do not change the operating mode to 3-wire serial I/O mode while TSF0 = 1.	p. 544 ☐
			Busy control option	Busy control cannot be used simultaneously with the interval time control function of automatic data transfer interval specification register 0 (ADTI0).	p. 545 ☐
			Busy & strobe control option	When TSF0 is cleared, the SOA0 pin goes low.	p. 547 ☐
Chapter 18	Soft	Serial interface IIC0	–	Do not use serial interface IIC0 and the multiplier/divider simultaneously, because various flags corresponding to interrupt request sources are shared among serial interface IIC0 and the multiplier/divider.	p. 550 ☐
			IIC0: IIC shift register 0	Do not write data to IIC0 during data transfer.	p. 553 ☐
				Write or read IIC0 only during the wait period. Accessing IIC0 in a communication state other than during the wait period is prohibited. When the device serves as the master, however, IIC0 can be written only once after the communication trigger bit (STT0) is set to 1.	p. 553 ☐
				When communication is reserved, write data to the IIC0 register after the interrupt triggered by a stop condition is detected.	p. 553 ☐
			IICC0: IIC control register 0	If the operation of I^2C is enabled (IICE0 = 1) when the SCL0 line is high level, the SDA0 line is low level, and the digital filter is turned on (DFC0 of the IICCL0 register = 1), a start condition will be inadvertently detected immediately. In this case, set (1) the LREL0 bit by using a 1-bit memory manipulation instruction immediately after enabling operation of I^2C (IICE0 = 1).	p. 557 ☐
				When bit 3 (TRC0) of the IIC status register 0 (IICS0) is set to 1 (transmission status), bit 5 (WREL0) of the IICC0 register is set to 1 during the ninth clock and wait is canceled, after which the TRC0 bit is cleared (reception status) and the SDAA0 line is set to high impedance. Release the wait performed while the TRC bit is 1 (transmission status) by writing to the IIC shift register.	p. 560 ☐
			IICS0: IIC status register 0	If data is read from IICS0 register, a wait cycle is generated. Do not read data from IICS0 register when the peripheral hardware clock (f_{PRS}) is stopped. For details, see CHAPTER 36 CAUTIONS FOR WAIT.	p. 561 ☐
			IICF0: IIC flag register 0	Write to STCEN bit only when the operation is stopped (IICE0 = 0).	p. 564 ☐
				As the bus release status (IICBSY = 0) is recognized regardless of the actual bus status when STCEN = 1, when generating the first start condition (STT0 = 1), it is necessary to verify that no third party communications are in progress in order to prevent such communications from being destroyed.	p. 564 ☐
				Write to IICRSV bit only when the operation is stopped (IICE0 = 0).	p. 564 ☐
			Selection clock setting	Determine the transfer clock frequency of I^2C by using CLX0, SMC0, CL01, and CL00 before enabling the operation (by setting bit 7 (IICE0) of IIC control register 0 (IICC0) to 1). To change the transfer clock frequency, clear IICE0 once to 0.	p. 567 ☐
			When STCEN = 0	Immediately after I^2C operation is enabled (IICE0 = 1), the bus communication status (IICBSY (bit 6 of IICF0) = 1) is recognized regardless of the actual bus status. When changing from a mode in which no stop condition has been detected to a master device communication mode, first generate a stop condition to release the bus, then perform master device communication. When using multiple masters, it is not possible to perform master device communication when the bus has not been released (when a stop condition has not been detected). Use the following sequence for generating a stop condition. • Set IIC clock selection register 0 (IICCL0). • Set bit 7 (IICE0) of IIC control register 0 (IICC0) to 1. • Set bit 0 (SPT0) of IICC0 to 1.	p. 584 ☐
			When STCEN = 1	Immediately after I^2C operation is enabled (IICE0 = 1), the bus released status (IICBSY = 0) is recognized regardless of the actual bus status. To generate the first start condition (STT0 (bit 1 of IIC control register 0 (IICC0)) = 1), it is necessary to confirm that the bus has been released, so as to not disturb other communications.	p. 584 ☐

(22/30)

Chapter	Classification	Function	Details of Function	Cautions	Page
Chapter 18	Soft	Serial interface IIC0	If other I^2C communications are already in progress	If I^2C operation is enabled and the device participates in communication already in progress when the SDA0 pin is low and the SCL0 pin is high, the macro of I^2C recognizes that the SDA0 pin has gone low (detects a start condition). If the value on the bus at this time can be recognized as an extension code, $\overline{ACK}$ is returned, but this interferes with other I^2C communications. To avoid this, start I^2C in the following sequence. • Clear bit 4 (SPIE0) of IICC0 to 0 to disable generation of an interrupt request signal (INTIIC0) when the stop condition is detected. • Set bit 7 (IICE0) of IICC0 to 1 to enable the operation of I^2C. • Wait for detection of the start condition. • Set bit 6 (LREL0) of IICC0 to 1 before $\overline{ACK}$ is returned (4 to 80 clocks after setting IICE0 to 1), to forcibly disable detection.	p. 584 ☐
			Transfer clock frequency setting	Determine the transfer clock frequency by using SMC0, CL01, CL00 (bits 3, 1, and 0 of IICL0), and CLX0 (bit 0 of IICX0) before enabling the operation (IICE0 = 1). To change the transfer clock frequency, clear IICE0 to 0 once.	p. 584 ☐
			STT0, SPT0: Bits 1, 0 of IIC control register 0 (IICC0)	Setting STT0 and SPT0 (bits 1 and 0 of IICC0) again after they are set and before they are cleared to 0 is prohibited.	p. 585 ☐
			Transmission reserve	When transmission is reserved, set SPIE0 (bit 4 of IICL0) to 1 so that an interrupt request is generated when the stop condition is detected. Transfer is started when communication data is written to IIC0 after the interrupt request is generated. Unless the interrupt is generated when the stop condition is detected, the device stops in the wait state because the interrupt request is not generated when communication is started. However, it is not necessary to set SPIE0 to 1 when MSTS0 (bit 7 of IICS0) is detected by software.	p. 585 ☐
Chapter 19	Soft	Multiplier/ divider	–	Do not use serial interface IIC0 and the multiplier/divider simultaneously, because various flags corresponding to interrupt request sources are shared among serial interface IIC0 and the multiplier/divider.	p. 621 ☐
			SDR0: Remainder data register 0	The value read from SDR0 during operation processing (while bit 7 (DMUE) of multiplier/divider control register 0 (DMUC0) is 1) is not guaranteed.	p. 623 ☐
				SDR0 is reset when the operation is started (when DMUE is set to 1).	p. 623 ☐
			MDA0H, MDA0L: Multiplication/ division data register A0	MDA0H is cleared to 0 when an operation is started in the multiplication mode (when multiplier/divider control register 0 (DMUC0) is set to 81H).	p. 623 ☐
				Do not change the value of MDA0 during operation processing (while bit 7 (DMUE) of multiplier/divider control register 0 (DMUC0) is 1). Even in this case, the operation is executed, but the result is undefined.	p. 623 ☐
				The value read from MDA0 during operation processing (while DMUE is 1) is not guaranteed.	p. 623 ☐
			MDB0: Multiplication/ division data register B0	Do not change the value of MDB0 during operation processing (while bit 7 (DMUE) of multiplier/divider control register 0 (DMUC0) is 1). Even in this case, the operation is executed, but the result is undefined.	p. 624 ☐
				Do not clear MDB0 to 0000H in the division mode. If set, undefined operation results are stored in MDA0 and SDR0.	p. 624 ☐
			DMUC0: Multiplier/divider control register 0	If DMUE is cleared to 0 during operation processing (when DMUE is 1), the operation result is not guaranteed. If the operation is completed while the clearing instruction is being executed, the operation result is guaranteed, provided that the interrupt flag is set.	p. 625 ☐
				Do not change the value of DMUSEL0 during operation processing (while DMUE is 1). If it is changed, undefined operation results are stored in multiplication/division data register A0 (MDA0) and remainder data register 0 (SDR0).	p. 625 ☐
				If DMUE is cleared to 0 during operation processing (while DMUE is 1), the operation processing is stopped. To execute the operation again, set multiplication/division data register A0 (MDA0), multiplication/division data register B0 (MDB0), and multiplier/divider control register 0 (DMUC0), and start the operation (by setting DMUE to 1).	p. 625 ☐

(23/30)

Chapter	Classification	Function	Details of Function	Cautions	Page
Chapter 20	Soft	Interrupt function	1F0L, 1F0L, 1F1L, 1F1H: Interrupt request flag registers	When operating a timer, serial interface, or A/D converter after standby release, operate it once after clearing the interrupt request flag. An interrupt request flag may be set by noise.	p. 637 ☐

				When manipulating a flag of the interrupt request flag register, use a 1-bit memory manipulation instruction (CLR1). When describing in C language, use a bit manipulation instruction such as “IF0L.0 = 0;” or “_asm(“clr1 IF0L, 0”);” because the compiled assembler must be a 1-bit memory manipulation instruction (CLR1).
				If a program is described in C language using an 8-bit memory manipulation instruction such as “IF0L &= 0xfe;” and compiled, it becomes the assembler of three instructions.
				mov a, IF0L
				and a, #0FEH
				mov IF0L, a
				In this case, even if the request flag of another bit of the same interrupt request flag register (IF0L) is set to 1 at the timing between “mov a, IF0L” and “mov IF0L, a”, the flag is cleared to 0 at “mov IF0L, a”. Therefore, care must be exercised when using an 8-bit memory manipulation instruction in C language.
					p. 637 ☐

				Be sure to clear bits 2, 4 to 7 of IF1L and bits 1 to 7 of IF1H to 0. (78K0/KB2)	p. 638 ☐
				Be sure to clear bits 6 and 7 of IF1L to 0 in the 38-pin and 44-pin products. Be sure to clear bit 7 of IF1L to 0 in the 48-pin products.	p. 639 ☐
				Be sure to clear bits 1 to 7 of IF1H to 0. (78K0/KC2)	p. 639 ☐
				Be sure to clear bit 7 of 1F1L and bits 1 to 7 of IF1H to 0. (78K0/KD2)	p. 640 ☐
				Be sure to clear bits 1 to 7 of IF1H to 0 for the products whose flash memory is less than 32 KB. Be sure to clear bits 4 to 7 of IF1H to 0 for the products whose flash memory is at least 48 KB. (78K0/KE2)	p. 641 ☐
				Be sure to clear bits 5 to 7 of IF1H to 0. (78K0/KF2)	p. 642 ☐
			MK0L, MK0H, MK1L, MK1H: Interrupt mask flag registers	Be sure to set bits 2, 4 to 7 of MK1L and bits 1 to 7 of MK1H to 1. (78K0/KB2)	p. 643 ☐
				Be sure to set bits 6 and 7 of MK1L to 1 in the 38-pin and 44-pin products. Be sure to set bit 7 of MK1L to 1 in the 48-pin products. Be sure to set bits 1 to 7 of MK1H to 1. (78K0/KC2)	p. 644 ☐
				Be sure to set bit 7 of MK1L and bits 1 to 7 of MK1H to 1. (78K0/KD2)	p. 645 ☐
				Be sure to set bits 1 to 7 of MK1H to 1 for the products whose flash memory is less than 32 KB. Be sure to set bits 4 to 7 of MK1H to 1 for the products whose flash memory is at least 48 KB. (78K0/KE2)	p. 646 ☐
				Be sure to set bits 5 to 7 of MK1H to 1. (78K0/KF2)	p. 647 ☐
			PR0L, PR0H, PR1L, PR1H: Priority specification flag registers	Be sure to set bits 2, 4 to 7 of PR1L and bits 1 to 7 of PR1H to 1. (78K0/KB2)	p. 648 ☐
				Be sure to set bits 6 and 7 of PR1L to 1 in the 38-pin and 44-pin products. Be sure to set bit 7 of PR1L to 1 in the 48-pin products. Be sure to set bits 1 to 7 of PR1H to 1. (78K0/KC2)	p. 649 ☐
				Be sure to set bit 7 of PR1L and bits 1 to 7 of PR1H to 1. (78K0/KD2)	p. 650 ☐
				Be sure to set bits 1 to 7 of PR1H to 1 for the products whose flash memory is less than 32 KB. Be sure to set bits 4 to 7 of PR1H to 1 for the products whose flash memory is at least 48 KB. (78K0/KE2)	p. 651 ☐
				Be sure to set bits 5 to 7 of PR1H to 1. (78K0/KF2)	p. 652 ☐

(24/30)

Chapter	Classification	Function	Details of Function	Cautions	Page
Chapter 20	Soft	Interrupt function	EGP, EGN: External interrupt rising edge, falling edge enable registers	Be sure to clear bits 6 and 7 of EGP and EGN to 0 in 78K0/KB2, and the 38-pin and 44-pin products of 78K0/KC2. Be sure to clear bit 7 of EGP and EGN to 0 in 78K0/KD2, and the 48-pin products of 78K0/KC2.	p. 653 ☐
				Select the port mode by clearing EGPn and EGNn to 0 because an edge may be detected when the external interrupt function is switched to the port function.	p. 654 ☐
			Software interrupt request	Do not use the RETI instruction for restoring from the software interrupt.	p. 658 ☐
			BRK instruction	The BRK instruction is not one of the above-listed interrupt request hold instructions. However, the software interrupt activated by executing the BRK instruction causes the IE flag to be cleared. Therefore, even if a maskable interrupt request is generated during execution of the BRK instruction, the interrupt request is not acknowledged.	p. 662 ☐
Chapter 21	Soft	Key interrupt function	KRM: Key return mode register	If any of the KRMn bits used is set to 1, set bit n (PU7n) of the corresponding pull-up resistor register 7 (PU7) to 1.	p. 665 ☐
				If KRM is changed, the interrupt request flag may be set. Therefore, disable interrupts and then change the KRM register. Clear the interrupt request flag and enable interrupts.	p. 665 ☐
				The bits not used in the key interrupt mode can be used as normal ports.	p. 665 ☐
				For the 38-pin products of 78K0/KC2, be sure to set bits 2 to 7 of KRM to “0”. For the 44-pin and 48-pin products of 78K0/KC2, be sure to set bits 4 to 7 of KRM to “0”.	p. 665 ☐
Chapter 22	Soft	Standby function	Standby function	The STOP mode can be used only when the CPU is operating on the main system clock. The subsystem clock oscillation cannot be stopped. The HALT mode can be used when the CPU is operating on either the main system clock or the subsystem clock.	p. 666 ☐
				When shifting to the STOP mode, be sure to stop the peripheral hardware operation operating with main system clock before executing STOP instruction.	p. 666 ☐
				The following sequence is recommended for operating current reduction of the A/D converter when the standby function is used: First clear bit 7 (ADCS) and bit 0 (ADCE) of the A/D converter mode register (ADM) to 0 to stop the A/D conversion operation, and then execute the STOP instruction.	p. 666 ☐
			OSTC: Oscillation stabilization time counter status register	After the above time has elapsed, the bits are set to 1 in order from MOST11 and remain 1.	p. 668 ☐
				The oscillation stabilization time counter counts up to the oscillation stabilization time set by OSTS. If the STOP mode is entered and then released while the internal high-speed oscillation clock is being used as the CPU clock, set the oscillation stabilization time as follows. • Desired OSTC oscillation stabilization time ≤ Oscillation stabilization time set by OSTS Note, therefore, that only the status up to the oscillation stabilization time set by OSTS is set to OSTC after STOP mode is released.	p. 668 ☐
	Hard			The X1 clock oscillation stabilization wait time does not include the time until clock oscillation starts (“a” below).	p. 668 ☐
	Soft		OSTS: Oscillation stabilization time select register	To set the STOP mode when the X1 clock is used as the CPU clock, set OSTS before executing the STOP instruction.	p. 669 ☐
				Do not change the value of the OSTS register during the X1 clock oscillation stabilization time.	p. 669 ☐
				The oscillation stabilization time counter counts up to the oscillation stabilization time set by OSTS. If the STOP mode is entered and then released while the internal high-speed oscillation clock is being used as the CPU clock, set the oscillation stabilization time as follows. • Desired OSTC oscillation stabilization time ≤ Oscillation stabilization time set by OSTS Note, therefore, that only the status up to the oscillation stabilization time set by OSTS is set to OSTC after STOP mode is released.	p. 669 ☐

(25/30)

Chapter	Classification	Function	Details of Function	Cautions	Page
Chapter 22	Hard	Standby function	OSTS: Oscillation stabilization time select register	The X1 clock oscillation stabilization wait time does not include the time until clock oscillation starts (“a” below).	p. 669 ☐
	Soft		STOP mode	Because the interrupt request signal is used to clear the standby mode, if there is an interrupt source with the interrupt request flag set and the interrupt mask flag reset, the standby mode is immediately cleared if set. Thus, the STOP mode is reset to the HALT mode immediately after execution of the STOP instruction and the system returns to the operating mode as soon as the wait time set using the oscillation stabilization time select register (OSTS) has elapsed.	p. 674 ☐
				To use the peripheral hardware that stops operation in the STOP mode, and the peripheral hardware for which the clock that stops oscillating in the STOP mode after the STOP mode is released, restart the peripheral hardware.	p. 676 ☐
				Even if “internal low-speed oscillator can be stopped by software” is selected by the option byte, the internal low-speed oscillation clock continues in the STOP mode in the status before the STOP mode is set. To stop the internal low-speed oscillator’s oscillation in the STOP mode, stop it by software and then execute the STOP instruction.	p. 676 ☐
				To shorten oscillation stabilization time after the STOP mode is released when the CPU operates with the high-speed system clock (X1 oscillation), switch the CPU clock to the internal highspeed oscillation clock before the execution of the STOP instruction using the following procedure. <1> Set RSTOP to 0 (starting oscillation of the internal high-speed oscillator) ☐ <2> Set MCM0 to 0 (switching the CPU from X1 oscillation to internal high-speed oscillation) ☐ <3> Check that MCS is 0 (checking the CPU clock) ☐ <4> Check that RSTS is 1 (checking internal high-speed oscillation operation) ☐ <5> Execute the STOP instruction Before changing the CPU clock from the internal high-speed oscillation clock to the high-speed system clock (X1 oscillation) after the STOP mode is released, check the oscillation stabilization time with the oscillation stabilization time counter status register (OSTC).	p. 676 ☐
				If the STOP instruction is executed when AMPH = 1, supply of the CPU clock is stopped for 4.06 to 16.12 μs after the STOP mode is released when the internal high-speed oscillation clock is selected as the CPU clock, or for the duration of 160 external clocks when the high-speed system clock (external clock input) is selected as the CPU clock.	p. 676 ☐
				Execute the STOP instruction after having confirmed that the internal high-speed oscillator is operating stably (RSTS = 1).	p. 676 ☐
Chapter 23	Hard	Reset function	–	For an external reset, input a low level for 10 μs or more to the $\overline{\text{RESET}}$ pin.	p. 681 ☐
				During reset input, the X1 clock, XT1 clock, internal high-speed oscillation clock, and internal low-speed oscillation clock stop oscillating. External main system clock input and external subsystem clock input become invalid.	p. 681 ☐
				When the STOP mode is released by a reset, the STOP mode contents are held during reset input. However, the port pins become high-impedance, except for P130, which is set to low-level output.	p. 681 ☐
			Block diagram of reset function	An LVI circuit internal reset does not reset the LVI circuit.	p. 682 ☐
			Watchdog timer overflow	A watchdog timer internal reset resets the watchdog timer.	p. 684 ☐
	Soft		RESF: Reset control flag register	Do not read data by a 1-bit memory manipulation instruction.	p. 691 ☐
Chapter 24	Soft	Power-on-clear circuit	–	If an internal reset signal is generated in the POC circuit, the reset control flag register (RESF) is cleared to 00H.	p. 692 ☐
				Set the low-voltage detector by software after the reset status is released (see CHAPTER 25 LOW-VOLTAGE DETECTOR).	pp. 694, 695 ☐

(26/30)

Chapter	Classification	Function	Details of Function	Cautions	Page
Chapter 24	Soft	Power-on-clear circuit	In 2.7 V/1.59 V POC mode	A voltage oscillation stabilization time of 1.93 to 5.39 ms is required after the supply voltage reaches 1.59 V (TYP.). If the supply voltage rises from 1.59 V (TYP.) to 2.7 V (TYP.) within 1.93 ms, the power supply oscillation stabilization time of 0 to 5.39 ms is automatically generated before reset processing.	p. 695 ☐
			Cautions for power-on-clear circuit	In a system where the supply voltage (V_{DD}) fluctuates for a certain period in the vicinity of the POC detection voltage (V_{POC}), the system may be repeatedly reset and released from the reset status. In this case, the time from release of reset to the start of the operation of the microcontroller can be arbitrarily set by taking the following action.	p. 696 ☐
Chapter 25	Soft	Low-voltage detector	LVIM: Low-voltage detection register	To stop LVI, follow either of the procedures below. • When using 8-bit memory manipulation instruction: Write 00H to LVIM. • When using 1-bit memory manipulation instruction: Clear LVION to 0.	p. 700 ☐
	Hard			Input voltage from external input pin (EXLVI) must be EXLVI < V_{DD}.	p. 700 ☐
	Soft			When using LVI as an interrupt, if LVION is cleared (0) in a state below the LVI detection voltage, an INTLVI signal is generated and LVIIF becomes 1.	p. 701 ☐
			LVIM and LVIS	With the conventional-specification products (μPD78F05xx and 78F05xxD), after an LVI reset has been generated, do not write values to LVIS and LVIM when LVION = 1.	p. 701 ☐
			LVIS: Low-voltage detection level selection register	Be sure to clear bits 4 to 7 to "0".	p. 701 ☐
				Do not change the value of LVIS during LVI operation.	p. 701 ☐
				When an input voltage from the external input pin (EXLVI) is detected, the detection voltage (V_{EXLVI} = 1.21 V (TYP.)) is fixed. Therefore, setting of LVIS is not necessary.	p. 701 ☐
				With the conventional-specification products (μPD78F05xx and 78F05xxD), after an LVI reset has been generated, do not write values to LVIS and LVIM when LVION = 1.	p. 701 ☐
			When used as reset (When detecting level of supply voltage (V_{DD}))	<1> must always be executed. When LVIMK = 0, an interrupt may occur immediately after the processing in <4>.	p. 703 ☐
				If supply voltage (V_{DD}) ≥ detection voltage (V_{LVI}) when LVIMD is set to 1, an internal reset signal is not generated.	p. 703 ☐
			When used as reset (When detecting level of input voltage from external input pin (EXLVI))	<1> must always be executed. When LVIMK = 0, an interrupt may occur immediately after the processing in <3>.	p. 706 ☐
				If input voltage from external input pin (EXLVI) ≥ detection voltage (V_{EXLVI} = 1.21 V (TYP.)) when LVIMD is set to 1, an internal reset signal is not generated.	p. 706 ☐
	Hard			Input voltage from external input pin (EXLVI) must be EXLVI < V_{DD}.	p. 706 ☐
			When used as interrupt (When detecting level of input voltage from external input pin (EXLVI))	Input voltage from external input pin (EXLVI) must be EXLVI < V_{DD}.	p. 711 ☐
	Soft		Cautions for low-voltage detector	In a system where the supply voltage (V_{DD}) fluctuates for a certain period in the vicinity of the LVI detection voltage (V_{LVI}), the operation is as follows depending on how the low-voltage detector is used. (1) When used as reset The system may be repeatedly reset and released from the reset status. In this case, the time from release of reset to the start of the operation of the microcontroller can be arbitrarily set by taking action (1) below. (2) When used as interrupt Interrupt requests may be frequently generated. Take (b) of action (2) below.	p. 713 ☐
Chapter 26	Soft	Option byte	0082H, 0083H/1082H, 1083H	Be sure to set 00H to 0082H and 0083H (0082H/1082H and 0083H/1083H when the boot swap function is used).	p. 716 ☐
			0080H/1080H	Set a value that is the same as that of 0080H to 1080H because 0080H and 1080H are switched during the boot swap operation.	p. 716 ☐

(27/30)

Chapter	Classification	Function	Details of Function	Cautions	Page
Chapter 26	Soft	Option byte	0081H/1081H	POCMODE can only be written by using a dedicated flash memory programmer. It cannot be set during self-programming or boot swap operation during self-programming. However, because the value of 1081H is copied to 0081H during the boot swap operation, it is recommended to set a value that is the same as that of 0081H to 1081H when the boot swap function is used.	p. 716 ☐
			0084H/1084H	Be sure to set 00H (disabling on-chip debug operation) to 0084H for products not equipped with the on-chip debug function (μPD78F05xx and 78F05xxA). Also set 00H to 1084H because 0084H and 1084H are switched during the boot swap operation.	p. 717 ☐
				To use the on-chip debug function with a product equipped with the on-chip debug function (μPD78F05xxD and 78F05xxDA), set 02H or 03H to 0084H. Set a value that is the same as that of 0084H to 1084H because 0084H and 1084H are switched during the boot swap operation.	p. 717 ☐
			0080H/1080H	The combination of WDCS2 = WDCS1 = WDCS0 = 0 and WINDOW1 = WINDOW0 = 0 is prohibited.	p. 718 ☐
				Setting WINDOW1 = WINDOW0 = 0 is prohibited when using the watchdog timer at 1.8 V ≤ V_{DD} < 2.7 V.	p. 718 ☐
				The watchdog timer continues its operation during self-programming and EEPROM emulation of the flash memory. During processing, the interrupt acknowledge time is delayed. Set the overflow time and window size taking this delay into consideration.	p. 718 ☐
				If LSROSC = 0 (oscillation can be stopped by software), the count clock is not supplied to the watchdog timer in the HALT and STOP modes, regardless of the setting of bit 0 (LSRSTOP) of the internal oscillation mode register (RCM). When 8-bit timer H1 operates with the internal low-speed oscillation clock, the count clock is supplied to 8-bit timer H1 even in the HALT/STOP mode	p. 718 ☐
				Be sure to clear bit 7 to 0.	p. 718 ☐
			0081H/1081H	Be sure to clear bits 7 to 1 to “0”.	p. 719 ☐
Chapter 27	Soft	Flash memory	IMS: Internal memory size switching register, IXS: internal expansion RAM size switching register	Be sure to set each product to the values shown in Table 27-1 after a reset release.	p. 721 ☐
				Be sure to set each product to the values shown in Table 27-2 after a reset release.	p. 722 ☐
				To set the memory size, set IMS and then IXS. Set the memory size so that the internal ROM and internal expansion RAM areas do not overlap.	pp. 721, 723 ☐
			Operation clock	Only the internal high-speed oscillation clock (f_{RH}) can be used when CSI10 is used.	p. 731 ☐
				Only the X1 clock (f_X) or external main system clock (f_{EXCLK}) can be used when UART6 is used.	p. 731 ☐
			Processing of X1, P31 pins	For the product with an on-chip debug function (μPD78F05xxD and 78F05xxDA), connect P31/INTP2/OCD1A and P121/X1/OCD0A as follows when writing the flash memory with a flash memory programmer. • P31/INTP2/OCD1A: Connect to EV_{SS} via a resistor. • P121/X1/OCD0A: Connect to V_{SS} via a resistor.	p. 731 ☐
			Selecting communication mode	When UART6 is selected, the receive clock is calculated based on the reset command sent from the dedicated flash memory programmer after the FLMD0 pulse has been received.	p. 733 ☐
	Hard		Security Settings	After the security setting for the batch erase is set, erasure cannot be performed for the device. In addition, even if a write command is executed, data different from that which has already been written to the flash memory cannot be written, because the erase command is disabled.	p. 735 ☐
				If a security setting that rewrites boot cluster 0 has been applied, boot cluster 0 of that device will not be rewritten, and the device will not be erased in batch.	p. 735 ☐

(28/30)

Chapter	Classification	Function	Details of Function	Cautions	Page
Chapter 27	Hard	Flash memory	E.P.V. command usage	When executing boot swapping, do not use the E.P.V. command with the dedicated flash memory programmer.	pp. 737, 738, 753 ☐
			Flash memory programming by self-programming	The self-programming function cannot be used when the CPU operates with the subsystem clock.	p. 739 ☐
				Oscillation of the internal high-speed oscillator is started during self programming, regardless of the setting of the RSTOP flag (bit 0 of the internal oscillation mode register (RCM)). Oscillation of the internal high-speed oscillator cannot be stopped even if the STOP instruction is executed.	p. 739 ☐
				Input a high level to the FLMD0 pin during self-programming.	p. 739 ☐
	Soft			Be sure to execute the DI instruction before starting self-programming. The self-programming function checks the interrupt request flags (IF0L, IF0H, IF1L, and IF1H). If an interrupt request is generated, self-programming is stopped.	p. 739 ☐
				Self-programming is also stopped by an interrupt request that is not masked even in the DI status. To prevent this, mask the interrupt by using the interrupt mask flag registers (MK0L, MK0H, MK1L, and MK1H).	p. 739 ☐
				Allocate the entry program for self-programming in the common area of 0000H to 7FFFH.	p. 740 ☐
Chapter 28	Hard	On-chip debug function (μPD78F05xxD and 78F05xxDA only)	μPD78F05xxD and 78F05xxDA	The μPD78F05xxD and 78F05xxDA have an on-chip debug function, which is provided for development and evaluation. Do not use the on-chip debug function in products designated for mass production, because the guaranteed number of rewritable times of the flash memory may be exceeded when this function is used, and product reliability therefore cannot be guaranteed. Renesas Electronics is not liable for problems occurring when the on-chip debug function is used.	p. 756 ☐
			When OCD0A/X1 and OCD0B/X2 are used	Input the clock from the OCD0A/X1 pin during on-chip debugging.	p. 756 ☐
				Control the OCD0A/X1 and OCD0B/X2 pins by externally pulling down the OCD1A/P31 pin or by using an external circuit using the P130 pin (that outputs a low level when the device is reset).	p. 756 ☐
			When using the port that controls the FLMD0 pin	When using the port that controls the FLMD0 pin, make sure that it satisfies the values of the high-level output current and FLMD0 supply voltage (minimum value: $0.8V_{DD}$) stated in CHAPTER 30 ELECTRICAL SPECIFICATIONS (STANDARD PRODUCTS) to CHAPTER 33 ELECTRICAL SPECIFICATIONS ((A2) GRADE PRODUCTS: $T_A = -40$ to $+125°C$).	p. 757 ☐
Chapters 30, 31, 32, 33	Hard	Electrical specifications	μPD78F05xxD and 78F05xxDA	The μPD78F05xxD and 78F05xxDA have an on-chip debug function, which is provided for development and evaluation. Do not use the on-chip debug function in products designated for mass production, because the guaranteed number of rewritable times of the flash memory may be exceeded when this function is used, and product reliability therefore cannot be guaranteed. Renesas Electronics is not liable for problems occurring when the on-chip debug function is used.	p. 772 ☐
			–	The pins mounted depend on the product.	pp. 772, 774 to 777, 780 to 783, 785 to 802, 804 to 811, 813 to 830, 832 to 839, 841 to 859, 861 to 868, 870 to 887 ☐
			Absolute maximum ratings	Product quality may suffer if the absolute maximum rating is exceeded even momentarily for any parameter. That is, the absolute maximum ratings are rated values at which the product is on the verge of suffering physical damage, and therefore the product must be used under conditions that ensure that the absolute maximum ratings are not exceeded.	pp. 774, 775, 804, 805, 832, 833, 861, 862 ☐

(29/30)

Chapter	Classification	Function	Details of Function	Cautions	Page
Chapters 30, 31, 32, 33	Hard	Electrical specifications	Value of the current	The value of the current that can be run per pin must satisfy the value of the current per pin and the total value of the currents of all pins.	pp. 775, 805, 833, 862 ☐
			X1 oscillator characteristics	When using the X1 oscillator, wire as follows in the area enclosed by the broken lines in the above figures to avoid an adverse effect from wiring capacitance. • Keep the wiring length as short as possible. • Do not cross the wiring with the other signal lines. • Do not route the wiring near a signal line through which a high fluctuating current flows. • Always make the ground point of the oscillator capacitor the same potential as V_{SS}. • Do not ground the capacitor to a ground pattern through which a high current flows. • Do not fetch signals from the oscillator.	pp. 776, 806, 834, 863 ☐
				Since the CPU is started by the internal high-speed oscillation clock after a reset release, check the X1 clock oscillation stabilization time using the oscillation stabilization time counter status register (OSTC) by the user. Determine the oscillation stabilization time of the OSTC register and oscillation stabilization time select register (OSTS) after sufficiently evaluating the oscillation stabilization time with the resonator to be used.	pp. 776, 806, 834, 863 ☐
			XT1 oscillator characteristics	When using the XT1 oscillator, wire as follows in the area enclosed by the broken lines in the above figure to avoid an adverse effect from wiring capacitance • Keep the wiring length as short as possible. • Do not cross the wiring with the other signal lines. • Do not route the wiring near a signal line through which a high fluctuating current flows. • Always make the ground point of the oscillator capacitor the same potential as V_{SS}. • Do not ground the capacitor to a ground pattern through which a high current flows. • Do not fetch signals from the oscillator.	pp. 777, 807, 835, 864 ☐
				The XT1 oscillator is designed as a low-amplitude circuit for reducing power consumption, and is more prone to malfunction due to noise than the X1 oscillator. Particular care is therefore required with the wiring method when the XT1 clock is used.	pp. 777, 807, 835, 864 ☐
			Recommended oscillator constants	The oscillator constants shown above are reference values based on evaluation in a specific environment by the resonator manufacturer. If it is necessary to optimize the oscillator characteristics in the actual application, apply to the resonator manufacturer for evaluation on the implementation circuit. The oscillation voltage and oscillation frequency only indicate the oscillator characteristic. Use the 78K0/Kx2 so that the internal operation conditions are within the specifications of the DC and AC characteristics.	pp. 778, 779 ☐

(30/30)

Chapter	Classification	Function	Details of Function	Cautions	Page
Chapter 35	Hard	Recommended soldering conditions	μPD78F05xxD	The μPD78F05xxD has an on-chip debug function, which is provided for development and evaluation. Do not use the on-chip debug function in products designated for mass production, because the guaranteed number of rewritable times of the flash memory may be exceeded when this function is used, and product reliability therefore cannot be guaranteed. Renesas Electronics is not liable for problems occurring when the on-chip debug function is used.	pp. 912, 913 ☐
			–	Do not use different soldering methods together (except for partial heating).	pp. 914, 916 ☐
			μPD78F05xxDA	The μPD78F05xxDA has an on-chip debug function, which is provided for development and evaluation. Do not use the on-chip debug function in products designated for mass production, because the guaranteed number of rewritable times of the flash memory may be exceeded when this function is used, and product reliability therefore cannot be guaranteed. Renesas Electronics is not liable for problems occurring when the on-chip debug function is used.	pp. 915, 916
Chapter 36	Soft	Wait	–	When the peripheral hardware clock (f_{PRS}) is stopped, do not access the registers listed above using an access method in which a wait request is issued.	p. 918 ☐

APPENDIX E REVISION HISTORY

E.1 Major Revisions in This Edition

Page	Description	Classification
R01UH0008EJ0400 → R01UH0008EJ0401		
pp. 97, 396, 399, 722, 723	Deletion of **Note**	(c)
p. 93	Change of Recommended Connection of Unused Pins of FLMD0 pin in **Table 2-3. Pin I/O Circuit Types**	(a)
p. 135	Change of **Note 2** of **Table 3-8. Special Function Register List (5/5)**	(c)
U18598JJ3V0UD00 → R01UH0008EJ0400		
Throughout	Deletion of "**recommended**" from **Caution** "**Connect the REGC pin to Vss via a capacitor (0.47 to 1 μF: recommended).**"	(c)
CHAPTER 1 OUTLINE		
p. 41	Change of status of **64-pin plastic FBGA (4x4)** of **78K0/KE2** from under development to mass production	(b)
CHAPTER 2 PIN FUNCTIONS		
p. 69	Change of **2. 1. 3 78K0/KD2 (2) Non-port functions: 78K0/KD2**	(c)
pp. 72, 73	Change of **2. 1. 4 78K0/KE2 (2) Non-port functions: 78K0/KE2**	(c)
p. 93	Change of **Table 2-3. Pin I/O Circuit Types (3/3)**	(c)
CHAPTER 6 CLOCK GENERATOR		
p. 230	Change of **Caution 2** in **Figure 6-3. Format of Clock Operation Mode Select Register (OSCCTL) (78K0/KB2)**	(a)
p. 231	Change of **Caution 2** in **Figure 6-4. Format of Clock Operation Mode Select Register (OSCCTL) (78K0/KC2, 78K0/KD2, 78K0/KE2, and 78K0/KF2)**	(a)
p. 259	Change of **Figure 6-18. CPU Clock Status Transition Diagram (When 1.59 V POC Mode Is Set (Option Byte: POCMODE = 0), 78K0/KC2, 78K0/KD2, 78K0/KE2, and 78K0/KF2)**	(c)
CHAPTER 7 16-BIT TIMER/EVENT COUNTERS 00 AND 01		
p. 299	Change of **Caution** in **7.4.4 Operation in clear & start mode entered by TI00n pin valid edge input**	(c)
CHAPTER 18 SERIAL INTERFACE IIC0		
p. 553	Addition of **Caution** to **Figure 18-3. Format of IIC Shift Register 0 (IIC0)**	(c)
p. 553	Change of description of **18.2 (2) Slave address register 0 (SVA0)**	(c)
p. 557	Addition of **Note** to **Figure 18-5. Format of IIC Control Register 0 (IICC0) (1/4)** and change of **Caution**	(c)
p. 559	Change of **Figure 18-5. Format of IIC Control Register 0 (IICC0) (3/4)**	(c)
p. 560	Change of **Figure 18-5. Format of IIC Control Register 0 (IICC0) (4/4)**	(c)
p. 562	Change of **Figure 18-6. Format of IIC Status Register 0 (IICS0) (2/3)**	(c)
CHAPTER 20 INTERRUPT FUNCTIONS		
p. 634	Change of **(C) External maskable interrupt (INTKR)** in **Figure 20-1 Basic Configuration of Interrupt Function**	(c)
CHAPTER 22 STANDBY FUNCTION		
p. 673	Addition of **Note** to **Figure 22-4. HALT Mode Release by Reset**	(c)
p. 680	Addition of **Note** to **Figure 22-7. STOP Mode Release by Reset**	(c)
CHAPTER 27 FLASH MEMORY		
p. 730	Change of description of **27.6.5 REGC pin**	(c)
p. 755	Addition of **27.11 Creating ROM Code to Place Order for Previously Written Product**	(c)
APPENDIX E REVISION HISTORY		
p. 975	Addition of **C.2 Revision History of Preceding Editions**	(c)

Remark "Classification" in the above table classifies revisions as follows.
(a): Error correction, (b): Addition/change of specifications, (c): Addition/change of description or note, (d): Addition/change of package, part number, or management division, (e): Addition/change of related documents

<R> E.2 Revision History of Preceding Editions

Here is the revision history of the preceding editions. Chapter indicates the chapter of each edition.

(1/4)

Edition	Description	Chapter
3nd Edition	Addition of the conventional-specification products (μPD78F05xx, 78F05xx(A), 78F05xx(A2))	Throughout
	Addition of the (A2) grade products of expanded-specification products (μPD78F05xxA(A2))	
	Addition of the 64-pin plastic FBGA (4x4) package	
	Addition of SM+ tor 78K0	
	Deletion of QB-78K0MINI, PG-FPL3, and FP-LITE3 (because of discontinued products)	
	Addition of **Differences Between Conventional-specification Products and Expanded-specification Products**	**INTRODUCTION**
	Modification of **Related Documents**	
	Addition of **1.1 Differences Between Conventional-specification Products (μPD78F05xx and 78F05xxD) and Expanded-specification Products (μPD78F05xxA and 78F05xxDA)**	**CHAPTER 1 OUTLINE**
	Modification of **1.4 Ordering Information**	
	Modification of **1.8 Outline of Functions**	
	Modification of **Table 3-1 Set Values of Internal Memory Size Switching Register (IMS) (78K0/KB2, and 38-pin products and 44-pin products of the 78K0/KC2)** and **Table 3-2 Set Values of Internal Memory Size Switching Register (IMS) and Internal Expansion RAM Size Switching Register (IXS) (48-pin products of the 78K0/KC2, 78K0/KD2, 78K0/KE2, and 78K0/KF2)**	**CHAPTER 3 CPU ARCHITECTURE**
	Addition of description in **3.2.1 (2) Program status word (PSW)**	
	Modification of **Notes 2 to 4** in **Table 3-8 Special Function Register List (5/5)**	
	Addition of **Caution 2** to **5.2.2 Port 1**	**CHAPTER 5 PORT FUNCTIONS**
	Modification of **Caution** in **Figure 5-17 Block Diagram of P60 and P61** and **Figure 5-18 Block Diagram of P62**	
	Addition of **Caution 2** to **Figure 6-3. Format of Clock Operation Mode Select Register (OSCCTL) (78K0/KB2)** and **Figure 6-4 Format of Clock Operation Mode Select Register (OSCCTL) (78K0/KC2, 78K0/KD2, 78K0/KE2, and 78K0/KF2)**	**CHAPTER 6 CLOCK GENERATOR**
	Modification of **Note 1** in and addition of **Note 2** to **Figure 6-15 Clock Generator Operation When Power Supply Voltage Is Turned On (When 1.59 V POC Mode Is Set (Option Byte: POCMODE = 0))**	
	Addition of **Note** to **Figure 6-17 CPU Clock Status Transition Diagram (When 1.59 V POC Mode Is Set (Option Byte: POCMODE = 0), 78K0/KB2)** and **Figure 6-18 CPU Clock Status Transition Diagram (When 1.59 V POC Mode Is Set (Option Byte: POCMODE = 0), 78K0/KC2, 78K0/KD2, 78K0/KE2, and 78K0/KF2)**	
	Modification of **Note 1** in and addition of **Note 3** to **Figure 7-13 Format of Prescaler Mode Register 00 (PRM00)** and **Figure 7-14 Format of Prescaler Mode Register 01 (PRM01)**	**CHAPTER 7 16-BIT TIMER/EVENT COUNTERS 00 AND 01**
	Modification of description in **(f) 16-bit capture/compare register 00n (CR00n)** in **Figure 7-46 Example of Register Settings for PPG Output Operation (2/2)**	

(2/4)

Edition	Description	Chapter
3nd Edition	Modification of **Note 1** in and addition of **Note 4** to **Figure 8-5 Format of Timer Clock Selection Register 50 (TCL50)** and **Figure 8-6 Format of Timer Clock Selection Register 51 (TCL51)**	**CHAPTER 8 8-BIT TIMER/EVENT COUNTERS 50 AND 51**
	Modification of **Note 1** in and addition of **Note 3** to **Figure 9-5 Format of 8-Bit Timer H Mode Register 0 (TMHMD0)** and **Figure 9-6 Format of 8-Bit Timer H Mode Register 1 (TMHMD1)**	**CHAPTER 9 8-BIT TIMERS H0 AND H1**
	Addition of **Note** to **Figure 10-2 Format of Watch Timer Operation Mode Register (WTM)**	**CHAPTER 10 WATCH TIMER**
	Modification of **Note** and description in **11.1 Functions of Watchdog Timer**	**CHAPTER 11 WATCHDOG TIMER**
	Modification of **Note** and description in **11.4.1 Controlling operation of watchdog timer**	
	Modification of **Remark** in 11.4.3 Setting window open period of watchdog timer	
	Modification of **Note 1** in **Figure 12-3 Format of Clock Output Selection Register (CKS) (78K0/KD2, 48-pin Products of 78K0/KC2)** and **Figure 12-4 Format of Clock Output Selection Register (CKS) (78K0/KE2, 78K0/KF2)**	**CHAPTER 12 CLOCK OUTPUT/BUZZER OUTPUT CONTROLLER**
	Addition of **Table 13-2 A/D Conversion Time Selection (Conventional-specification Products (μPD78F05xx and 78F05xxD))**	**CHAPTER 13 A/D CONVERTER**
	Modification of **Table 13-3 A/D Conversion Time Selection (Expanded-specification Products (μPD78F05xxA and 78F05xxDA))**	
	Modification of **Figure 13-6 Format of 10-Bit A/D Conversion Result Register (ADCR)**	
	Modification of **Note 1** in **Figure 14-4 Format of Baud Rate Generator Control Register 0 (BRGC0)**	**CHAPTER 14 SERIAL INTERFACE UART0**
	Modification of **Note 1** in **Table 14-4 Set Value of TPS01 and TPS00**	
	Modification of **Table 14-5 Set Data of Baud Rate Generator**	
	Modification of **Note 1** in **Figure 15-5 Format of Asynchronous Serial Interface Operation Mode Register 6 (ASIM6) (1/2)**	**CHAPTER 15 SERIAL INTERFACE UART6**
	Modification of **Note 1** in and addition of **Note 3** to **Figure 15-8 Format of Clock Selection Register 6 (CKSR6)**	
	Addition of **Caution 8** to **Figure 15-10 Format of Asynchronous Serial Interface Control Register 6 (ASICL6) (2/2)**	
	Modification of **Note 1** in **15.4.1 (1) Register used**	
	Modification of **Note 1** in and addition of **Note 3** to **Table 15-4 Set Value of TPS63 to TPS60**	
	Modification of **Notes 1** and **2** in **Figure 16-5 Format of Serial Clock Selection Register 10 (CSIC10)** and **Figure 16-6 Format of Serial Clock Selection Register 11 (CSIC11)**	**CHAPTER 16 SERIAL INTERFACES CSI10 AND CSI11**
	Addition of **Note 2** in and modification of **Table 16-2 Relationship Between Register Settings and Pins**	
	Modification of **16.4.2 (5) SO1n output**	

(3/4)

Edition	Description	Chapter
3rd Edition	Addition of **Notes 2** and **5** to and modification of **Note 3** in **Figure 17-3 Format of Serial Status Register 0 (CSIS0) (1/2)**	**CHAPTER 17 SERIAL INTERFACE CSIA0**
	Modification of **Note** in **Figure 17-5 Format of Divisor Selection Register 0 (BRGCA0)**	
	Addition of **Note 1** to **Table 18-2 Selection Clock Setting**	**CHAPTER 18 SERIAL INTERFACE IIC0**
	Modification of **Table 18-4 Bit Definitions of Main Extension Code**	
	Modification of **Figure 18-27 Example of Master to Slave Communication** and **Figure 18-28 Example of Slave to Master Communication**	
	Modification of **Note 1** in **Figure 22-3 HALT Mode Release by Interrupt Request Generation**	**CHAPTER 22 STANDBY FUNCTION**
	Addition of **Caution 5** to **Table 22-3 Operating Statuses in STOP Mode**	
	Modification of **Note 2** in **Figure 22-5 Operation Timing When STOP Mode Is Released (When Unmasked Interrupt Request Is Generated)**	
	Modification of **Note** in **Figure 22-6 STOP Mode Release by Interrupt Request Generation**	
	Modification of **Figure 23-1 Block Diagram of Reset Function**	**CHAPTER 23 RESET FUNCTION**
	Modification of **Notes 3** and **4** in **Table 23-2 Hardware Statuses After Reset Acknowledgment (1/4)**	
	Modification of **Figure 24-1 Block Diagram of Power-on-Clear Circuit**	**CHAPTER 24 POWER-ON-CLEAR CIRCUIT**
	Modification of **Notes 1** and **2** in and addition of **Note 3** to **Figure 24-2 Timing of Generation of Internal Reset Signal by Power-on-Clear Circuit and Low-Voltage Detector (1/2)**	
	Modification of **Note 1** in **Figure 24-2 Timing of Generation of Internal Reset Signal by Power-on-Clear Circuit and Low-Voltage Detector (2/2)**	
	Addition of **Note** to **25.1 Functions of Low-Voltage Detector**	**CHAPTER 25 LOW-VOLTAGE DETECTOR**
	Modification of **Note 4** in and addition of **Caution 4** in **Figure 25-2 Format of Low-Voltage Detection Register (LVIM)**	
	Addition of **Note 2** and **Caution 4** to **Figure 25-3 Format of Low-Voltage Detection Level Selection Register (LVIS)**	
	Modification of **Figure 25-9 Example of Software Processing After Reset Release**	
	Modification of **caution** in **26.1 (2) 0081H/1081H**	**CHAPTER 26 OPTION BYTE**
	Modification of **Note 1** in "**Address: 0081H/1081H**" in **Figure 26-1 Format of Option Byte (2/2)**	
	Modification of **Table 27-1 Internal Memory Size Switching Register Settings**	**CHAPTER 27 FLASH MEMORY**
	Modification of **Caution 2** in **27.2 Internal Expansion RAM Size Switching Register**	
	Modification of **Table 27-2 Internal Expansion RAM Size Switching Register Settings**	
	Modification of **caution** in **27.8 Security Settings**	
	Addition of **Table 27-13 Processing Time for Self Programming Library (Conventional-specification Products (μPD78F05xx and 78F05xxD))**	
	Addition of **Table 27-15. Interrupt Response Time for Self Programming Library (Conventional-specification Products (μPD78F05xx and 78F05xxD))**	
	Modification of **Caution** in **28.1 Connecting QB-MINI2 to μPD78F0503D and 78F0503DA**	**CHAPTER 28 ON-CHIP DEBUG FUNCTION (μPD78F0503D and 78F0503DA ONLY)**
	Addition of **Caution** in **Figure 28-3 Connection of FLMD0 Pin for Self Programming by Means of On-Chip Debugging**	

(4/4)

Edition	Description	Chapter
3rd Edition	Revision of this chapter	**CHAPTER 30 ELECTRICAL SPECIFICATIONS (STANDARD PRODUCTS)**
	Revision of this chapter	**CHAPTER 31 ELECTRICAL SPECIFICATIONS ((A) GRADE PRODUCTS)**
	Addition of this chapter	**CHAPTER 32 ELECTRICAL SPECIFICATIONS ((A2) GRADE PRODUCTS: T_A = –40 to +110°C)**
	Addition of this chapter	**CHAPTER 33 ELECTRICAL SPECIFICATIONS ((A2) GRADE PRODUCTS: T_A = –40 to +125°C)**
	Revision of this chapter	**CHAPTER 35 RECOMMENDED SOLDERING CONDITIONS**
	Revision of this chapter	**APPENDIX A DEVELOPMENT TOOLS**
	Addition of this chapter	**APPENDIX E REVISION HISTORY**

[MEMO]

78K0/Kx2 User's Manual: Hardware

Publication Date: Rev.0.01 January 10, 2008
Rev.4.01 July 15, 2010

Published by: Renesas Electronics Corporation

SALES OFFICES Renesas Electronics Corporation http://www.renesas.com

Refer to "http://www.renesas.com/" for the latest and detailed information.

Renesas Electronics America Inc.
2880 Scott Boulevard Santa Clara, CA 95050-2554, U.S.A.
Tel: +1-408-588-6000, Fax: +1-408-588-6130

Renesas Electronics Canada Limited
1101 Nicholson Road, Newmarket, Ontario L3Y 9C3, Canada
Tel: +1-905-898-5441, Fax: +1-905-898-3220

Renesas Electronics Europe Limited
Dukes Meadow, Millboard Road, Bourne End, Buckinghamshire, SL8 5FH, U.K
Tel: +44-1628-585-100, Fax: +44-1628-585-900

Renesas Electronics Europe GmbH
Arcadiastrasse 10, 40472 Düsseldorf, Germany
Tel: +49-211-65030, Fax: +49-211-6503-1327

Renesas Electronics (China) Co., Ltd.
7th Floor, Quantum Plaza, No.27 ZhiChunLu Haidian District, Beijing 100083, P.R.China
Tel: +86-10-8235-1155, Fax: +86-10-8235-7679

Renesas Electronics (Shanghai) Co., Ltd.
Unit 204, 205, AZIA Center, No.1233 Lujiazui Ring Rd., Pudong District, Shanghai 200120, China
Tel: +86-21-5877-1818, Fax: +86-21-6887-7858 / -7898

Renesas Electronics Hong Kong Limited
Unit 1601-1613, 16/F., Tower 2, Grand Century Place, 193 Prince Edward Road West, Mongkok, Kowloon, Hong Kong
Tel: +852-2886-9318, Fax: +852 2886-9022/9044

Renesas Electronics Taiwan Co., Ltd.
7F, No. 363 Fu Shing North Road Taipei, Taiwan
Tel: +886-2-8175-9600, Fax: +886 2-8175-9670

Renesas Electronics Singapore Pte. Ltd.
1 harbourFront Avenue, #06-10, keppel Bay Tower, Singapore 098632
Tel: +65-6213-0200, Fax: +65-6278-8001

Renesas Electronics Malaysia Sdn.Bhd.
Unit 906, Block B, Menara Amcorp, Amcorp Trade Centre, No. 18, Jln Persiaran Barat, 46050 Petaling Jaya, Selangor Darul Ehsan, Malaysia
Tel: +60-3-7955-9390, Fax: +60-3-7955-9510

Renesas Electronics Korea Co., Ltd.
11F., Samik Lavied' or Bldg., 720-2 Yeoksam-Dong, Kangnam-Ku, Seoul 135-080, Korea
Tel: +82-2-558-3737, Fax: +82-2-558-5141

© 2010 Renesas Electronics Corporation. All rights reserved.

Colophon 1.0

78K0/Kx2

Renesas Electronics Corporation

R01UH0008EJ0401
(Previous Number: U18598EJ3V0UD00)

Mouser Electronics

Authorized Distributor

Click to View Pricing, Inventory, Delivery & Lifecycle Information:

Renesas Electronics:

UPD78F0524AGB(R)-GAG-AX UPD78F0535AGK(S)-GAJ-AX UPD78F0501AMC(S)-CAB-E2-AX UPD78F0545AGC(R)-GAD-AX UPD78F0545AGC(A)-GAD-AX UPD78F0532AGBA2-GAH-G UPD78F0547DAGC-GAD-AX UPD78F0537AGC(R)-GAL-AX UPD78F0547AGCA-GAD-G UPD78F0514AGAA-GAM-G UPD78F0515DAGA-GAM-AX UPD78F0512AGA(S)-GAM-AX UPD78F0536AGB(A)-GAH-AX UPD78F0511AGB(R)-GAF-AX UPD78F0500AMCA2-CAB-G UPD78F0515AGA(S)-GAM-AX UPD78F0512AGA(S)-GAM-E1-AX UPD78F0531AGBA-GAH-G UPD78F0537AGA(R)-HAB-AX UPD78F0546AGK(R)-GAK-AX UPD78F0501AMC(S)-CAB-AX UPD78F0537AGC(S)-GAL-AX UPD78F0501AMC(R)-CAB-AX UPD78F0544AGK(S)-GAK-AX UPD78F0547AGKA-GAK-G UPD78F0502AMC(R)-CAB-AX UPD78F0500AMC-CAB-E1-AX UPD78F0523AGB(R)-GAG-AX UPD78F0537DAGK-GAJ-AX UPD78F0522AGB(R)-GAG-AX UPD78F0511AGA(R)-GAM-AX UPD78F0507AMCA-CAB-G UPD78F0537AGBA-GAH-G UPD78F0525AGB(R)-GAG-AX UPD78F0502AMC(S)-CAB-AX UPD78F0501AMC(S)-CAB-E1-AX UPD78F0534AGC(S)-GAL-AX UPD78F0515AGAA-GAM-G UPD78F0511AMC(S)-GAA-E1-AX UPD78F0537AGB(R)-GAH-AX UPD78F0533AGB(R)-GAH-AX UPD78F0512AGA(R)-GAM-AX UPD78F0513AGB(S)-GAF-AX UPD78F0537AGB(S)-GAH-AX UPD78F0547DAGK-GAK-AX UPD78F0513AMC(S)-GAA-AX UPD78F0532AGA(S)-HAB-AX UPD78F0500AMCA-CAB-G UPD78F0512AGB(S)-GAF-AX UPD78F0533AGK(S)-GAJ-AX UPD78F0544AGC(R)-GAD-AX UPD78F0513AGAA2-GAM-G UPD78F0513AGA(S)-GAM-AX UPD78F0536AGK(S)-GAJ-AX UPD78F0511AGA(S)-GAM-AX UPD78F0531AGB(R)-GAH-AX UPD78F0547AGC(S)-GAD-AX UPD78F0534AGB(R)-GAH-AX UPD78F0527AGB(S)-GAG-AX UPD78F0513AGAA-GAM-G UPD78F0503AMC(S)-CAB-AX UPD78F0535AGC(S)-GAL-AX UPD78F0512AMC(S)-GAA-AX UPD78F0511AMCA-GAA-G UPD78F0547AGK(R)-GAK-AX UPD78F0511AMC(S)-GAA-AX UPD78F0547AGC(R)-GAD-AX UPD78F0511AGB(S)-GAF-AX UPD78F0515AGA(R)-GAM-E1-AX UPD78F0511AGAA-GAM-G UPD78F0521AGB(S)-GAG-AX UPD78F0524AGB(S)-GAG-AX UPD78F0547AGK(R)-GAK-E1-AX UPD78F0511AGBA-GAF-G UPD78F0515AGA(R)-GAM-AX UPD78F0512AGAA-GAM-G UPD78F0513DAGB-GAF-AX UPD78F0513AGA(R)-GAM-AX UPD78F0513AGB(R)-GAF-AX UPD78F0532AGBA-GAH-G UPD78F0513AMC(S)-GAA-E1-AX UPD78F0515AGA-GAM-E1-AX UPD78F0545AGCA-GAD-G UPD78F0525AGB(S)-GAG-AX UPD78F0513AMCA-GAA-G UPD78F0513AGBA-GAF-G UPD78F0503AMC(R)-CAB-AX UPD78F0512AMC(S)-GAA-E1-AX UPD78F0500AMC(S)-CAB-AX UPD78F0535AGB(S)-GAH-AX

UPD78F0535AGK(R)-GAJ-AX UPD78F0534AGA(S)-HAB-AX UPD78F0544AGK(R)-GAK-AX UPD78F0533AGB(S)-GAH-AX UPD78F0537AGB-GAH-E1-AX UPD78F0500AMC(R)-CAB-AX UPD78F0546AGC(S)-GAD-AX UPD78F0514AGA-GAM-E2-AX UPD78F0514AGA(R)-GAM-AX UPD78F0513AGA-8EU-AT