CUI Devices is now Same Sky! Learn More

SERIES: RCJ-05 | DESCRIPTION: RCA JACK

FEATURES

- through hole
- 2 conductors, 2 contacts



RoHS

PART NUMBER KEY

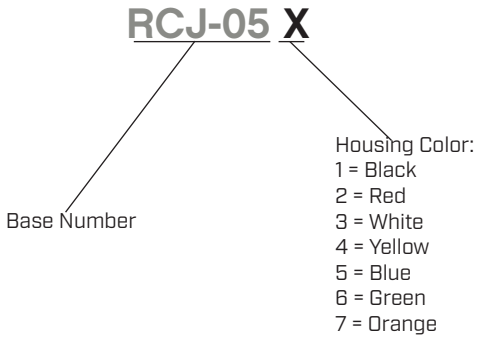

SPECIFICATIONS

parameter	conditions/description	min	typ	max	units
contact resistance				30	mΩ
insulation resistance	at 500 Vdc	100			MΩ
voltage withstand	for 1 minute			500	Vac
life			5,000		cycles
operating temperature		-20		85	°C
flammability rating	UL94V-0				
RoHS	yes				

MECHANICAL DRAWING

units: mm
tolerance: ±0.3 mm

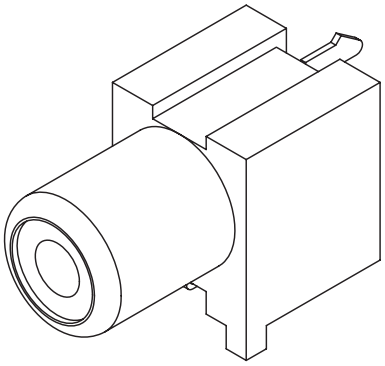

	MATERIAL	PLATING
terminal 1	brass	nickel
terminal 2	brass	tin
housing	PA66	nickel

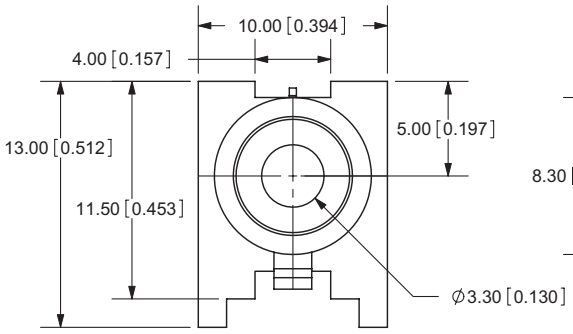

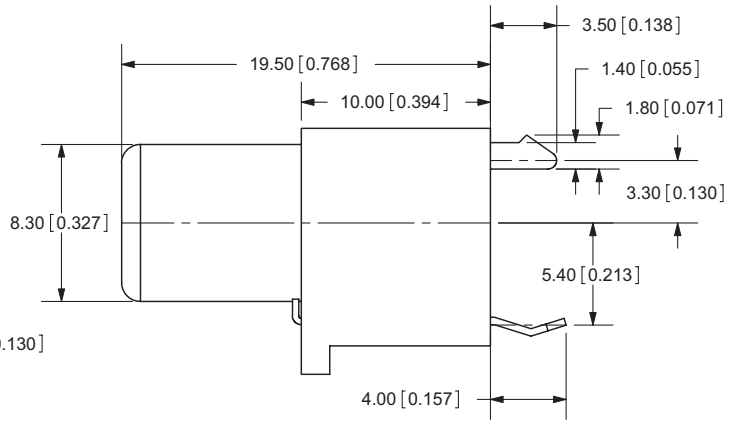

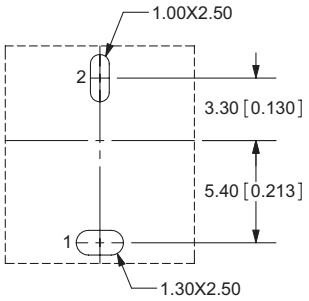

Recommended PCB Layout
Top View

Model No.	RCJ-05
Schematic	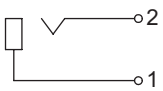

REVISION HISTORY

rev.	description	date
1.0	initial release	04/11/2006
1.01	title corrected from right angle to vertical	05/11/2009
1.02	brand update	06/11/2020
1.03	logo, datasheet style update	11/21/2022
1.04	CUI Devices rebranded to Same Sky	09/12/2024

The revision history provided is for informational purposes only and is believed to be accurate.

same sky

Same Sky offers a one (1) year limited warranty. Complete warranty information is listed on our website.

Same Sky reserves the right to make changes to the product at any time without notice. Information provided by Same Sky is believed to be accurate and reliable. However, no responsibility is assumed by Same Sky for its use, nor for any infringements of patents or other rights of third parties which may result from its use.

Same Sky products are not authorized or warranted for use as critical components in equipment that requires an extremely high level of reliability. A critical component is any component of a life support device or system whose failure to perform can be reasonably expected to cause the failure of the life support device or system, or to affect its safety or effectiveness.

sameskydevices.com