CUI Devices is now Same Sky! Learn More

same sky

MODEL: SP-25502-OM | DESCRIPTION: AUDIO PLUG

FEATURES

- 2.5 mm audio standard
- 5 conductor with outer ring
- designed for overmolding



RoHS

SPECIFICATIONS

parameter	conditions/description	min	typ	max	units
rated input voltage			12		Vdc
rated input current				1	A
contact resistance	between plug and jack			100	mΩ
insulation resistance	at 100 Vdc	50			MΩ
voltage withstand	for 1 minute			200	Vac
insertion force	when mating with a standard jack	0.4		4	kgf
withdrawal force	when mating with a standard jack	0.4		4	kgf
operating temperature		-25		70	°C
operating humidity				85	%
life			5,000		cycles
flammability rating	see material table				
RoHS	yes				

SOLDERABILITY

parameter	conditions/description	min	typ	max	units
hand soldering	for maximum 1 second	380	400	420	°C

MECHANICAL DRAWING

units: mm
tolerance:
X≤1.0: ±0.1 mm
1.0<X≤6.0: ±0.2 mm
6.0<X≤12.0: ±0.3 mm
12.0<X≤25.0: ±0.4 mm
X>25.0: ±0.5 mm
unless otherwise noted

ITEM	DESCRIPTION	MATERIAL	PLATING/COLOR
1	tip	brass	nickel
2	insulator	POM (UL94HB)	black
3	ring 1	brass	nickel
4	insulator	POM (UL94HB)	black
5	ring 2	brass	nickel
6	outer ring	brass	nickel
7	ring 1 terminal	phosphor bronze	nickel
8	ring 2 terminal	phosphor bronze	gold
9	sleeve	brass	nickel
10	insulator	POM (UL94HB)	yellow

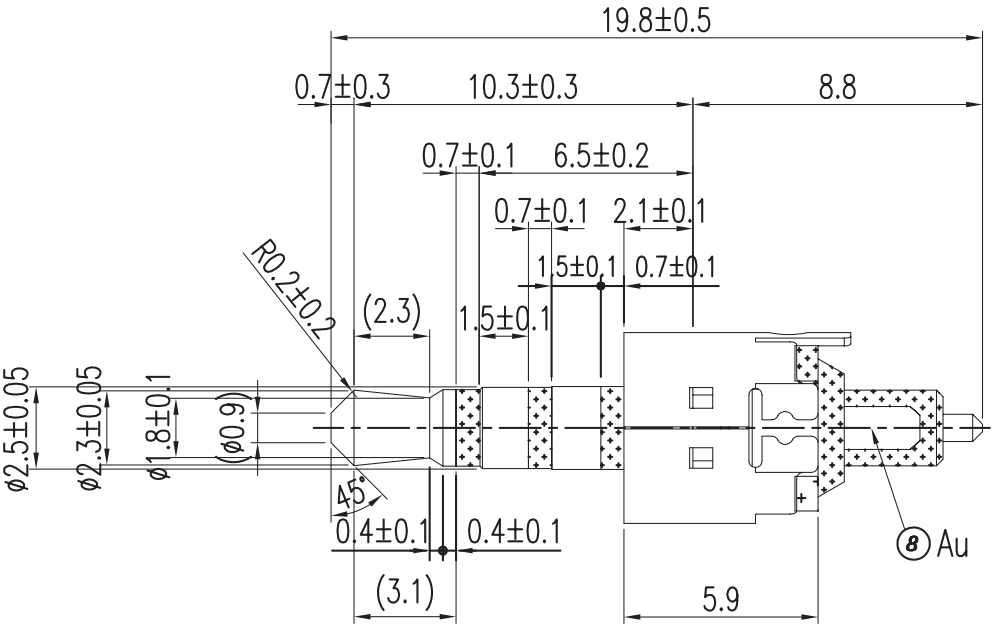

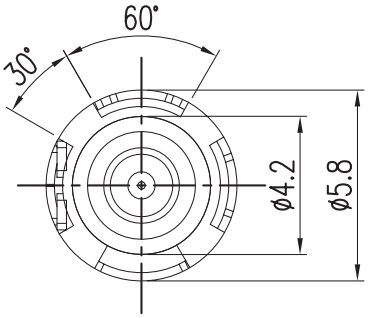

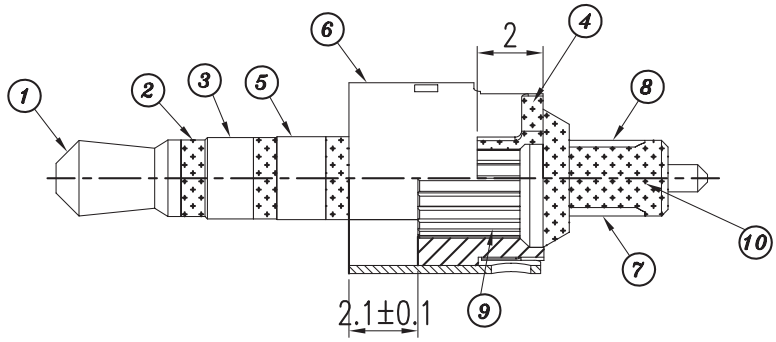

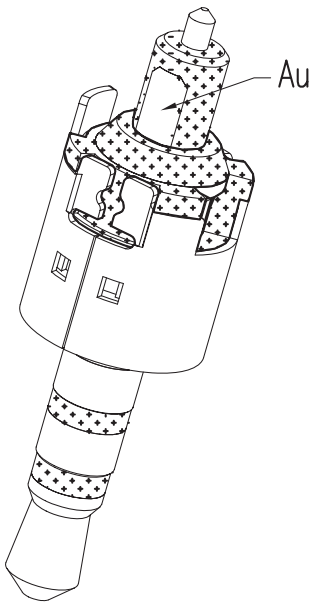

REVISION HISTORY

rev.	description	date
1.0	initial release	07/17/2020
1.01	logo, datasheet style update	08/16/2022
1.02	CUI Devices rebranded to Same Sky	09/12/2024

The revision history provided is for informational purposes only and is believed to be accurate.

Same Sky offers a one (1) year limited warranty. Complete warranty information is listed on our website.

Same Sky reserves the right to make changes to the product at any time without notice. Information provided by Same Sky is believed to be accurate and reliable. However, no responsibility is assumed by Same Sky for its use, nor for any infringements of patents or other rights of third parties which may result from its use.

Same Sky products are not authorized or warranted for use as critical components in equipment that requires an extremely high level of reliability. A critical component is any component of a life support device or system whose failure to perform can be reasonably expected to cause the failure of the life support device or system, or to affect its safety or effectiveness.

sameskydevices.com