Multilayer Ceramic Capacitor

- General -

SAMSUNG ELECTRO-MECHANICS

Multilayer Ceramic Capacitor - General

■ INTRODUCTION

MLCC(Multilayer Ceramic Capacitor) is SMD(Surface Mounted Device) type capacitor that is used in wide ranges of capacitance. MLCC is paid more attentions than other capacitors due to the better frequency characteristics, higher reliability, higher withstanding voltage and so on.
MLCC is made of many layers of ceramic and inner electrodes like sandwich. Pd was used for inner electrodes. But the price of Pd was skyrocketed and Pd was replaced by the BME(Base Metal Electrode), which reduced the total cost of MLCC.
This inner electrode is connected to outer termination for surface mounting, which is composed of three layers, Cu or Ag layer, Ni plating layer, and SnPb or Sn plating layer. Most of MLCCs become Pb free by the environmental issue at present.

■ FEATURE AND APPLICATION

● Feature

- Miniature Size
- Wide Capacitance and Voltage Range
- Tape & Reel for Surface Mount Assembly
- Low ESR

● Application

- General Electronic Circuit

■ STRUCTURE

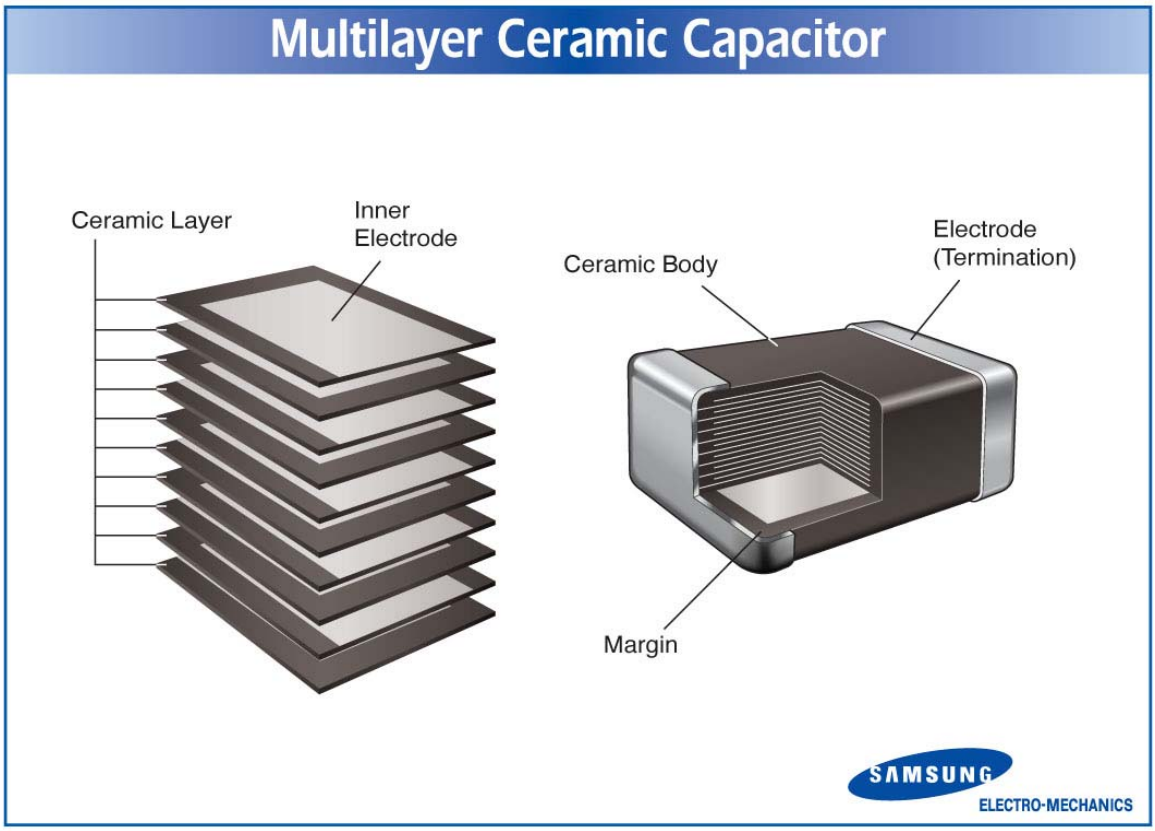
Multilayer Ceramic Capacitor
Ceramic Layer
Inner Electrode
Ceramic Body
Electrode (Termination)
Margin
SAMSUNG ELECTRO-MECHANICS

■ APPEARANCE AND DIMENSION

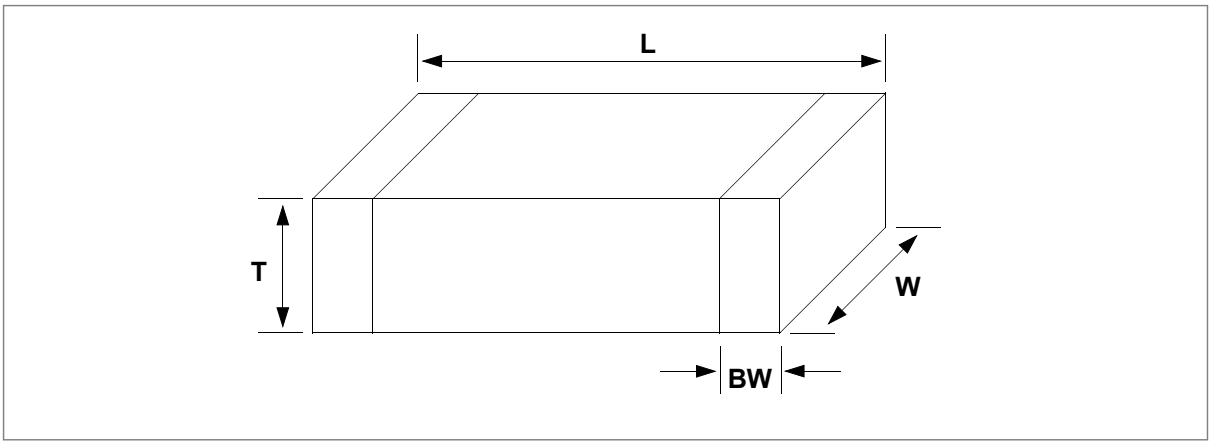

CODE	EIA CODE	DIMENSION (mm)			
		L	W	T (MAX)	BW
03	0201	0.6 ± 0.03	0.3 ± 0.03	0.3 ± 0.03	0.15±0.05
05	0402	1.0 ± 0.05	0.5 ± 0.05	0.5 ± 0.05	0.2+0.15/-0.1
10	0603	1.6 ± 0.1	0.8 ± 0.1	0.8 ± 0.1	0.3 ± 0.2
21	0805	2.0 ± 0.1	1.25 ± 0.1	1.25± 0.1	0.5+0.2/-0.3
31	1206	3.2 ± 0.2	1.6 ± 0.2	1.6 ± 0.2	0.5+0.2/-0.3
32	1210	3.2 ± 0.3	2.5 ± 0.2	2.5 ± 0.2	0.6 ± 0.3
43	1812	4.5 ± 0.4	3.2 ± 0.3	3.2 ± 0.3	0.8 ± 0.3
55	2220	5.7 ± 0.4	5.0 ± 0.4	3.2 ± 0.3	1.0 ± 0.3

■ PREVIOUS PART NUMBERING

CL	10	C	101	J	B	N	C
❶	❷	❸	❹	❺	❻	❼	❽

❶ SAMSUNG Multilayer Ceramic Capacitor
❷ Type(Size)
❸ Capacitance Temperature Characteristics
❹ Nominal Capacitance
❺ Capacitance Tolerance
❻ Rated Voltage
❼ Thickness Option
❽ Packaging Type

❸ CAPACITANCE TEMPERATURE CHARACTERISTIC

▶ **CLASS Ⅰ(Temperature Compensation)**

Symble	EIA Code	Temperature Coefficient(PPM/℃)	※ Temperature Characteristics	Operation Temperature Range
C	C0G	0 ± 30	CΔ	-55 ~ +125℃
P	PH	-150 ± 60	PΔ	
R	RH	-220 ± 60	RΔ	
S	SH	-330 ± 60	SΔ	
T	TH	-470 ± 60	TΔ	
U	UJ	-750 ± 120	UΔ	
L	SL	+350 ~ -1000	SL	

※ Temperature Characteristics

Temperature Characteristics	below 2.0pF	2.2 ~ 3.9pF	above 4.0pF	above 10pF
CΔ	C0G	C0G	C0G	C0G
PΔ	-	PJ	PH	PH
RΔ	-	RJ	RH	RH
SΔ	-	SJ	SH	SH
TΔ	-	TJ	TH	TH
UΔ	-	UJ	UJ	UJ

☞ J : ±120 PPM/℃
H : ±60 PPM/℃
G : ±30 PPM/℃

▶ **CLASS Ⅱ(High Dielectric Constant)**

Symble	EIA Code	Capacitance Change (ΔC : %)	Operation Temperature Range
A	X5R	± 15	-55 ~ +85℃
B	X7R	± 15	-55 ~ +125℃
F	Y5V	+22 ~ -82	-30 ~ +85℃

❹ NOMINAL CAPACITANCE

The nominal capacitance value is expressed in pico-Farad(pF) and identified by three-digit number, first two digits represent significant figures and last digit specifies the number of zeros to follow. For values below 1pF, the letter "R" is used as the decimal point and the last digit becomes significant.

example)

100 : 10×10^0 = 10pF
102 : 10×10^2 = 1000pF
020 : 2×10^0 = 2pF
1R5 : 1.5pF

❺ CAPACITANCE TOLERANCE

Temperature Characteristics	Symbol	Tolerance	Applicable Capacitance & Range
C0G(NPO) or T.C Series	A	± 0.05pF	0.5 ~ 3pF
	B	± 0.1pF	
	C	± 0.25pF	0.5 ~ 10pF
	D	± 0.5pF	
	F	± 1pF	6 ~ 10pF
	F	± 1%	E-24 Series for over 10pF
	G	± 2%	
	J	± 5%	
	K	± 10%	
A(X5R) B(X7R)	J	± 5%	E-12 Series
	K	± 10%	
	M	± 20%	
F(Y5V)	Z	-20% ~ +80%	E-6 Series

※ Please Consult us for special tolerances.

❻ RATED VOLTAGE

Symbol	Rated Voltage(Vdc)	Symbol	Rated Voltage(Vdc)
R	4V	C	100V
Q	6.3V	D	200V
P	10V	G	500V
O	16V	I	1000V
A	25V	J	2000V
B	50V	K	3000V

❼ THICKNESS OPTION

Symbol	Description of the Code
N	Standard thickness (please refer to standard thickness table on next page)
A	Thinner than standard thickness
B	Thicker than standard thickness
C	Standard Thickness High Q (Low ` D.F `)
D	Sn-100% (High-Q)
E	Sn-100% (General)

※ Please Consult us for other termination type.

❽ PACKAGING TYPE

Symbol	Packaging	Symbol	Packaging
B	Bulk	F	Embossed Tape, 13" Reel
P	Cassette	L	Paper 13" Reel
C	Paper Tape, 7" Reel	O	Paper 10" Reel
D	Paper Tape, 13" Reel	S	Embossed Tape, 10" Reel
E	Embossed Tape, 7" Reel		

▶ STANDARD CAPACITANCE STEP

Series	Capacitance Step											
E- 3	1.0				2.2				4.7			
E- 6	1.0		1.5		2.2		3.3		4.7		6.8	
E-12	1.0	1.2	1.5	1.8	2.2	2.7	3.3	3.9	4.7	5.6	6.8	8.2
E-24	1.0	1.2	1.5	1.8	2.2	2.7	3.3	3.9	4.7	5.6	6.8	8.2
	1.1	1.3	1.6	2.0	2.4	3.0	3.6	4.3	5.1	6.2	7.5	9.1

※ Standard Capacitance is " Each step $\times 10^{n}$ "

■ NEW PART NUMBERING

CL	10	C	101	J	B	8	N	N	N	C
❶	❷	❸	❹	❺	❻	❼	❽	❾	❿	⓫

❶ SAMSUNG Multilayer Ceramic Capacitor
❷ Size(mm)
❸ Capacitance Temperature Characteristic
❹ Nominal Capacitance
❺ Capacitance Tolerance
❻ Rated Voltage
❼ Thickness Option
❽ Product & Plating Method
❾ Samsung Control Code
❿ Reserved For Future Use
⓫ Packaging Type

❶ PRODUCT ABBREVIATION

Symbol	Product Abbreviation
CL	SAMSUNG Multilayer Ceramic Capacitor

❷ SIZE(mm)

Symbol	Size(mm)	
	Length	Width
03	0.6	0.3
05	1.0	0.5
10	1.6	0.8
21	2.0	1.2
31	3.2	1.6
32	3.2	2.5
43	4.5	3.2
55	5.7	5.0

❸ CAPACITANCE TEMPERATURE CHARACTERISTIC

Symbol	Temperature Characteristics				Temperature Range
C	Class Ⅰ	COG	C△	0±30(ppm/℃)	-55 ~ +125℃
P		P2H	P△	-150±60	
R		R2H	R△	-220±60	
S		S2H	S△	-330±60	
T		T2H	T△	-470±60	
U		U2J	U△	-750±60	
L		S2L	S△	+350 ~ -1000	
A	Class Ⅱ	X5R	X5R	±15%	-55 ~ +85℃
B		X7R	X7R	±15%	-55 ~ +125℃
F		Y5V	Y5V	+22 ~ -82%	-30 ~ +85℃

※ Temperature Characteristic

Temperature Characteristics	Below 2.0pF	2.2 ~ 3.9pF	Above 4.0pF	Above 10pF
CΔ	C0G	C0G	C0G	C0G
PΔ	-	P2J	P2H	P2H
RΔ	-	R2J	R2H	R2H
SΔ	-	S2J	S2H	S2H
TΔ	-	T2J	T2H	T2H
UΔ	-	U2J	U2J	U2J

J : ±120PPM/℃, H : ±60PPM/℃, G : ±30PPM/℃

❹ NOMINAL CAPACITANCE

Nominal capacitance is identified by 3 digits.

The first and second digits identify the first and second significant figures of the capacitance.

The third digit identifies the multiplier. 'R' identifies a decimal point.

● **Example**

Symbol	Nominal Capacitance
1R5	1.5pF
103	10,000pF, 10nF, 0.01μF
104	100,000pF, 100nF, 0.1μF

❺ CAPACITANCE TOLERANCE

Symbol	Tolerance	Nominal Capacitance
A	±0.05pF	Less than 10pF (Including 10pF)
B	±0.1pF	
C	±0.25pF	
D	±0.5pF	
F	±1pF	
F	±1%	More than 10pF
G	±2%	
J	±5%	
K	±10%	
M	±20%	
Z	+80, -20%	

❻ RATED VOLTAGE

Symbol	Rated Voltage	Symbol	Rated Voltage
Q	6.3V	E	250V
P	10V	G	500V
O	16V	H	630V
A	25V	I	1,000V
B	50V	J	2,000V
C	100V	K	3,000V
D	200V		

❼ THICKNESS OPTION

Type	Symbol	Thickness(T)	Spec
0603	**3**	0.30	±0.03
1005	**5**	0.50	±0.05
1608	**8**	0.80	±0.10
2012	**A**	0.65	±0.10
	C	0.85	
	F	1.25	±0.10
3216	**C**	0.85	±0.15
	F	1.25	±0.15
	H	1.6	±0.20
3225	**F**	1.25	±0.20
	H	1.6	
	I	2.0	
	J	2.5	
4532	**F**	1.25	±0.20
	H	1.6	
	I	2.0	
	J	2.5	
	L	3.2	±0.30
5750	**F**	1.25	±0.20
	H	1.6	
	I	2.0	
	J	2.5	
	L	3.2	±0.30

❽ PRODUCT & PLATING METHOD

Symbol	Electrode	Termination	Plating Type
A	Pd	Ag	Sn_100%
N	Ni	Cu	Sn_100%
G	Cu	Cu	Sn_100%

❾ SAMSUNG CONTROL CODE

Symbol	Description of the code	Symbol	Description of the code
A	Array (2-element)	**N**	Normal
B	Array (4-element)	**P**	Automotive
C	High - Q	**W**	3 Terminal EMI Filter
L	LICC		

❿ RESERVED FOR FUTURE USE

Symbol	Description of the code
N	Reserved for future use

⓫ PACKAGING TYPE

Symbol	Packaging Type	Symbol	Packaging Type
B	Bulk	**F**	Embossing 13" (10,000EA)
P	Bulk Case	**L**	Paper 13" (15,000EA)
C	Paper 7"	**O**	Paper 10"
D	Paper 13" (10,000EA)	**S**	Embossing 10"
E	Embossing 7"		

▶ CAPACITANCE vs CHIP THICKNESS STANDARD

Description			0603 (0201)	1005 (0402)	1608 (0603)	2012 Type (0805)			3216 Type (1206)			3225 Type (1210)				4532 Type (1812)				5750 Type (2220)		
Dimension (mm)		L	0.6 ±0.03	1.0 ±0.05	1.6 ±0.1	2.0±0.1			3.2±0.15		3.2 ±0.2	3.2±0.3				4.5±0.4				5.7±0.4		
		W	0.3 ±0.03	0.5 ±0.05	0.8 ±0.1	1.25±0.1			1.6±0.15		1.6 ±0.2	2.5±0.2				3.2±0.3				5.0±0.4		
		T	0.3 ±0.03	0.5~ ±0.05	0.8 ±0.1	0.65 ±0.1	0.85 ±0.1	1.25 ±0.1	0.85 ±0.15	1.25 ±0.15	1.6 ±0.2	1.25 ±0.2	1.6 ±0.2	2.0 ±0.2	2.5 ±0.2	1.25 ±0.2	1.6 ±0.2	2.0 ±0.2	2.5 ±0.2	1.6 ±0.2	2.0 ±0.2	2.5 ±0.2
CAPACITANCE RANGE (pF)	SL	50V	-	0.5~ 240	0.5 ~ 1000	0.5 ~1000	1100 ~ 1500	1600~ 2700	0.5 ~ 2700	3000~ 5600	6200~ 8200	-	-	-	-	-	-	-	-	-	-	-
	C, TC (Except SL,UJ)	25V	0.5~ 47	0.5~ 220	0.5 ~ 1000	-	-	3300~ 8200	1500~ 3600	3900~ 6800	7500~ 10000	-	-	-	-	-	100000	-	-	-	-	-
		50V	-	0.5 ~ 180	0.5 ~ 1000	0.5 ~ 560	620~ 1000	1100~ 3300	0.5 ~ 2200	2400~ 4700	-	560~ 10000	11000 ~ 22000	24000~ 47000	-	1000~ 13000	15000~ 22000	24000~ 47000	62000~ 68000	43000	93000	130000
CAPACITANCE RANGE (nF)	A (X5R)	6.3V	10	220	2200	-	-	10000	-	-	10000	-	-	-	22000	-	-	-	47000	-	-	47000
		10V	10	100	1000	-	-	2200	-	-	4700~ 10000	-	-	-	22000	-	-	-	-	-	-	47000
		16V	-	47	330~ 470	-	-	1000	-	-	4700	-	-	-	6800~ 10000	-	-	-	-	-	-	-
		25V	-	-	-	-	-	-	-	-	-	-	-	-	-	-	-	-	-	-	-	-
		50V	-	6.8~ 10	-	-	-	-	-	-	-	-	-	-	-	-	-	-	-	-	-	-
	B (X7R)	6.3V	0.1~ 10	47~ 100	470~ 1000	-	-	1000	-	-	6800~ 10000	-	-	-	22000	-	-	-	-	-	-	-
		10V	0.1~ 10	33~ 100	220~ 470	220~ 270	330~ 470	560~ 1000	-	1000~ 3300	4700	1500~ 2200	3300	3900~ 4700	-	-	-	-	22000	-	-	-
		16V	0.1~ 1	10~ 33	100~ 220	68~ 200	220~ 330	390~ 1000	330~ 680	1000~ 1500	2200~ 3300	1500~ 2200	3300	3900~ 4700	-	-	-	2200	-	-	-	-
		25V	-	4.7~ 10	47~ 100	39~ 68	82~ 100	150~ 470	100~ 330	470~ 620	680~ 1000	680~ 1500	1800	2200	-	-	-	1000	-	-	-	10000
		50V	-	0.22~ 4.7	0.22~ 100	0.22~ 39	47~ 100	220	1~ 150	220	390~ 1000	2.2~ 680	820~ 1000	-	-	10~ 1000	-	-	-	-	-	3300~ 4700
	F (Y5V)	6.3V	10~ 100	-	2200	-	-	10000	-	-	-	-	-	47000	-	-	-	-	-	-	-	-
		10V	-	220~ 330	100~ 1000	-	-	4700	-	4700	10000~ 22000	-	-	-	22000	-	-	-	-	-	-	100000
		16V	-	10~ 220	100~ 1000	10~ 680	820~ 1000	1200~ 2200	1000~ 2200	2700~ 4700	10000	3300~ 6800	10000	15000	-	-	-	22000	-	-	-	-
		25V	-	10~ 33	22~ 330	10~ 220	270~ 470	560~ 1000	470~ 1000	1200~ 2200	2700~ 3300	1000~ 3300	4700~ 10000	-	-	-	-	-	10000	-	-	-
		50V	-	2.2~ 10	2.2~ 100	2.2~ 68	82~ 150	180~ 1000	10~ 470	560~ 1000	-	100~ 1000	-	-	-	-	-	-	10000	-	-	-

■ PACKAGING

● CARDBOARD PAPER TAPE

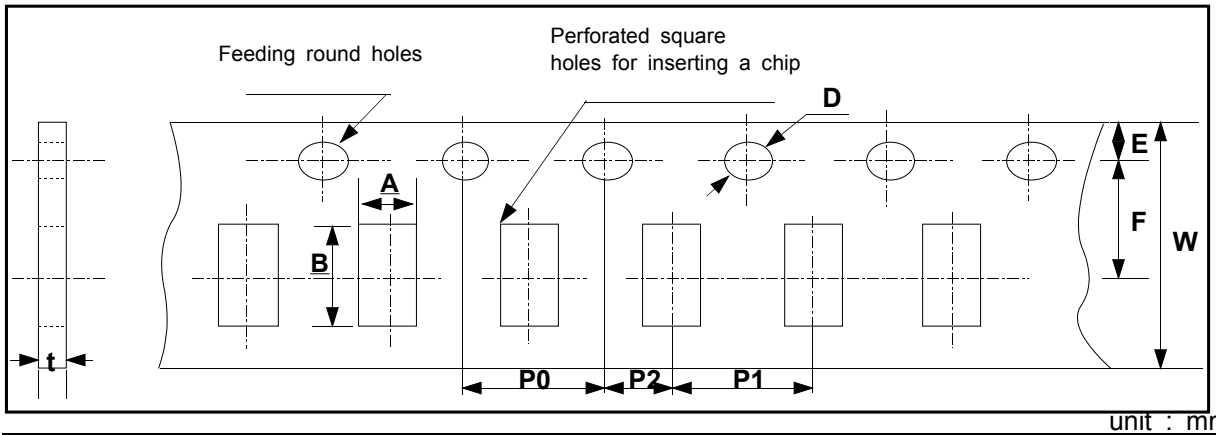

unit : mm

Symbol / Type		W	F	E	P1	P2	P0	D	t	A	B
Dimension	03	8.0 ±0.3	3.5 ±0.05	1.75 ±0.1	2.0 ±0.05	2.0 ±0.05	4.0 ±0.1	Φ1.5 +0.1/-0	0.37 ±0.03	0.38 ±0.03	0.68 ±0.03
	05								0.6 ±0.05	0.65 +0.05/-0.1	1.15 +0.05/-0.1
	10				4.0 ±0.1				1.1 MAX	1.1 ±0.2	1.9 ±0.2
	21									1.6 ±0.2	2.4 ±0.2
	31									2.0 ±0.2	3.6 ±0.2

● EMBOSSED PLASTIC TAPE

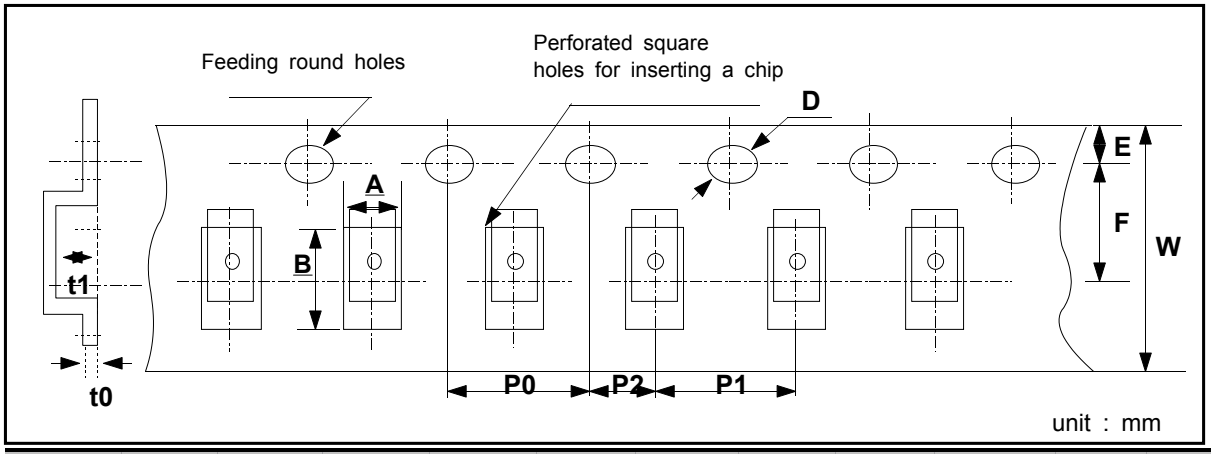

unit : mm

Symbol / Type		W	F	E	P1	P2	P0	D	t0	t1	A	B
Dimension	21	8.0 ±0.3	3.5 ±0.05	1.75 ±0.1	4.0 ±0.1	2.0 ±0.05	4.0 ±0.1	Φ1.5 +0.1/-0	0.6 max	2.5 max	1.45 ±0.2	2.3 ±0.2
	31										2.0 ±0.2	3.6 ±0.2
	32										2.9 ±0.2	3.6 ±0.2
	43										3.6 ±0.2	4.9 ±0.2
	55										5.4 ±0.2	6.0 ±0.2

● TAPING SIZE

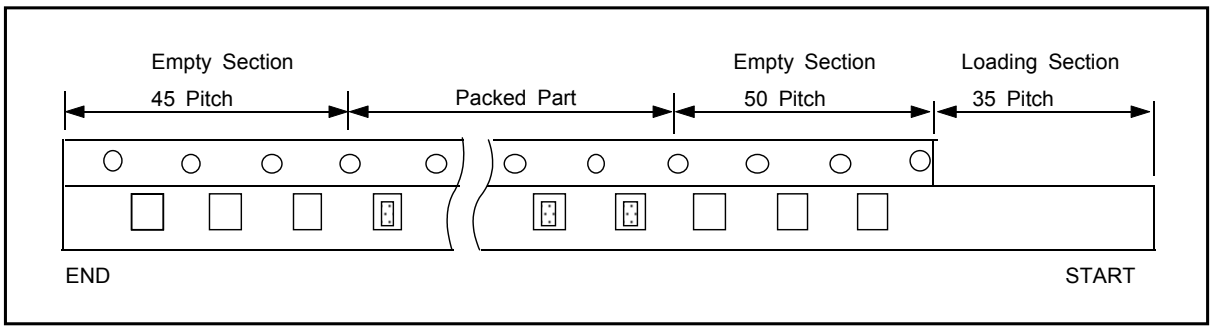

unit : pcs

Symbol	Cardboard Paper Tape	Embossed Plastic Tape
7" Reel	4000	2000
13" Reel	15000	-

● REEL DIMENSION

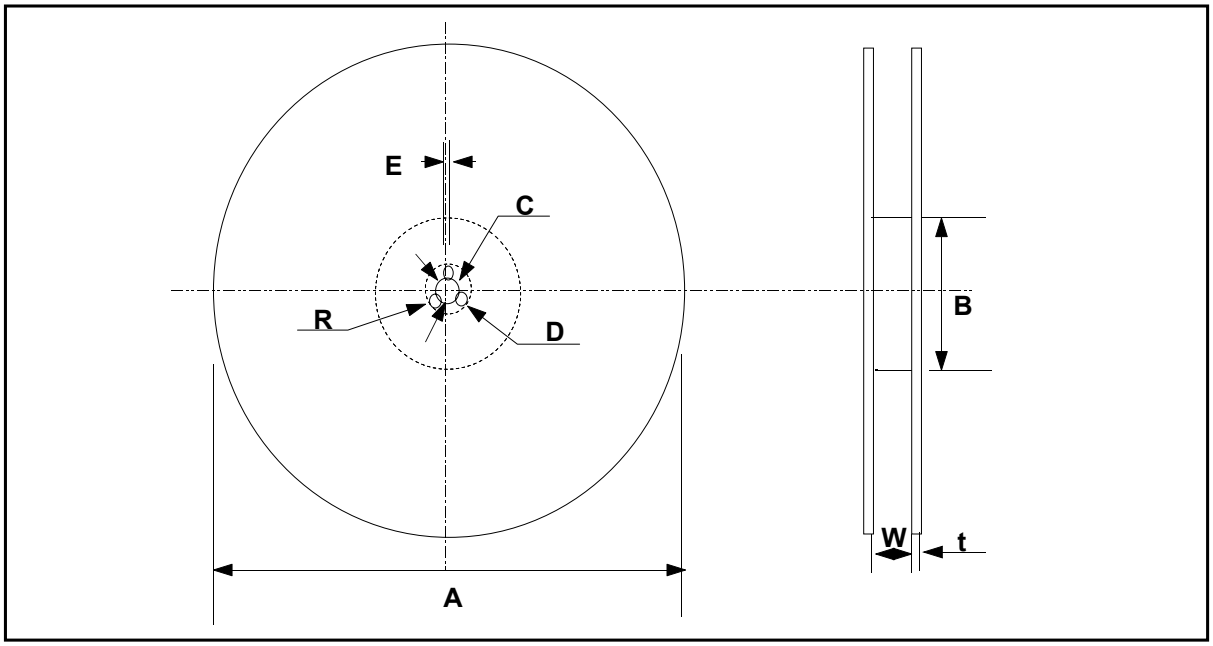

unit : mm

Symbol	A	B	C	D	E	W	t	R
7" Reel	ϕ178±2.0	min.ϕ50	ϕ13±0.5	21±0.8	2.0±0.5	10±1.5	0.8±0.2	1.0
13" Reel	ϕ330±2.0	min.ϕ70						

● BULK CASE PACKAGING

- Bulk case packaging can reduce the stock space and transportation costs.
- The bulk feeding system can increase the productivity.
- It can eliminate the components loss.

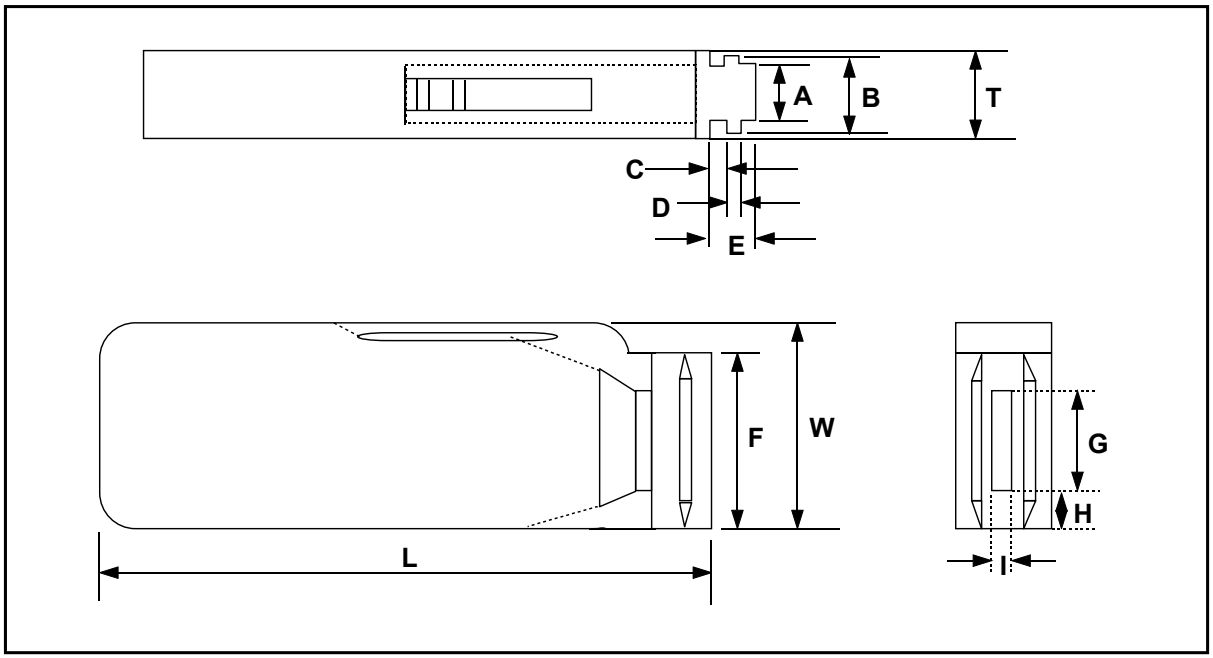

Symbol	A	B	T	C	D	E
Dimension	6.8±0.1	8.8±0.1	12±0.1	1.5+0.1/-0	2+0/-0.1	4.7±0.1

Symbol	F	W	G	H	L	I
Dimension	31.5+0.2/-0	36+0/-0.2	19±0.35	7±0.35	110±0.7	5±0.35

● QUANTITY

Size	05(0402)	10(0603)	21(0805)	
			T≤0.85mm	T≥1.0mm
Quantity	50,000	10,000~15,000*	10,000	5,000

* Option

■ CHARACTERISTIC MAP

● CLASS Ⅰ

Temperature Characteristics	Size	Voltage	Capacitance Range (pF)
SL,UJ	05 (0402)	50V	240
	10 (0603)	50V	1000
	21 (0805)	50V	2700
	31 (1206)	50V	8200
C(COG) & TC Series	03 (0201)	25V	47
	05 (0402)	25V	220
		50V	180
	10 (0603)	25V	1000
		50V	1000
	21 (0805)	25V	3300 8200
		50V	3300
	31 (1206)	25V	1500 10000
		50V	4700
	32 (1210)	50V	560 47000
		100V	4700 18000
	43 (1812)	25V	100000
		50V	1000 68000
	55 (2220)	50V	43000 130000

Capacitance Range (pF): 0.5 10 100 1000 10000 100000 1000000 10000000 100000000

● CLASS Ⅱ , A(X5R)

Temperature Characteristics	Size	Voltage	Capacitance Range (pF)
			10 100 1000 10000 100000 1000000 10000000 100000000
A(X5R)	0603 (0201)	6.3V	10000
		10V	10000
	1005 (0402)	6.3V	220000
		10V	100000
		16V	47000
		50V	6800 10000
	1608 (0603)	6.3V	2200000
		10V	1000000
		16V	330000 470000
	2012 (0805)	6.3V	10000000
		10V	2200000
		16V	1000000
	3216 (1206)	6.3V	10000000
		10V	4700000 10000000
		16V	4700000
	3225 (1210)	6.3V	22000000
		10V	22000000
		16V	6800000 10000000
	4532 (1812)	6.3V	47000000
	5750 (2220)	6.3V	47000000
		10V	47000000

● **CLASS Ⅱ , B(X7R)**

Temperature Characteristics	Size	Voltage	Capacitance Range (pF)
B(X7R)	03 (0201)	6.3V	100 – 10000
		10V	100 – 10000
		16V	100 – 1000
	05 (0402)	6.3V	47000 – 100000
		10V	33000 – 100000
		16V	10000 – 33000
		25V	4700 – 10000
		50V	220 – 4700
	10 (0603)	6.3V	470000 – 1000000
		10V	220000 – 470000
		16V	100000 – 220000
		25V	47000 – 100000
		50V	220 – 100000
	21 (0805)	6.3V	1000000
		10V	220000 – 1000000
		16V	68000 – 1000000
		25V	39000 – 470000
		50V	220 – 220000
	31 (1206)	6.3V	6800000 – 10000000
		10V	1000000 – 4700000
		16V	330000 – 3300000
		25V	100000 – 1000000
		50V	1000 – 1000000

● **CLASS Ⅱ , B(X7R)**

Temperature Characteristics	Size	Voltage	Capacitance Range (pF)
			10 100 1000 10000 100000 1000000 10000000 100000000
B(X7R)	32 (1210)	6.3V	22000000
		10V	1500000 4700000
		16V	1500000 4700000
		25V	680000 2200000
		50V	2200 1000000
	43 (1812)	10V	22000000
		16V	2200000
		25V	1000000
		50V	10000 1000000
	55 (2220)	25V	10000000
		50V	3300000 4700000

● **CLASS Ⅱ , F(Y5V)**

Temperature Characteristics	Size	Voltage	Capacitance Range (pF)
F(Y5V)	03 (0201)	6.3V	10000 – 100000
	05 (0402)	10 V	220000 – 330000
		16 V	10000 – 220000
		25 V	10000 – 33000
		50 V	2200 – 10000
	10 (0603)	6.3V	2200000
		10 V	100000 – 1000000
		16 V	100000 – 1000000
		25 V	22000 – 330000
		50 V	2200 – 100000
	21 (0805)	6.3V	10000000
		10 V	4700000
		16 V	10000 – 2200000
		25 V	10000 – 1000000
		50 V	2200 – 1000000
	31 (1206)	10 V	4700000 – 22000000
		16 V	1000000 – 10000000
		25 V	470000 – 3300000
		50 V	10000 – 1000000
	32 (1210)	6.3V	47000000
		10 V	22000000
		16 V	3300000 – 15000000
		25 V	1000000 – 10000000
		50 V	100000 – 1000000
	43 (1812)	16V	22000000
		25 V	10000000
		50 V	10000000
	55 (2220)	10 V	100000000

■ RELIABILITY TEST DATA

<table>
<tr><th>NO</th><th colspan="2">ITEM</th><th>PERFORMANCE</th><th colspan="3">TEST CONDITION</th></tr>
<tr><td>1</td><td colspan="2">APPEARANCE</td><td>NO ABNORMAL EXTERIOR APPEARANCE</td><td colspan="3">THROUGH MICROSCOPE(×10)</td></tr>
<tr><td>2</td><td colspan="2">INSULATION RESISTANCE</td><td>10,000MΩ OR 500MΩ·μF PRODUCT WHICHEVER IS SMALLER
(RATED VOLTAGE IS BELOW 16V
: 10,000MΩ OR 100MΩ·μF)</td><td colspan="3">RATED VOLTAGE SHALL BE APPLIED.
MEASUREMENT TIME IS 60 ~ 120 RATED VOLTAGE TIME 60 SEC.</td></tr>
<tr><td>3</td><td colspan="2">WITHSTANDING VOLTAGE</td><td>NO DIELECTRIC BREAKDOWN OR MECHANICAL BREAKDOWN</td><td colspan="3">CLASS Ⅰ: 300% OF THE RATED VOLTAGE FOR 1~5 SEC, CLASS Ⅱ:250% OF THE RATED VOLTAGE FOR 1~5 SEC IS APPLIED WITH LESS THAN 50mA CURRENT</td></tr>
<tr><td rowspan="4">4</td><td rowspan="4">CAPACITANCE</td><td rowspan="2">CLASS Ⅰ</td><td rowspan="2">WITHIN THE SPECIFIED TOLERANCE</td><td>CAPACITANCE</td><td>FREQUENCY</td><td>VOLTAGE</td></tr>
<tr><td>1,000pF AND BELOW</td><td>1MHz±10%</td><td rowspan="2">0.5 ~ 5 Vrms</td></tr>
<tr><td rowspan="2">CLASS Ⅱ</td><td rowspan="2">WITHIN THE SPECIFIED TOLERANCE</td><td>MORE THAN 1,000pF</td><td>1kHz±10%</td></tr>
<tr><td>CAPACITANCE</td><td>FREQUENCY</td><td>VOLTAGE</td></tr>
<tr><td>5</td><td>Q</td><td>CLASS Ⅰ</td><td>OVER 30pF : Q ≥1,000
LESS THAN 30pF: Q ≥400 +20C
(C : CAPACITANCE)</td><td colspan="3">
<table>
<tr><td>CAPACITANCE</td><td>FREQUENCY</td><td>VOLTAGE</td></tr>
<tr><td>1,000pF AND BELOW</td><td>1MHz±10%</td><td rowspan="2">0.5 ~ 5 Vrms</td></tr>
<tr><td>MORE THAN 1,000pF</td><td>1kHz±10%</td></tr>
</table>
</td></tr>
<tr><td>6</td><td>Tanδ</td><td>CLASS Ⅱ</td><td>1. CHAR : B
<table>
<tr><td>RATED VOLTAGE</td><td>DF SPEC</td></tr>
<tr><td>6.3V</td><td>0.05 max</td></tr>
<tr><td>10V</td><td>0.05 max</td></tr>
<tr><td>16V</td><td>0.035 max</td></tr>
<tr><td>25V</td><td>0.025 max</td></tr>
<tr><td>50V 이상</td><td>0.025 max</td></tr>
</table>
2. CHAR : F
<table>
<tr><td></td><td>6.3V</td><td>10V</td><td>16V</td><td>25V</td><td>50V</td></tr>
<tr><td>1005</td><td>-</td><td>0.125max</td><td>0.09max (C＜220nF)
0.125max (C≥220nF)</td><td>0.05max</td><td>0.05max</td></tr>
<tr><td>1608</td><td>0.16max</td><td>0.125max</td><td>0.09max</td><td>0.05max(C≤100nF)
0.07max(C>100nF)</td><td>0.05max</td></tr>
<tr><td>2012</td><td>0.16max</td><td>0.125max</td><td>0.09max</td><td>0.07max</td><td>0.05max</td></tr>
<tr><td>3216</td><td>0.16max</td><td>0.125max</td><td>0.09max</td><td>0.07max</td><td>0.05max</td></tr>
<tr><td>3225</td><td>0.16max</td><td>0.125max</td><td>0.09max</td><td>0.07max(C≤6.8μF)
0.09max(C>6.8μF)</td><td>0.05max</td></tr>
<tr><td>4532</td><td>0.16max</td><td>0.16max</td><td>0.09max</td><td>-</td><td>-</td></tr>
<tr><td>5750</td><td></td><td>0.125max</td><td>-</td><td>-</td><td>-</td></tr>
</table>
</td><td colspan="3">
<table>
<tr><td>CAPACITANCE</td><td>FREQUENCY</td><td>VOLTAGE</td></tr>
<tr><td>10μF AND BELOW</td><td>1kHz±10%</td><td>1.0±0.2Vrms</td></tr>
<tr><td>MORE THAN 10μF</td><td>120Hz±20%</td><td>0.5±0.1Vrms</td></tr>
</table>
</td></tr>
</table>

<table>
<tr><th>NO</th><th colspan="2">ITEM</th><th>PERFORMANCE</th><th>TEST CONDITION</th></tr>
<tr><td>7</td><td>CAPACITANCE TEMPERATURE COEFFICIENT</td><td>CLASS
Ⅰ</td><td>
<table>
<tr><th>CHARACTERISTIC</th><th>TEMP. COEFFICIENT (PPM/℃)</th></tr>
<tr><td>C0G</td><td>0 ± 30</td></tr>
<tr><td>PH</td><td>-150 ± 60</td></tr>
<tr><td>RH</td><td>-220 ± 60</td></tr>
<tr><td>SH</td><td>-330 ± 60</td></tr>
<tr><td>TH</td><td>-470 ± 60</td></tr>
<tr><td>UL</td><td>-750 ± 120</td></tr>
<tr><td>SL</td><td>+350 ~ -1000</td></tr>
</table>
</td><td>THESE SYMMETRICAL TOLERANCE APPLY TO 2 POINT MEASUREMENT OF TEMPERATURE COEFFICIENT: ONE AT 25℃ AND AT 85℃
<table>
<tr><th>STEP</th><th>TEMPERATURE</th></tr>
<tr><td>1</td><td>25 ± 2</td></tr>
<tr><td>2</td><td>MIN RATED TEMP ± 2</td></tr>
<tr><td>3</td><td>25 ± 2</td></tr>
<tr><td>4</td><td>MAX RATED TEMP ± 2</td></tr>
<tr><td>5</td><td>25 ± 2</td></tr>
</table>
</td></tr>
<tr><td>8</td><td>TEMPERATURE CHARACTERISTICS</td><td>CLASS
Ⅱ</td><td>CAPACITANCE CHANGE
<table>
<tr><th>CHAR.</th><th>CAP. CHANGE(%)</th></tr>
<tr><td>A,B</td><td>±15%</td></tr>
<tr><td>F</td><td>+22% ~ -82%</td></tr>
</table>
</td><td>The change of capacitance should be got from the capacitance at 25℃.
After capacitance measured from Min. Temp. to Max. Temp.,
it should be calculated from the formula below.
$\frac{C2 - C1}{C1} \times 100\ \%$
C1 : CAPACITANCE AT STANDARD TEMPERATURE(25℃)
C2 : CAPACITANCE AT EACH TEMPERATURE</td></tr>
<tr><td>9</td><td colspan="2">ADHESIVE STRENGTH OF TERMINATION</td><td>NO INDICATION OF PEELING SHALL OCCUR ON THE TERMINAL ELECTRODE.</td><td>A 500g.f PRESSURE SHALL BE APPLIED FOR 10±1 SECOND.
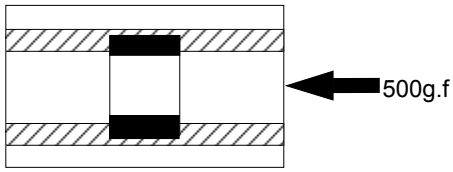

SEE (FIG.1)</td></tr>
<tr><td rowspan="5">10</td><td rowspan="5">BENDING STRENGTH</td><td>APPEARANCE</td><td colspan="3">NO MECHANICAL DAMAGE SHALL OCCUR.</td><td rowspan="5">BENDING SHALL BE APPLIED TO THE LIMIT(1mm) WITH 0.3mm/SEC.
KEEP THE TEST BOARD AT THE LIMIT POINT IN 5 SEC., THEN MEASURE CAPACITANCE.
<table>
<tr><th>CHARACTER</th><th>LIMIT</th></tr>
<tr><td>C, A, B, F</td><td>1mm</td></tr>
</table>
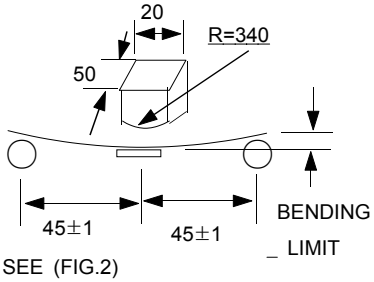

SEE (FIG.2)</td></tr>
<tr><td rowspan="4">CAPACITANCE</td><td colspan="2">CHARACTER</td><td>CHANGE OF CAPACITANCE</td></tr>
<tr><td colspan="2">CLASS Ⅰ</td><td>WITHIN ±5% OR ± 0.5 pF WHICHEVER IS LARGER</td></tr>
<tr><td rowspan="2">CLASS Ⅱ</td><td>A,B</td><td>WITHIN ±12.5%</td></tr>
<tr><td>F</td><td>WITHIN ±30%</td></tr>
</table>

<table>
<tr><th>NO</th><th colspan="2">ITEM</th><th colspan="3">PERFORMANCE</th><th>TEST CONDITION</th></tr>
<tr><td>11</td><td colspan="2">SOLDERABILITY</td><td colspan="3">MORE THAN 75% OF THE TERMINAL SURFACE IS TO BE SOLDERED NEWLY, SO METAL PART DOES NOT COME OUT OR DISSOLVE
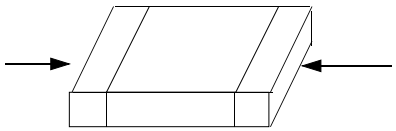
IN PB--FREE PART, MORE THAN 95% OF THE TERMINAL SURFACE IS TO BE SOLDERED NEWLY</td><td>SOLDER TEMPERATURE : 230±5℃
DIP TIME : 3±1 Sec
SOLDER : H63A
FLUX : RMA TYPE
*PB-FREE
SOLDER TEMPERATURE : 260±5℃
SOLDER : Sn96.5-3Ag-0.5Cu
Flux : RMA TYPE
DIP TIME : 3±0.1Sec
* PRE-HEATING : AT 80~120℃ FOR 10~30SEC.</td></tr>
<tr><td rowspan="7">12</td><td rowspan="7">RESISTANCE TO SOLDERING HEAT</td><td>APPEARANCE</td><td colspan="3">NO MECHANICAL DAMAGE SHALL OCCUR</td><td rowspan="7">DIP : SOLDER TEMPERATURE OF 270±5℃
DIP TIME :10±1 SEC.
EACH TERMINATION SHALL BE FULLY IMMERSED AND PREHEATED AS FOLLOWING:
<table><tr><th>STEP</th><th>TEMP.(℃)</th><th>TIME (SEC.)</th></tr><tr><td>1</td><td>80~100</td><td>60</td></tr><tr><td>2</td><td>150~180</td><td>60</td></tr></table>
MEASURE AT ROOM TEMP. AFTER COOLING FOR
CLASS Ⅰ : 24 ± 2 HOURS
CLASS Ⅱ : 48 ± 4 HOURS</td></tr>
<tr><td rowspan="3">CAPACITANCE</td><td>CHARACTERISTIC</td><td colspan="2">CAP. CHANGE</td></tr>
<tr><td>CLASS Ⅰ</td><td colspan="2">WITHIN ±2.5% OR ±0.25pF WHICHEVER IS LARGER</td></tr>
<tr><td rowspan="2">CLASS Ⅱ</td><td>A,B</td><td>WITHIN ±7.5%</td></tr>
<tr><td>F</td><td>WITHIN ±20%</td></tr>
<tr><td>Q
CLASS Ⅰ</td><td colspan="3">30pF AND OVER : Q≥ 1000
LESS THAN 30pF : Q≥ 400+20×C</td></tr>
<tr><td>Tanδ
CLASS Ⅱ</td><td colspan="3">TO SATISFY THE SPECIFIED INITIAL VALUE</td></tr>
<tr><td>INSULATION RESISTANCE</td><td colspan="3">TO SATISFY THE SPECIFIED INITIAL VALUE</td></tr>
<tr><td>WITHSTANDING VOLTAGE</td><td colspan="3">TO SATISFY THE SPECIFIED INITIAL VALUE</td></tr>
<tr><td rowspan="7">13</td><td rowspan="7">VIBRATION TEST</td><td>APPEARANCE</td><td colspan="3">NO MECHANICAL DAMAGE SHALL OCCUR.</td><td rowspan="7">BENDING SHALL BE APPLIED TO THE LIMIT(1mm) WITH 0.3mm/SEC. KEEP THE TEST BOARD AT THE LIMIT POINT IN 5 SEC., THEN MEASURE CAPACITANCE.
<table><tr><th>CHAR.</th><th>FREQUENCY RANGE</th></tr><tr><td>A,B,C,F</td><td>10Hz → 55Hz → 10Hz</td></tr></table>
<table><tr><th>CHAR.</th><th>TRAVERSED TIME</th></tr><tr><td>A,B,C,F</td><td>1 min</td></tr></table>
THE ENTIRE FREQUENCY RANGE, FROM 10 TO 55Hz AND RETURN TO 10Hz, SHALL BE TRAVERSED IN 1 MINUTE.

THIS CYCLE SHALL BE PERFORMED 2 HOURS IN EACH THERE MUTUALLY PERPENDICULAR DIRECTION, FOR TOTAL PERIOD OF 6 HOURS.</td></tr>
<tr><td rowspan="3">CAPACITANCE</td><td>CHARACTERISTIC</td><td colspan="2">CAP. CHANGE</td></tr>
<tr><td>CLASS Ⅰ</td><td colspan="2">WITHIN ±2.5% OR ±0.25pF WHICHEVER IS LARGER</td></tr>
<tr><td rowspan="2">CLASS Ⅱ</td><td>A,B</td><td>WITHIN ±5%</td></tr>
<tr><td>F</td><td>WITHIN ±20%</td></tr>
<tr><td>Q
CLASS Ⅰ</td><td colspan="3">30pF AND OVER : Q≥ 1000
LESS THAN 30pF : Q≥ 400+20×C</td></tr>
<tr><td>Tanδ
CLASS Ⅱ</td><td colspan="3">TO SATISFY THE SPECIFIED INITIAL VALUE</td></tr>
<tr><td>INSULATION RESISTANCE</td><td colspan="3">TO SATISFY THE SPECIFIED INITIAL VALUE</td></tr>
</table>

* THE INITIAL VALUE OF HIGH DIELECTRIC CONSTANT SERIES SHALL BE MEASURED AFTER THE HEAT TREATMENT OF 150 +0/-10℃, 1Hr AND SITTING OF 48±4hr AT ROOM TEMPERATURE & ROOM HUMIDITY.

Multilayer Ceramic Capacitor - General

<table>
<tr><th>NO</th><th colspan="2">ITEM</th><th colspan="3">PERFORMANCE</th><th>TEST CONDITION</th></tr>
<tr><td rowspan="4">14</td><td rowspan="4">HUMIDITY
(STEADY
STATE)</td><td>APPEARANCE</td><td colspan="3">NO MECHANICAL DAMAGE SHALL OCCUR</td><td rowspan="4">TEMPERATURE : 40±2 ℃
RELATIVE HUMIDITY:90~95 %RH
TEST TIME : 500 +12/-0 Hr.

MEASURE AT ROOM TEMPERATURE
AFTER COOLING FOR
CLASS Ⅰ : 24±2 Hr.
CLASS Ⅱ : 48±4 Hr.

<table><tr><td>6.3V
Tanδ</td><td>0.125 MAX *Condition</td></tr><tr><td>CLASS Ⅱ
(A,B)</td><td>1005 C ≥0.22㎌
1608 C ≥2.2㎌
2012 C ≥4.7㎌
3216 C ≥10.0㎌
3225 C ≥22.0㎌
4532 C ≥47.0㎌
5750 C ≥100.0㎌</td></tr></table></td></tr>
<tr><td>CAPACITANCE</td><td>CHARACTERISTIC</td><td colspan="2">CAPACITANCE CHANGE</td></tr>
<tr><td></td><td>CLASS Ⅰ</td><td colspan="2">WITHIN ±5% OR
±0.5pF WHICHEVER
IS LARGER</td></tr>
<tr><td></td><td rowspan="2">CLASS Ⅱ</td><td>A,B</td><td>WITHIN ±12.5%</td></tr>
<tr><td></td><td>F</td><td>WITHIN ±30%</td></tr>
<tr><td></td><td>Q
CLASS Ⅰ</td><td colspan="3">30pF AND OVER : Q≥ 350
10 ~30pF : Q≥ 275 + 2.5×C
LESS THAN 10pF : Q≥ 200 + 10×C</td></tr>
<tr><td></td><td>Tanδ
CLASS Ⅱ</td><td colspan="3"><table><tr><td>CHAR.</td><td>25V AND OVER</td><td>16V</td><td>10V</td><td>6.3V</td><td>4V</td></tr><tr><td>A,B</td><td>0.05</td><td>0.05 MAX</td><td>0.05 MAX</td><td>0.075 MAX</td><td>0.1 MAX</td></tr><tr><td>F</td><td>0.075 MAX</td><td>0.1MAX (C〈1.0㎌) 0.125 MAX (C≥1.0㎌)</td><td>0.15 MAX</td><td>0.195 MAX</td><td>0.25 MAX</td></tr></table></td></tr>
<tr><td></td><td>INSULATION
RESISTANCE</td><td colspan="3">MINIMUM INSULATION RESISTANCE:
1,000 MΩ OR 50MΩ·㎌ PRODUCT WHICHEVER IS SMALLER</td></tr>
<tr><td rowspan="6">15</td><td rowspan="6">MOISTURE
RESISTANCE</td><td>APPEARANCE</td><td colspan="3">NO MECHANICAL DAMAGE SHALL OCCUR</td><td rowspan="6">APPLIED VOLTAGE :
RATED VOLTAGE
TEMPERATURE : 40±2 ℃
RELATIVE HUMIDITY:90~95%RH
TEST TIME : 500 +12/-0 Hr.
CURRENT APPLIED : 50㎃ MAX.
<INITIAL MEASUREMENT>
CLASS Ⅱ SHOULD BE MEASURED
INITIAL VALUE AFTER BE HEAT-TREATED
FOR 1 HR IN 150℃+0/-10℃ AND BE LEFT
FOR 48±4HR AT ROOM TEMPERATURE.
<LATTER MEASUREMENT>
CLASS Ⅰ SHOULD BE MEASURED AFTER
LEFT FOR 24±2 HRS IN ROOM
TEMPERATURE AND HUMIDITY.
CLASS Ⅱ SHOULD BE MEASURED
LATTER VALUE AFTER BE
HEAT-TREATED FOR 1 HR IN 150℃+0/-10
℃ AND BE LEFT FOR 48±4HR AT ROOM
TEMPERATURE.

<table><tr><td>6.3V Tanδ</td><td>0.125 MAX *Condition</td></tr><tr><td>CLASS Ⅱ
(A,B)</td><td>1005 C ≥0.22㎌
1608 C ≥2.2㎌
2012 C ≥4.7㎌
3216 C ≥10.0㎌
3225 C ≥22.0㎌
4532 C ≥47.0㎌
5750 C ≥100.0㎌</td></tr></table></td></tr>
<tr><td></td><td>CAPACITANCE</td><td>CHARACTERISTIC</td><td colspan="2">CAPACITANCE CHANGE</td></tr>
<tr><td></td><td></td><td>CLASS Ⅰ</td><td colspan="2">WITHIN ±7.5% OR
±0.75pF WHICHEVER
IS LARGER</td></tr>
<tr><td></td><td></td><td rowspan="2">CLASS Ⅱ</td><td>A,B</td><td>WITHIN ±12.5%</td></tr>
<tr><td></td><td></td><td>F</td><td>WITHIN ±30%
WITHIN +30~－40%
1005 C>0.47μF
1608 C>1.0μF
2012 C>4.7μF
3216 C>10.0μF
3225 C>22.0μF
4532 C>47.0μF</td></tr>
<tr><td></td><td></td><td>Q
CLASS Ⅰ</td><td colspan="3">30pF AND OVER : Q≥ 200
30pF AND BELOW : Q≥ 100 + 10/3×C</td></tr>
<tr><td></td><td></td><td>Tanδ
CLASS Ⅱ</td><td colspan="3"><table><tr><td>CHAR.</td><td>25V AND OVER</td><td>16V</td><td>10V</td><td>6.3V</td><td>4V</td></tr><tr><td>A,B</td><td>0.05 MAX</td><td>0.05 MAX</td><td>0.05 MAX</td><td>0.075 MAX</td><td>0.1 MAX</td></tr><tr><td>F</td><td>0.075 MAX</td><td>0.1MAX (C〈1.0㎌) 0.125MAX (C≥1.0㎌)</td><td>0.15 MAX</td><td>0.195 MAX</td><td>0.25 MAX</td></tr></table></td></tr>
<tr><td></td><td></td><td>INSULATION
RESISTANCE</td><td colspan="3">MINIMUM INSULATION RESISTANCE:
500 MΩ OR 25MΩ·㎌ PRODUCT,
WHICHEVER IS SMALLER.</td></tr>
</table>

<table>
<tr><th>NO</th><th colspan="2">ITEM</th><th colspan="3">PERFORMANCE</th><th>TEST CONDITION</th></tr>
<tr><td rowspan="4">16</td><td rowspan="4">HIGH TEMPERATURE RESISTANCE</td><td>APPEARANCE</td><td colspan="3">NO MECHANICAL DAMAGE SHALL OCCUR</td><td rowspan="4">APPLIED VOLTAGE :
150%, 200% OF RATED VOLTAGE
TEST TIME : 1000 +48/-0 Hr.
CURRENT APPLIED : 50㎃ MAX.

<table><tr><th colspan="2">CHAR.</th><th>TEMP.</th></tr><tr><td colspan="2">CLASS Ⅰ</td><td>125 ±3 ℃</td></tr><tr><td rowspan="3">CLASS Ⅱ</td><td>A</td><td>85 ±3 ℃</td></tr><tr><td>B</td><td>125 ±3 ℃</td></tr><tr><td>F</td><td>85 ±3 ℃</td></tr></table>
<INITIAL MEASUREMENT>
CLASS Ⅱ SHOULD BE MEASURED INITIAL VALUE AFTER BE HEAT-TREATED FOR 1 HR IN 150℃+0/-10℃ AND BE LEFT FOR 48±4HR AT ROOM TEMPERATURE.
<LATTER MEASUREMENT>
CLASS Ⅰ SHOULD BE MEASURED AFTER LEFT FOR 24±2 HRS IN ROOM TEMPERATURE AND HUMIDITY.
CLASS Ⅱ SHOULD BE MEASURED LATTER VALUE AFTER BE HEAT-TREATED FOR 1 HR IN 150℃+0/-10℃ AND BE LEFT FOR 48±4HR AT ROOM TEMPERATURE.

<table><tr><th></th><th>*150% Authorization Conditions</th></tr><tr><td>CLASS Ⅱ (A,B,F)</td><td>1005 C>0.47㎌
1608 C ≥2.2㎌
2012 C ≥4.7㎌
3216 C ≥10.0㎌
3225 C ≥22.0㎌
4532 C ≥47.0㎌
5750 C ≥100.0㎌</td></tr></table>
(TWICE OF RATED VOLTAGE WILL BE APPLIED TO ALL SERIES BUT ABOVE)

** HOWEVER, A/B≒1005 C ≥0.22㎌
SEE (FIG.3)</td></tr>
<tr><td>CAPACITANCE</td><td colspan="3"><table><tr><td>CHARACTERISTIC</td><td colspan="2">CAP. CHANGE</td></tr><tr><td colspan="2">CLASS Ⅰ</td><td>WITHIN ±3% OR ±0.3㎊, WHICHEVER IS LARGER</td></tr><tr><td rowspan="3">CLASS Ⅱ</td><td>A,B</td><td>WITHIN ±12.5%</td></tr><tr><td rowspan="2">F</td><td>WITHIN ±30%</td></tr><tr><td>WITHIN+30~40%
1005 C>0.47㎌
1608 C>1.0㎌
2012 C>4.7㎌
3216 C>10.0㎌
3225 C>22.0㎌
4532 C>47.0㎌</td></tr></table></td></tr>
<tr><td>Q
CLASS Ⅰ</td><td colspan="3">30㎊ AND OVER : Q ≥ 350
10 ~ 30 ㎊ : Q ≥ 275 + 2.5×C
LESS THAN 10㎊ :Q ≥200 + 10×C</td></tr>
<tr><td>Tanδ
CLASS Ⅱ</td><td colspan="3"><table><tr><th>CHAR.</th><th>25V AND OVER</th><th>16V</th><th>10V</th><th>6.3V</th><th>4V</th></tr><tr><td>A,B</td><td>0.05 MAX</td><td>0.05 MAX</td><td>0.05 MAX</td><td>0.075 MAX</td><td>0.1 MAX</td></tr><tr><td>F</td><td>0.075 MAX</td><td>0.1MAX (C<1.0㎌)
0.125MAX (C≥1.0㎌)</td><td>0.15 MAX</td><td>0.195 MAX</td><td>0.25 MAX</td></tr></table></td></tr>
<tr><td>INSULATION RESISTANCE</td><td colspan="3">MINIMUM INSULATION RESISTANCE:
1,000 ㏁ OR 50㏁·㎌ PRODUCT
WHICHEVER IS SMALLER</td></tr>
<tr><td rowspan="5">17</td><td rowspan="5">TEMPERATURE CYCLE</td><td>APPEARANCE</td><td colspan="3">NO MECHANICAL DAMAGE SHALL OCCUR</td><td rowspan="5">CAPACITORS SHALL BE SUBJECTED TO FIVE CYCLES OF THE TEMPERATURE CYCLE AS FOLLOWING

<table><tr><th>STEP</th><th>TEMP.(℃)</th><th>TIME(MIN)</th></tr><tr><td>1</td><td>MIN.RATED TEMP.+0/-3</td><td>30</td></tr><tr><td>2</td><td>25</td><td>2~3</td></tr><tr><td>3</td><td>MAX.RATED TEMP.+3/-0</td><td>30</td></tr><tr><td>4</td><td>25</td><td>2~3</td></tr></table>
MEASURE AT ROOM TEMPERATURE AFTER COOLING FOR
CLASS Ⅰ : 24±2 Hr.
CLASS Ⅱ : 48±4 Hr.</td></tr>
<tr><td>CAPACITANCE</td><td colspan="3"><table><tr><td>CHARACTERISTIC</td><td colspan="2">CAP. CHANGE</td></tr><tr><td colspan="2">CLASS Ⅰ</td><td>WITHIN ±2.5% OR ±0.25㎊ WHICHEVER IS LARGER</td></tr><tr><td rowspan="2">CLASS Ⅱ</td><td>A,B</td><td>WITHIN ±7.5%</td></tr><tr><td>F</td><td>WITHIN ±20%</td></tr></table></td></tr>
<tr><td>Q
CLASS Ⅰ</td><td colspan="3">30 ㎊ AND OVER : Q ≥ 1000
LESS THAN 30㎊:Q ≥400 +20×C</td></tr>
<tr><td>Tanδ
CLASS Ⅱ</td><td colspan="3">TO SATISFY THE SPECIFIED
INITIAL VALUE</td></tr>
<tr><td>INSULATION RESISTANCE</td><td colspan="3">TO SATISFY THE SPECIFIED
INITIAL VALUE</td></tr>
</table>

■ CHARACTERISTIC GRAPH

● ELECTRICAL CHARACTERISTICS

▶ CAPACITANCE - TEMPERATURE CHARACTERISTICS

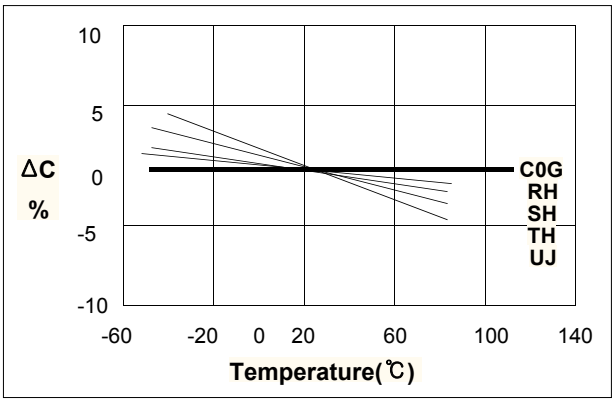

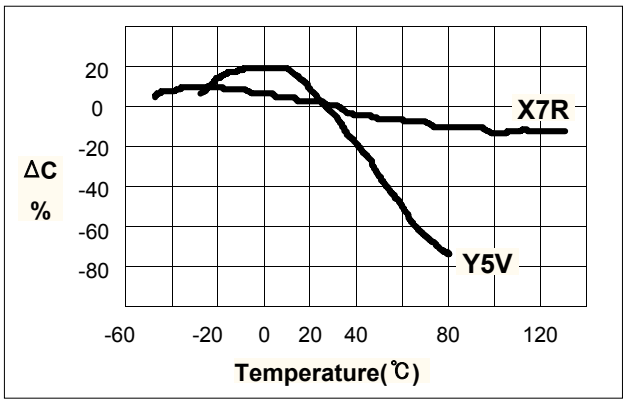

▶ CAPACITANCE - DC VOLTAGE CHARACTERISTICS

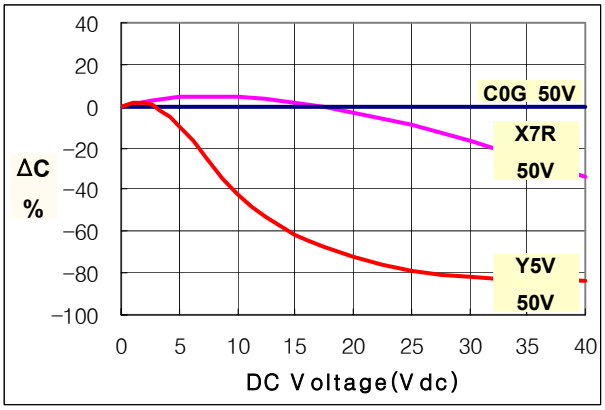

▶ CAPACITANCE CHANGE - AGING

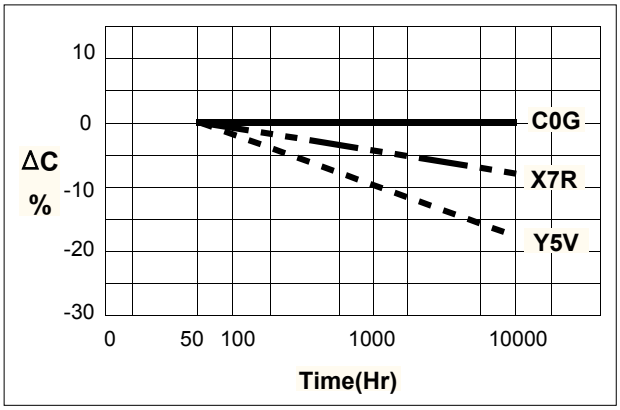

▶ IMPEDANCE - FREQUENCY CHARACTERISTICS

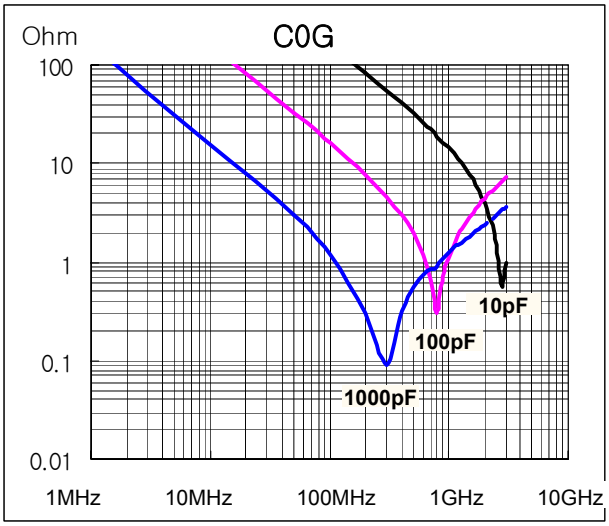

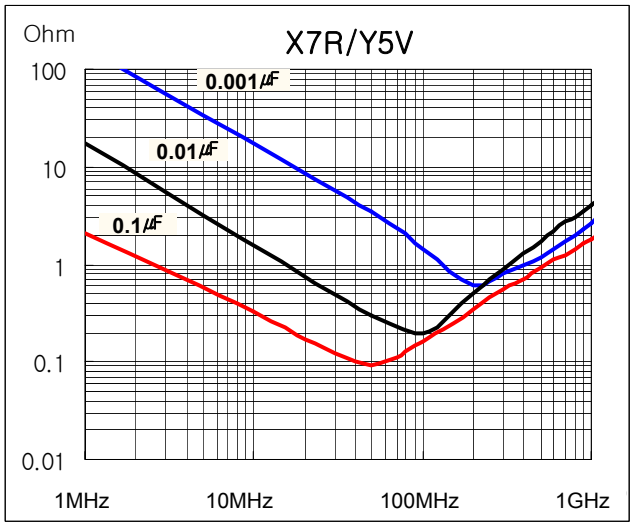

■ APPLICATION MANUAL

● Storage Condition

▶ Storage Environment

The electrical characteristics of MLCCs were degraded by the environment of high temperature or humidity. Therefore, the MLCCs shall be stored in the ambient temperature and the relative humidity of less than 40℃ and 70%, respectively. Guaranteed storage period is within 6 months from the outgoing date of delivery.

▶ Corrosive Gases

Since the solderability of the end termination in MLCC was degraded by a chemical atmosphere such as chlorine, acid or sulfide gases, MLCCs must be avoid from these gases.

▶ Temperature Fluctuations

Since dew condensation may occur by the differences in temperature when the MLCCs are taken out of storage, it is important to maintain the temperature-controlled environment.

● Design of Land Pattern

When designing printed circuit boards, the shape and size of the lands must allow for the proper amount of solder on the capacitor. The amount of solder at the end terminations has a direct effect on the crack. The crack in MLCC will be easily occurred by the tensile stress which was due to too much amount of solder. In contrast, if too little solder is applied, the termination strength will be insufficiently. Use the following illustrations as guidelines for proper land design.

Recommendation of Land Shape and Size

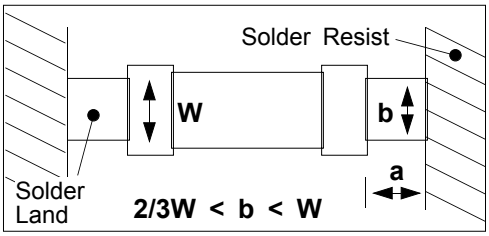

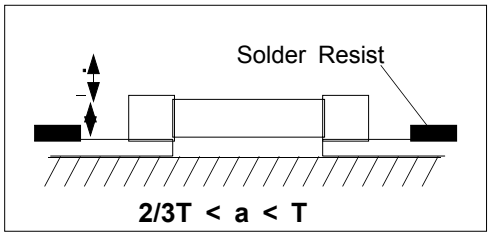

● Adhesives

When flow soldering the MLCCs, apply the adhesive in accordance with the following conditions.

▶ Requirements for Adhesives

They must have enough adhesion, so that, the chips will not fall off or move during the handling of the circuit board.

They must maintain their adhesive strength when exposed to soldering temperature.

They should not spread or run when applied to the circuit board.

They should harden quickly.

They should not corrode the circuit board or chip material.

They should be a good insulator.
They should be non-toxic, and not produce harmful gases, nor be harmful when touched.

▶ **Application Method**

It is important to use the proper amount of adhesive. Too little and much adhesive will cause poor adhesion and overflow into the land, respectively.

▶ **Adhesive hardening Characteristics**

To prevent oxidation of the terminations, the adhesive must harden at 160℃ or less, within 2 minutes or less.

● Mounting

▶ **Mounting Head Pressure**

Excessive pressure will cause crack to MLCCs. The pressure of nozzle will be 300g maximum during mounting.

▶ **Bending Stress**

When double-sided circuit boards are used, MLCCs first are mounted and soldered onto one side of the board. When the MLCCs are mounted onto the other side, it is important to support the board as shown in the illustration. If the circuit board is not supported, the crack occur to the ready-installed MLCCs by the bending stress.

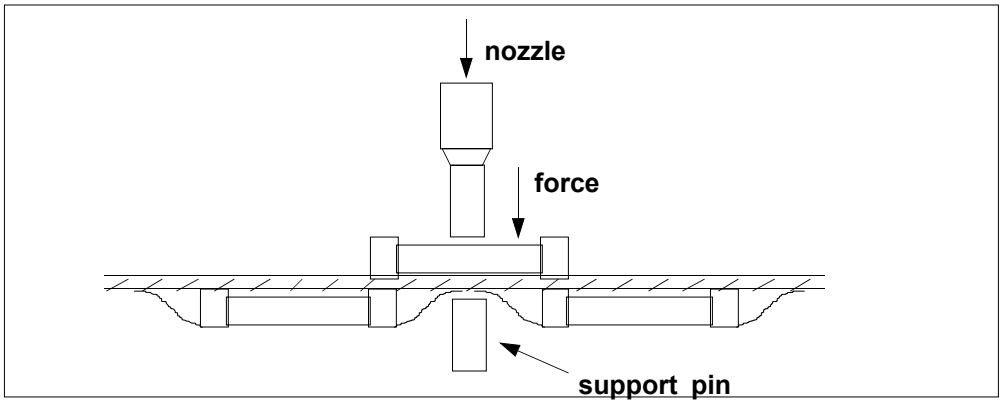

● Flux

Although the solderability increased by the highly-activated flux, increase of activity in flux may also degrade the insulation of the chip capacitors. To avoid such degradation, it is recommended that a mildly activated rosin flux(less than 0.2% chlorine) be used.

● Soldering

Since a multilayer ceramic chip capacitor comes into direct contact with melted solder during soldering, it is exposed to potentially mechanical stress caused by the sudden temperature change. The capacitor may also be subject to silver migration, and to contamination by the flux. Because of these factors, soldering technique is critical.

▶ Soldering Methods

Method	Classification	
Reflow soldering	- Overall heating	- Infrared rays - Hot plate - VPS(vapor phase)
	- Local heating	- Air heater - Laser - Light beam
Flow soldering	- Single wave - Double wave	-

* We recommend the reflow soldering method.

▶ Soldering Profile

To avoid crack problem by sudden temperature change, follow the temperature profile in the adjacent graph.

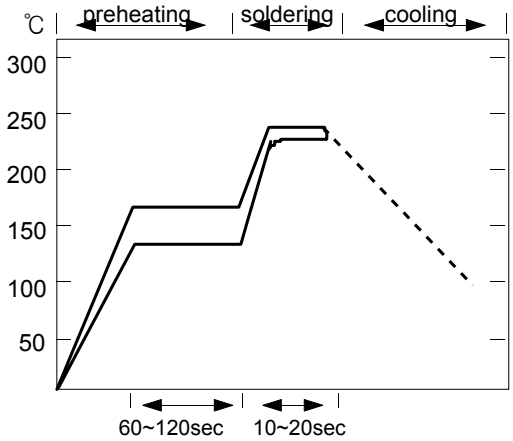

Reflow Soldering

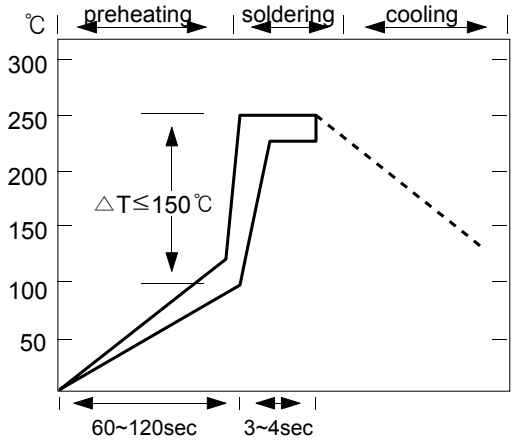

Flow Soldering

▶ Manual Soldering

Manual soldering can pose a great risk of creating thermal cracks in chip capacitors. The hot soldering iron tip comes into direct contact with the end terminations, and operator's carelessness may cause the tip of the soldering iron to come into direct contact with the ceramic body of the capacitor. Therefore the soldering iron must be handled carefully, and close attention must be paid to the selection of the soldering iron tip and to temperature control of the tip.

▶ **Amount of Solder**

Too much Solder	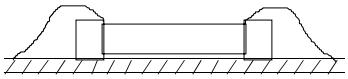	Cracks tend to occur due to large stress
Not enough Solder	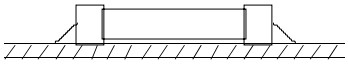	Weak holding force may cause bad connections or detaching of the capacitor
Good	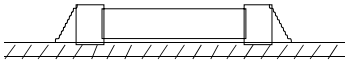	

▶ **Cooling**

Natural cooling using air is recommended. If the chips are dipped into solvent for cleaning, the temperature difference(△T) must be less than 100℃

6-6. Cleaning

If rosin flux is used, cleaning usually is unnecessary. When strongly activated flux is used, chlorine in the flux may dissolve into some types of cleaning fluids, thereby affecting the chip capacitors. This means that the cleaning fluid must be carefully selected, and should always be new.

▶ **Notes for Separating Multiple, Shared PC Boards.**

A multi-PC board is separated into many individual circuit boards after soldering has been completed. If the board is bent or distorted at the time of separation, cracks may occur in the chip capacitors. Carefully choose a separation method that minimizes the bending of the circuit board.

■ CROSS REFERENCE

P/N \ COMPANY		SAMSUNG	AVX	JOHANSON	KEMET	KYOCERA	MURATA	NOVACAP	PANASONIC	ROHM	TAIYO - YUDEN	TDK	VITRAMON
① COMPANY MODEL(MLCC)		CL	-	-	C	CM	GRM	-	ECJ	MCH	MK	C	VJ
② SIZE (EIA/JIS)	0201(0603)	03	-	-	-	03	33	-	Z	-	063	0603	-
	0402(1005)	05	0402	R07	0402	05	36	0402	0	15	105	1005	0402
	0603(1608)	10	0603	R14	0603	105	39	0603	1	18	107	1608	0603
	0805(2012)	21	0805	R15	0805	21	40	0805	2	21	212	2012	0805
	1206(3216)	31	1206	R18	1206	316	42-6	1206	3	31	316	3216	1206
	1210(3225)	32	1210	S41	1210	32	42-2	1210	4	32	325	3225	1210
	1808(4520)	42	1808	R29	1808	42	-	1808	-	-	-	4520	1808
	1812(4532)	43	1812	S43	1812	43	43-2	1812	-	43	432	4532	1812
	2220(5750)	55	-	-	2220	55	44-1	2221	-	-	550	5650	-
③ TEMPERATURE CHARACTERISTIC	COG(NPO)	C	A	N	G	CG	COG/CH	N	C	A	C	COG/CH	A
	P2H(N150)	P	S	-	-	P	P2H	-	P	-	P	PH	-
	R2H(N220)	R	1	-	-	R	R2H	-	R	-	R	RH	-
	S2H(N330)	S	3	-	-	S	S2H	-	S	-	S	SH	-
	T2H(N470)	T	O	-	-	T	T2H	-	T	-	T	TH	-
	U2J(N750)	U	Z	-	-	U	U2J	-	U	UJ	U	UJ	-
	S2L	L	Y	-	-	SL	SL	-	G	SL	SL	SL	-
	X7R	B	C	W	R(X)	X7R	X7R	B	B	C	BJ	X7R(B)	Y(X)
	Z5U	E	E	Z	U	-	Z5U	Z	-	E	-	Z5U	U
	Y5V	F	G	Y	V	Y5V	Y5V	Y	F	F	F	Y5V	-
④ NOMINAL CAPACITANCE		EX) 103=10,000pF 221=220pF 225=2,200,000pF=2.2μF 1R5=1.5pF 010=1pF											
⑤ CAPACITANCE TOLERANCE		B:±0.1pF C:±0.25pF D:±0.5pF F:±1% G:±2% J:±5% K:±10% M:±20% Z:-20~+80%											
⑥ RATED VOLTAGE	6.3V	Q	6	-	9	06	6.3	-	0J	-	J	0J	-
	10 V	P	Z	100	8	10	10	-	1A	4	L	1A	-
	16 V	O	Y	160	4	16	16	160	1C	3	E	1C	J
	25 V	A	3	250	3	25	25	250	1E	2	T	1E	X
	50 V	B	5	500	5	50	50	500	1H	5	U	1H	A
	100 V	C	1	101	1	100	100	101	2A	1	-	2A	B
	200V	D	2	201	2	200	200	201	2D	-	-	-	C
	250V	E	V	-	-	250	250	251	-	-	-	2E	-
	500V	G	7	501	-	500	500	501	-	-	-	-	E
	630V	H	-	-	-	630	630	-	-	-	-	2J	-
	1000V	I	A	102	-	1000	1K	102	-	-	-	3A	G
	2000V	J	G	202	-	2000	2K	202	-	-	-	3D	-
	3000V	K	H	302	-	3000	3K	302	-	-	-	3F	H
	4000V	-	J		-	4000	-	402	-	-	-	-	-
⑦ TERMINATION	NICKEL BARRIER	N	T	V	C	A	(GRM)	N	-	(MCH)	-	-	X
	Ag/Pd	P	1	-	-	B	(GR)	P	-	(MC)	-	-	F
⑧ PACKAGE	BULK(VINYL)	B	9	(NONE)	-	B	PB	*	X	-	B	B	B
	PAPER TAPING	C	2, 4	T, R	-	T, L	PT	T	E,V,W	K, L	T	T	C, P
	PLASTIC TAPING	E	1, 3	E, U	-	H, N	PT	-	F, Y	P, Q	T	-	T, R
	BULK CASE	P	7	-	-	C	PC	-	C	C	-	-	G

Multilayer Ceramic Capacitor - General

▶ SAMSUNG : CL10B104KA8NNNC

CL	10	B	104	K	A	8	N	N	N	C
Series	**Size** 03 = 0201 05 = 0402 10 = 0603 21 = 0805 31 = 1206 32 = 1210 43 = 1812 55 = 2220	**Dielectric** C = C0G P = P2H R = R2H S = S2H T = T2H U = U2H L = S2L B = X7R A = X5R F = Y5V	**Capacitance** 2 significant figures + number of zeros Use "R" for decimal point	**Tolerance** A = ±0.05pF B = ±0.1pF C = ±0.25pF D = ±0.5pF F = ±1% G = ±2% J = ±5% K = ±10% M = ±20% Z = +80,-20%	**Voltage** Q = 6.3V P = 10V O = 16V A = 25V B = 50V C = 100V D = 200V E = 250V G = 500V H = 630V I = 1000V	**Thickness** 3 = 0.30 5 = 0.50 8 = 0.80 A = 0.65 C = 0.85 H = 1.60 I = 2.00 J = 2.50 L = 3.20	**Electrode/ Termination/ Plating** A = Pd/Ag/ Sn 100% N = Ni/Cu/ Sn 100% G = Cu/Cu/ Sn 100%	**Products** A = Array (2-element) B = Array (4-element) C = High - Q L = LICC N = Normal P = Automotive W = 3 terminal chip	**Special** Various	**Packaging** B = Bulk P = Cassette C = Paper 7" D = Paper 13" (10,000EA) E = Embossing 7" F = Embossing 13" L = Paper 13" (15,000EA) O = Paper 10" S = Embossing 10"

▶ AVX : 06033C104KAT2A

0603	3	C	104	K	A	T	2	A
Size 0201 0402 0603 0805 1206 1210 1812 2220 2225	**Voltage** 4 = 4V 6 = 6.3V Z = 10V Y = 16V 3 = 25V B = 50V C = 100V D = 200V E = 250V G = 500V I = 1000V	**Dielectric** A = C0G C = X7R D = X5R E = Z5U G = Y5V	**Capacitance** 2 significant figures + number of zeros Use "R" for decimal point	**Tolerance** B = ±0.1pF C = ±0.25pF D = ±0.5pF F = ±1% G = ±2% J = ±5% K = ±10% M = ±20% Z = +80, -20% P = GMV,+100,-0%	**Failure Rate** A = N/A	**Termination** T = Sn 100% 7 = Gold Plated 1 = Pd/Ag	**Packaging** 2 = 7" Reel 4 = 13" Reel 7 = Cassette 9 = Bulk	**Special** A = Standard T = 0.66mm S = 0.56mm R = 0.46mm

▶ JOHANSON : 250R14W104KV6T

250	R14	W	104	K	V	6	T
Voltage 2 significant figures + number of zeros	**Size** R07 = 0402 R14 = 0603 R15 = 0805 R18 = 1206 S41 = 1210 S43 = 1812 S47 = 2220 S48 = 2225 S49 = 1825 S54 = 3640	**Dielectric** N = C0G W = X7R X = X5R Z = Z5U Y = Y5V	**Capacitance** 2 significant figures + number of zeros Use "R" for decimal point	**Tolerance** B = ±0.1pF C = ±0.25pF D = ±0.5pF F = ±1% G = ±2% J = ±5% K = ±10% M = ±20% Z = +80, -20% P = GMV,+100,-0%	**Termination** V = Ni Barrier	**Marking** 4 = No Mark 6 = Marking	**Packaging** E = 7" Reel Plastic T = 7" Reel Paper R = 13" Reel Paper U = 13" Reel Plastic None = Bulk

▶ KEMET : C0603C104K3RAC

C	0603	C	104	K	3	R	A	C
Series	**Size** 0402 0603 0805 1206 1210 1812 2220 2225	**Specification** C = Standard A = GR900 P = Mil-C-55681 CDR01-CDR06 N = Mil-C-55681 CDR31-CDR35 Z = Mil-C-123 E = Mil Equivalent (Group A Only)	**Capacitance** 2 significant figures + number of zeros Use "R" for decimal point	**Tolerance** B = ±0.1pF C = ±0.25pF D = ±0.5pF F = ±1% G = ±2% J = ±5% K = ±10% M = ±20% Z = +80, -20% P = +100, 0%	**Voltage** 9 = 6.3V 8 = 10V 4 = 16V 3 = 25V 5 = 50V 1 = 100V 2 = 200V	**Dielectric** G = C0G R = X7R P = X5R U = Z5U X = BX(Mil) V = Y5V	**Failure Rate** A = Standard M = 1.0 (Mil) P = 0.1 (Mil) R = 0.01 (Mil) S = 0.001 (Mil)	**Termination** C = Ni w/Tin Plate H = Ni w/Solder T = Silver G = Gold Plated

Multilayer Ceramic Capacitor - General

▶ KYOCERA : CM105X7R104K25AT

CM	105	X7R	104	K	25	A	T
Series	**Size** 03 = 0201 05 = 0402 105 = 0603 21 = 0805 316 = 1206 32 = 1210 42 = 1808 43 = 1812 55 = 2220	**Dielectric** CG X8R X7R X5R Z5U Y5V Y5U	**Capacitance** 2 significant figures + number of zeros Use "R" for decimal point	**Tolerance** B = ±0.1pF C = ±0.25pF D = ±0.5pF F = ±1% G = ±2% J = ±5% K = ±10% M = ±20% Z = +80, -20% P = +100, 0%	**Voltage** 04 = 4V 06 = 6.3V 10 = 10V 16 = 16V 25 = 25V 50 = 50V 100 = 100V 250 = 250V 500 = 500V 1000 = 1000V	**Termination** A = Ni Barrier	**Packaging** T = 7" Reel (4mm Pitch) L = 13" Reel (4mm Pitch) H = 7" Reel (2mm Pitch) N = 13" Reel (2mm Pitch) B = Bulk (Vinyl Bags) C = Bulk Cassette

▶ MURATA : GRM188R71E104KA01D

GRM	18	8	R7	1E	104	K	A01	D
Series Ni Barrier	**Size** 03 = 0201 15 = 0402 18 = 0603 21 = 0805 31 = 1206 32 = 1210 42 = 1808 43 = 1812 55 = 2220	**Thickness** 3 = 0.3mm 5 = 0.5mm 8 = 0.8mm A = 1.0mm B = 1.25mm C = 1.6mm D = 2.0mm E = 2.5mm F = 3.2mm	**Dielectric** 5C = C0G R7 = X7R R6 = X5R E4 = Z5U F5 = Y5V	**Voltage** 0J = 6.3V 1A = 10V 1C = 16V 1E = 25V 1H = 50V 2A = 100V 2E = 250V 2H = 500V 3A = 1000V	**Capacitance** 2 significant figures + number of zeros Use "R" for decimal point	**Tolerance** B = ±0.1pF C = ±0.25pF D = ±0.5pF F = ±1% G = ±2% J = ±5% K = ±10% M = ±20% Z = +80,-20% P = +100, 0%	**Individual Specification Code**	**Packaging** D = 7" Reel Paper L = 7" Reel Plastic J = 13" Reel Paper K = 13" Reel Plastic B = Bulk C = Bulk Cassette T = Bulk Tray

▶ NOVACAP : 0603B104K250N_TM

1206	B	104	K	250	N	-	T	M
Size 0402 0603 0805 1005 1206 1210 1808 1812 2220	**Dielectric** N = C0G B = X7R X = BX Z = Z5U Y = Y5V	**Capacitance** 2 significant figures + number of zeros Use "R" for decimal point	**Tolerance** B = ±0.1pF C = ±0.25pF D = ±0.5pF F = ±1% G = ±2% J = ±5% K = ±10% M = ±20% Z = +80,-20% P = +100, 0%	**Voltage** 2 significant figures + number of zeros	**Termination** P = Pd/Ag N = Ni Barrier (Sn 100%) Y = Ni Barrier (Sn/Pb)	**Thickness** Per Specified	**Packaging** T = Reel None = Bulk W = Waffle Pack	**Marking**

▶ PANASONIC : ECJ1EB1E104K

ECJ	1	E	B	1E	104	K
Series	**Size** Z = 0201 0 = 0402 1 = 0603 2 = 0805 3 = 1206 4 = 1210	**Packaging** X = Bulk E = Paper 2mm V = Paper 4mm F, Y = Plastic 4mm W = Large Reels 2mm Z = Large Reels 4mm C = Bulk Cassette	**Dielectric** C = C0G B = X7R, X5R F = Y5V	**Voltage** 0J = 6.3V 1A = 10V 1C = 16V 1E = 25V 1H = 50V 2A = 100V 2D = 200V	**Capacitance** 2 significant figures + number of zeros Use "R" for decimal point	**Tolerance** C = ±0.25pF D = ±0.5pF F = ±1% J = ±5% K = ±10% M = ±20% Z = +80, -20%

Multilayer Ceramic Capacitor - General

▶ ROHM : MCH182C104KKN

MCH	18	2	C	104	K	K	N
Series	**Size** 15 = 0402 18 = 0603 21 = 0805 31 = 1206 32 = 1210 43 = 1812	**Voltage** 4 = 10V 3 = 16V 2 = 25V 5 = 50V	**Dielectric** A = C0G C = X7R F = Y5V	**Capacitance** 2 significant figures + number of zeros Use "R" for decimal point	**Tolerance** B = ±0.1pF C = ±0.25pF D = ±0.5pF F = ±1% G = ±2% J = ±5% K = ±10% M = ±20% Z = +80,-20% P = +100, 0%	**Packaging** K = 7" Reel Paper P = 7" Reel Plastic L = 13" Reel Paper Q = 13" Reel Plastic B = Bulk C = Bulk Cassette	**Marking/Thickness** N = Marked Special Thickness

▶ TAIYO-YUDEN : TMK107BJ104K_T

T	M	K	107	BJ	104	K	-	T
Voltage A = 4V J = 6.3V L = 10V E = 16V T = 25V U = 50V	**Type** M = Multilayer V = Hi Q	**Termination** K = Ni Barrier	**Size** 105 = 0402 107 = 0603 212 = 0805 316 = 1206 325 = 1210 432 = 1812 550 = 2220	**Dielectric** CG = C0G CH = C0H CJ = C0J CK = C0K BJ = X5R, X7R F = Y5V	**Capacitance** 2 significant figures + number of zeros Use "R" for decimal point	**Tolerance** C = ±0.25pF D = ±0.5pF F = ±1% G = ±2% J = ±5% K = ±10% M = ±20% Z = +80,-20%	**Special** Various	**Packaging** T = Reel B = Bulk

▶ TDK : C1608X7R1E104KT

C	1608	X7R	1E	104	K	T
Series	**Size** 0603 = 0201 1005 = 0402 1608 = 0603 2012 = 0805 3216 = 1206 3225 = 1210 4532 = 1812 5650 = 2220	**Dielectric** CG X7R Z5U Y5V	**Voltage** 0J = 6.3V 1A = 10V 1C = 16V 1E = 25V 1H = 50V	**Capacitance** 2 significant figures + number of zeros Use "R" for decimal point	**Tolerance** C = ±0.25pF D = ±0.5pF F = ±1% G = ±2% J = ±5% K = ±10% M = ±20% Z = +80, -20%	**Packaging** T = Reel B = Bulk

▶ VITRAMON : VJ0603Y104KXXMC

VJ	0603	Y	104	K	X	X	M	C
Series	**Size** 0402 0603 0805 1206 1210 1812 2225	**Dielectric** X = BX A,N = C0G Y = X7R U = Z5U H = X8R	**Capacitance** 2 significant figures + number of zeros Use "R" for decimal point	**Tolerance** B = ±0.1pF C = ±0.25pF D = ±0.5pF F = ±1% G = ±2% J = ±5% K = ±10% M = ±20% Z = +80, -20% P = +100, 0%	**Termination** X = Silver, Ni Barrier Tin Plated	**Voltage** J = 16V X = 25V A = 50V B = 100V C = 200V	**Marking** M = Marking A = No Marking	**Packaging** C = 7" Reel Paper T = 7" Reel Plastic P = 13" Reel Paper R = 13" Reel Plastic B = Bulk