

- Common mode EMI mitigation
- Nanocrystalline core material
- Efficient installation
- Stackable
- Flat or vertical mounting

Performance indicators

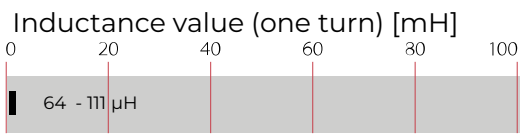

Approvals & Compliances

RoHS

The RR1000 common mode choke series is well suited for non-intrusive EMI mitigation. No further connections are needed for an efficient installation. The chokes are typically applied over cable bundles and need no further electrical connection.

The nanocrystalline ring core technology provides significant attenuation from 150 kHz to 30 MHz.

If cables are looped twice through the core, inductance quadruples. For three turns, inductance increases by factor 9.

Technical Specifications

Rated inductance	64 - 111 µH
Operating frequency	DC to 400 Hz
Design corresponding to	IEC 60938-3
Operation temperature	-40°C to +100°C
Climatic class	40/100/21 (acc. IEC 60068-1)
Cooling	AN

Features and Benefits

- High performance nanocrystalline core material
- EMI mitigation without leakage currents
- Reduction of bearing currents in motors
- Easy installation with no electrical connections
- Chokes can be stacked for higher performance
- EMI mitigation without leakage current

Typical Applications

- Motor protection
- Common mode EMI mitigation for large cable diameters
- 2 line AC or DC
- 3 or four lines AC

Typical electrical schematic

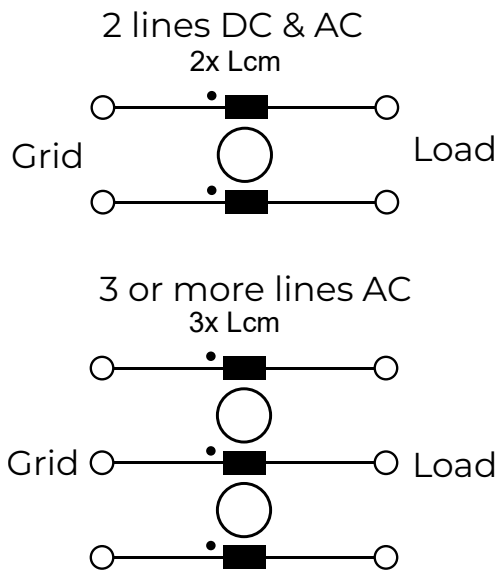

RR1000 Series

Selection table	*Typ. Inductance @ 10kHz	*Typ. Inductance @ 100kHz	Magn. Path	Magn. Area	Outer Diameter	Inner Diameter	Core Height	Weight
	Ls @ 25°C	Ls @ 25°C	Lfe	Afe	OD	ID	W	
	[µH]	[µH]	mm	mm^2	[mm]	[mm]	[mm]	[kg]
RR1000-10	64	19	178	127	68	45	30	0.22
RR1000-20	125	39	204	292	85	45	30	0.55
RR1000-30	79	25	280	254	108	69.5	31	0.68
RR1000-40	111	35	322	410	126.5	78.5	36	1.2
RR1000-50	90	27	361	351	137	93	36	1.18
RR1000-60	56	17	456	293	167	123	31	1.2

*Inductance given for one turn.
Tolerance: 10 kHz +/-30%, 100 kHz +/-45% @100 mV

Typical Attenuation

Per CISPR 17; CM=50 Ω/50 Ω sym; DM=50 Ω/50 Ω asym

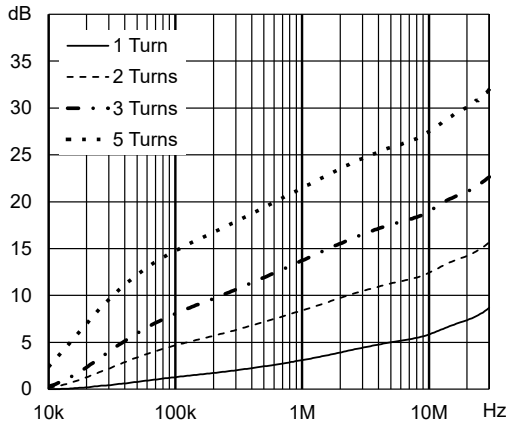

RR1000-10

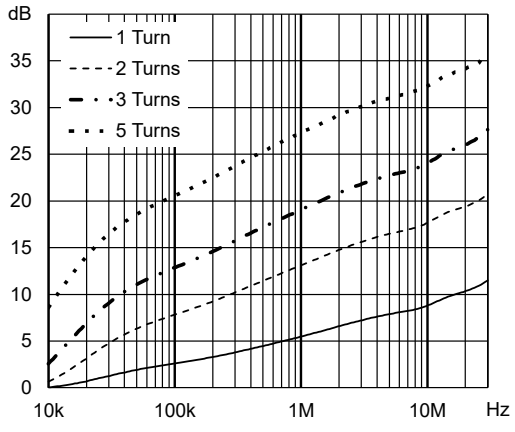

RR1000-20

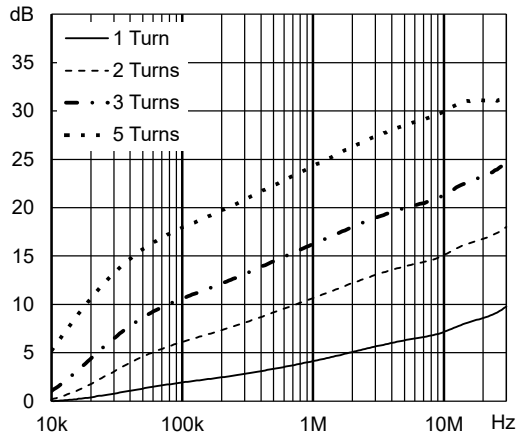

RR1000-30

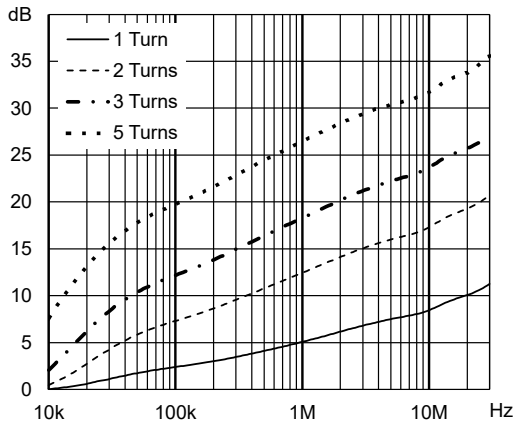

RR1000-40

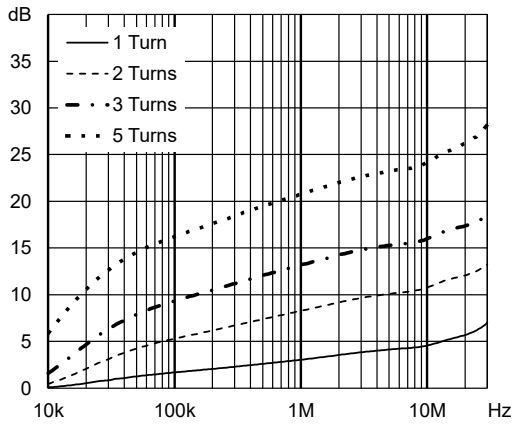

RR1000-50

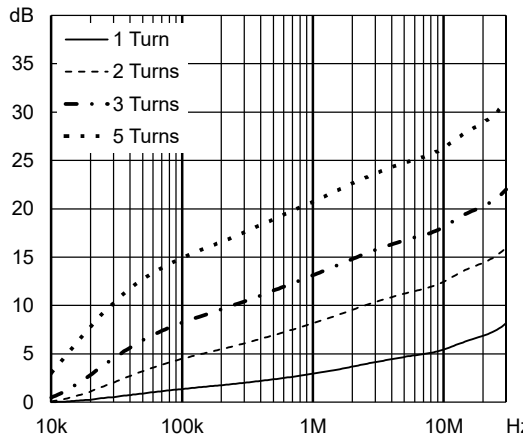

RR1000-60

Typical Impedance

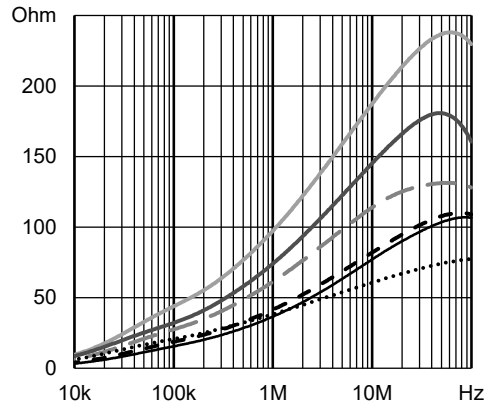

One turn

Dimensions

All dimensions in mm; 1 inch = 25.4 mm
Tolerances according: ISO 2768-m/EN 22768-m

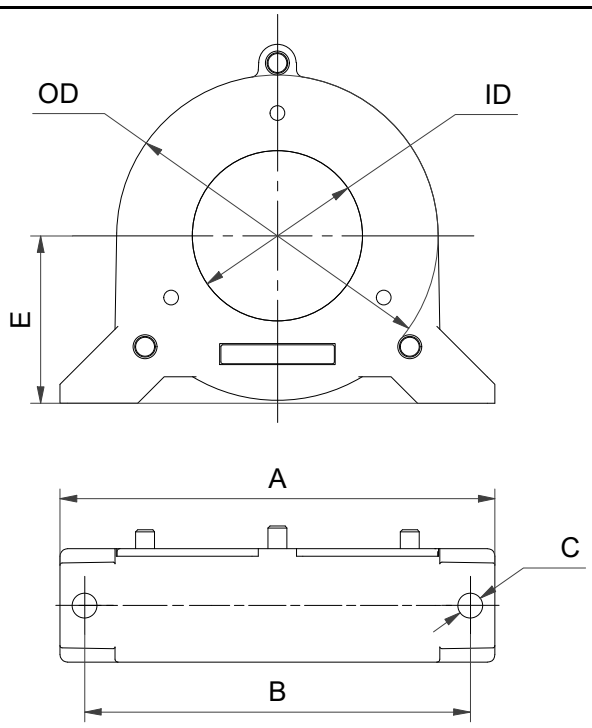

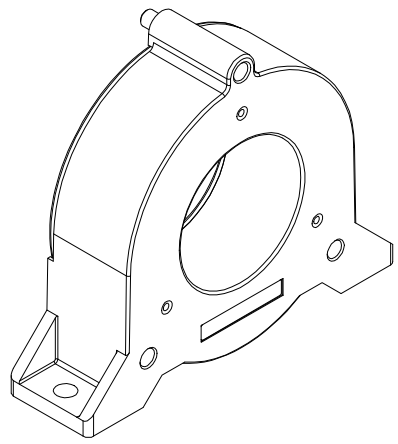

RR1000-10
RR1000-20

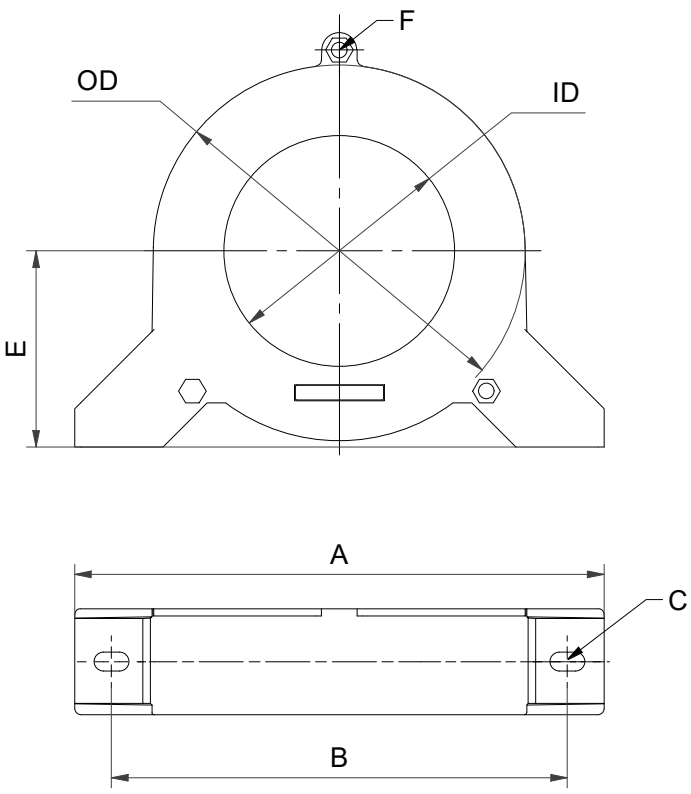

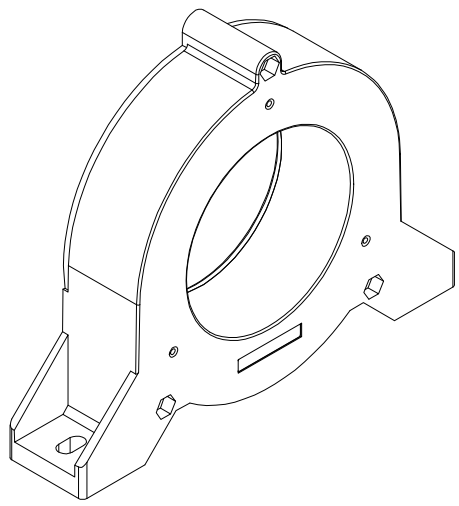

RR1000-30
RR1000-40
RR1000-50
RR1000-60

Dimension table	OD	ID	W	H	A	B	C	E	F	G
	[mm]	[mm]	[mm]	[mm]	[mm]	[mm]	[mm]	[mm]	[mm]	[mm]
RR1000-10	68	45	30	78	98	85	6.5	36	5	6
RR1000-20	85	45	30	95	115	102	6.5	44	5	6
RR1000-30	108	69.5	31	122	170	150	6.5x12	57	Hole for hex cap screw M5	
RR1000-40	126.5	78.5	36	141	180	155	6.5x12	66		
RR1000-50	137	93	36	152	200	175	6.5x12	73		
RR1000-60	167	123	31	182	240	210	6.5x12	88		

Headquarters, Global Innovation and Development

Switzerland
Schaffner Group
Industrie Nord
Nordstrasse 11e
4542
Luterbach
+41 32 681 66 26
info@schaffner.com

To find your local partner within Schaffner's global network schaffner.com

© 2023 Schaffner Group

The content of this document has been carefully checked and understood. However, neither Schaffner nor its subsidiaries assume any liability whatsoever for any errors or inaccuracies of this document and the consequences thereof. Published specifica-tionsw are subject to change without notice. Product suitability for any area of application must ultimately be determined by the customer. In all cases, products must never be operated outside their published specifications. Schaffner does not guarantee the availability of all published products. This disclaimer shall be governed by substantive Swiss law and resulting disputes shall be settled by the courts at the place of business of Schaffner Holding AG. Latest publications and a complete disclaimer can be downloa-ded from the Schaffner website. All trademarks recognized.

Sales and Application Centers

Finland
Schaffner Oy
Sauvonrinne 19 H
8500
Lohja
+358 50 468 7284
finlandsales@schaffner.com

France
Schaffner EMC S.A.S.
16-20 Rue Louis Rameau
95875
Bezons
+33 1 34 34 30 60
francesales@schaffner.com

Germany
Schaffner Deutschland GmbH
Schoemperlenstrasse 12B
76185
Karlsruhe
+49 721 56910
germanysales@schaffner.com

India
Schaffner India Pvt. Ltd
Regus World Trade Centre
WTC 22nd Floor Unit No 2238 Brigade
Gateway Campus 26/1 Dr. Rajkumar Road
Malleshwaram (W)
560055
Bangalore
+91 8067935355
indiasales@schaffner.com

United Kingdom
Schaffner Ltd.
Suite 1 Oakmede Place
Terrace Road
RG42 4JF
Binfield
+44 118 9770070
uksales@schaffner.com

United States
Schaffner EMC Inc.
52 Mayfield Avenue
Edison, New Jersey
+1 732 225 9533
usasales@schaffner.com

Sweden
Schaffner EMC AB
Östermalmstrorg 1
114 42
Stockholm
+46 8 5050 2425
swedensales@schaffner.com

Switzerland
Schaffner EMV AG
Industrie Nord
Nordstrasse 11e
4542
Luterbach
+41 32 681 66 26
switzerlandsales@schaffner.com

Taiwan
Schaffner EMV Ltd.
U-Town
20 Floor-2 No 97 Section 1 XinTai 5th Road
XiZhi District
22175
New Taipei City
+886 226975500
taiwansales@schaffner.com

Italy
Schaffner EMC S.r.l.
Via Ticino, 30
20900
Monza (MB)
+39 039 21 41 070
italysales@schaffner.com

Japan
Schaffner EMC K.K.
ISM Sangenjaya
7F 1-32-12 Kamiuma Setagaya-ku
154-0011
Tokyo
+81 3 5712 3650
japansales@schaffner.com

Singapore
Schaffner EMC Pte Ltd.
Blk 3015A Ubi Road 1 #05-09 Kampong Ubi
Industrial Estate
408705
Singapore
+65 63773283
singaporesales@schaffner.com