Current-Compensated Chokes - Ferrite Core

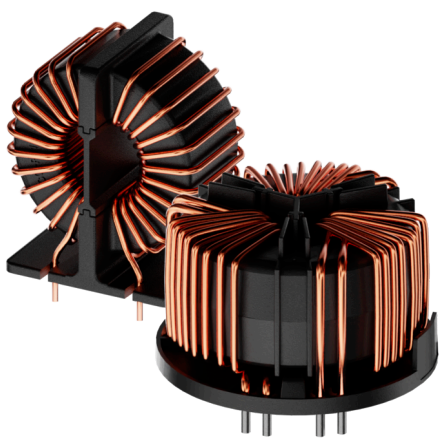

- Rated currents from 6 to 63 A
- Up to 600 VAC and VDC
- 2- and 3-wire configurations
- Horizontal and vertical PCB mounting types
- Ruggedized saturation and thermal behavior
- Open construction for forced and convection cooling
- Straightforward pin-out for easy PCB design
- Ferrite Core Technology

Performance indicators

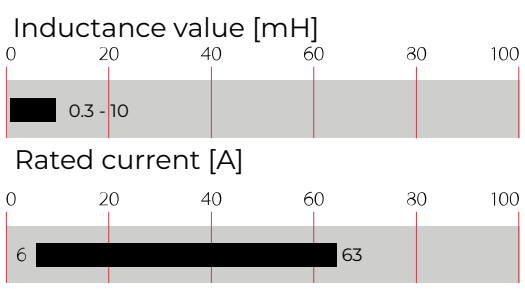

Approvals & Compliances

RoHS

EIS applicable for currents > 20A

RT common-mode chokes are mainly used to filter EMI noise on AC power lines up to 600 VAC. EMI noise of electronic equipment can go to the power lines and disturb the proper function of other devices like communication devices or control logic of robotics. Thus noise generated by the equipment from switched power electronics or by high slew rates of controllers needs to be filtered. RT common-mode chokes are used to suppress EMI noise in PCB integrated filter designs with line bypass capacitors or in combination with single phase filters for extra low leakage filter designs.

Features and Benefits

- Cost-effective PCB designs for up to 100 A with forced cooling *
- EIS (electrical insulation system E332676) for currents > 20A acc. to UL 1446
- Compact size and light weight
- Low magnetic leakage flux
- Excellent winding insulation
- Standardized foot print
- Broad range of inductance ratings
- Custom-specific versions on request

Typical Applications

- AC and DC filtering for midsize power range drives, photovoltaic inverters, fast chargers, EV charging stations, UPS and switch mode power supplies
- Filter with low leakage current noise or improved immunity against grid disturbances
- Electronic devices, automation and (industrial) LED lighting
- Communication devices
- Medical and laboratory equipment
- Converters

Technical Specifications

Rated currents	6 to 63 A @ 60°C
Operating frequency	DC to 400 Hz
Creepage and clearance distances	Creepage & Clearance (2-line): ≥ 3.5 mm (Coil - Coil) / ≥ 3.0 mm (Coil-Core) Creepage & Clearance (3-line): ≥ 6.3 mm (Coil - Coil) / ≥ 5.5 mm (Coil-Core)
High potential test voltage	3 kV DC 3s (coil to coil) Repetition with max. 80% of the HV test voltage
Rated inductance	0.3 to 6 mH (3-line) 0.5 to 10 mH (2-line)
Operating voltage	300 VAC/425 VDC (2-line) 600 VAC (3-line)
Overvoltage category	III (acc. IEC 60664-1)
Pollution degree	PD2 (acc. IEC60664-1)
Stray inductance	Max. 1% of rated inductance (@ 100 kHz 1 V, 0 A)
Temperature range (operation and storage)	-40°C to +100°C (6 to 20 A) / -40°C to +125°C (25 to 63 A)
Climatic category	40/100/56 (acc. IEC 60068-1) (6 to 20 A) / 40/125/56 (acc. IEC 60068-1) (25 to 63 A)
Altitude	2'000 m, current and voltage derating above
Flammability corresponding to	UL 94 V0
Vibration and shock	3M4 (according IEC 60721-3-3)
Design corresponding to	UL/IEC 60938-1/-2 UL1446 (>20A)
MTBF (Mil-HB-217F)	>2,000,000 h @ 60°C/300 V

RT Series

Selection table	Buy	Convection cooling nominal current @ 60˚C [A]	*Forced cooling 3 m/s nominal current @ 60˚C [A]	Inductance Ln @ 25˚C 100kHz [mH/path]	Resistance R @ 25˚C [mΩ/path]	Choke [size]	***Ø Pin ±0.1 ØP [mm]	Weight [g]
Horizontal 2-line								
RT8122-6-10M0		6	9.5	10.0	33.0	1	1.1	80
RT8122-8-8M0		8	12.5	8.0	21.0	1	1.3	80
RT8122-10-6M0		10	16	6.0	16.0	1	1.4	80
RT8122-12-5M0		12	19	5.0	14.0	2	1.5	100
RT8122-16-4M0		16	27	4.0	10.0	2	1.8	110
RT8122-20-3M0		20	32	3.0	7.0	3	2	160
RT8122-32-1M5		32	51	1.5	3.4	13	2.36	200
RT8122-40-1M2		40	64	1.2	2.2	13	2.8	210
RT8122-50-1M0		50	80	1.0	1.7	14	2x2.2	270
RT8122-63-0M5		63	100	0.5	1.1	14	2x2.36	260
Vertical 2-line								
RT8522-6-10M0		6	9.5	10.0	33.0	4	1.1	70
RT8522-8-8M0		8	12.5	8.0	21.0	4	1.3	80
RT8522-10-6M0		10	16	6.0	16.0	4	1.4	80
RT8522-12-5M0		12	19	5.0	14.0	5	1.5	90
RT8522-16-4M0		16	27	4.0	10.0	5	1.8	110
RT8522-20-3M0		20	32	3.0	7.0	6	2.0	150
RT8522-32-1M5		32	51	1.5	3.4	15	2.36	210
RT8522-40-1M2		40	64	1.2	2.2	15	2.8	220
RT8522-50-1M0		50	80	1.0	1.7	16	2x2.2	280
RT8522-63-0M5		63	100	0.5	1.0	16	2x2.36	270
Horizontal 3-line								
RT8132-6-6M0		6	9.5	6.0	27.0	7	1.1	80
RT8132-8-4M8		8	12.5	4.8	17.0	7	1.3	90
RT8132-10-4M0		10	16	4.0	15.0	8	1.5	110
RT8132-12-3M6		12	19	3.6	12.0	8	1.6	120
RT8132-16-3M0		16	27	3.0	8.0	9	1.8	170
RT8132-20-2M5		20	32	2.5	7.0	9	2.1	190
RT8132-25-1M5		25	40	1.5	3.5	17	2.4	240
RT8132-32-1M2		32	51	1.2	2.5	17	2.4	240
RT8132-40-0M7		40	64	0.7	1.9	18	2x1.9	270
RT8132-50-0M5		50	80	0.5	1.2	18	2x2.2	290
RT8132-63-0M3		63	100	0.3	0.7	18	2x2.6	300
Vertical 3-line								
RT8532-6-6M0		6	9.5	6.0	27.0	10	1.1	90
RT8532-8-4M8		8	12.5	4.8	17.0	10	1.3	90
RT8532-10-4M0		10	16	4.0	15.0	11	1.5	110
RT8532-12-3M6		12	19	3.6	12.0	11	1.6	120
RT8532-16-3M0		16	27	3.0	8.0	12	1.8	160
RT8532-20-2M5		20	32	2.5	7.0	12	2.1	190
RT8532-25-1M5		25	40	1.5	3.5	19	2.4	250
RT8532-32-1M2		32	51	1.2	2.5	19	2.4	250
RT8532-40-0M7		40	64	0.7	1.9	20	2x1.9	290
RT8532-50-0M5		50	80	0.5	1.2	20	2x2.2	290
RT8532-63-0M3		63	100	0.3	0.8	20	2x2.6	310

Test conditions: Inductance tolerance: +50%, –30%; Resistance tolerance: +15% @ 25°C; Electrical characteristics @ 25°C: ±2°C

* typical current for forced cooling with 3 m/s. Due to the possible turbulences and degradation of the air stream within an equipment please consider thermal validation.

** typical stray inductance, max is 0.1% of Ln

*** Length of pin (Dimension P) is always 5.5 mm ± 1

Product selector

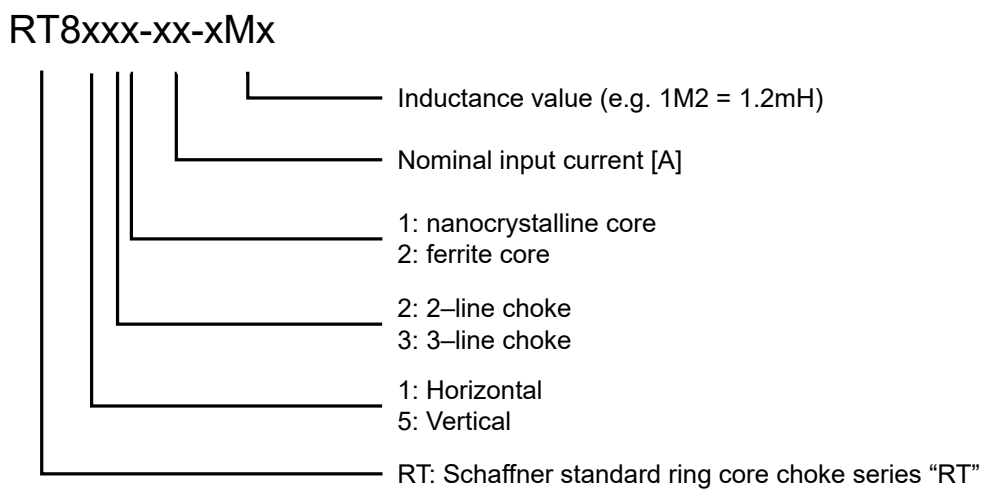

Examples: RT8532-16-3M0: Vertical 3-line choke for 16 A, with 3 mH ; RT8122-20-3M0: Horizontal 2-line choke for 20 A, with 3 mH

Distribution Inventory

Up-to-date inventory levels for global distributors is available at

https://products.schaffner.com/stock

Typical Choke Attenuation And Impedance - 2-Line Versions

Per CISPR 17; 50 Ω/50 Ω asym

RT8x22-6-10M

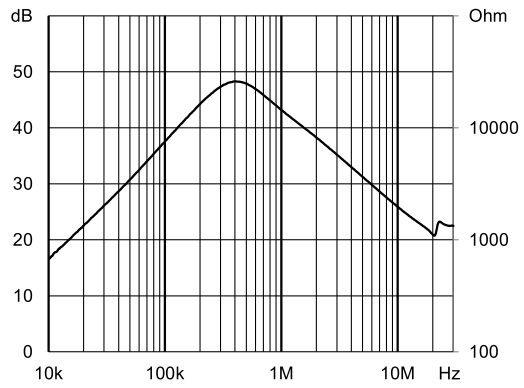

RT8x22-8-8M0

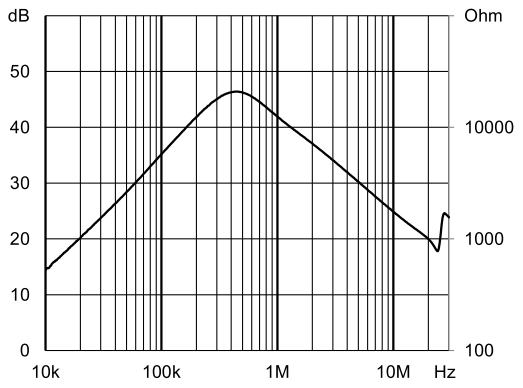

RT8x22-10-6M0

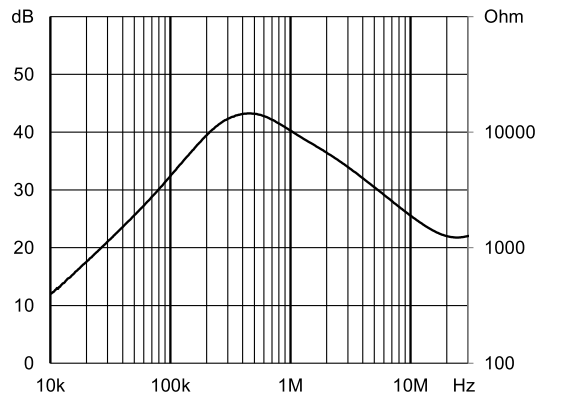

RT8x22-12-5M0

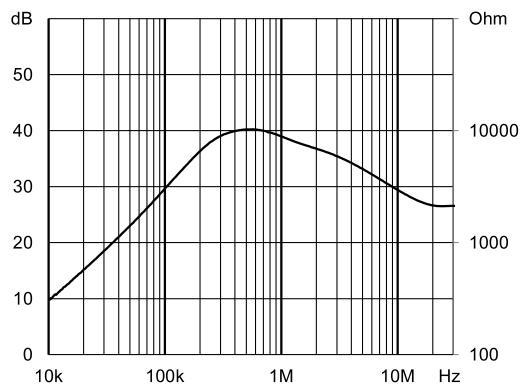

RT8122-16-4M0

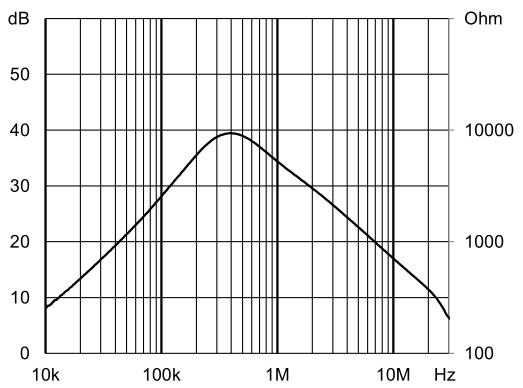

RT8122-20-3M0

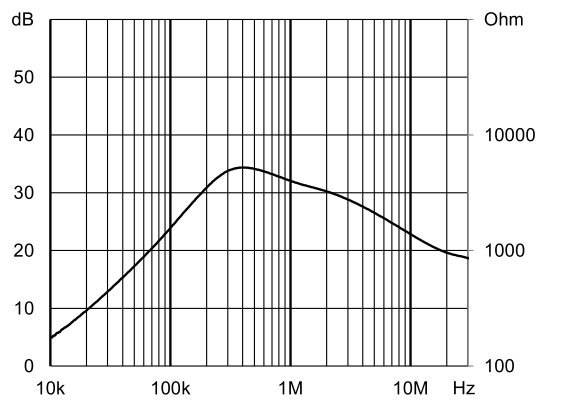

RT8x22-32-1M5

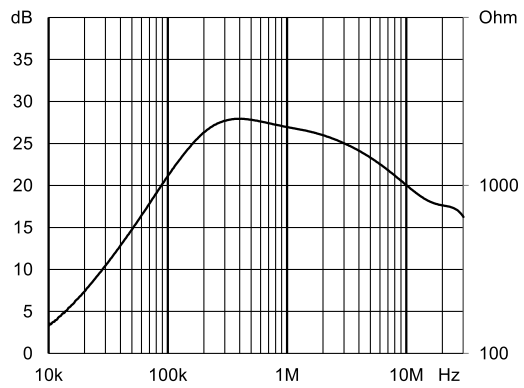

RT8x22-40-1M2

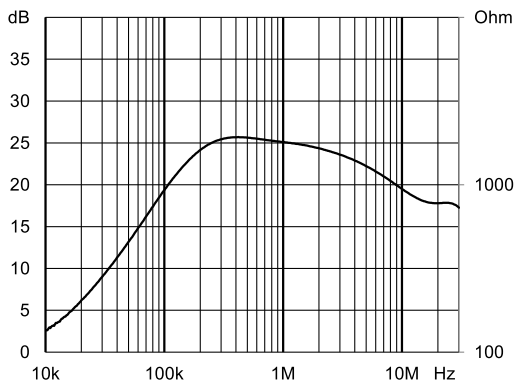

RT8x22-50-1M0

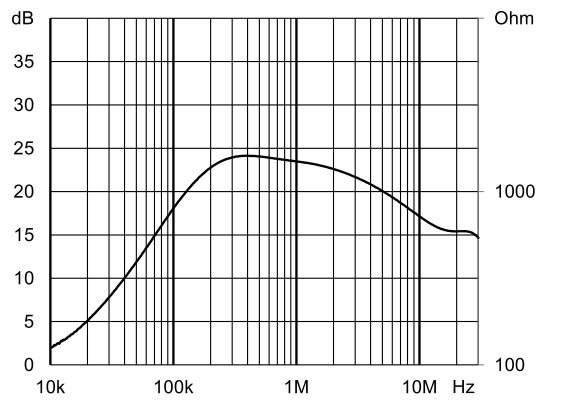

RT8x22-63-0M5

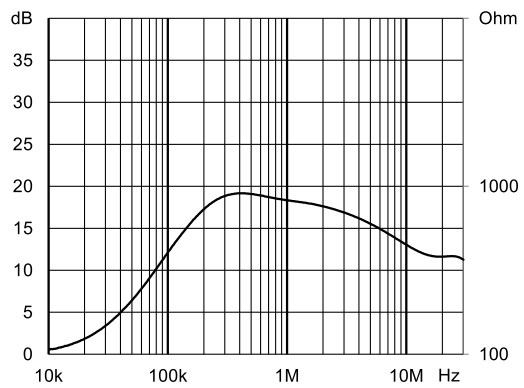

Typical Choke Attenuation And Impedance - 3-Line Versions

Per CISPR 17; 50 Ω/50 Ω asym

RT8x32-6-6M0

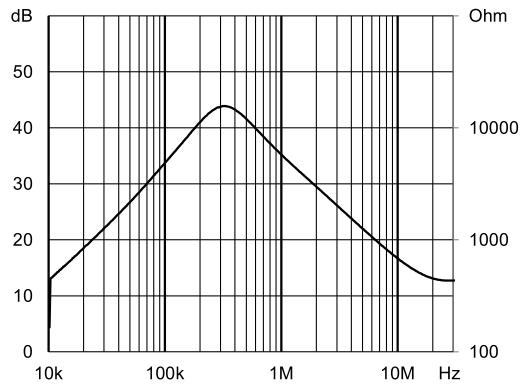

RT8x32-8-4M8

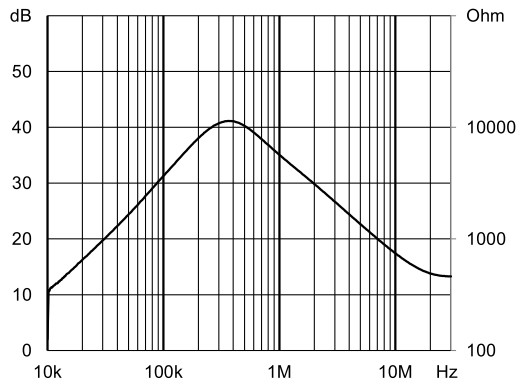

RT8x32-10-4M0

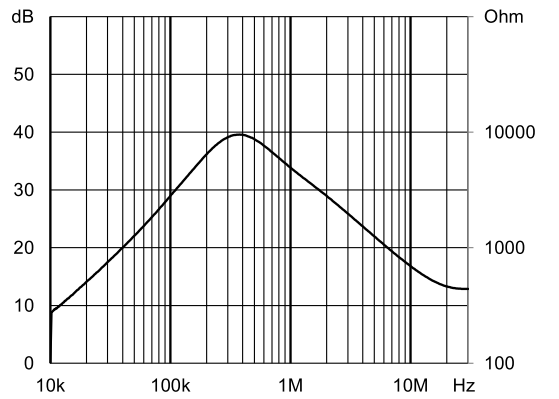

RT8x32-12-3M6

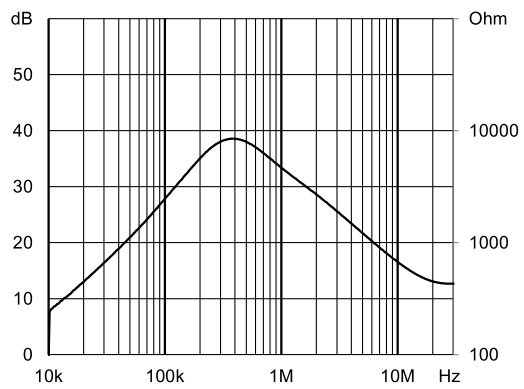

RT8x32-16-3M0

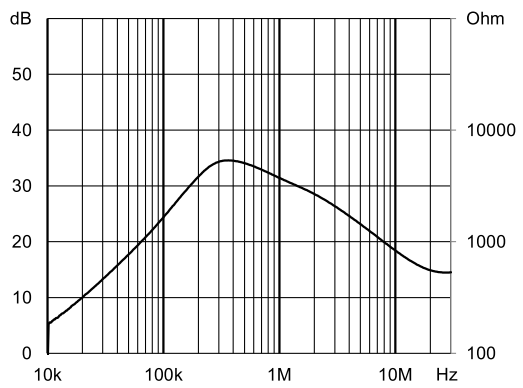

RT8x32-20-2M5

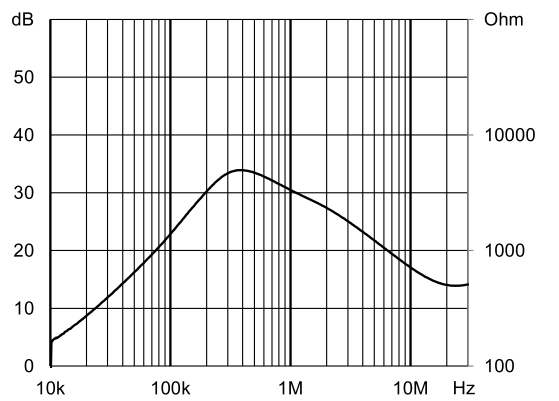

RT8x32-25-1M5

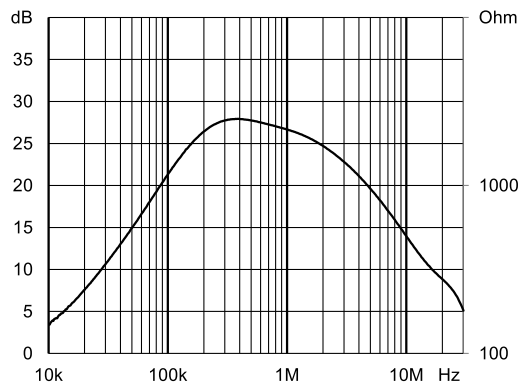

RT8x32-32-1M2

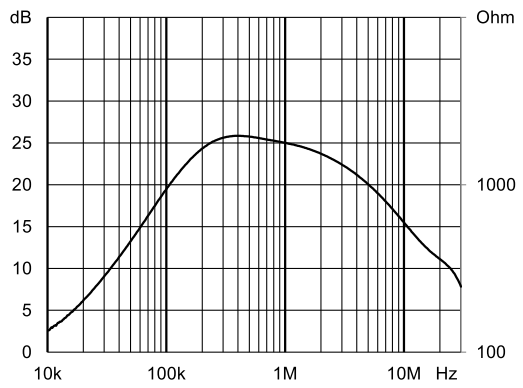

RT8x32-40-0M7

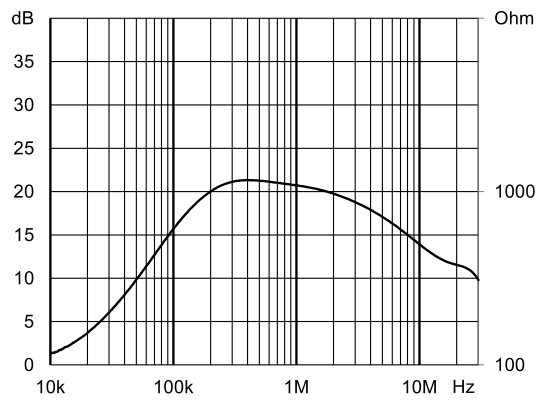

RT8x32-50-0M5

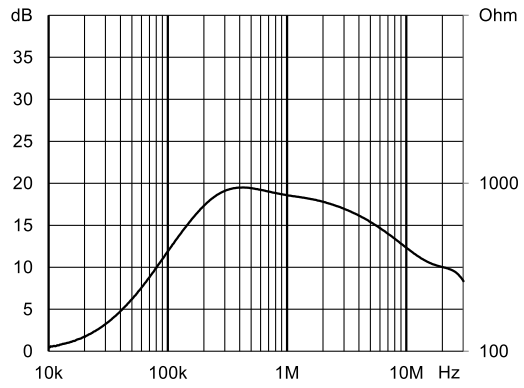

RT8x32-63-0M3

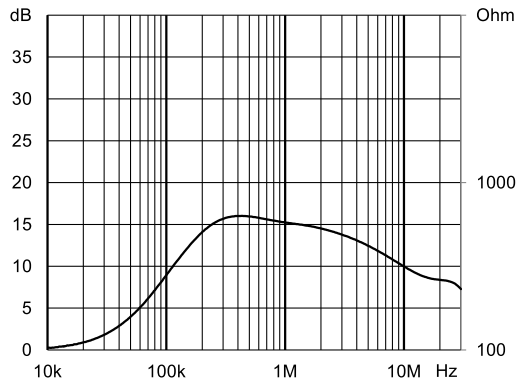

Mechanical Data: Horizontal Chokes (2-line And 3-line Up To Size 12)

All dimensions in mm; 1 inch = 25.4 mm
Tolerances according: ISO 2768-m/EN 22768-m

Horizontal 2-line chokes (Size 1-3)

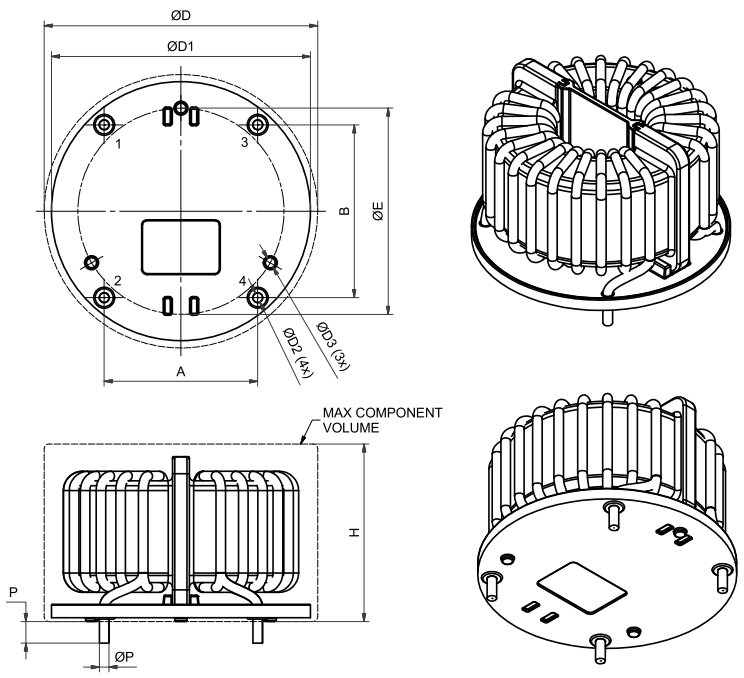

Horizontal 3-line chokes (Size 7-9)

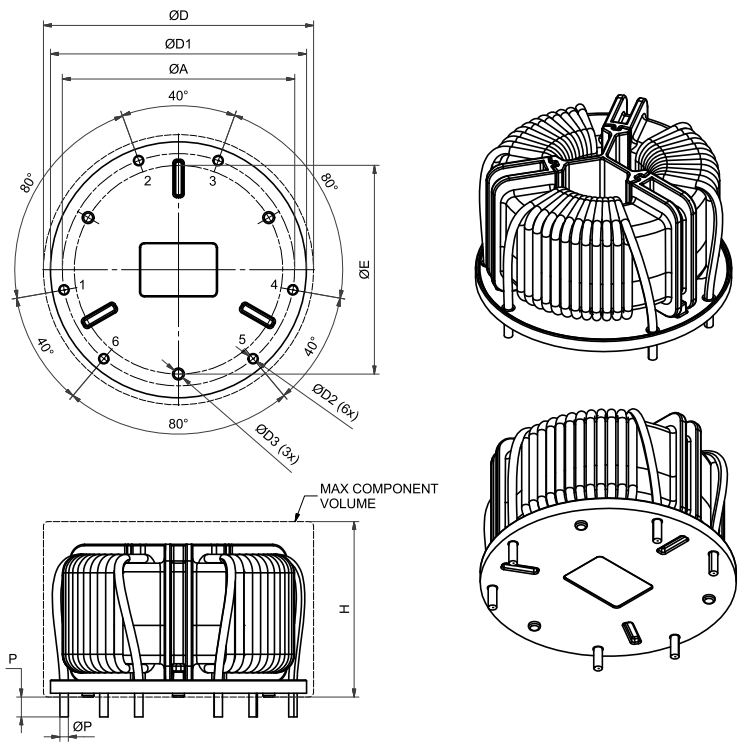

Dimensions

	A	B	ØD	H	ØD1	ØD2	ØD3	ØE
	(±0.5)	(±0.5)	(max)	(max)	(±0.5)			
Size1 (RT8122-6-10M0, RT8122-8-8M0, RT8122-10-6M0)	21	25	45	34	42	1.5	2.5	36
Size2 (RT8122-12-5M0, RT8122-16-4M0)	26	30	51	33	48	1.9	2.5	40
Size3 (RT8122-20-3M0)	32	36	57	37	54	2.1	2.5	43
Size 7 (RT8132-6-6M0, RT8132-8-4M8)	38	-	46	34	43	1.4	2.5	35
Size 8 (RT8132-10-4M0,RT8132-12-3M6)	44	-	51	33	48	1.7	2.5	40
Size 9 (RT8132-16-3M0, RT8132-20-2M5)	49	-	57	37	54	2.3	2.5	44

Pin material: Copper (base), Sn (final plating typical thickness 0.15 mm; composition: Sn-1.2AG-4Cu or SN-3Cu-0.25Ni)

Please visit www.schaffner.com to find more details on filter connections.

Mechanical Data: Vertical Chokes (2-line And 3-line Up To Size 12)

All dimensions in mm; 1 inch = 25.4 mm
Tolerances according: ISO 2768-m/EN 22768-m

Vertical 2-line chokes (Size 4-6)

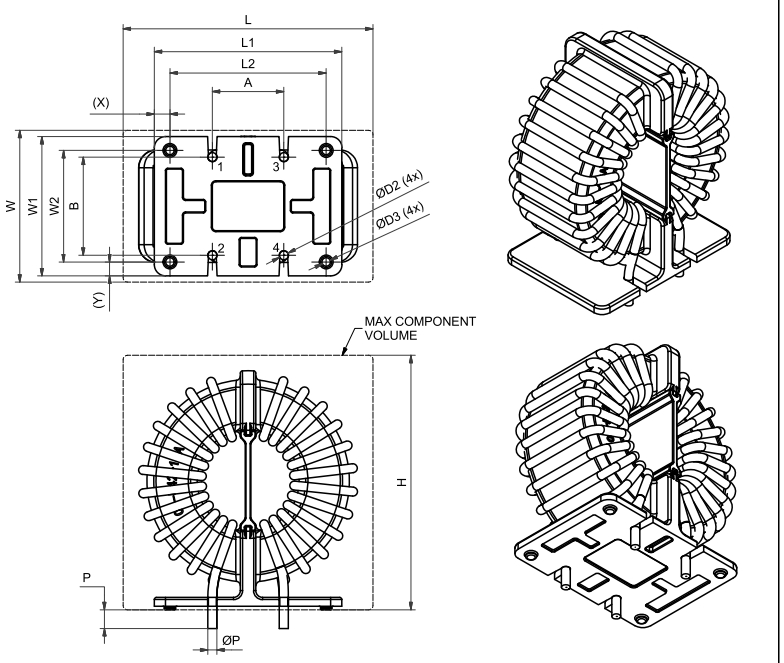

Vertical 3-line chokes (Size 10-12)

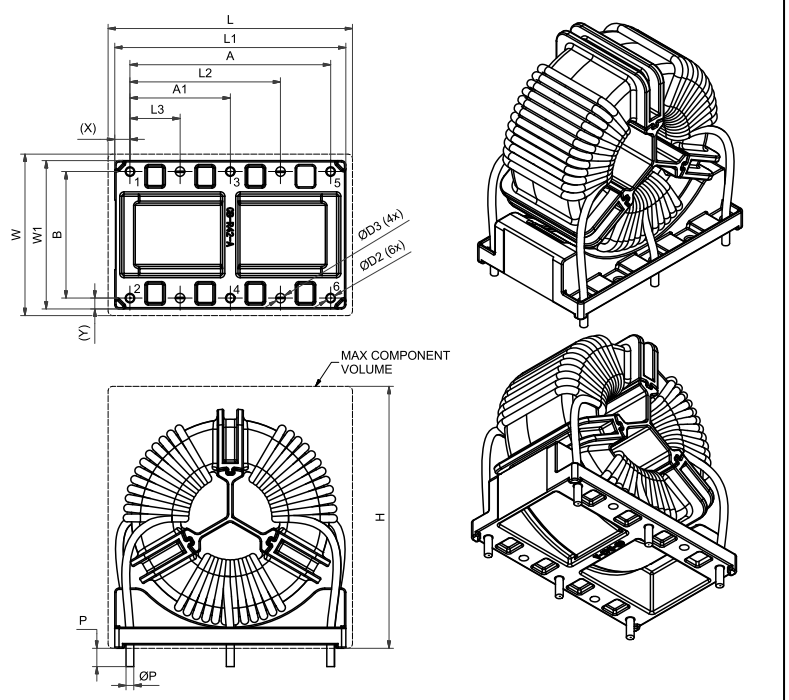

Dimensions

	A	A1	B	L	W	H	L1	L2	L3	W1	W2	ØD2	ØD3	X	Y
	(±0.5)	(±0.5)	(±0.5)	(max)	(max)	(max)	(±0.5)	(±0.5)		(±0.5)	(±0.5)				
Size 4 (RT8522-6-10M0, RT8522-8-8M0, RT 8522-10-6M0)	16	-	20	43	32	44	32	26	-	27.8	22	1.5	2.5	3	2.9
SIze 5 (RT8522-12-5M0, RT8522-16-4M0)	16	-	22	50	32	52	39	33	-	27	23	1.9	2.5	3	2
Size 6 (RT8522-20-3M0)	16	-	22	56	32	57	42	35	-	31.2	25	2.1	2.5	3.5	3.1
Size 10 (RT8532-6-6M0, RT8532-8-4M8)	36	18	24	44	32	47	41	27	9	29	-	1.4	1.4	2.5	2.5
Size 11 (RT8532-10-4M0,RT8532-12-3M6)	38	19	24	49	34	53	46	28.5	9.5	31	-	1.7	1.7	4	3.5
Size 12 (RT8532-16-3M0, RT8532-20-2M5)	46	23	29	56	37	60	53	34.5	11.5	34	-	2.2	2.2	3.5	2.5

Pin material: Copper (base), Sn (final plating typical thickness 0.15 mm; composition: Sn-1.2AG-4Cu or SN-3Cu-0.25Ni)

Please visit www.schaffner.com to find more details on filter connections.

Mechanical Data: Vertical And Horizontal Chokes

All dimensions in mm; 1 inch = 25.4 mm
Tolerances according: ISO 2768-m/EN 22768-m

Horizontal 2-line chokes (Size 13 & 14)

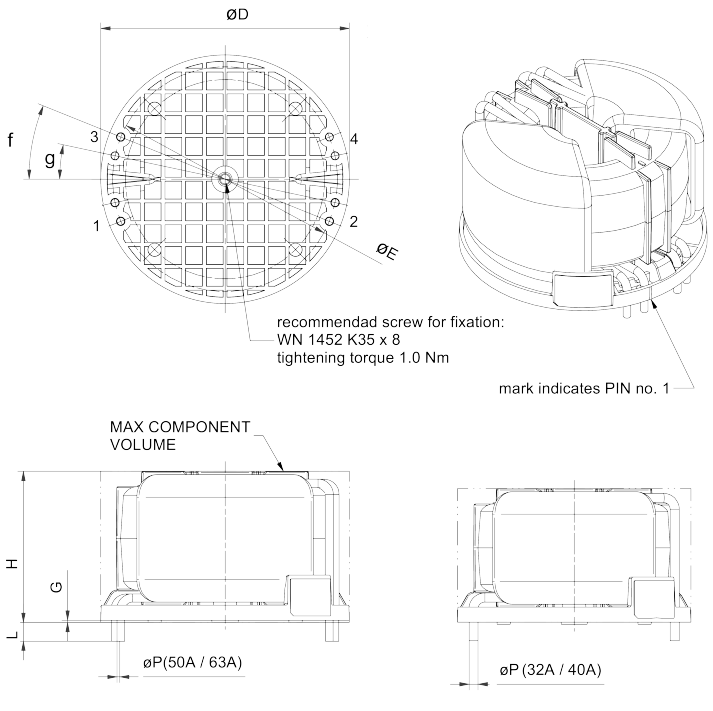

Horizontal 3-line chokes (Size 17 & 18)

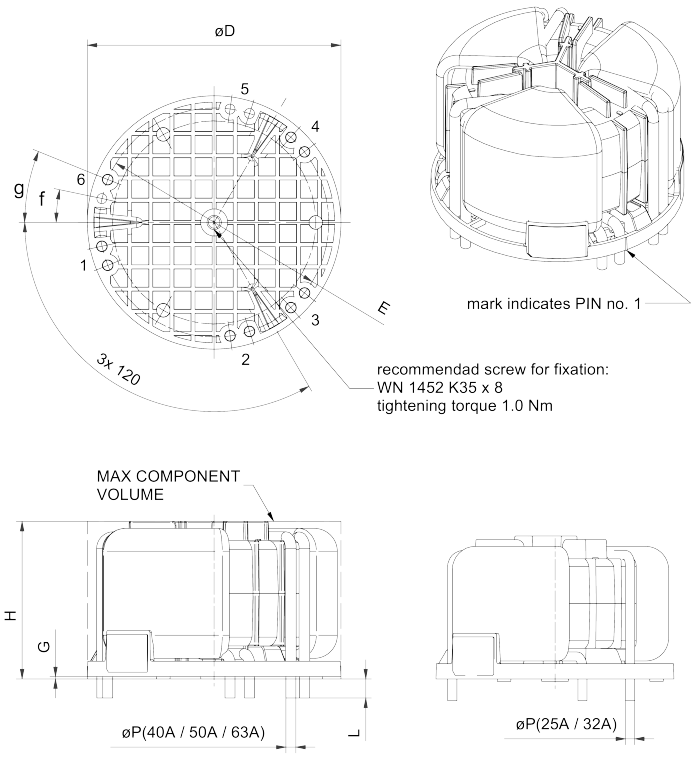

Dimensions

	øD	H	G	øE	f	g	L	øP	øP	øP	øP	øP
								(25A)	(32A)	(40A)	(50A)	(63A)
	±0.2	(max)	±0.1	±0.2	±1°	±1°	±0.5	±0.1	±0.1	±0.1	±0.1	±0.1
Size 13 (RT8122-32-1M5, RT8122-40-1M2)	62	37	0.6	55.4	15°		5		2.4	2.8		
Size 14 (RT8122-50-1M0, RT8122-63-0M5)	66	41	0.6	59.8	12°	22°	5				2.2	2.2
Size 17 (RT8132-25-1M5, RT8132-32-1M2)	62	38	0.6	55.4	15°		5	2.4	2.4			
Size 18 (RT8132-40-0M7, RT8132-50-0M5, RT8132-63-0M3)	66	42	0.6	59.8	12°	22°	5			1.9	2.2	2.6

Mechanical Data: Vertical And Horizontal Chokes

All dimensions in mm; 1 inch = 25.4 mm
Tolerances according: ISO 2768-m/EN 22768-m

Vertical 2-line chokes (Size 15 & 16)

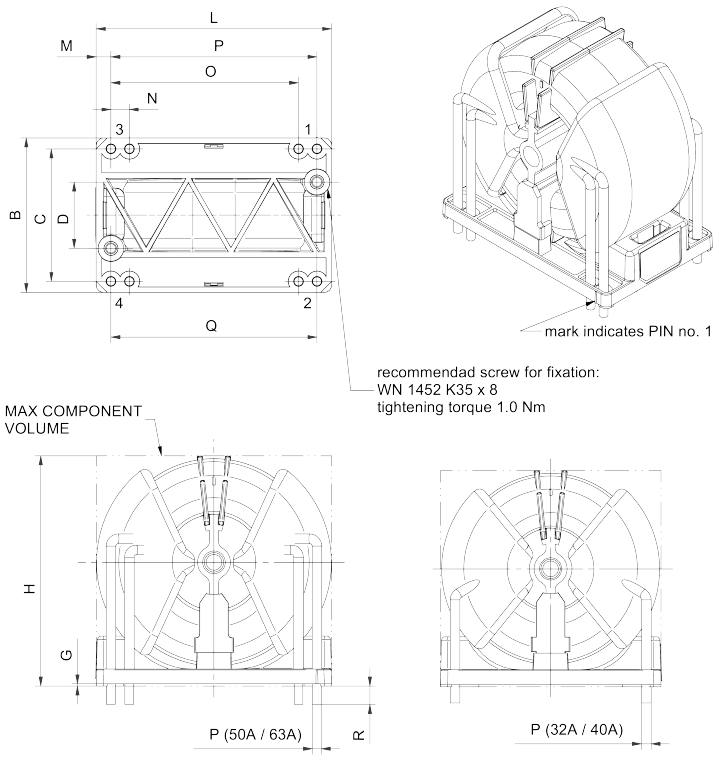

Vertical 3-line chokes (Size 19 & 20)

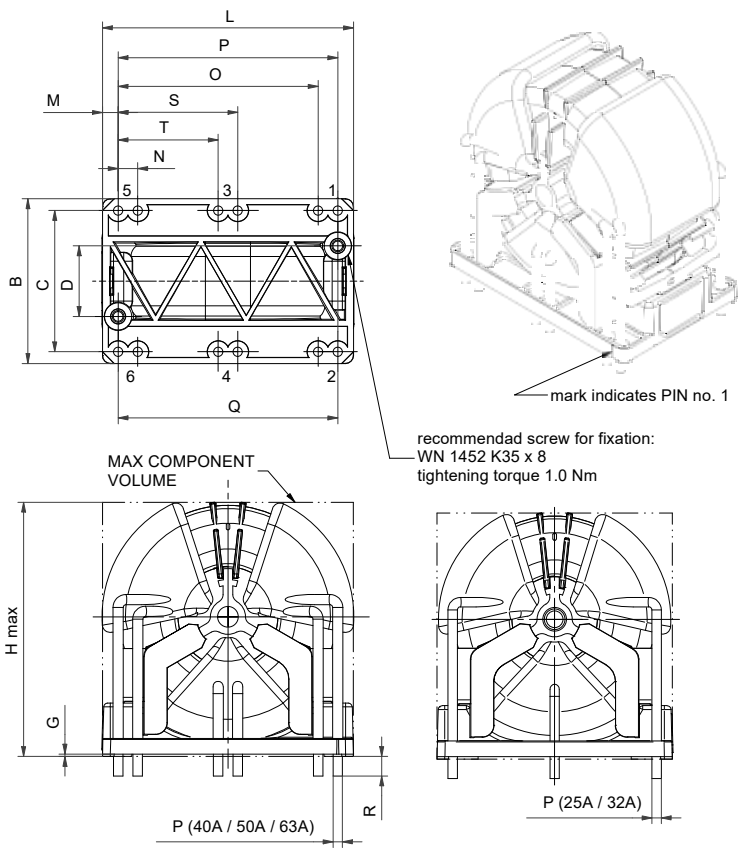

Dimensions

1

	H	G	B	C	D	L	M	N	O	P	Q	S	T	R	øP (25A)	øP (32A)	øP (40A)	øP (50A)	øP (63A)
		±0.1	±0.2	±0.4	±0.2	±0.2	±0.1	±0.4	±0.4	±0.4	±0,4	±0.4	±0.2	±0.5	±0.1	±0.1	±0.1	±0.1	±0.1
Size 15 (RT8522-32-1M5, RT8522-40-1M2)	60	0.6	38	32	12	60	4			52	46			5		2.4	2.8		
Size 16 (RT8522-50-1M0, RT8522-63-0M5)	64	0.6	42	36	18	64	4	5	51	56	56			5				2.2	2.2
Size 19 (RT8532-25-1M5, RT8532-32-1M2)	63	0.6	38	32	12	60	4			52	46		26	5	2.4	2.4			
Size 20 (RT8532-40-0M7, RT8532-50-0M5, RT8532-63-0M3)	67	0.6	42	36	18	64	4	5	51	56	56	30.5	25.5	5			1.9	2.2	2.6

Soldering Profile

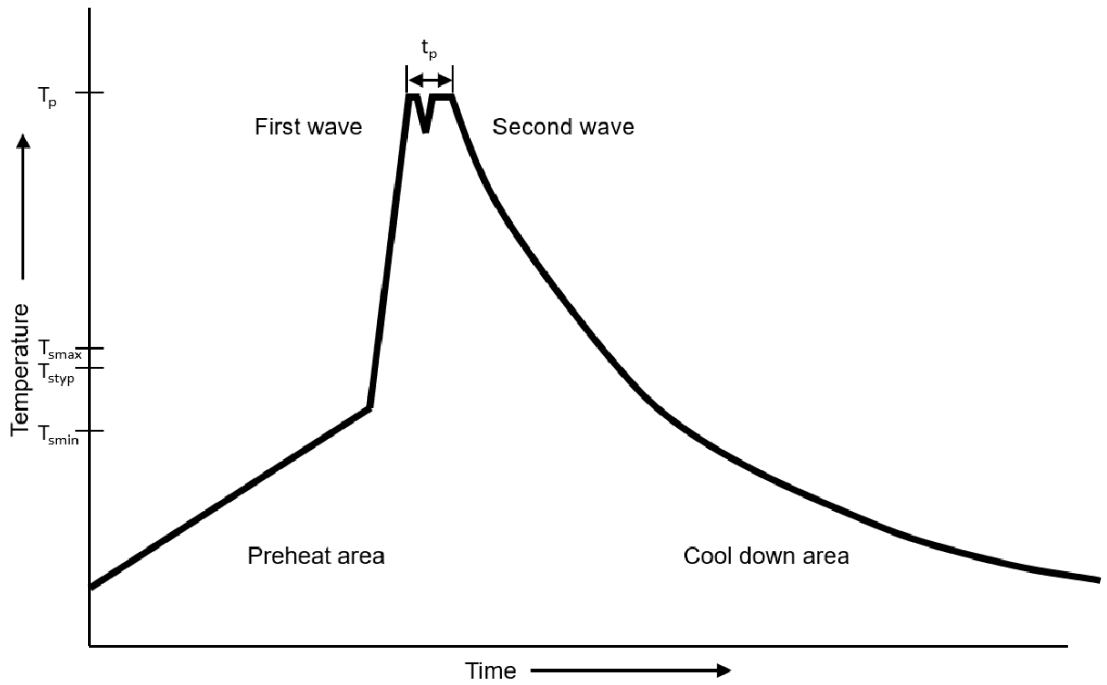

Reference IEC61760-1:2020

Profile Feature		Lead (Pb) Free Solder
Preheat	Temperature min. (T_{smin})	100 °C
	Temperature typ. (T_{styp})	120 °C
	Temperature max. (T_{smax})	130 °C
	Time (T_{smin} to T_{smax})(t_s)	70 seconds
ΔPreheat to max	Temperature	150 °C max.
Peak temperature (T_p)		250 °C – 260 °C
Time at peak temperature (t_p)		6 seconds max. 2 seconds each wave
Ramp-down rate		~ 2 K/s min. ~ 3.5 K/s typ. ~ 5 K/s max.
Time 25 °C to 25 °C		4 minutes

Manual solder

350 °C ±10 °C, 10 seconds ± 1s (by soldering iron).

Headquarters, Global Innovation and Development

Switzerland
Schaffner Group
Industrie Nord
Nordstrasse 11e
4542
Luterbach
+41 32 681 66 26
info@schaffner.com

To find your local partner within Schaffner's global network schaffner.com

© 2024 Schaffner Group

The content of this document has been carefully checked and understood. However, neither Schaffner nor its subsidiaries assume any liability whatsoever for any errors or inaccuracies of this document and the consequences thereof. Published specifica-tionsw are subject to change without notice. Product suitability for any area of application must ultimately be determined by the customer. In all cases, products must never be operated outside their published specifications. Schaffner does not guarantee the availability of all published products. This disclaimer shall be governed by substantive Swiss law and resulting disputes shall be settled by the courts at the place of business of Schaffner Holding AG. Latest publications and a complete disclaimer can be downloa-ded from the Schaffner website. All trademarks recognized.

Sales and Application Centers

Finland
Schaffner Oy
Lohjanharjuntie 1109
08500
Lohja
+ 358 50 468 72 84
finlandsales@schaffner.com

France
Schaffner EMC S.A.S.
16-20 Rue Louis Rameau
95875
Bezons
+33 1 34 34 30 60
francesales@schaffner.com

Germany
Schaffner Deutschland GmbH
Ohiostr. 8
76149
Karlsruhe
+49 721 56910
germanysales@schaffner.com

Italy
Schaffner EMC S.r.l.
Via Ticino, 30
20900
Monza (MB)
+39 039 21 41 070
italysales@schaffner.com

Japan
Schaffner EMC K.K.
ISM Sangenjaya 7F
1-32-12 Kamiuma Setagaya-ku
154-0011
Tokyo
+81 3 5712 3650
japansales@schaffner.com

Singapore
Schaffner EMC Pte Ltd.
Blk 3015A Ubi Road 1 #05-09 Kampong Ubi Industrial Estate
408705
Singapore
+65 63773283
singaporesales@schaffner.com

Sweden
Schaffner EMC AB
Östermalmstrorg 1
114 42
Stockholm
+46 8 5050 2425
swedensales@schaffner.com

Switzerland
Schaffner EMV AG
Industrie Nord
Nordstrasse 11e
4542
Luterbach
+41 32 681 66 26
switzerlandsales@schaffner.com

India
Schaffner India Pvt. Ltd
Regus World Trade Centre
WTC 22nd Floor Unit No 2238 Brigade Gateway Campus 26/1 Dr. Rajkumar Road
Malleshwaram (W)
560055
Bangalore
+91 8067935355
indiasales@schaffner.com

United Kingdom
Schaffner Ltd.
Suite 1 Oakmede Place
Terrace Road
RG42 4JF
Binfield
+44 118 9770070
uksales@schaffner.com

United States
Schaffner EMC Inc.
52 Mayfield Avenue
Edison, New Jersey
+1 732 225 9533
usasales@schaffner.com