schaffner
MORE POWER TO YOU

Current-compensated Chokes - Ferrite Core





- Efficient ferrite core material
- AC and DC applications
- Low magnetic leakage flux
- Excellent winding insulation
- Broad range of inductance ratings
- RV8**1**40 - horizontal orientation
- RV8**5**40 - vertical orientation

Performance indicators

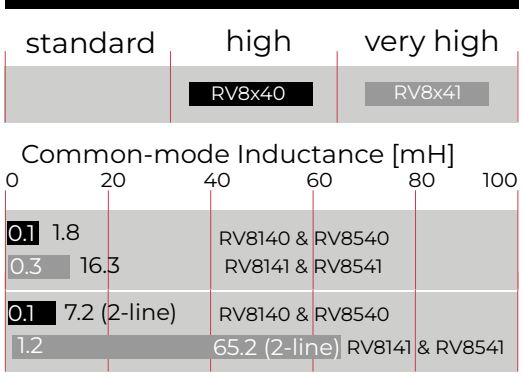

Technical Specifications

Rated currents	16 to 50 A @ 60°C
Operating frequency	50/60 Hz DC
Creepage and clearance distances	Creepage: ≥ 7.2 mm (Coil - Coil) Clearance: ≥ 5.6 mm (Coil - Coil)
High potential test voltage	3 kV AC 2s coil to coil
Rated inductance	0.1 to 1.8 mH (4-line or parallel connection) 0.1 to 7.2 mH (2-line, series connection)
Operating voltage	530 VAC RMS 1000 VDC
Overvoltage category	530 VAC: III (acc. IEC 60664-1) 1000 VDC: II (acc. IEC 60664-1)
Pollution degree	PD2 (acc. IEC60664-1)
Stray inductance	Max. 1% of rated inductance @ 10 kHz
Temperature range (operation and storage)	-40°C to +125°C
Climatic category	40/125/56 (acc. IEC 60068-1)
Cooling	AN
Altitude	2000 m, current and voltage derating above
Protection category	IP 00 (acc. IEC 60529-1)
Flammability corresponding to	UL 94 V0
Vibration and shock	Vibration (IEC 60068-2-6): 10 Hz to 55 Hz (24 cycles) Shock (IEC 60068-2-27): 30 G / 18 ms (3 cycles)
Design corresponding to	IEC 60938-1/-2 UL 1446 E332676 - Insulation system SCH-155(F)-C
MTBF (Mil-HB-217F)	>2,000,000 h @ 60°C/530 V

Approvals & Compliances

RoHS

Features and Benefits

EV wallbox chargers up to 35kW

- On the grid side, the 4-line choke can be installed as 3 phases and neutral
- On the vehicle side of the charger (DC charging), 2 windings of the choke are connected in series or parallel
- Complies with choke-related requirements in IEC/EN 61851-1: Electric vehicle conductive charging system, IEC/EN 61851-21-2 (AC charging) & IEC/EN 61851-23: (DC charging)
- Complies with choke-related requirements in UL 2202: Electric Vehicle (EV) Charging System Equipment

Horizontal Version - Four Performance Choices

- S01 Standard
- S03 Standard Plus- increased height
- S11 Small
- S13 Small - increased height

Vertical Version - Four Performance Choices

- S02 Standard
- S06 Standard, thin - reduced core height
- S12 Small
- S16 Small, thin- reduced core height

Also available with nanocrystalline cores: RV8141 (horizontal) & RV8541 (vertical)

Typical Applications

- EV charging: (AC & DC charging stations)
- General applications

Typical electrical schematic

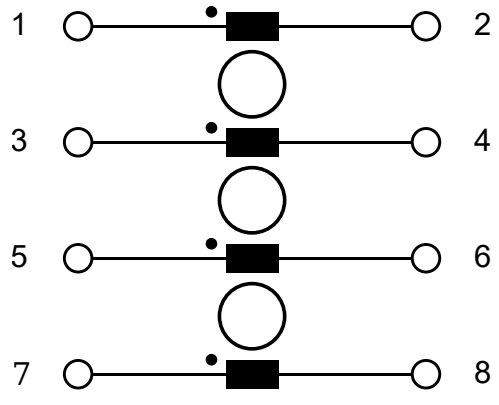

Choke Selection Table

Designation	Orientation	Rated Current	Frame Size	Inductance*	Inductance*	Resistance*	Weight
		@ 60°C		10kHz	100kHz		
		[A]		[mH]	[mH]	[mOhm]	[kg]
RV8140-16-S01	Horizontal	16	1	1.25	0.88	6.5	0.25
RV8140-16-S03	Horizontal	16	3	1.76	1.24	8.1	0.36
RV8140-16-S11	Horizontal	16	11	0.93	0.65	6.5	0.18
RV8140-16-S13	Horizontal	16	13	1.35	0.95	8	0.26
RV8140-25-S01	Horizontal	25	1	0.71	0.49	3	0.27
RV8140-25-S03	Horizontal	25	3	0.99	0.69	3.7	0.38
RV8140-25-S11	Horizontal	25	11	0.48	0.33	2.7	0.19
RV8140-25-S13	Horizontal	25	13	0.69	0.48	3.3	0.27
RV8140-32-S01	Horizontal	32	1	0.49	0.34	2.1	0.27
RV8140-32-S03	Horizontal	32	3	0.69	0.48	2.7	0.38
RV8140-32-S11	Horizontal	32	11	0.30	0.21	1.8	0.19
RV8140-32-S13	Horizontal	32	13	0.44	0.31	2.2	0.28
RV8140-40-S01	Horizontal	40	1	0.31	0.22	1.3	0.28
RV8140-40-S03	Horizontal	40	3	0.44	0.31	1.5	0.39
RV8140-40-S11	Horizontal	40	11	0.17	0.12	1.1	0.19
RV8140-40-S13	Horizontal	40	13	0.25	0.17	1.3	0.27
RV8140-50-S01	Horizontal	50	1	0.18	0.12	0.9	0.26
RV8140-50-S03	Horizontal	50	3	0.25	0.17	1.1	0.37
RV8140-50-S11	Horizontal	50	11	0.08	0.05	0.7	0.18
RV8140-50-S13	Horizontal	50	13	0.11	0.08	0.9	0.26
RV8540-16-S02	Vertical	16	2	1.25	0.88	6.9	0.27
RV8540-16-S06	Vertical	16	6	0.63	0.44	5.3	0.16
RV8540-16-S12	Vertical	16	12	0.93	0.65	6.9	0.20
RV8540-16-S16	Vertical	16	16	0.47	0.33	5.6	0.12
RV8540-25-S02	Vertical	25	2	0.71	0.49	3.2	0.29
RV8540-25-S06	Vertical	25	6	0.35	0.25	2.6	0.18
RV8540-25-S12	Vertical	25	12	0.48	0.33	3	0.21
RV8540-25-S16	Vertical	25	16	0.24	0.17	2.4	0.13
RV8540-32-S02	Vertical	32	2	0.49	0.34	2.3	0.29
RV8540-32-S06	Vertical	32	6	0.25	0.17	1.8	0.18
RV8540-32-S12	Vertical	32	12	0.30	0.21	2.1	0.21
RV8540-32-S16	Vertical	32	16	0.15	0.11	1.7	0.13
RV8540-40-S02	Vertical	40	2	0.31	0.22	1.4	0.30
RV8540-40-S06	Vertical	40	6	0.16	0.11	1.2	0.19
RV8540-40-S12	Vertical	40	12	0.17	0.12	1.3	0.21
RV8540-40-S16	Vertical	40	16	0.09	0.06	1.1	0.13
RV8540-50-S02	Vertical	50	2	0.18	0.12	1	0.28
RV8540-50-S06	Vertical	50	6	0.09	0.06	0.9	0.18
RV8540-50-S12	Vertical	50	12	0.08	0.05	0.9	0.20
RV8540-50-S16	Vertical	50	16	0.04	0.03	0.8	0.13

* **2-line applications:**
Series connection: Connect 2-3 and 6-7. => Inductance values multiply by 4, resistance doubles.
Parallel connection: Connect 1-3, 2-4, 5-7 and 6-8. => Inductance values remain the same, resistance halves.
See mechanical drawing for pin-out guidance.

Inductance test conditions: 10 kHz / 50 mV; 100 kHz / 1 V; tolerances +50%, -30%

Product selector

RV8t4x-yy-Szz

zz: Frame Size

01: Frame size standard	ø 66 x 41 mm, horizontal
02: Frame size standard	64 x 42 x 66 mm, vertical
03: Frame size standard plus	ø 66 x 53 mm, horizontal
06: Frame size standard thin	64 x 30 x 66 mm, vertical
11: Frame size small	ø 62 x 37 mm, horizontal
12: Frame size small	60 x 38x 60 mm, vertical
13: Frame size small plus	ø 62 x 47 mm, horizontal
16: Frame size small thin	60 x 27 x 60 mm, vertical

yy: Current
16 A to 50 A

x: Core material
0: Ferrite core
1: Nanocrystalline core

t: Orientation
1: Horizontal
5: Vertical

Distribution Inventory

Up-to-date inventory levels for global distributors is available at

https://products.schaffner.com/stock

Thermal Derating

If higher ambient temperatures than the specified 60°C apply, the nominal current needs to be reduced according to the graph below.

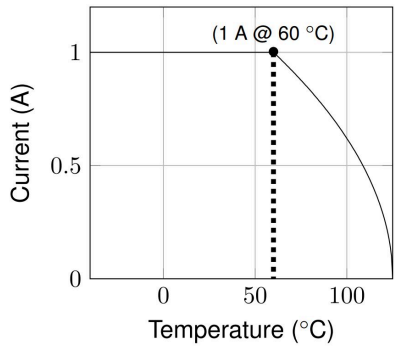

Normalized current value

$$I = I_N \cdot \sqrt{\frac{\Theta_{max} - \Theta_{act}}{\Theta_{max} - \Theta_N}}$$

for $\Theta_{act} > \Theta_N$ and $\Theta_{act} < \Theta_{max}$

I_N	rated current at Θ_N
Θ_{act}	actual ambient temperature
Θ_N	temperature at which the rated current is defined
Θ_{max}	rated maximum temperature of the component

Typical Choke Attenuation / Resonance Frequency Characteristics

Per CISPR 17: symmetrical 50 Ω/50 Ω -> Differential Mode (DM); asymmetrical 50 Ω/50 Ω -> Common Mode (CM)
4-line or parallel connection

16 A

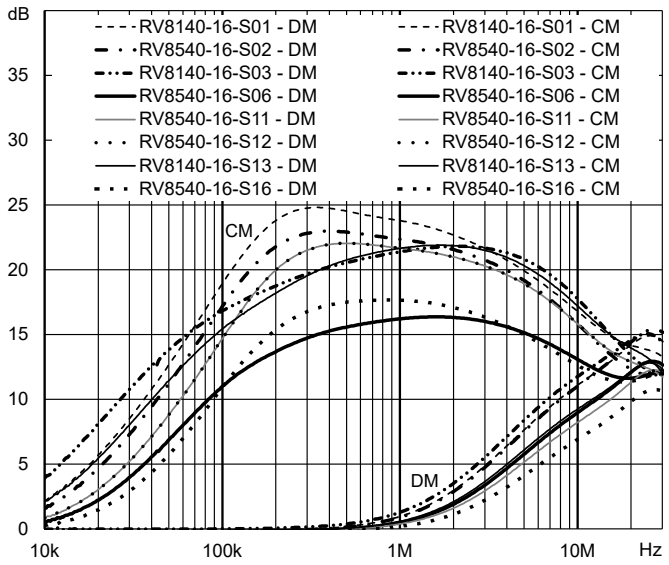

25 A

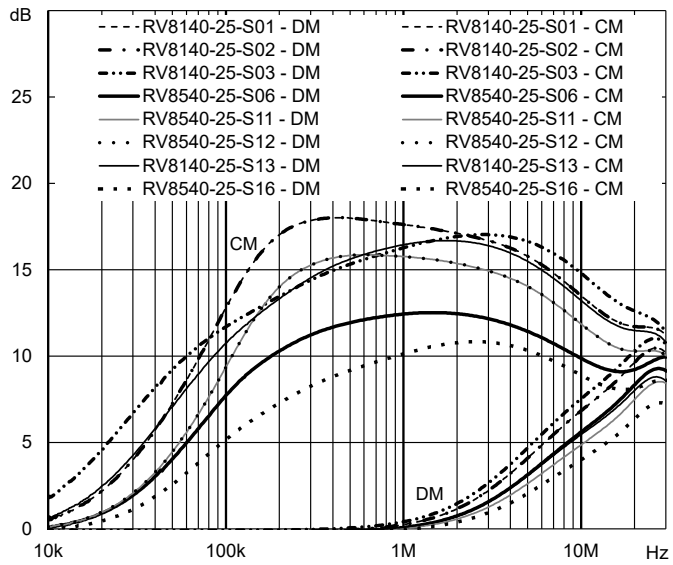

32 A

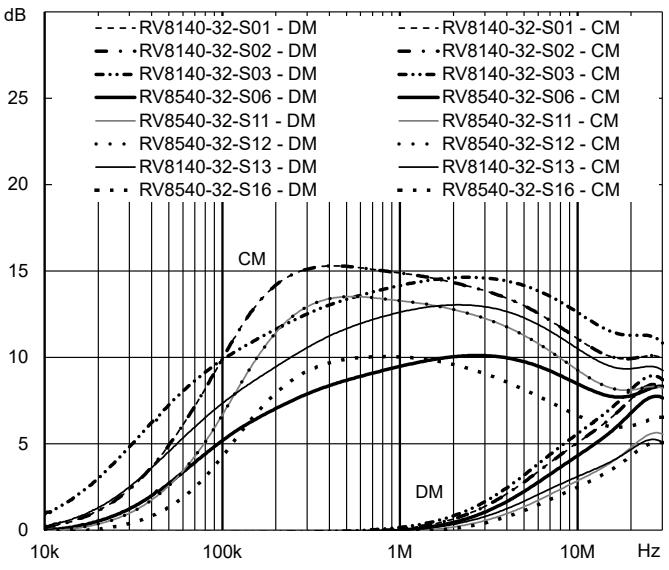

40 A

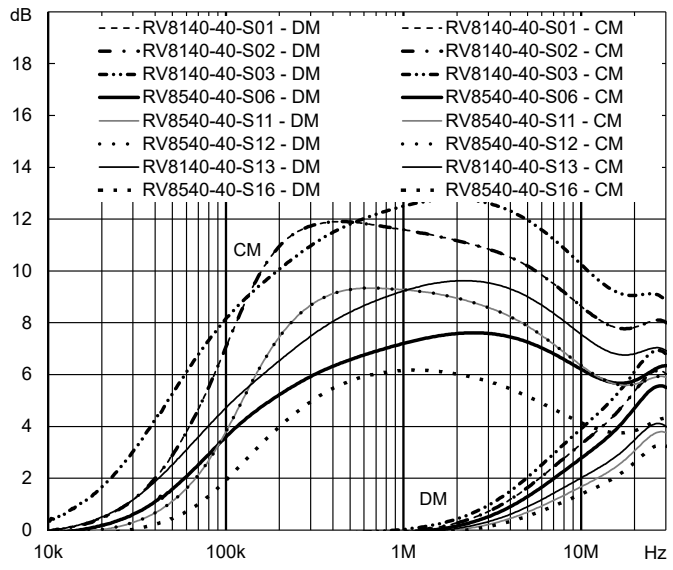

50 A

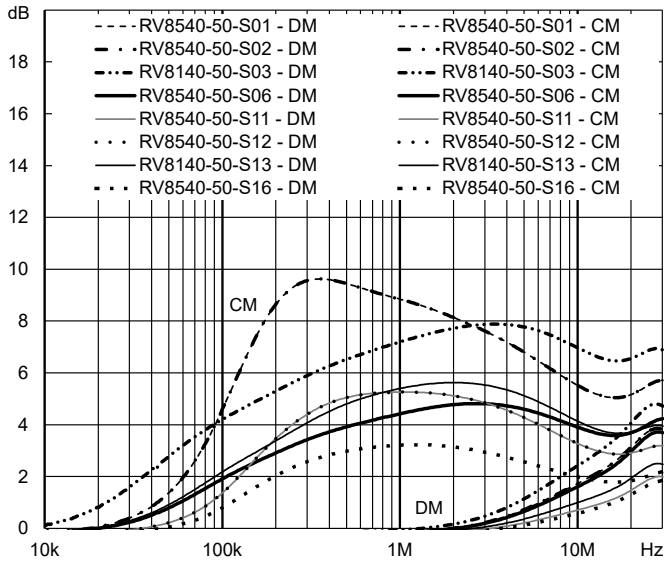

Typical Choke Attenuation / Resonance Frequency Characteristics - 2-Line Application)

Per CISPR 17: symmetrical 50 Ω/50 Ω -> Differential Mode (DM); asymmetrical 50 Ω/50 Ω -> Common Mode (CM)
For 2-line / series connection

16 A (2-line application)

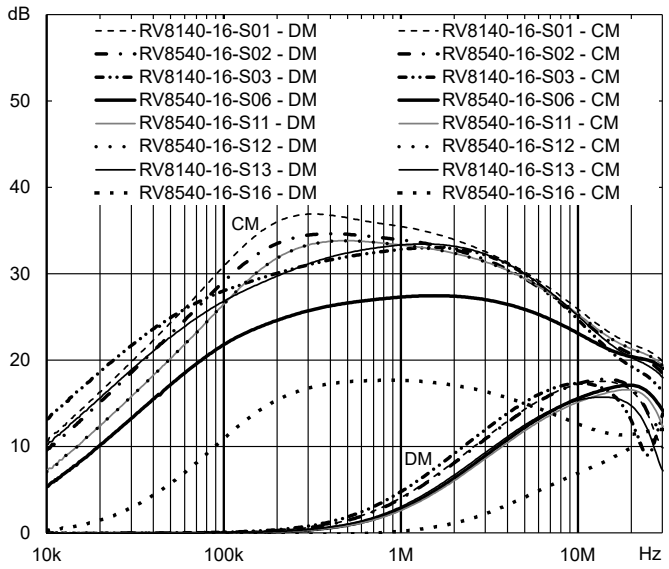

25 A (2-line application)

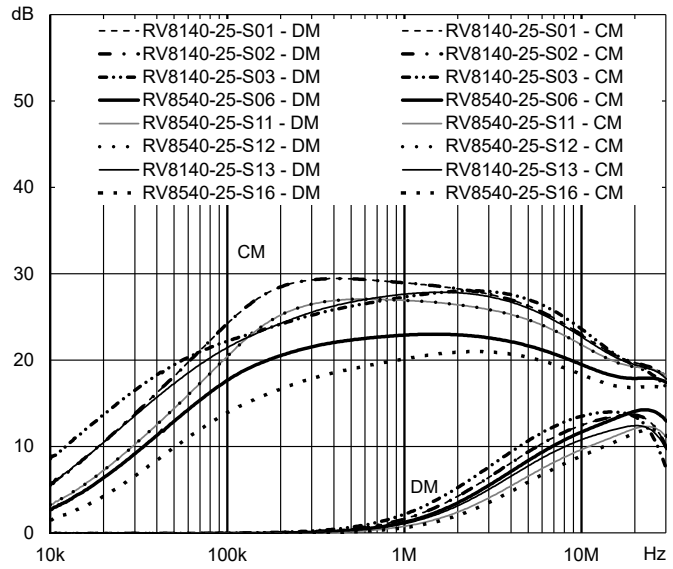

32 A (2-line application)

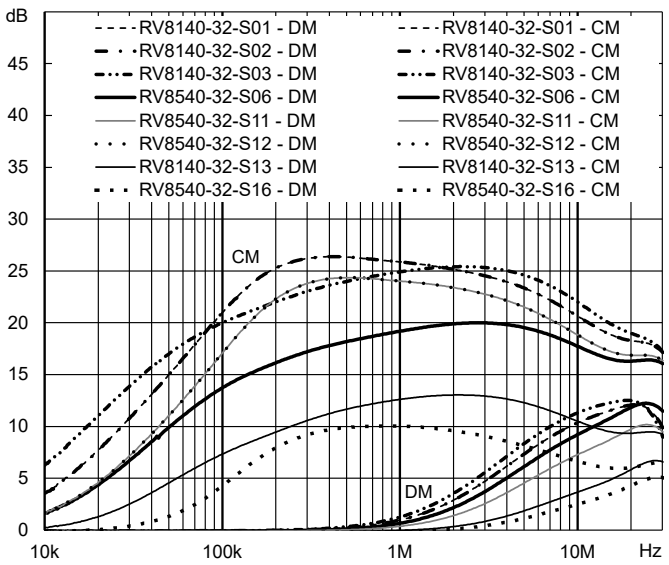

40 A (2-line application)

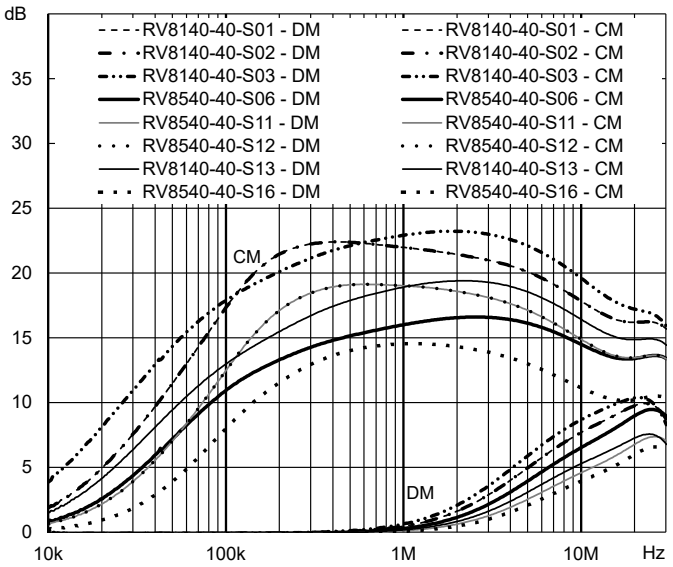

50 A (2-line application)

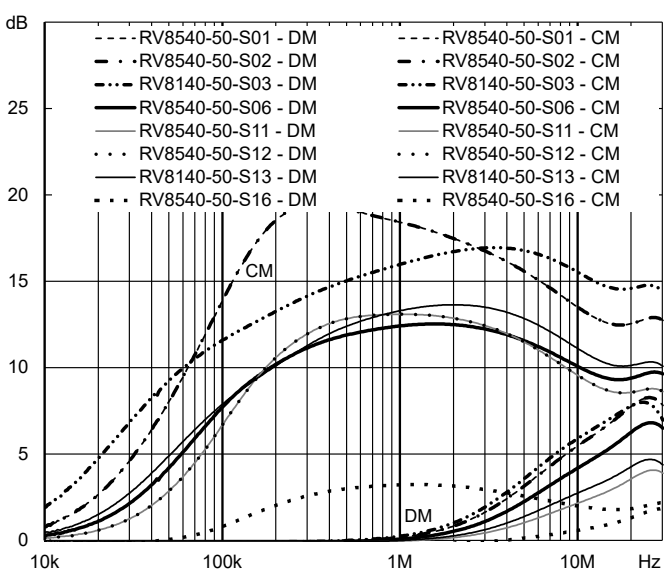

Mechanical Data

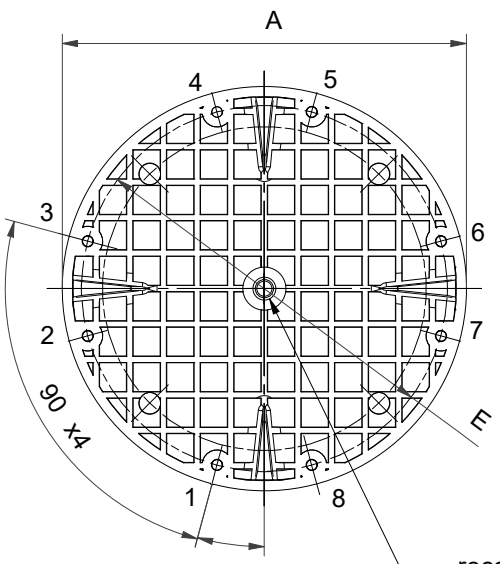

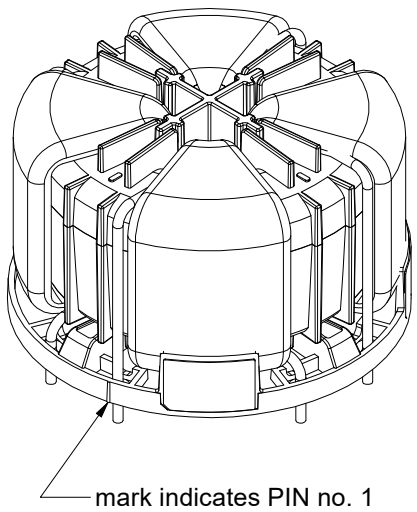

recommendad screw for fixation:
WN 1452 K35 x 8
tightening torque 1.0 Nm

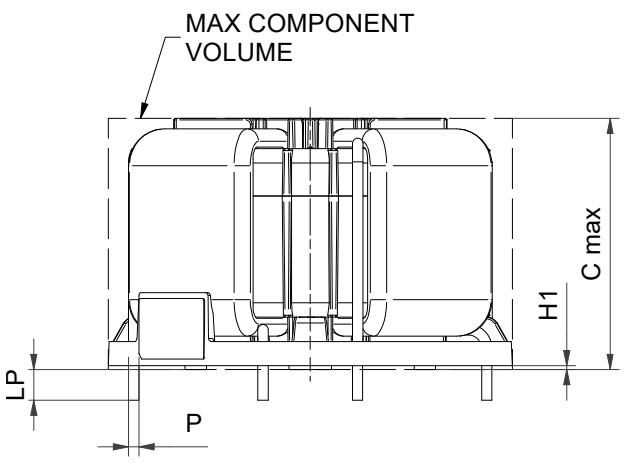

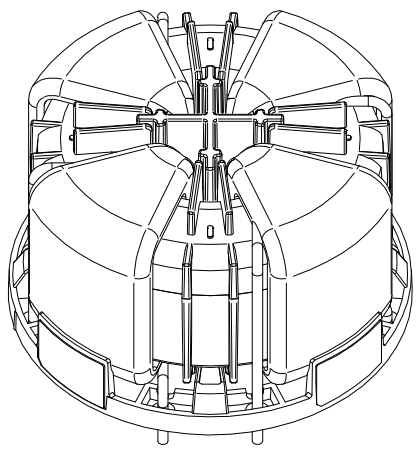

	Ø A ±0.2	Cmax	H1 ±0.1	Ø E ±0.2	α ±1°	LP ±0.5	Ø P (16A) ±0.1	Ø P (25A) ±0.1	Ø P (32A) ±0.1	Ø P (40A) ±0.1	Ø P (50A) ±0.1
RV8140/RV8141-XX-S01	66.1	41.1	0.6	59.8	15°	5	1.7	2.2	2.2	2.8	2.8
RV8140/RV8141-XX-S03	66.1	53.2	0.6	59.8	15°	5	1.7	2.2	2.2	2.8	2.8
RV8140/RV8141-XX-S11	62.1	37.1	0.6	55.4	15°	5	1.5	2.0	2.0	2.5	2.5
RV8140/RV8141-XX-S13	62.1	47.1	0.6	55.4	15°	5	1.5	2.0	2.0	2.5	2.5

Mechanical Data

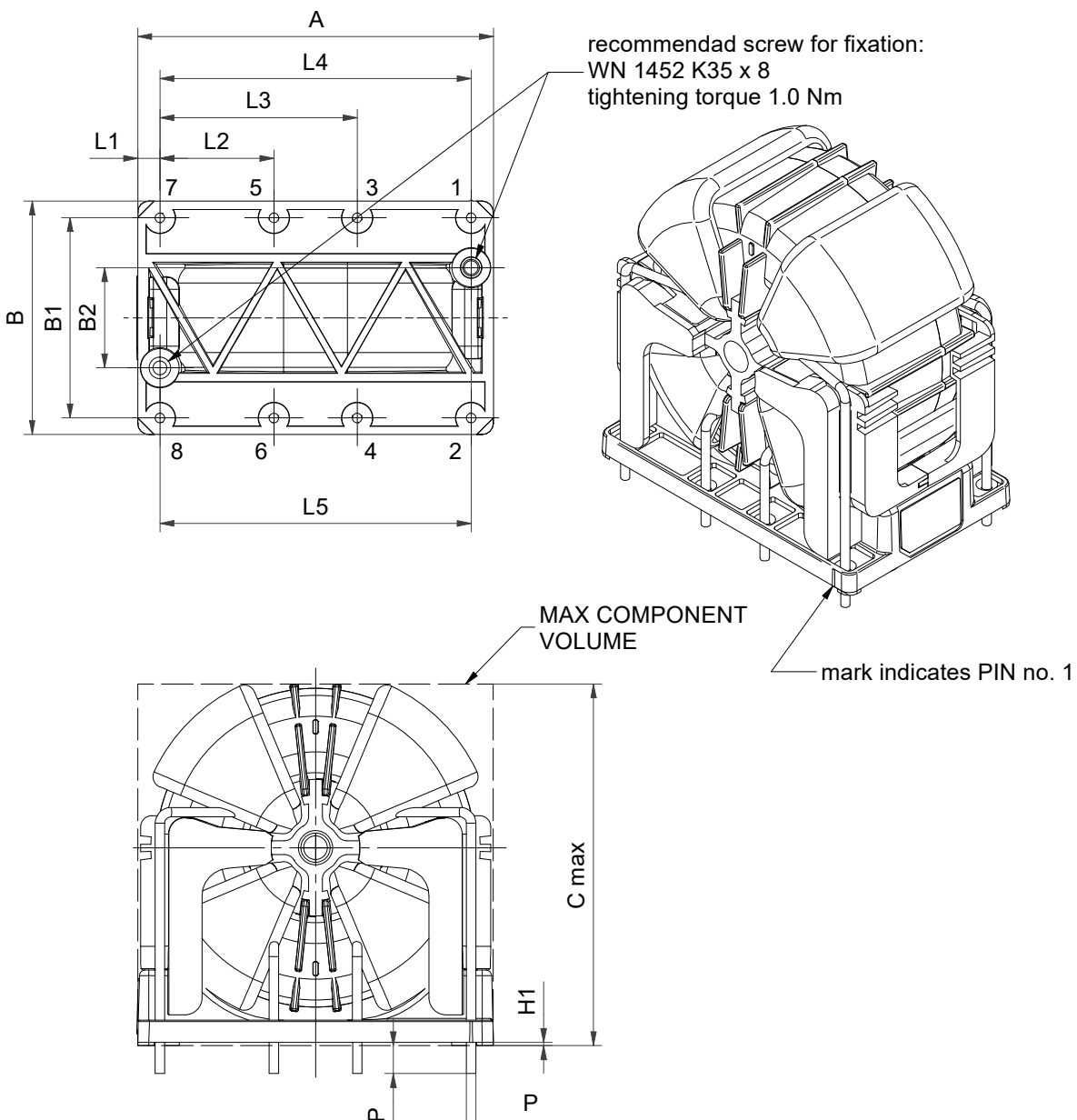

	Cmax	H1	B	B1	B2	A	L1	L2	L3	L4	L5	LP	Ø P (16A)	Ø P (25A)	Ø P (32A)	Ø P (40A)	Ø P (50A)
		±0.1	±0.2	±0.4	±0.2	±0.2	±0.1	±0.4	±0.4	±0.4	±0.4	±0.5	±0.1	±0.1	±0.1	±0.1	±0.1
RV8540/RV8541-XX-S02	65.5	0.6	42	36	18	64	4	20.5	35.5	56	56	5	1.7	2.2	2.2	2.8	2.8
RV8540/RV8541-XX-S06	65.5	0.6	30	24	0	64	4	20.5	35.5	56	46	5	1.7	2.2	2.2	2.8	2.8
RV8540/RV8541-XX-S12	59.7	0.6	38	32	12	60	4	18.5	33.5	52	46	5	1.5	2.0	2.0	2.5	2.5
RV8540/RV8541-XX-S16	59.7	0.6	27	21	0	60	4	18.5	33.5	52	42	5	1.5	2.0	2.0	2.5	2.5

Headquarters, Global Innovation and Development

Switzerland
Schaffner Group
Industrie Nord
Nordstrasse 11e
4542
Luterbach
+41 32 681 66 26
info@schaffner.com

To find your local partner within Schaffner's global network schaffner.com

© 2023 Schaffner Group

The content of this document has been carefully checked and understood. However, neither Schaffner nor its subsidiaries assume any liability whatsoever for any errors or inaccuracies of this document and the consequences thereof. Published specifica-tionsw are subject to change without notice. Product suitability for any area of application must ultimately be determined by the customer. In all cases, products must never be operated outside their published specifications. Schaffner does not guarantee the availability of all published products. This disclaimer shall be governed by substantive Swiss law and resulting disputes shall be settled by the courts at the place of business of Schaffner Holding AG. Latest publications and a complete disclaimer can be downloa-ded from the Schaffner website. All trademarks recognized.

Sales and Application Centers

Finland
Schaffner Oy
Lohjanharjuntie 1109
8500
Lohja
+358 50 468 7284
finlandsales@schaffner.com

France
Schaffner EMC S.A.S.
16-20 Rue Louis Rameau
95875
Bezons
+33 1 34 34 30 60
francesales@schaffner.com

Germany
Schaffner Deutschland GmbH
Ohiostr. 8
76149
Karlsruhe
+49 721 56910
germanysales@schaffner.com

India
Schaffner India Pvt. Ltd (Registered & Sales office)
Regus World Trade Centre
WTC 22nd Floor Unit No 2238 Brigade
Gateway Campus 26/1 Dr. Rajkumar Road
Malleshwaram (W)
560055
Bangalore
+91 8067935355
indiasales@schaffner.com

United Kingdom
Schaffner Ltd.
Suite 1 Oakmede Place
Terrace Road
RG42 4JF
Binfield
+44 118 9770070
uksales@schaffner.com

United States
Schaffner EMC Inc.
52 Mayfield Avenue
Edison, New Jersey
+1 732 225 9533
usasales@schaffner.com

Sweden
Schaffner EMC AB
Östermalmstrorg 1
114 42
Stockholm
+46 8 5050 2425
swedensales@schaffner.com

Switzerland
Schaffner EMV AG
Industrie Nord
Nordstrasse 11e
4542
Luterbach
+41 32 681 66 26
switzerlandsales@schaffner.com

Taiwan
Schaffner EMV Ltd.
U-Town
20 Floor-2 No 97 Section 1 XinTai 5th Road
XiZhi District
22175
New Taipei City
+886 226975500
taiwansales@schaffner.com

Italy
Schaffner EMC S.r.l.
Via Ticino, 30
20900
Monza (MB)
+39 039 21 41 070
italysales@schaffner.com

Japan
Schaffner EMC K.K.
ISM Sangenjaya
7F 1-32-12 Kamiuma Setagaya-ku
154-0011
Tokyo
+81 3 5712 3650
japansales@schaffner.com

Singapore
Schaffner EMC Pte Ltd.
Blk 3015A Ubi Road 1 #05-09 Kampong Ubi Industrial Estate
408705
Singapore
+65 63773283
singaporesales@schaffner.com