Flat suction cup (round)

SUF 12 NBR-ESD-55 M5-IG

Part no..:10.01.01.14163

https://www.schmalz.com/10.01.01.14163

Home > Vacuum Technology for Automation > Vacuum Components > Vacuum Suction Cups > Flat Suction Cups (Round) > Flat Suction Cups SUF > SUF 12 NBR-ESD-55 M5-IG

Flat suction cup (round) for process safe handling of smooth or slightly rough surfaces



- Size: 12
- Suction cup material: Nitrile rubber NBR-ESD
- Material hardness [Shore A]: 55 Shore A
- Vacuum connection: M5-F

Design Data

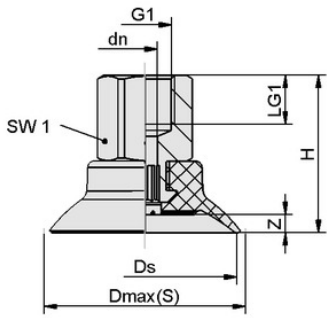

Attribute	Value
Dmax(S)	13.20 mm
Ds	12 mm
dn	3.10 mm
G1	M5-F
H	18.60 mm
LG1	5.50 mm
SW1	8 mm
Z (Stroke)	1.20 mm

Technical Data

Attribute	Value
Suction force	5 N
Pull-off force	5 N
Volume	0.12 cm³
Curve radius (min) (convex)	12.50 mm
Hose diameter (rec.) d	2 mm
Size	12
Suction cup material	Nitrile rubber NBR-ESD
Material hardness [Shore A]	55 Shore A

Contact Schmalz
Schmalz Inc. | 5850 Oak Forest Drive, Raleigh, NC 27616, United States | +1 (919) 713-0880 |
schmalz.us@schmalz.com

Flat suction cup (round)

SUF 12 NBR-ESD-55 M5-IG

Part no..:10.01.01.14163

https://www.schmalz.com/10.01.01.14163

Weight	1.90 g
Product family	SUF
Number of folds	0

Note: Suction force: The specified suction forces are theoretical values at a vacuum of -0.6 bar and with a dry, smooth and flat workpiece surface - they do not include a safety factor Hose diameter: The recommended hose diameter refers to a hose length of approx. 2 m

Spare parts

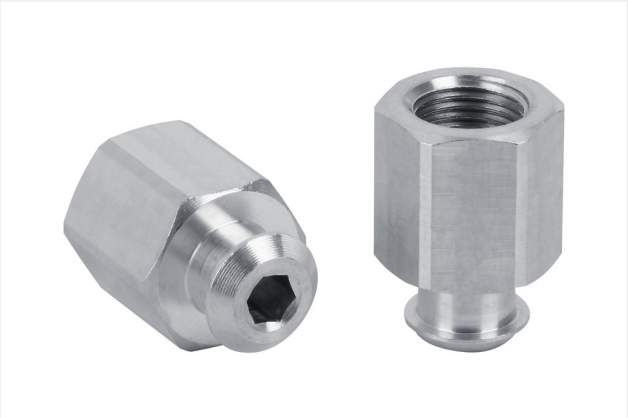

SC 030 M5-IG

Part no..:10.01.06.03440

Connection geometry: 030
Connection: M5-F
Length L1: 15.8 mm
Fitting length: 10 mm
Nominal diameter dn: 3.1 mm



SUF 12 NBR-ESD-55 SC030

Part no..:10.01.01.14030

Size: 12
Suction cup material: Nitrile rubber NBR-ESD
Material hardness [Shore A]: 55 Shore A