Product data sheet
Characteristics

276XAXH-5D
Power Relay, General Purpose Relays, SPDT, epoxy sealed, pins for printed circuit board, 7A, 5V DC, 1NC + 1NO

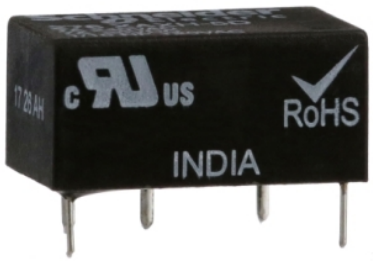

Main

Product Type	Power relay
Switch Function	SPDT
Contact Composition	1 NC + 1 NO

Complementary

Input Current	7 A
Contacts Material	Silver alloy contacts
Minimum Switching Current	100 mA
Coil Resistance	125 Ohm
Input voltage	5 V DC
Drop-out Voltage Threshold	>= 0.1 Uc DC
Rated Operational Current	7 A at 240 V AC 7 A at 30 V DC
Power consumption in W	0.2 W DC
Voltage Range	0.8...1.1 Un DC
Motor Power HP	0.10 hp 120 V AC
Connections Terminals	Pins for printed circuit board
Protective Treatment	Epoxy sealed
Electrical Insulation Class	Class E
Mounting	Printed circuit boards
Height	0.4 in (10 mm)
Width	0.5 in (12.7 mm)
Depth	0.81 in (20.49 mm)
Product Weight	0.2 oz (5.5 g)
Operating Time	10 ms

Environment

Ambient Air Temperature for Operation	-40…158 °F (-40…70 °C)
Ambient Air Temperature for Storage	-40…185 °F (-40…85 °C)
Product Certifications	UL
Electrical Durability	100000 cycles
Mechanical Durability	5000000 cycles
Dielectric Strength	2000 V AC between coil and contact 1000 V AC between contacts
Shock Resistance	20 gn in operation
Vibration Resistance	1.5 gn 10…55 Hz)in operation

The information provided in this documentation contains general descriptions and/or technical characteristics of the performance of the products contained herein.
This documentation is not intended as a substitute for and is not to be used for determining suitability or reliability of these products for specific user applications.
It is the duty of any such user or integrator to perform the appropriate and complete risk analysis, evaluation and testing of the products with respect to the relevant specific application or use thereof.
Neither Schneider Electric Industries SAS nor any of its affiliates or subsidiaries shall be responsible or liable for misuse of the information contained herein.

Ordering and shipping details

Category	US10CP221127
Discount Schedule	0CP2
GTIN	3606480276224
Returnability	Yes
Country of origin	TW

Packing Units

Unit Type of Package 1	PCE
Number of Units in Package 1	1
Package 1 Height	0.807 in (2.049 cm)
Package 1 Width	0.50 in (1.27 cm)
Package 1 Length	0.53 in (1.35 cm)
Package 1 Weight	0.2 oz (5.5 g)

Offer Sustainability

California proposition 65	WARNING: This product can expose you to chemicals including: Nickel compounds, which is known to the State of California to cause cancer, and Di-isodecyl phthalate (DIDP), which is known to the State of California to cause birth defects or other reproductive harm. For more information go to www.P65Warnings.ca.gov
REACh Regulation	REACh Declaration
REACh free of SVHC	Yes
EU RoHS Directive	Pro-active compliance (Product out of EU RoHS legal scope) EU RoHS Declaration
Toxic heavy metal free	Yes
Mercury free	Yes
China RoHS Regulation	China RoHS Declaration
RoHS exemption information	Yes
WEEE	The product must be disposed on European Union markets following specific waste collection and never end up in rubbish bins.

Connections and Wiring Diagrams

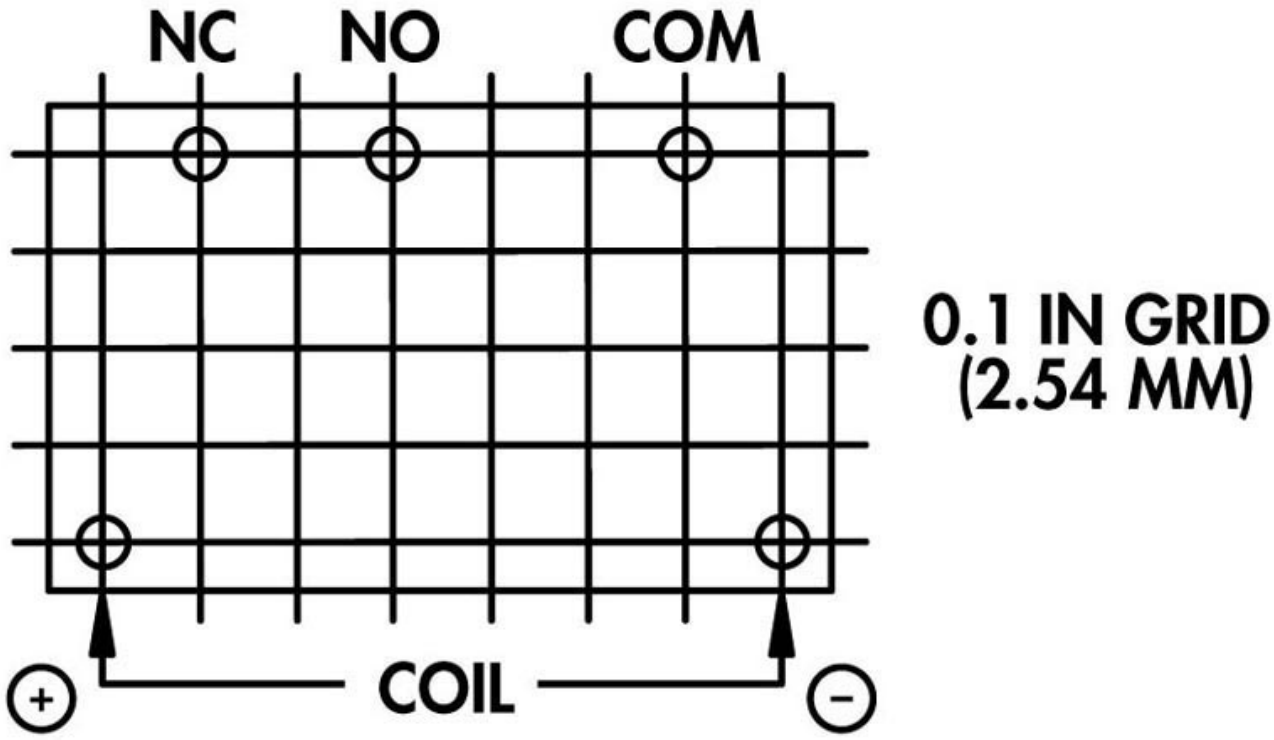

Connections and Wiring Diagrams

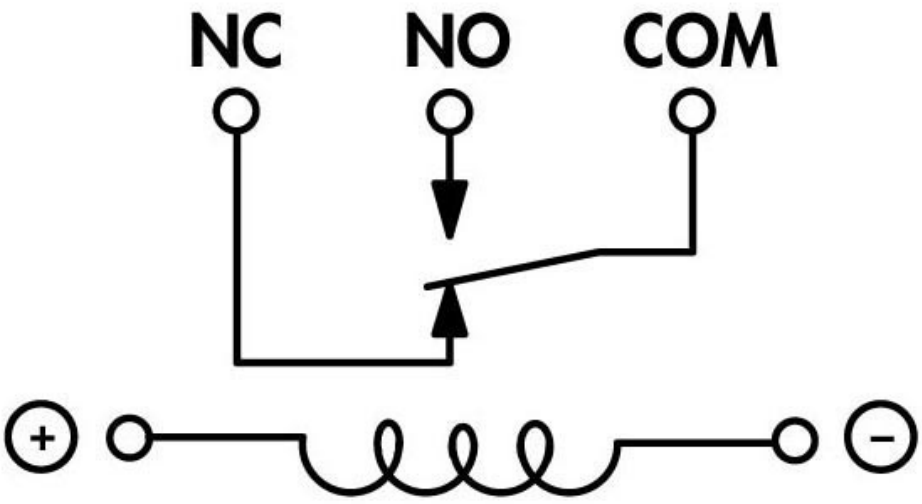

SPDT
276XAX