Product data sheet
Characteristics

ATV630D55Y6
Variable speed drive, Altivar Process ATV600, ATV630, 55kW/75 hp, 500V/690 V, IP00

The information provided in this documentation contains general descriptions and/or technical characteristics of the performance of the products contained herein.
This documentation is not intended as a substitute for and is not to be used for determining suitability or reliability of these products for specific user applications.
It is the duty of any such user or integrator to perform the appropriate and complete risk analysis, evaluation and testing of the products with respect to the relevant specific application or use thereof.
Neither Schneider Electric Industries SAS nor any of its affiliates or subsidiaries shall be responsible or liable for misuse of the information contained herein.



Main

Range of Product	Altivar Process ATV600
Product or Component Type	Variable speed drive
Product Specific Application	Process and utilities
Device short name	ATV630
Variant	Standard version
Product destination	Asynchronous motors Synchronous motors
EMC filter	Integrated 82.02 ft (25 m) EN/IEC 61800-3 category C3
IP degree of protection	IP00IEC 61800-5-1 IP00IEC 60529 IP20 with kit VW3A9706)IEC 61800-5-1 IP20 with kit VW3A9706)IEC 60529
[Us] rated supply voltage	500...690 V
Type of cooling	Forced convection
Supply frequency	50...60 Hz - 5...5 %
[Us] rated supply voltage	500...690 V - 15...10 %
Motor power kW	45 KW 500 V normal duty) 37 KW 500 V heavy duty) 55 KW 690 V normal duty) 45 kW 690 V heavy duty)
Maximum Horse Power Rating	60 Hp 500 V normal duty 50 Hp 500 V heavy duty 75 Hp 690 V normal duty 60 hp 690 V heavy duty
Line current	65.5 A 500 V normal duty) 62.5 A 690 V normal duty) 55.6 A 500 V heavy duty) 54.4 A 690 V heavy duty)
Prospective line Isc	70 kA
Apparent power	74.7 KVA 690 V normal duty) 65 kVA 690 V heavy duty)
Continuous output current	66 A 2.5 kHz normal duty 55 A 2.5 kHz heavy duty
Maximum transient current	72.6 A 60 s normal duty) 82.5 A 60 s heavy duty)
Asynchronous motor control profile	Variable torque standard Optimized torque mode Constant torque standard
Synchronous motor control profile	Permanent magnet motor Synchronous reluctance motor
Speed drive output frequency	0.1…500 Hz
Nominal switching frequency	2.5 kHz
Switching frequency	1...4.9 kHz adjustable 2.5...4.9 kHz with derating factor
Safety function	STO (safe torque off) SIL 3
Discrete input logic	16 preset speeds

Communication port protocol	Ethernet Modbus serial Modbus TCP
Option card	Slot A communication module, Profibus DP V1 Slot A communication module, PROFINET Slot A communication module, DeviceNet Slot A communication module, Modbus TCP/ EtherNet/IP Slot A communication module, CANopen daisy chain RJ45 Slot A communication module, CANopen SUB-D 9 Slot A communication module, CANopen screw terminals Slot A/slot B digital and analog I/O extension module Slot A/slot B output relay extension module Slot A communication module, Ethernet IP/Modbus TCP/MD-Link Communication module, BACnet MS/TP Communication module, Ethernet Powerlink

Complementary

Mounting Mode	Wall mount
Phase	3 phase
Discrete output number	0
Discrete output type	Relay outputs R1A, R1B, R1C 250 V AC 3000 mA Relay outputs R1A, R1B, R1C 30 V DC 3000 mA Relay outputs R2A, R2C 250 V AC 5000 mA Relay outputs R2A, R2C 30 V DC 5000 mA Relay outputs R3A, R3C 250 V AC 5000 mA Relay outputs R3A, R3C 30 V DC 5000 mA
Output voltage	<= power supply voltage
Permissible temporary current boost	1.1 x In 60 s normal duty) 1.5 x In 60 s heavy duty)
Motor slip compensation	Adjustable Automatic whatever the load Not available in permanent magnet motor law Can be suppressed
Acceleration and deceleration ramps	Linear adjustable separately from 0.01...9999 s S, U or customized
Physical interface	Ethernet 2-wire RS 485
Braking to standstill	By DC injection
Protection type	Thermal protection motor Safe torque off motor Motor phase break motor Thermal protection drive Safe torque off drive Overheating drive Overcurrent between output phases and earth drive Overload of output voltage drive Short-circuit protection drive Motor phase break drive Overvoltages on the DC bus drive Line supply overvoltage drive Line supply undervoltage drive Line supply phase loss drive Overspeed drive Break on the control circuit drive
Transmission Rate	10, 100 Mbits 4800 bps, 9600 bps, 19200 bps, 38.4 Kbps
Frequency resolution	Display unit 0.1 Hz Analog input 0.012/50 Hz
Transmission frame	RTU
Electrical connection	Control removable screw terminals 0.5...1.5 mm² AWG 20...AWG 16 Line side screw terminal 25...50 mm² AWG 4...AWG 1 Motor screw terminal 25...50 mm² AWG 4...AWG 1
Connector type	RJ45 on the remote graphic terminal)Ethernet/Modbus TCP RJ45 on the remote graphic terminal)Modbus serial
Data format	8 bits, configurable odd, even or no parity
Type of polarization	No impedance

Exchange mode	Half duplex, full duplex, autonegotiation Ethernet/Modbus TCP
Number of addresses	1…247 Modbus serial
Method of access	Slave Modbus TCP
Supply	External supply for digital inputs 24 V DC 19…30 V), <1.25 mA overload and short-circuit protection Internal supply for reference potentiometer (1 to 10 kOhm) 10.5 V DC +/- 5 %, <10 mA overload and short-circuit protection Internal supply for digital inputs and STO 24 V DC 21…27 V), <200 mA overload and short-circuit protection
Local signalling	For local diagnostic 3 LEDs For embedded communication status 3 LEDs (dual colour) For communication module status 4 LEDs (dual colour) For presence of voltage 1 LED (red)
Width	13.03 in (331 mm)
Height	24.80 in (630 mm)
Depth	11.69 in (297 mm)
Net Weight	116.85 lb(US) (53 kg)
Analogue input number	3
Analogue input type	AI1, AI2, AI3 software-configurable voltage 0...10 V DC 31.5 kOhm 12 bits AI1, AI2, AI3 software-configurable current 0...20 mA 250 Ohm 12 bits AI2 voltage analog input - 10...10 V DC 31.5 kOhm 12 bits
Discrete input number	8
Discrete input type	DI7, DI8 programmable as pulse input 0…30 kHz, 24 V DC <= 30 V)
Input compatibility	DI1...DI6 discrete input level 1 PLC EN/IEC 61131-2 DI5, DI6 discrete input level 1 PLC IEC 65A-68 STOA, STOB discrete input level 1 PLC EN/IEC 61131-2
Discrete input logic	Positive logic (source) DI1...DI8), < 5 V, > 11 V Negative logic (sink) DI1...DI8), > 16 V, < 10 V
Analogue output number	2
Analogue output type	Software-configurable voltage AQ1, AQ2 0...10 V DC 470 Ohm 10 bits Software-configurable current AQ1, AQ2 0...20 mA 10 bits Software-configurable current DQ-, DQ+ 30 V DC Software-configurable current DQ-, DQ+ 100 mA
Sampling duration	2 Ms +/- 0.5 ms DI1...DI4) - discrete input 5 Ms +/- 1 ms DI5, DI6) - discrete input 5 Ms +/- 0.1 ms AI1, AI2, AI3) - analog input 10 ms +/- 1 ms AO1) - analog output
Accuracy	+/- 0.6 % AI1, AI2, AI3 for a temperature variation 60 °C analog input +/- 1 % AO1, AO2 for a temperature variation 60 °C analog output
Linearity error	AI1, AI2, AI3 +/- 0.15 % of maximum value analog input AO1, AO2 +/- 0.2 % analog output
Relay output number	3
Relay output type	Configurable relay logic R1 fault relay NO/NC 100000 cycles Configurable relay logic R2 sequence relay NO 100000 cycles Configurable relay logic R3 sequence relay NO 100000 cycles
Refresh time	Relay output R1, R2, R3)5 ms +/- 0.5 ms)
Minimum switching current	Relay output R1, R2, R3 5 mA 24 V DC
Maximum switching current	Relay output R1, R2, R3 resistive, cos phi = 1 3 A 250 V AC Relay output R1, R2, R3 resistive, cos phi = 1 3 A 30 V DC Relay output R1, R2, R3 inductive, cos phi = 0.4 7 ms 2 A 250 V AC Relay output R1, R2, R3 inductive, cos phi = 0.4 7 ms 2 A 30 V DC
Isolation	Between power and control terminals
Maximum output frequency	500 kHz
Maximum Input Current per Phase	65.5 A
Quantity per Set	1
Enclosure mounting	Wall mounted

Environment

Insulation resistance	> 1 MOhm 500 V DC for 1 minute to earth
Noise level	52 dB 86/188/EEC
Power dissipation in W	Natural convection 227 W 500 V 2.5 kHz Forced convection 858 W 500 V 2.5 kHz
Volume of cooling air	107255.77 Gal/hr(US) (406 m3/h)
Operating position	Vertical +/- 10 degree

Maximum THDI	<48 % with external line choke IEC 61000-3-12
Electromagnetic compatibility	Electrostatic discharge immunity test level 3 IEC 61000-4-2 Radiated radio-frequency electromagnetic field immunity test level 3 IEC 61000-4-3 Electrical fast transient/burst immunity test level 4 IEC 61000-4-4 1.2/50 µs - 8/20 µs surge immunity test level 3 IEC 61000-4-5 Conducted radio-frequency immunity test level 3 IEC 61000-4-6
Pollution degree	2 EN/IEC 61800-5-1
Vibration resistance	1.5 mm peak to peak 2…13 Hz)IEC 60068-2-6 1 gn 13…200 Hz)IEC 60068-2-6
Shock resistance	15 gn 11 ms IEC 60068-2-27
Relative humidity	5…95 % without condensation IEC 60068-2-3
Ambient air temperature for operation	5…122 °F (-15…50 °C) without derating) 122…140 °F (50…60 °C) with derating factor)
Ambient Air Temperature for Storage	-40…158 °F (-40…70 °C)
Operating altitude	<= 3280.84 ft (1000 m) without derating 1000...4800 m with current derating 1 % per 100 m
Standards	UL 508C EN/IEC 61800-3 Environment 2 category C3 EN/IEC 61800-3 EN/IEC 61800-5-1 IEC 61000-3-12 IEC 60721-3 IEC 61508 IEC 13849-1
Product Certifications	UL CSA TÜV
Marking	CE
Standards	UL 508C EN/IEC 61800-3 EN/IEC 61800-3 environment 2 category C3 EN/IEC 61800-5-1 IEC 61000-3-12 IEC 60721-3 IEC 61508 IEC 13849-1
Overvoltage category	III
Regulation loop	Adjustable PID regulator
Noise level	56 dB
Pollution degree	2

Ordering and shipping details

Category	22276-ATV930 FRAMES 1 & 2
Discount Schedule	CP4E
GTIN	3606481325211
Nbr. of units in pkg.	1
Package weight(Lbs)	149.91 lb(US) (68.0 kg)
Returnability	Yes
Country of origin	IN

Packing Units

Unit Type of Package 1	PCE
Package 1 Height	22.83 in (58 cm)
Package 1 width	17.32 in (44 cm)
Package 1 Length	43.70 in (111 cm)

Offer Sustainability

Sustainable offer status	Green Premium product
California proposition 65	WARNING: This product can expose you to chemicals including: Lead and lead compounds, which is known to the State of California to cause cancer and birth defects or other reproductive harm. For more information go to www.P65Warnings.ca.gov
REACh Regulation	REACh Declaration
EU RoHS Directive	Pro-active compliance (Product out of EU RoHS legal scope) EU RoHS Declaration
Mercury free	Yes
RoHS exemption information	Yes
China RoHS Regulation	China RoHS Declaration
Environmental Disclosure	Product Environmental Profile
Circularity Profile	End Of Life Information
WEEE	The product must be disposed on European Union markets following specific waste collection and never end up in rubbish bins.
Upgradeability	Upgraded Components Available

Dimensions

Drives without Top Cover

Front View with EMC Plate, Front, Left and Rear Views without EMC Plate

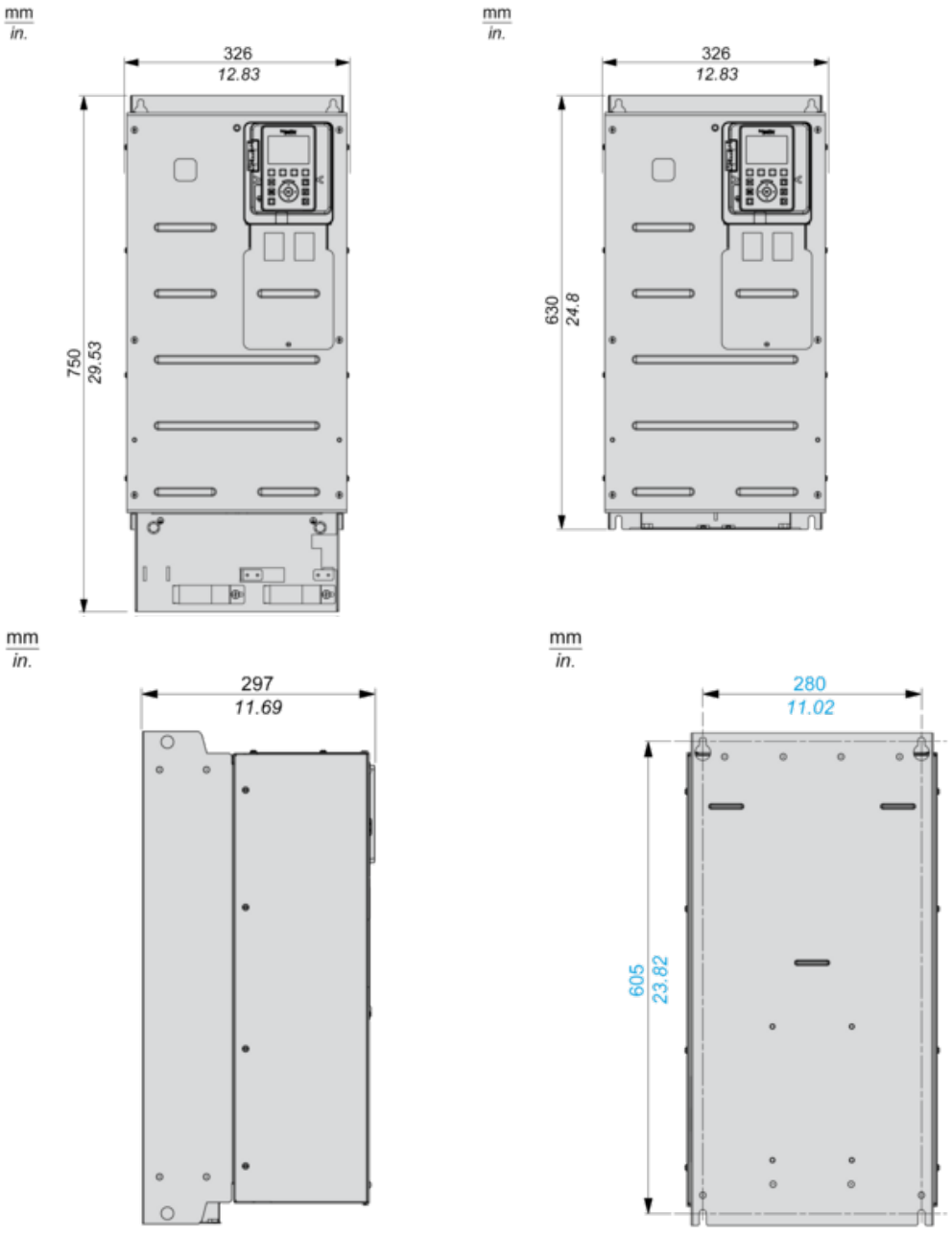

ATV630D55Y6

Clearances

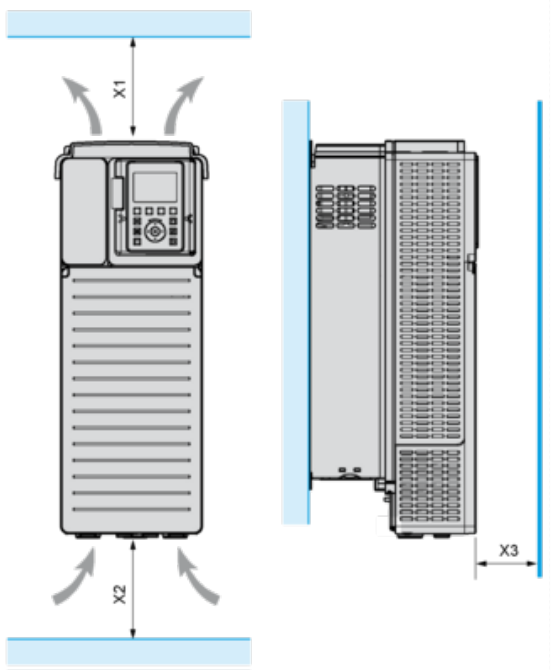

X1	X2	X3
≥ 100 mm (3.94 in.)	≥ 100 mm (3.94 in.)	≥ 10 mm (0.39 in.)

Mounting Types

Mounting Type A: Individual IP21

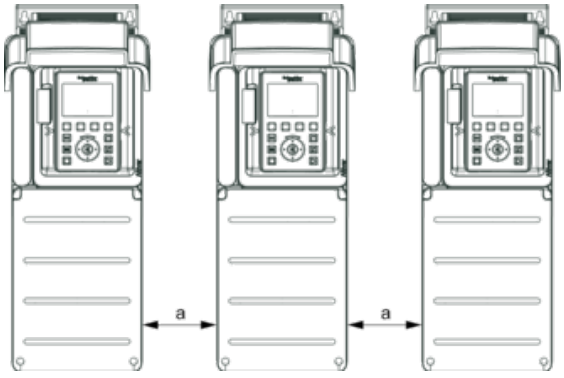

a ≥ 0

Mounting Type B: Side by Side IP20

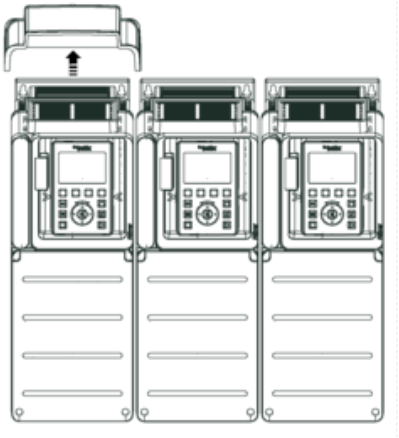

Mounting Type C: Individual IP20

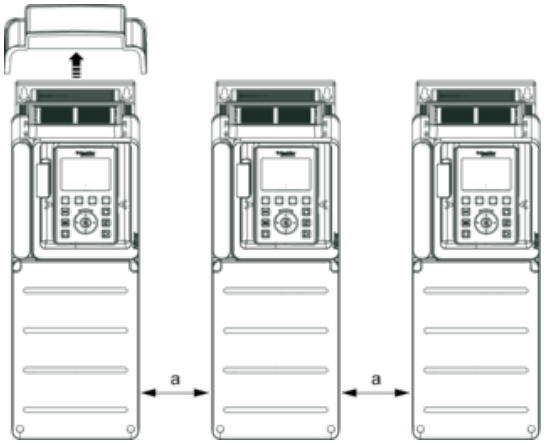

a ≥ 0

Three-Phase Power Supply with Upstream Breaking via Line Contactor

Connection diagrams conforming to standards EN 954-1 category 1 and IEC/EN 61508 capacity SIL1, stopping category 0 in accordance with standard IEC/EN 60204-1

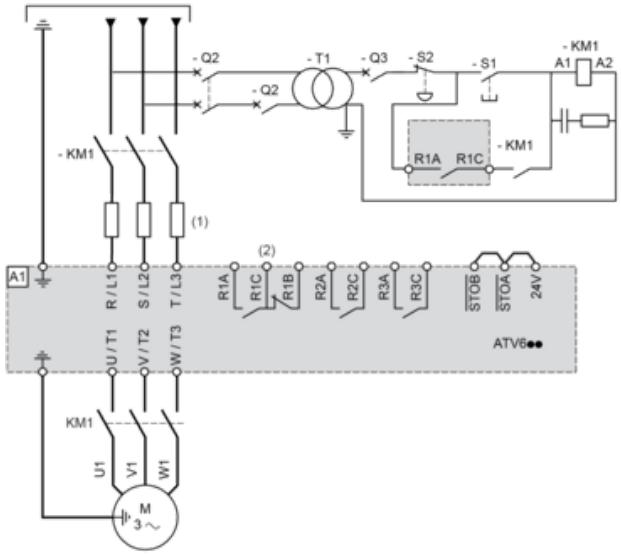

(1) Line choke if used

(2) Use relay R1 set to operating state Fault to switch Off the product once an error is detected.

A1 : Drive

KM1 : Line Contactor

Q2, Q3 : Circuit breakers

S1, S2 : Pushbuttons

T1 : Transformer for control part

Three-Phase Power Supply with Downstream Breaking via Contactor

Connection diagrams conforming to standards EN 954-1 category 1 and IEC/EN 61508 capacity SIL1, stopping category 0 in accordance with standard IEC/EN 60204-1

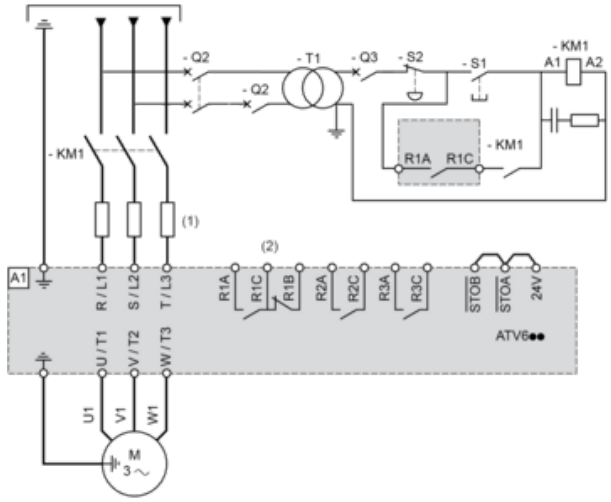

(1) Line choke if used

(2) Use relay R1 set to operating state Fault to switch Off the product once an error is detected.

A1 : Drive

KM1 : Contactor

Control Block Wiring Diagram

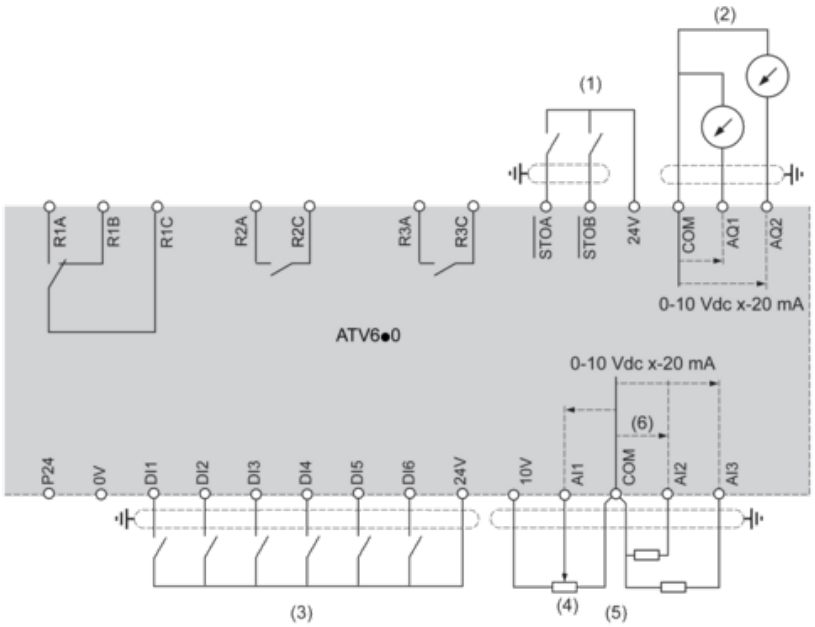

(1) Safe Torque Off
(2) Analog Output
(3) Digital Input
(4) Reference potentiometer
(5) Analog Input
R1A, R1B, R1C : Fault relay
R2A, R2C : Sequence relay
R3A, R3C : Sequence relay

Sensor Connection

It is possible to connect either 1 or 3 sensors on terminals AI2 or AI3.

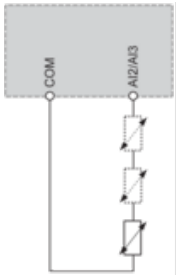

Sink / Source Switch Configuration

The switch is used to adapt the operation of the logic inputs to the technology of the programmable controller outputs.

- Set the switch to Source (factory setting) if using PLC outputs with PNP transistors.
- Set the switch to Ext if using PLC outputs with NPN transistors.

Switch Set to SRC (Source) Position Using the Output Power Supply for the Digital Inputs

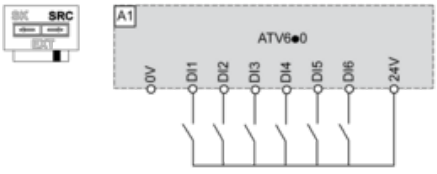

Switch Set to SRC (Source) Position and Use of an External Power Supply for the DIs

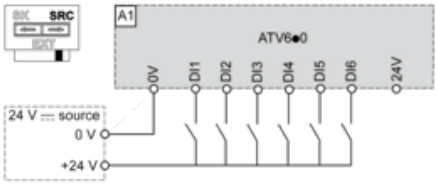

Switch Set to SK (Sink) Position Using the Output Power Supply for the Digital Inputs

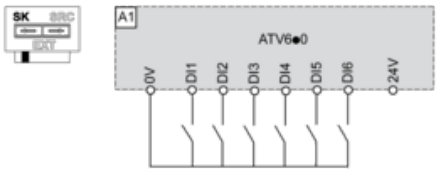

Switch Set to EXT Position Using an External Power Supply for the DIs

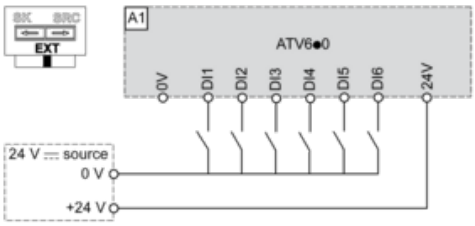

Derating Curves

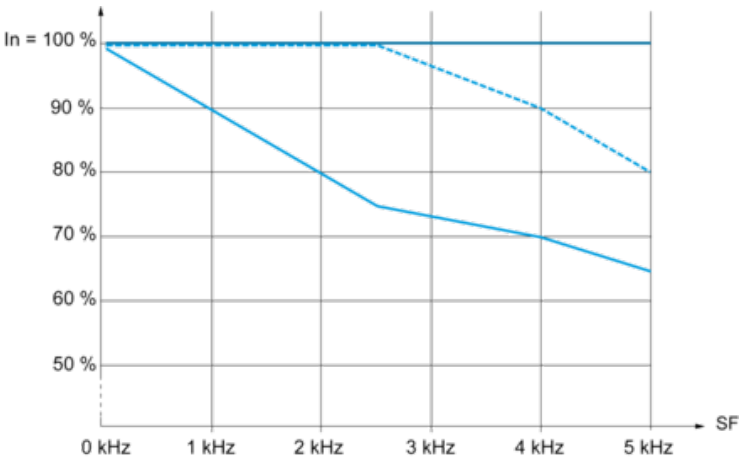

40 °C (104 °F) - Mounting type A, B and C
50 °C (122 °F) - Mounting type A, B and C
60 °C (140 °F) - Mounting type B and C

In : Nominal Drive Current

SF : Switching Frequency