Product data sheet
Characteristics

ATV71HD75N4Z
variable speed drive ATV71 - 75kW-100HP - 480V - EMC filter-w/o graphic terminal



Main

Range of Product	Altivar 71
Product or Component Type	Variable speed drive
Product specific application	Complex, high-power machines
Component name	ATV71
Motor power kW	75 kW, 3 phase 380...480 V
Maximum Horse Power Rating	100 hp, 3 phase 380...480 V
Maximum motor cable length	328.08 Ft (100 m) shielded cable 656.17 ft (200 m) unshielded cable
Power supply voltage	380...480 V - 15...10 %
Phase	3 phase
Line current	137 A 480 V 3 phase 75 kW / 100 hp 167 A 380 V 3 phase 75 kW / 100 hp
EMC filter	Integrated
Assembly style	With heat sink
Variant	Without remote graphic terminal
Apparent power	109.9 kVA 380 V 3 phase 75 kW / 100 hp
Prospective line Isc	22 kA 3 phase
Nominal output current	124 A 2.5 kHz 460 V 3 phase 75 kW / 100 hp 160 A 2.5 kHz 380 V 3 phase 75 kW / 100 hp
Maximum transient current	240 A 60 s 3 phase 75 kW / 100 hp 264 A 2 s 3 phase 75 kW / 100 hp
Output frequency	0.1…500 Hz
Nominal switching frequency	2.5 kHz
Switching frequency	1...16 kHz adjustable 2.5...16 kHz with derating factor
Asynchronous motor control profile	Voltage/Frequency ratio (2 or 5 points) Flux vector control (FVC) with sensor (current vector) ENA (Energy adaptation) system for unbalanced loads Sensorless flux vector control (SFVC) (voltage or current vector)
Type of polarization	No impedance Modbus

Complementary

Product destination	Synchronous motors Asynchronous motors
Power supply voltage limits	323…528 V
Power supply frequency	50...60 Hz - 5...5 %
Power supply frequency limits	47.5...63 Hz
Speed range	1…100 asynchronous motor in open-loop mode, without speed feedback 1…1000 asynchronous motor in closed-loop mode with encoder feedback 1…50 synchronous motor in open-loop mode, without speed feedback
Speed accuracy	+/- 0.01 % of nominal speed in closed-loop mode with encoder feedback 0.2 Tn to Tn +/- 10 % of nominal slip without speed feedback 0.2 Tn to Tn
Torque accuracy	+/- 15 % in open-loop mode, without speed feedback +/- 5 % in closed-loop mode with encoder feedback

The information provided in this documentation contains general descriptions and/or technical characteristics of the performance of the products contained herein.
This documentation is not intended as a substitute for and is not to be used for determining suitability or reliability of these products for specific user applications.
It is the duty of any such user or integrator to perform the appropriate and complete risk analysis, evaluation and testing of the products with respect to the relevant specific application or use thereof.
Neither Schneider Electric Industries SAS nor any of its affiliates or subsidiaries shall be responsible or liable for misuse of the information contained herein.

Transient overtorque	170 % +/- 10 % 60 s every 10 minutes 220 % +/- 10 % 2 s
Braking torque	<= 150 % with braking or hoist resistor 30 % without braking resistor
Synchronous motor control profile	Vector control without speed feedback
Regulation loop	Adjustable PI regulator
Motor slip compensation	Suppressable Not available in voltage/frequency ratio (2 or 5 points) Adjustable Automatic whatever the load
Diagnostic	For drive voltage 1 LED (red)
Output voltage	<= power supply voltage
Insulation	Electrical between power and control
Type of cable for mounting in an enclosure	With a NEMA Type1 kit 3 UL 508 cable 104 °F (40 °C), copper 75 °C / PVC With an IP21 or an IP31 kit 3 IEC cable 104 °F (40 °C), copper 70 °C / PVC Without mounting kit 1 IEC cable 113 °F (45 °C), copper 70 °C / PVC Without mounting kit 1 IEC cable 113 °F (45 °C), copper 90 °C / XLPE/EPR
Electrical connection	Terminal 2.5 mm², AWG 14 AI1-/AI1+, AI2, AO1, R1A, R1B, R1C, R2A, R2B, LI1...LI6, PWR) Terminal 150 mm² L1/R, L2/S, L3/T, U/T1, V/T2, W/T3, PC/-, PO, PA/+, PA, PB)
Tightening torque	5.31 Lbf.In (0.6 N.m) AI1-/AI1+, AI2, AO1, R1A, R1B, R1C, R2A, R2B, LI1...LI6, PWR) 362.88 lbf.in (41 N.m), 360 lb.in L1/R, L2/S, L3/T, U/T1, V/T2, W/T3, PC/-, PO, PA/+, PA, PB)
Supply	Internal supply for reference potentiometer (1 to 10 kOhm) 10.5 V DC +/- 5 %, <10 mA overload and short-circuit protection Internal supply 24 V DC 21…27 V), <200 mA overload and short-circuit protection
Analogue input number	2
Analogue input type	AI1-/AI1+ bipolar differential voltage +/- 10 V DC 24 V max 11 bits + sign AI2 software-configurable current 0...20 mA 242 Ohm 11 bits AI2 software-configurable voltage 0...10 V DC 24 V max 30000 Ohm 11 bits
Input sampling time	2 Ms +/- 0.5 ms AI1-/AI1+) - analog 2 Ms +/- 0.5 ms AI2) - analog 2 Ms +/- 0.5 ms LI1...LI5) - discrete 2 ms +/- 0.5 ms LI6)if configured as logic input - discrete
Response time	<= 100 ms in STO (Safe Torque Off) AO1 2 ms +/- 0.5 ms analog R1A, R1B, R1C 7 ms +/- 0.5 ms discrete R2A, R2B 7 ms +/- 0.5 ms discrete
Absolute accuracy precision	+/- 0.6 % AI1-/AI1+) for a temperature variation 60 °C +/- 0.6 % AI2) for a temperature variation 60 °C +/- 1 % AO1) for a temperature variation 60 °C
Linearity error	+/- 0.15 % of maximum value AI1-/AI1+, AI2) +/- 0.2 % AO1)
Analogue output number	1
Analogue output type	AO1 software-configurable logic output 10 V 20 mA AO1 software-configurable current 0...20 mA 500 Ohm 10 bits AO1 software-configurable voltage 0...10 V DC 470 Ohm 10 bits
Discrete output number	2
Discrete output type	Configurable relay logic R1A, R1B, R1C) NO/NC - 100000 cycles Configurable relay logic R2A, R2B) NO - 100000 cycles
Minimum switching current	3 mA 24 V DC configurable relay logic
Maximum switching current	R1, R2 2 A 250 V AC inductive, cos phi = 0.4 R1, R2 2 A 30 V DC inductive, cos phi = 0.4 R1, R2 5 A 250 V AC resistive, cos phi = 1 R1, R2 5 A 30 V DC resistive, cos phi = 1
Discrete input number	7
Discrete input type	LI1...LI5 programmable 24 V DC level 1 PLC 3500 Ohm LI6 switch-configurable 24 V DC level 1 PLC 3500 Ohm LI6 switch-configurable PTC probe 0…6 1500 Ohm PWR safety input 24 V DC 1500 Ohm ISO 13849-1 level d
Discrete input logic	Negative logic (sink) LI1...LI5), > 16 V, < 10 V Positive logic (source) LI1...LI5), < 5 V, > 11 V Negative logic (sink) LI6)if configured as logic input, > 16 V, < 10 V Positive logic (source) LI6)if configured as logic input, < 5 V, > 11 V
Acceleration and deceleration ramps	Automatic adaptation of ramp if braking capacity exceeded, by using resistor Linear adjustable separately from 0.01 to 9000 s S, U or customized

Braking to standstill	By DC injection
Protection type	Against exceeding limit speed drive Against input phase loss drive Break on the control circuit drive Input phase breaks drive Line supply overvoltage drive Line supply undervoltage drive Overcurrent between output phases and earth drive Overheating protection drive Overvoltages on the DC bus drive Short-circuit between motor phases drive Thermal protection drive Motor phase break motor Power removal motor Thermal protection motor
Insulation resistance	> 1 mOhm 500 V DC for 1 minute to earth
Frequency resolution	Analog input 0.024/50 Hz Display unit 0.1 Hz
Communication Port Protocol	CANopen Modbus
Connector type	1 RJ45 on front face)Modbus 1 RJ45 on terminal)Modbus Male SUB-D 9 on RJ45CANopen
Physical interface	2-wire RS 485 Modbus
Transmission frame	RTU Modbus
Transmission rate	4800 bps, 9600 bps, 19200 bps, 38.4 Kbps Modbus on terminal 9600 bps, 19200 bps Modbus on front face 20 kbps, 50 kbps, 125 kbps, 250 kbps, 500 kbps, 1 Mbps CANopen
Data format	8 bits, 1 stop, even parity Modbus on front face 8 bits, odd even or no configurable parity Modbus on terminal
Number of addresses	1…127 CANopen 1…247 Modbus
Method of access	Slave CANopen
Marking	CE
Operating position	Vertical +/- 10 degree
Height	24.80 in (630 mm)
Depth	11.42 in (290 mm)
Width	12.60 in (320 mm)
Net Weight	97.00 lb(US) (44 kg)
Option card	Communication card CC-Link Controller inside programmable card Communication card DeviceNet Communication card EtherNet/IP Communication card Fipio I/O extension card Communication card Interbus-S Interface card for encoder Communication card Modbus Plus Communication card Modbus TCP Communication card Modbus/Uni-Telway Overhead crane card Communication card Profibus DP Communication card Profibus DP V1

Environment

Noise level	63.7 dB 86/188/EEC
Dielectric strength	3535 V DC between earth and power terminals 5092 V DC between control and power terminals
Electromagnetic compatibility	1.2/50 µs - 8/20 µs surge immunity test level 3 IEC 61000-4-5 Conducted radio-frequency immunity test level 3 IEC 61000-4-6 Electrical fast transient/burst immunity test level 4 IEC 61000-4-4 Electrostatic discharge immunity test level 3 IEC 61000-4-2 Radiated radio-frequency electromagnetic field immunity test level 3 IEC 61000-4-3 Voltage dips and interruptions immunity test IEC 61000-4-11
Standards	IEC 60721-3-3 class 3S2 EN 61800-3 environments 2 category C3 EN 55011 class A group 2 EN 61800-3 environments 1 category C3 EN/IEC 61800-5-1 IEC 60721-3-3 class 3C1 EN/IEC 61800-3 UL Type 1
Product certifications	UL C-tick CSA NOM 117
Pollution degree	2 EN/IEC 61800-5-1 3 UL 840
IP degree of protection	IP20 on upper part without blanking plate on cover EN/IEC 60529 IP20 on upper part without blanking plate on cover EN/IEC 61800-5-1 IP21 EN/IEC 60529 IP21 EN/IEC 61800-5-1 IP41 on upper part EN/IEC 60529 IP41 on upper part EN/IEC 61800-5-1 IP54 on lower part EN/IEC 60529 IP54 on lower part EN/IEC 61800-5-1
Vibration resistance	1 gn 13…200 Hz)EN/IEC 60068-2-6 1.5 mm peak to peak 3…13 Hz)EN/IEC 60068-2-6
Shock resistance	15 gn 11 ms EN/IEC 60068-2-27
Relative humidity	5…95 % without condensation IEC 60068-2-3 5…95 % without dripping water IEC 60068-2-3
Ambient air temperature for operation	14…122 °F (-10…50 °C) without derating)
Ambient Air Temperature for Storage	-13…158 °F (-25…70 °C)
Operating altitude	<= 3280.84 ft (1000 m) without derating 3280.84...9842.52 ft (1000...3000 m) with current derating 1 % per 100 m

Ordering and shipping details

Category	22132-ATV71 - 60 THRU 150HP DRIVES
Discount Schedule	CP4C
GTIN	3389118080690
Nbr. of units in pkg.	1
Package weight(Lbs)	111.60 lb(US) (50.62 kg)
Returnability	No
Country of origin	IN

Packing Units

Unit Type of Package 1	PCE
Package 1 Height	18.50 in (47 cm)
Package 1 width	19.37 in (49.2 cm)
Package 1 Length	30.00 in (76.2 cm)
Unit Type of Package 2	P06
Number of Units in Package 2	1
Package 2 Weight	130.34 lb(US) (59.12 kg)
Package 2 Height	30.31 in (77 cm)
Package 2 width	31.50 in (80 cm)
Package 2 Length	23.62 in (60 cm)

Offer Sustainability

Sustainable offer status	Green Premium product
California proposition 65	WARNING: This product can expose you to chemicals including: Lead and lead compounds, which is known to the State of California to cause cancer and birth defects or other reproductive harm. For more information go to www.P65Warnings.ca.gov
EU RoHS Directive	Pro-active compliance (Product out of EU RoHS legal scope) EU RoHS Declaration
Mercury free	Yes
RoHS exemption information	Yes
China RoHS Regulation	China RoHS Declaration
Environmental Disclosure	Product Environmental Profile
Circularity Profile	End Of Life Information
WEEE	The product must be disposed on European Union markets following specific waste collection and never end up in rubbish bins.

Contractual warranty

Warranty	18 months

Variable Speed Drives without Graphic Display Terminal

Dimensions with or without 1 Option Card (1)

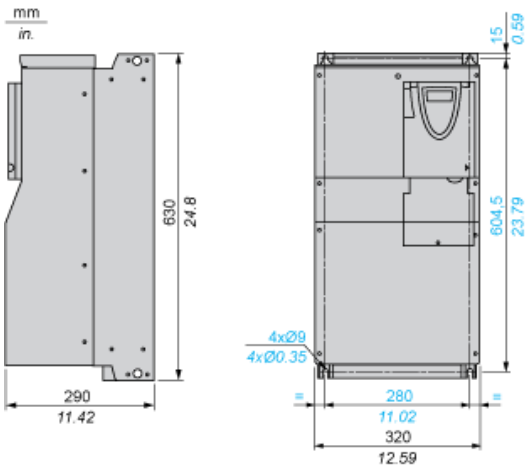

(1) Option cards: I/O extension cards, communication cards or "Controller Inside" programmable card.

Dimensions with 2 Option Cards (1)

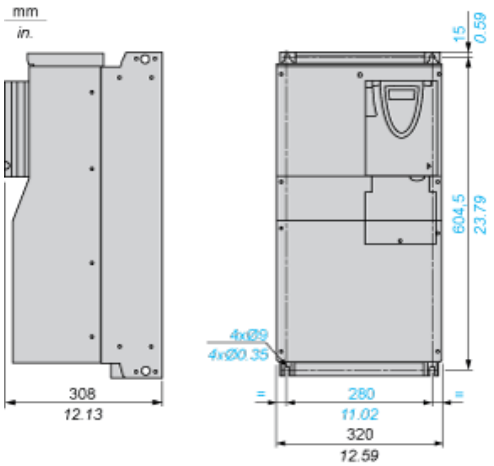

(1) Option cards: I/O extension cards, communication cards or "Controller Inside" programmable card.

Mounting Recommendations

Depending on the conditions in which the drive is to be used, its installation will require certain precautions and the use of appropriate accessories.

Install the unit vertically:

- Avoid placing it close to heating elements
- Leave sufficient free space to ensure that the air required for cooling purposes can circulate from the bottom to the top of the unit.

Clearance

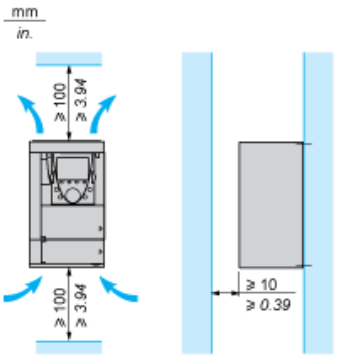

Mounting Types

Type A Mounting

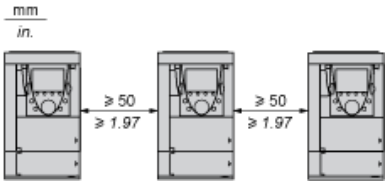

Type B Mounting

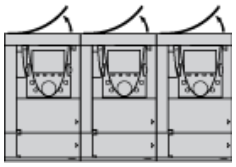

Type C Mounting

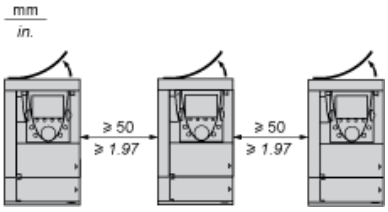

By removing the protective blanking cover from the top of the drive, the degree of protection for the drive becomes IP 20.

The protective blanking cover may vary according to the drive model (refer to the user guide).

The protective blanking cover must be removed from ATV 71P•••N4Z drives when they are mounted in a dust and damp proof enclosure.

Specific Recommendations for Mounting the Drive in an Enclosure

Ventilation

To ensure proper air circulation in the drive:

- Fit ventilation grilles.
- Ensure that there is sufficient ventilation. If there is not, install a forced ventilation unit with a filter. The openings and/or fans must provide a flow rate at least equal to that of the drive fans (refer to the product characteristics).

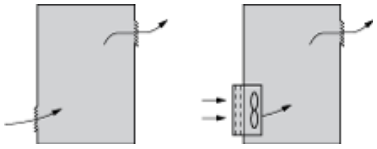

- Use special filters with IP 54 protection.
- Remove the blanking cover from the top of the drive.

Dust and Damp Proof Metal Enclosure (IP 54)

The drive must be mounted in a dust and damp proof enclosure in certain environmental conditions: dust, corrosive gases, high humidity with risk of condensation and dripping water, splashing liquid, etc.

This enables the drive to be used in an enclosure where the maximum internal temperature reaches 50°C.

Wiring Diagram Conforming to Standards EN 954-1 Category 1, IEC/EN 61508 Capacity SIL1, in Stopping Category 0 According to IEC/EN 60204-1

Three-Phase Power Supply with Upstream Breaking via Contactor

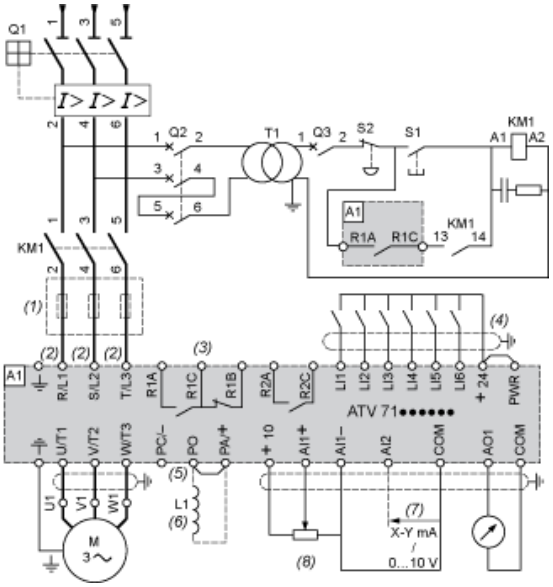

A1 ATV71 drive
KM1 Contactor
L1 DC choke
Q1 Circuit-breaker
Q2 GV2 L rated at twice the nominal primary current of T1
Q3 GB2CB05
S1, S2 XB4 B or XB5 A pushbuttons
T1 100 VA transformer 220 V secondary
(1) Line choke (three-phase); mandatory for ATV71HC11Y…HC63Y drives (except when a special transformer is used (12-pulse)).
(2) For ATV71HC40N4 drives combined with a 400 kW motor, ATV71HC50N4 and ATV71HC40Y…HC63Y, refer to the power terminal connections diagram.
(3) Fault relay contacts. Used for remote signalling of the drive status.
(4) Connection of the common for the logic inputs depends on the positioning of the SW1 switch. The above diagram shows the internal power supply switched to the “source” position (for other connection types, refer to the user guide).
(5) There is no PO terminal on ATV71HC11Y…HC63Y drives.
(6) Optional DC choke for ATV71H•••M3, ATV71HD11M3X…HD45M3X, ATV71•075N4…•D75N4 and ATV71P•••N4Z drives. Connected in place of the strap between the PO and PA/+ terminals. For ATV71HD55M3X, HD75M3X, ATV71HD90N4…HC50N4 drives, the choke is supplied with the drive; the customer is responsible for connecting it.
(7) Software-configurable current (0…20 mA) or voltage (0…10 V) analog input.
(8) Reference potentiometer.

All terminals are located at the bottom of the drive. Fit interference suppressors on all inductive circuits near the drive or connected on the same circuit, such as relays, contactors, solenoid valves, fluorescent lighting, etc.

Wiring Diagram Conforming to Standards EN 954-1 Category 1, IEC/EN 61508 Capacity SIL1, in Stopping Category 0 According to IEC/EN 60204-1

Three-Phase Power Supply with Downstream Breaking via Switch Disconnector

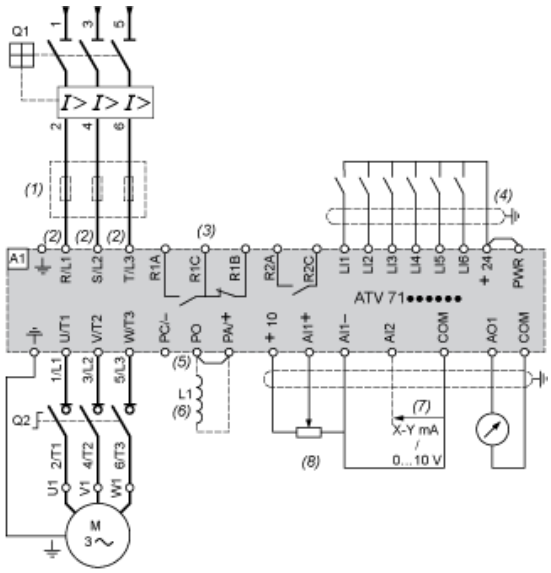

A1 ATV71 drive
L1 DC choke
Q1 Circuit-breaker
Q2 Switch disconnector (Vario)
(1) Line choke (three-phase), mandatory for ATV71HC11Y…HC63Y drives (except when a special transformer is used (12-pulse)).
(2) For ATV71HC40N4 drives combined with a 400 kW motor, ATV71HC50N4 and ATV71HC40Y…HC63Y, refer to the power terminal connections diagram.
(3) Fault relay contacts. Used for remote signalling of the drive status.
(4) Connection of the common for the logic inputs depends on the positioning of the SW1 switch. The above diagram shows the internal power supply switched to the “source” position (for other connection types, refer to the user guide).
(5) There is no PO terminal on ATV71HC11Y…HC63Y drives.
(6) Optional DC choke for ATV71H•••M3, ATV71HD11M3X…HD45M3X, ATV71•075N4…•D75N4 and ATV71P•••N4Z drives. Connected in place of the strap between the PO and PA/+ terminals. For ATV71HD55M3X, HD75M3X, ATV71HD90N4…HC50N4 drives, the choke is supplied with the drive; the customer is responsible for connecting it.
(7) Software-configurable current (0…20 mA) or voltage (0…10 V) analog input.
(8) Reference potentiometer.

All terminals are located at the bottom of the drive. Fit interference suppressors on all inductive circuits near the drive or connected on the same circuit, such as relays, contactors, solenoid valves, fluorescent lighting, etc.

Wiring Diagram Conforming to Standards EN 954-1 Category 3, IEC/EN 61508 Capacity SIL2, in Stopping Category 0 According to IEC/EN 60204-1

Life Is On Schneider Electric

Three-Phase Power Supply, Low Inertia Machine, Vertical Movement

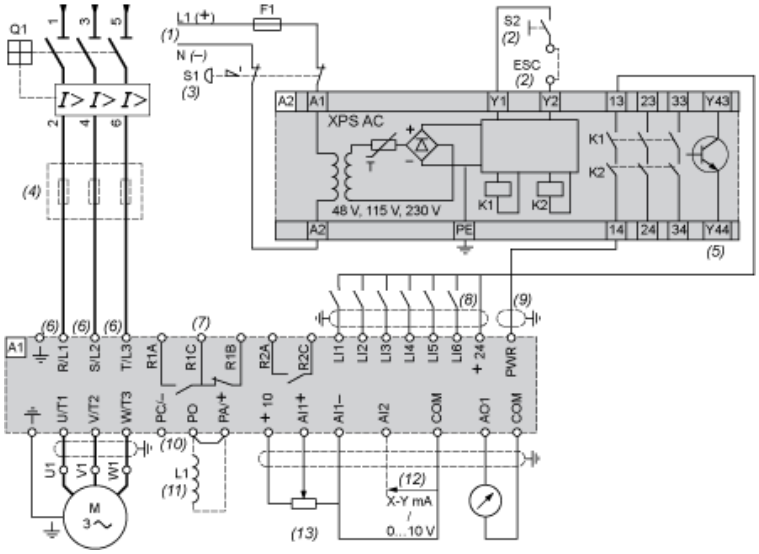

A1 ATV71 drive
A2 Preventa XPS AC safety module for monitoring emergency stops and switches. One safety module can manage the “Power Removal” function for several drives on the same machine. In this case, each drive must connect its PWR terminal to its + 24 V via the safety contacts on the XPS AC module. These contacts are independent for each drive.
F1 Fuse
L1 DC choke
Q1 Circuit-breaker
S1 Emergency stop button with 2 contacts
S2 XB4 B or XB5 A pushbutton
(1) Power supply: 24 Vdc or Vac, 48 Vac, 115 Vac, 230 Vac.
(2) S2: resets XPS AC module on power-up or after an emergency stop. ESC can be used to set external starting conditions.
(3) Requests freewheel stopping of the movement and activates the “Power Removal” safety function.
(4) Line choke (three-phase), mandatory for and ATV71HC11Y…HC63Y drives (except when a special transformer is used (12-pulse)).
(5) The logic output can be used to signal that the machine is in a safe stop state.
(6) For ATV71HC40N4 drives combined with a 400 kW motor, ATV71HC50N4 and ATV71HC40Y…HC63Y, refer to the power terminal connections diagram.
(7) Fault relay contacts. Used for remote signalling of the drive status.
(8) Connection of the common for the logic inputs depends on the positioning of the SW1 switch. The above diagram shows the internal power supply switched to the “source” position (for other connection types, refer to the user guide).
(9) Standardized coaxial cable, type RG174/U according to MIL-C17 or KX3B according to NF C 93-550, external diameter 2.54 mm /0.09 in., maximum length 15 m / 49.21 ft. The cable shielding must be earthed.
(10) There is no PO terminal on ATV71HC11Y…HC63Y drives.
(11) Optional DC choke for ATV71H•••M3, ATV71HD11M3X…HD45M3X, ATV71•075N4…•D75N4 and ATV71P•••N4Z drives. Connected in place of the strap between the PO and PA/+ terminals. For ATV71HD55M3X, HD75M3X, ATV71HD90N4…HC50N4 drives, the choke is supplied with the drive; the customer is responsible for connecting it.
(12) Software-configurable current (0…20 mA) or voltage (0…10 V) analog input.
(13) Reference potentiometer.

All terminals are located at the bottom of the drive. Fit interference suppressors on all inductive circuits near the drive or connected on the same circuit, such as relays, contactors, solenoid valves, fluorescent lighting, etc.

Wiring Diagram Conforming to Standards EN 954-1 Category 3, IEC/EN 61508 Capacity SIL2, in Stopping Category 1 According to IEC/EN 60204-1

Three-Phase Power Supply, High Inertia Machine

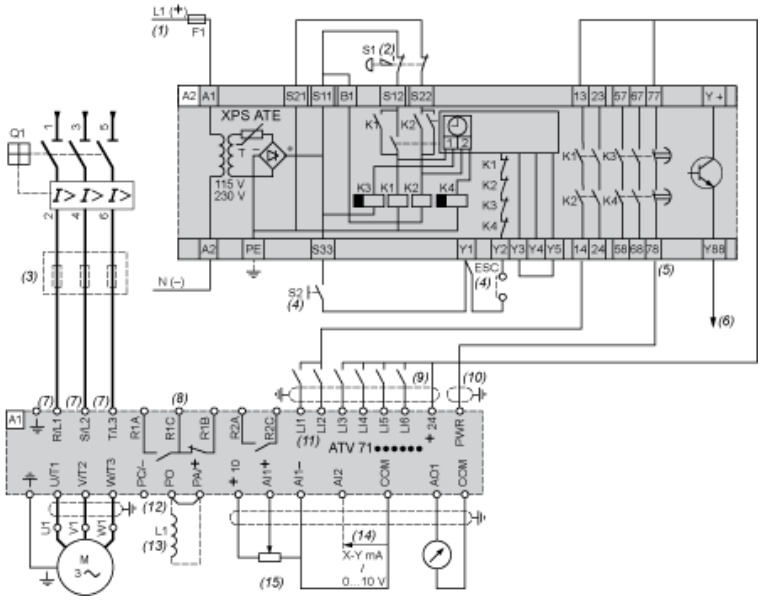

A1 ATV71 drive
A2 Preventa XPS ATE safety module for monitoring emergency stops and switches. One safety module can manage the "Power Removal"
(5) safety function for several drives on the same machine. In this case the time delay must be adjusted on the drive controlling the motor that requires the longest stopping time. In addition, each drive must connect its PWR terminal to its + 24 V via the safety contacts on the XPS ATE module. These contacts are independent for each drive.
F1 Fuse
L1 DC choke
Q1 Circuit-breaker
S1 Emergency stop button with 2 N/C contacts
S2 Run button
(1) Power supply: 24 Vdc or Vac, 115 Vac, 230 Vac.
(2) Requests controlled stopping of the movement and activates the “Power Removal” safety function.
(3) Line choke (three-phase), mandatory for ATV71HC11Y…HC63Y drives (except when a special transformer is used (12-pulse)).
(4) S2: resets XPS ATE module on power-up or after an emergency stop. ESC can be used to set external starting conditions.
(5) For stopping times requiring more than 30 seconds in category 1, use a Preventa XPS AV safety module which can provide a maximum time delay of 300 seconds.
(6) The logic output can be used to signal that the machine is in a safe state.
(7) For ATV71HC40N4 drives combined with a 400 kW motor, ATV71HC50N4 and ATV71HC40Y…HC63Y, refer to the power terminal connections diagram.
(8) Fault relay contacts. Used for remote signalling of the drive status.
(9) Connection of the common for the logic inputs depends on the positioning of the SW1 switch. The above diagram shows the internal power supply switched to the “source” position (for other connection types, refer to the user guide).
(10) Standardized coaxial cable, type RG174/U according to MIL-C17 or KX3B according to NF C 93-550, external diameter 2.54 mm/0.09 in., maximum length 15 m/49.21 ft. The cable shielding must be earthed.
(11) Logic inputs LI1 and LI2 must be assigned to the direction of rotation: LI1 in the forward direction and LI2 in the reverse direction.
(12) There is no PO terminal on ATV71HC11Y…HC63Y drives.
(13) Optional DC choke for ATV71H•••M3, ATV71HD11M3X…HD45M3X, ATV71•075N4…•D75N4 and ATV71P•••N4Z drives. Connected in place of the strap between the PO and PA/+ terminals. For ATV71HD55M3X, HD75M3X, ATV71HD90N4…HC50N4 drives, the choke is supplied with the drive; the customer is responsible for connecting it.
(14) Software-configurable current (0…20 mA) or voltage (0…10 V) analog input.
(15) Reference potentiometer.

All terminals are located at the bottom of the drive. Fit interference suppressors on all inductive circuits near the drive or connected on the same circuit, such as relays, contactors, solenoid valves, fluorescent lighting, etc.

Life Is On Schneider Electric

Derating Curves

The derating curves for the drive nominal current (In) depend on the temperature, the switching frequency and the mounting type. For intermediate temperatures (e.g. 55°C), interpolate between 2 curves.

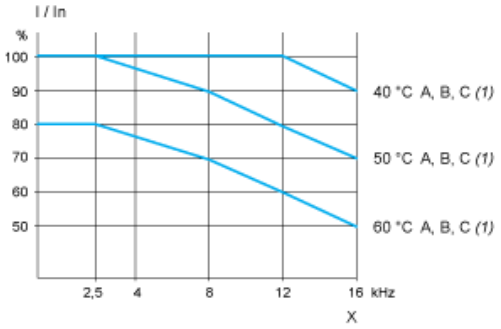

X Switching frequency
(1) Mounting type

Above 50ºC, the drive should be fitted with a control card fan kit.