# Product data sheet
## Characteristics

# ATV930D22Y6
## Variable speed drive, Altivar Process ATV900, ATV930, 22kW/30 hp, 500V/690 V, IP00

The information provided in this documentation contains general descriptions and/or technical characteristics of the performance of the products contained herein.
This documentation is not intended as a substitute for and is not to be used for determining suitability or reliability of these products for specific user applications.
It is the duty of any such user or integrator to perform the appropriate and complete risk analysis, evaluation and testing of the products with respect to the relevant specific application or use thereof.
Neither Schneider Electric Industries SAS nor any of its affiliates or subsidiaries shall be responsible or liable for misuse of the information contained herein.



## Main

| | |
|---|---|
| Range of Product | Altivar Process ATV900 |
| Device Application | Industrial Application |
| Product or Component Type | Variable speed drive |
| Product destination | Asynchronous motors<br>Synchronous motors |
| Product Specific Application | Process for industrial |
| Variant | Standard version<br>With braking chopper |
| Phase | 3 phase |
| Mounting Mode | Wall mount |
| Communication Port Protocol | Modbus serial<br>Modbus TCP<br>EtherNet/IP |
| [Us] rated supply voltage | 500...690 V - 15...10 % |
| Motor power kW | 18.5 KW normal duty<br>15.0 kW heavy duty |
| Maximum Horse Power Rating | 25.0 Hp normal duty<br>20.0 hp heavy duty |
| Continuous output current | 29 A 4 kHz normal duty<br>24 A 4 kHz heavy duty |
| EMC filter | Integrated<br>With EMC plate option |
| IP degree of protection | IP21 |
| Degree of protection | UL type 1 |
| Option module | Slot A communication module Profibus DP V1<br>Slot A communication module PROFINET<br>Slot A communication module DeviceNet<br>Slot A communication module EtherCAT<br>Slot A communication module CANopen daisy chain RJ45<br>Slot A communication module CANopen SUB-D 9<br>Slot A communication module CANopen screw terminals<br>Slot A/slot B/slot C digital and analog I/O extension module<br>Slot A/slot B/slot C output relay extension module<br>Slot B 5/12 V digital encoder interface module<br>Slot B analog encoder interface module<br>Slot B resolver encoder interface module<br>Communication module Ethernet Powerlink |
| Discrete input logic | 16 preset speeds |
| Asynchronous motor control profile | Constant torque standard<br>Optimized torque mode<br>Variable torque standard |
| Synchronous motor control profile | Permanent magnet motor<br>Synchronous reluctance motor |
| Maximum output frequency | 599 Hz |
| Switching frequency | 2...8 kHz adjustable<br>4...8 kHz with derating factor |
| Nominal switching frequency | 4 kHz |
| Line current | 27.6 A 500 V normal duty)<br>23.2 A 500 V heavy duty)<br>26.0 A 690 V normal duty)<br>23.0 A 690 V heavy duty) |
| Apparent power | 31.1 KVA 690 V normal duty)<br>27.5 kVA 690 V heavy duty) |
| Maximum transient current | 34.8 A 60 s normal duty)<br>36 A 60 s heavy duty) |

| | |
|---|---|
| Network Frequency | 50-60 Hz |
| Prospective line Isc | 70 kA |

## Complementary

| | |
|---|---|
| Discrete input number | 10 |
| Discrete input type | DI1...DI8 programmable, 24 V DC <= 30 V)3.5 kOhm<br>DI7, DI8 programmable as pulse input 0…30 kHz, 24 V DC <= 30 V)<br>STOA, STOB safe torque off, 24 V DC <= 30 V)> 2.2 kOhm |
| Discrete output number | 2 |
| Discrete output type | Logic output DQ+ 0…1 kHz <= 30 V DC 100 mA<br>Programmable as pulse output DQ+ 0…30 kHz <= 30 V DC 20 mA<br>Logic output DQ- 0…1 kHz <= 30 V DC 100 mA |
| Analogue input number | 3 |
| Analogue input type | AI1, AI2, AI3 software-configurable voltage 0...10 V DC 30 kOhm 12 bits<br>AI1, AI2, AI3 software-configurable current 0...20 mA/4...20 mA 250 Ohm 12 bits |
| Analogue output number | 2 |
| Analogue output type | Software-configurable voltage AQ1, AQ2 0...10 V DC 470 Ohm 10 bits<br>Software-configurable current AQ1, AQ2 0...20 mA 500 Ohm 10 bits |
| Relay output number | 3 |
| Relay output type | Configurable relay logic R1 fault relay NO/NC 100000 cycles<br>Configurable relay logic R2 sequence relay NO 1000000 cycles<br>Configurable relay logic R3 sequence relay NO 1000000 cycles |
| Maximum switching current | Relay output R1 resistive, cos phi = 1 3 A 250 V AC<br>Relay output R1 resistive, cos phi = 1 3 A 30 V DC<br>Relay output R1 inductive, cos phi = 0.4 7 ms 2 A 250 V AC<br>Relay output R1 inductive, cos phi = 0.4 7 ms 2 A 30 V DC<br>Relay output R2, R3 resistive, cos phi = 1 5 A 250 V AC<br>Relay output R2, R3 resistive, cos phi = 1 5 A 30 V DC<br>Relay output R2, R3 inductive, cos phi = 0.4 7 ms 2 A 250 V AC<br>Relay output R2, R3 inductive, cos phi = 0.4 7 ms 2 A 30 V DC |
| Minimum switching current | Relay output R1, R2, R3 5 mA 24 V DC |
| Physical interface | Ethernet<br>2-wire RS 485 |
| Connector Type | 2 RJ45<br>1 RJ45 |
| Method of access | Slave Modbus TCP |
| Transmission Rate | 10, 100 Mbits<br>4.8 kbps<br>9600 bit/s<br>19200 bit/s |
| Transmission frame | RTU |
| Number of addresses | 1…247 |
| Data format | 8 bits, configurable odd, even or no parity |
| Type of polarization | No impedance |
| 4 quadrant operation possible | True |
| Acceleration and deceleration ramps | S, U or customized<br>Linear adjustable separately from 0.01...9999 s |
| Motor slip compensation | Not available in permanent magnet motor law<br>Adjustable<br>Automatic whatever the load<br>Can be suppressed |
| Braking to standstill | By DC injection |
| Brake chopper integrated | True |
| Maximum Input Current per Phase | 27.6 A |
| Maximum output voltage | 690.0 V |
| Relative symmetric network frequency tolerance | 5 % |
| Base load current at high overload | 24.0 A |
| Base load current at low overload | 29.0 A |
| Power dissipation in W | Forced convection 463 W 500 V 4 kHz<br>Natural convection 138 W 500 V 4 kHz |
| With safety function Safely Limited Speed (SLS) | True |
| With safety function Safe brake management (SBC/ SBT) | True |
| With safety function Safe Operating Stop (SOS) | False |

| | |
|---|---|
| With safety function Safe Position (SP) | False |
| With safety function Safe programmable logic | False |
| With safety function Safe Speed Monitor (SSM) | False |
| With safety function Safe Stop 1 (SS1) | True |
| With sft fct Safe Stop 2 (SS2) | False |
| With safety function Safe torque off (STO) | True |
| With safety function Safely Limited Position (SLP) | False |
| With safety function Safe Direction (SDI) | False |
| Protection type | Thermal protection motor<br>Safe torque off motor<br>Motor phase break motor<br>Thermal protection drive<br>Safe torque off drive<br>Overheating drive<br>Overcurrent between output phases and earth drive<br>Overload of output voltage drive<br>Short-circuit protection drive<br>Motor phase break drive<br>Overvoltages on the DC bus drive<br>Line supply overvoltage drive<br>Line supply undervoltage drive<br>Line supply phase loss drive<br>Overspeed drive<br>Break on the control circuit drive |
| Quantity per Set | 1 |
| Width | 9.69 in (246 mm) |
| Height | 16.54 in (420 mm) |
| Depth | 9.53 in (242 mm) |
| Net Weight | 48.50 lb(US) (22 kg) |
| Electrical connection | Control screw terminal 0.5...1.5 mm² AWG 20...AWG 16<br>Motor screw terminal 10 mm² AWG 8<br>Line side screw terminal 10 mm² AWG 8<br>DC bus screw terminal 10 mm² AWG 8 |
| Transmission Rate | 10/100 Mbit/s Ethernet IP/Modbus TCP<br>4.8, 9.6, 19.2, 38.4 kbit/s Modbus serial |
| Exchange mode | Half duplex, full duplex, autonegotiation Ethernet IP/Modbus TCP |
| Data format | 8 bits, configurable odd, even or no parity Modbus serial |
| Type of polarization | No impedance Modbus serial |
| Number of addresses | 1…247 Modbus serial |
| Supply | External supply for digital inputs 24 V DC 19…30 V), <1.25 mA overload and short-circuit protection<br>Internal supply for reference potentiometer (1 to 10 kOhm) 10.5 V DC +/- 5 %, <10 mA overload and short-circuit protection<br>Internal supply for digital inputs and STO 24 V DC 21…27 V), <200 mA overload and short-circuit protection |
| Local signalling | Local diagnostic 3 LED mono/dual colour)<br>Presence of voltage 1 LED red)<br>Embedded communication status 3 LED dual colour)<br>Communication module status 4 LED dual colour) |
| Input compatibility | DI1...DI8 discrete input level 1 PLC EN/IEC 61131-2<br>DI7, DI8 pulse input level 1 PLC IEC 65A-68<br>STOA, STOB discrete input level 1 PLC EN/IEC 61131-2 |
| Discrete input logic | Positive logic (source) DI1...DI8), < 5 V, > 11 V<br>Negative logic (sink) DI1...DI8), > 16 V, < 10 V<br>Positive logic (source) DI7, DI8), < 0.6 V, > 2.5 V<br>Positive logic (source) STOA, STOB), < 5 V, > 11 V |
| Sampling duration | 2 Ms +/- 0.5 ms DI1...DI8) - discrete input<br>5 Ms +/- 1 ms DI7, DI8) - pulse input<br>1 Ms +/- 1 ms AI1, AI2, AI3) - analog input<br>5 ms +/- 1 ms AQ1, AQ2) - analog output |
| Accuracy | +/- 0.6 % AI1, AI2, AI3 for a temperature variation 60 °C analog input<br>+/- 1 % AQ1, AQ2 for a temperature variation 60 °C analog output |
| Linearity error | AI1, AI2, AI3 +/- 0.15 % of maximum value analog input<br>AQ1, AQ2 +/- 0.2 % analog output |
| Refresh time | Relay output R1, R2, R3)5 ms +/- 0.5 ms) |
| Isolation | Between power and control terminals |

## Environment

| | |
|---|---|
| Operating altitude | <= 3280.84 ft (1000 m) without derating<br>1000...4800 m with current derating 1 % per 100 m |
| Operating position | Vertical +/- 10 degree |
| Product Certifications | TÜV<br>CSA<br>UL |
| Marking | CE |
| Standards | UL 508C<br>EN/IEC 61800-3<br>EN/IEC 61800-5-1<br>IEC 61000-3-12<br>IEC 60721-3<br>IEC 61508<br>IEC 13849-1 |
| Assembly style | Enclosed |
| Electromagnetic compatibility | Electrostatic discharge immunity test level 3 IEC 61000-4-2<br>Radiated radio-frequency electromagnetic field immunity test level 3 IEC 61000-4-3<br>Electrical fast transient/burst immunity test level 4 IEC 61000-4-4<br>1.2/50 µs - 8/20 µs surge immunity test level 3 IEC 61000-4-5<br>Conducted radio-frequency immunity test level 3 IEC 61000-4-6 |
| Environmental class (during operation) | Class 3C3 according to IEC 60721-3-3<br>Class 3S3 according to IEC 60721-3-3 |
| Maximum acceleration under shock impact (during operation) | 150 m/s² at 11 ms |
| Maximum acceleration under vibrational stress (during operation) | 10 m/s² at 13...200 Hz |
| Maximum deflection under vibratory load (during operation) | 1.5 mm at 2...13 Hz |
| Permitted relative humidity (during operation) | Class 3K5 according to EN 60721-3 |
| Volume of cooling air | 87178.34 Gal/hr(US) (330 m3/h) |
| Overvoltage category | III |
| Regulation loop | Adjustable PID regulator |
| Insulation resistance | > 1 MOhm 500 V DC for 1 minute to earth |
| Noise level | 58 dB 86/188/EEC |
| Vibration resistance | 1.5 mm peak to peak 2…13 Hz)IEC 60068-2-6<br>1 gn 13…200 Hz)IEC 60068-2-6 |
| Shock resistance | 15 gn 11 ms IEC 60068-2-27 |
| Environmental characteristic | Chemical pollution resistance class 3C3 EN/IEC 60721-3-3<br>Dust pollution resistance class 3S3 EN/IEC 60721-3-3 |
| Relative humidity | 5…95 % without condensation IEC 60068-2-3 |
| Ambient air temperature for operation | 5…122 °F (-15…50 °C) without derating)<br>122…140 °F (50…60 °C) with derating factor) |
| Noise level | 58 dB |
| Pollution degree | 2 |
| Ambient air transport temperature | -40…158 °F (-40…70 °C) |
| Ambient Air Temperature for Storage | -40…158 °F (-40…70 °C) |

## Ordering and shipping details

| | |
|---|---|
| Category | 22276-ATV930 FRAMES 1 & 2 |
| Discount Schedule | CP4E |
| GTIN | 3606481325327 |
| Returnability | Yes |
| Country of origin | IN |

## Packing Units

| | |
|---|---|
| Unit Type of Package 1 | PCE |
| Number of Units in Package 1 | 1 |
| Package 1 Height | 19.29 in (49.0 cm) |
| Package 1 Width | 15.75 in (40.0 cm) |
| Package 1 Length | 31.50 in (80.0 cm) |
| Package 1 Weight | 92.59 lb(US) (42.0 kg) |

## Offer Sustainability

| | |
|---|---|
| Sustainable offer status | Green Premium product |
| California proposition 65 | WARNING: This product can expose you to chemicals including: Lead and lead compounds, which is known to the State of California to cause cancer and birth defects or other reproductive harm. For more information go to www.P65Warnings.ca.gov |
| REACh Regulation | REACh Declaration |
| EU RoHS Directive | Pro-active compliance (Product out of EU RoHS legal scope) EU RoHS Declaration |
| Mercury free | Yes |
| China RoHS Regulation | China RoHS Declaration |
| RoHS exemption information | Yes |
| Environmental Disclosure | Product Environmental Profile |
| Circularity Profile | End Of Life Information |
| WEEE | The product must be disposed on European Union markets following specific waste collection and never end up in rubbish bins. |
| Upgradeability | Upgraded components available |

## Dimensions

### Drives without Top Cover

Front View with EMC Plate, Front, Left and Rear View without EMC Plate

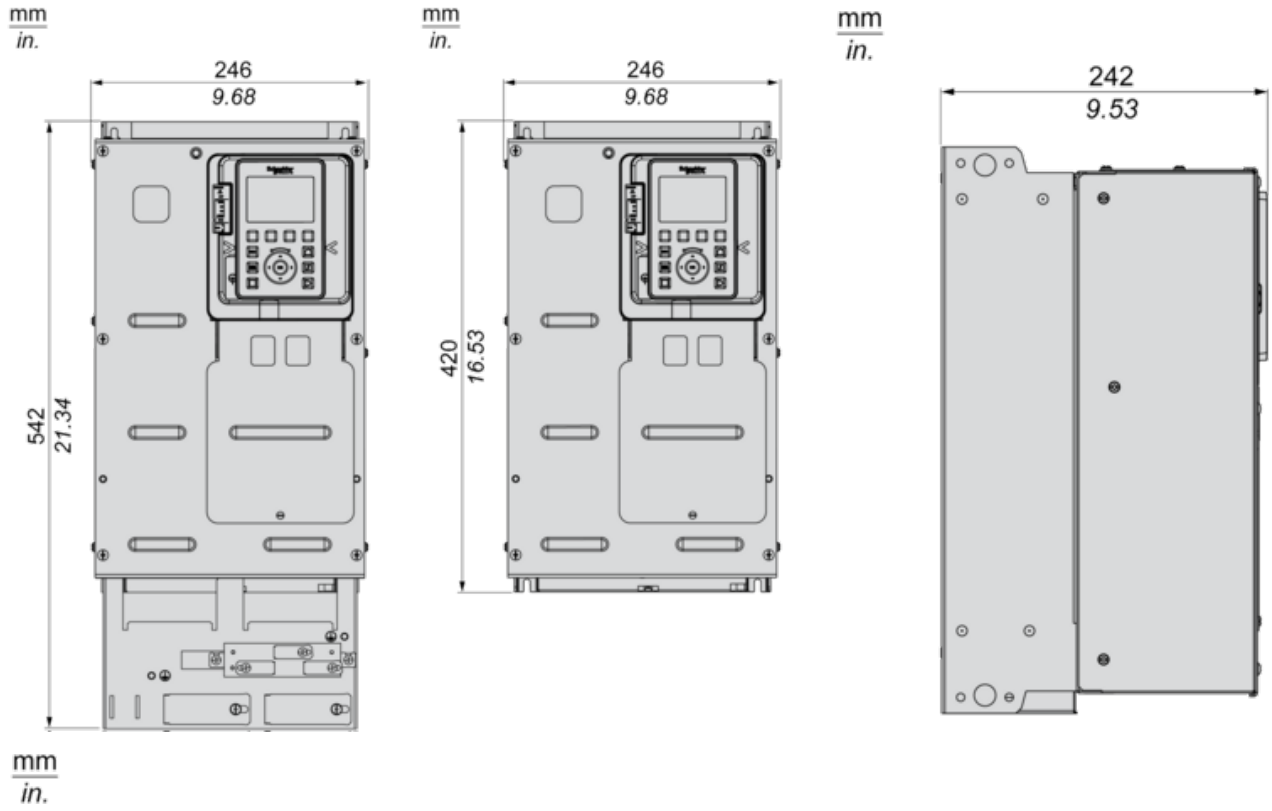


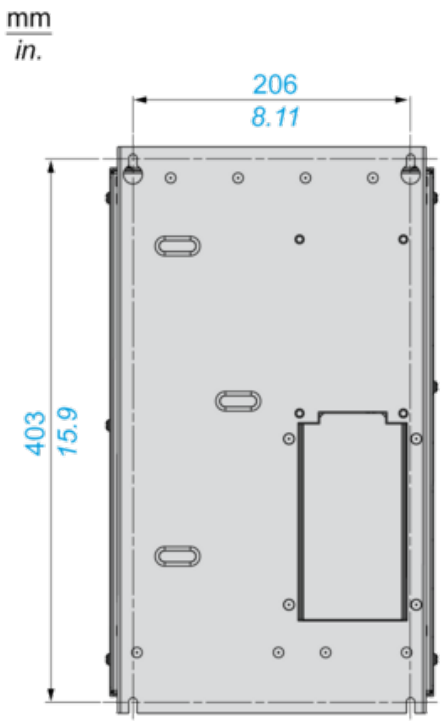


### Drives with IP20 Top Cover

Front, Left and Rear View

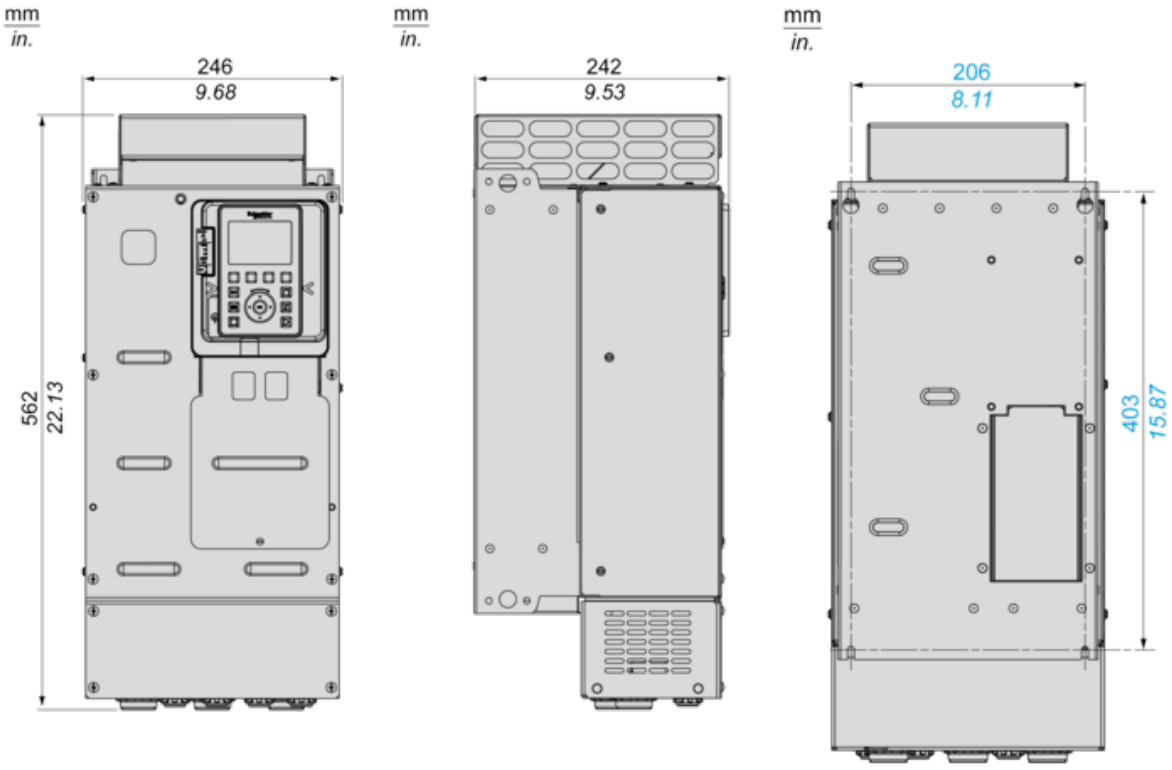
mm
in.
246
9.68
562
22.13
mm
in.
242
9.53
mm
in.
206
8.11
403
15.87

## Clearances

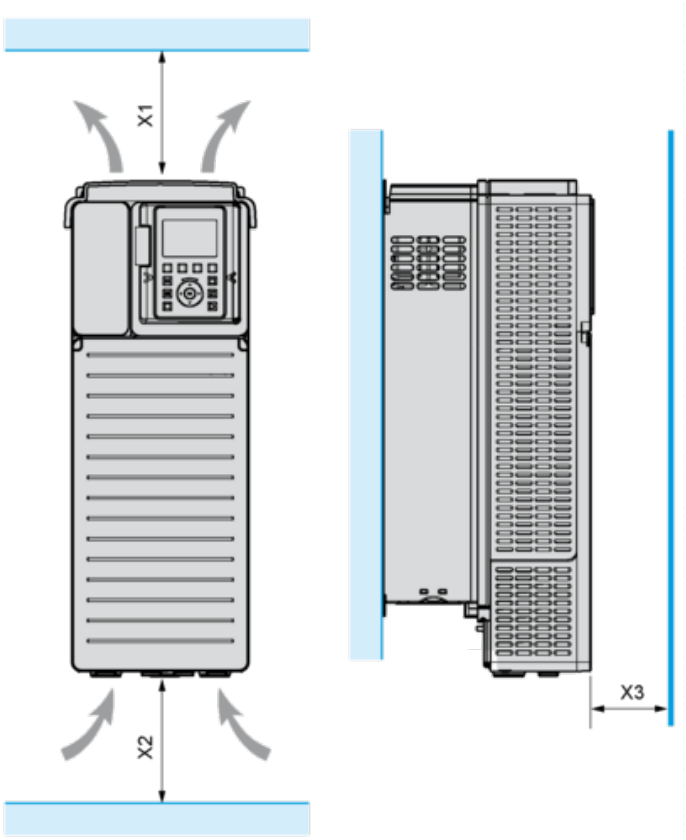


| X1 | X2 | X3 |
|---|---|---|
| ≥ 100 mm (3.94 in.) | ≥ 100 mm (3.94 in.) | ≥ 10 mm (0.39 in.) |

- Mount the device in a vertical position (±10°). This is required for cooling the device.
- Do not mount the device close to heat sources.
- Leave sufficient free space so that the air required for cooling purposes can circulate from the bottom to the top of the drive.

## Mounting Types

### Mounting Type A: Individual IP21

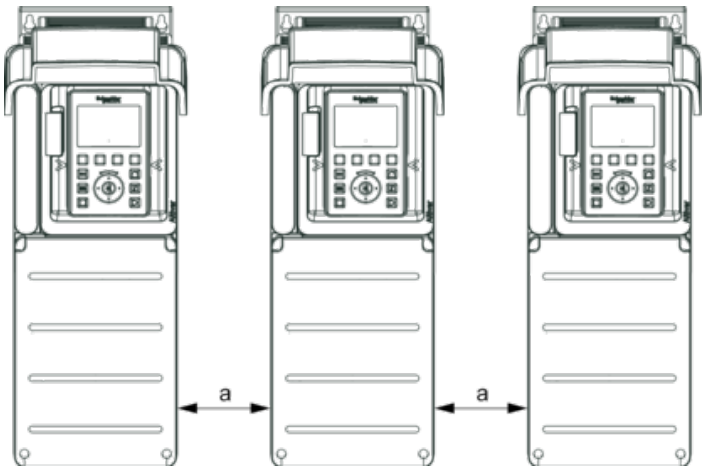

a ≥ 0

## Mounting Type B: Side by Side IP20

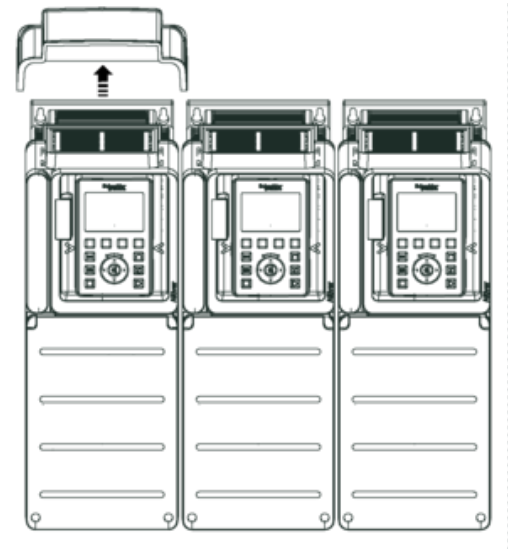

## Mounting Type C: Individual IP20

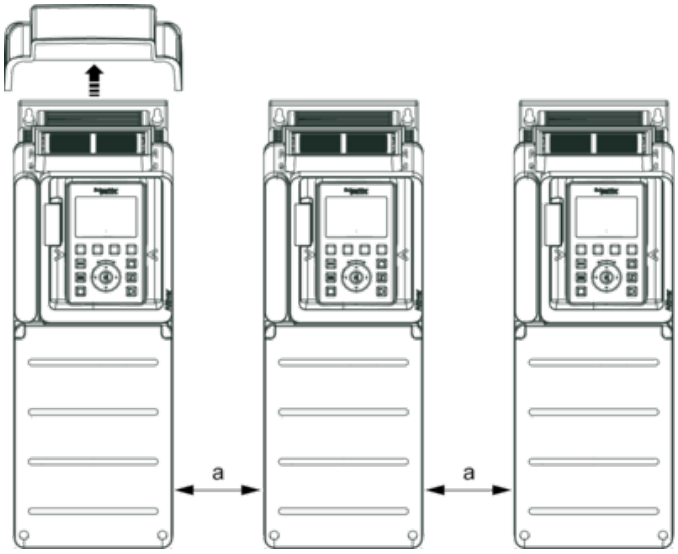


a ≥ 0

## Three-Phase Power Supply with Upstream Breaking via Line Contactor

Connection diagrams conforming to standards EN 954-1 category 1 and IEC/EN 61508 capacity SIL1, stopping category 0 in accordance with standard IEC/EN 60204-1

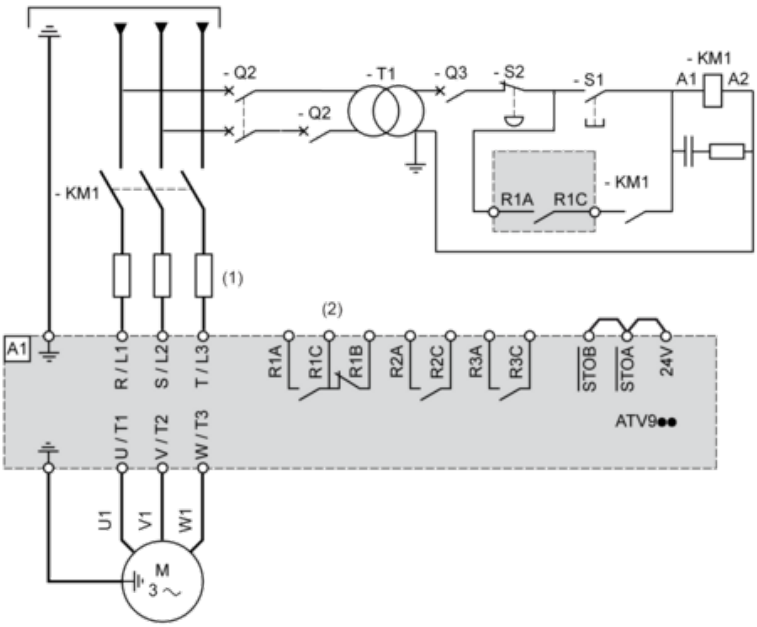


(1) Line choke if used

(2) Use relay R1 set to operating state Fault to switch Off the product once an error is detected.

A1 : Drive

KM1 : Line Contactor

Q2, Q3 : Circuit breakers

S1, S2 : Pushbuttons

T1 : Transformer for control part

## Three-Phase Power Supply with Downstream Breaking via Contactor

Connection diagrams conforming to standards EN 954-1 category 1 and IEC/EN 61508 capacity SIL1, stopping category 0 in accordance with standard IEC/EN 60204-1

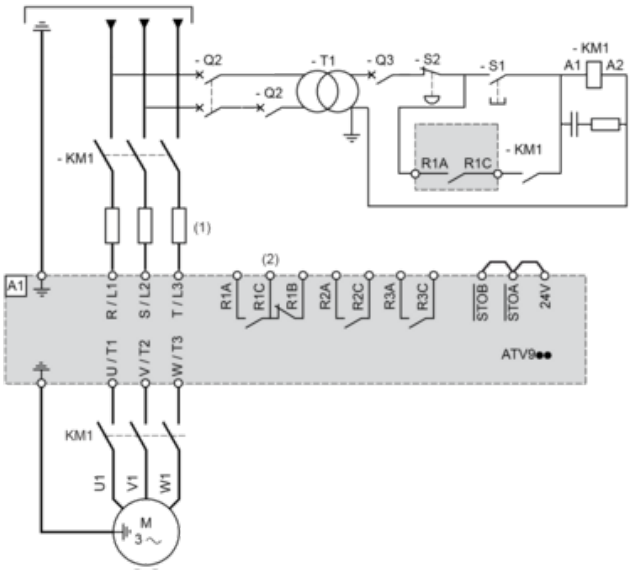

(1) Line choke if used
(2) Use relay R1 set to operating state Fault to switch Off the product once an error is detected.
A1 : Drive
KM1 : Contactor

## Control Block Wiring Diagram

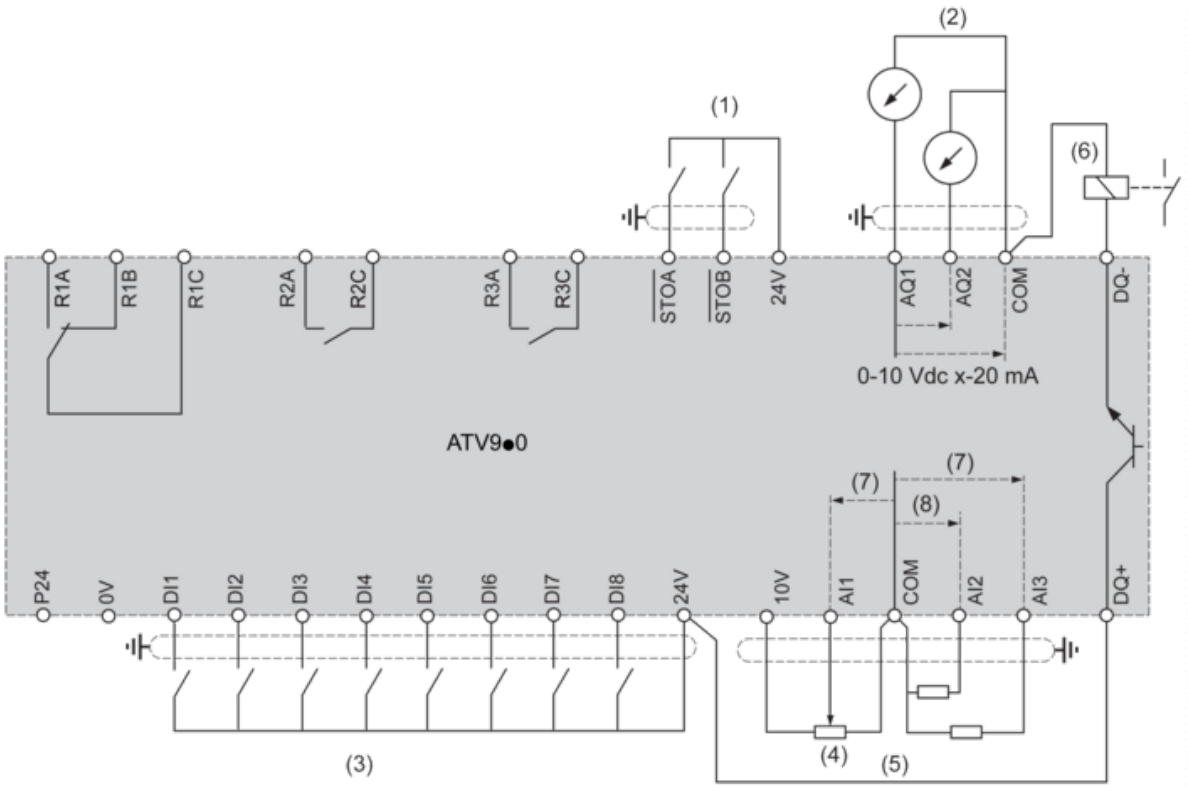


(1) Safe Torque Off
(2) Analog Output
(3) Digital Input
(4) Reference potentiometer
(5) Analog Input
(6) Digital Output
(7) 0-10 Vdc, x-20 mA
(8) 0-10 Vdc, -10 Vdc...+10 Vdc
R1A, R1B, R1C : Fault relay
R2A, R2C : Sequence relay
R3A, R3C : Sequence relay

## Sensor Connection

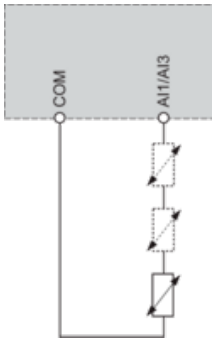


It is possible to connect either 1 or 3 sensors on terminals AI1 or AI3

## Sink / Source Switch Configuration

The switch is used to adapt the operation of the logic inputs to the technology of the programmable controller outputs.


Life Is On Schneider Electric

- Set the switch to Source (factory setting) if using PLC outputs with PNP transistors.
- Set the switch to Ext if using PLC outputs with NPN transistors.

## Switch Set to SRC (Source) Position Using the Output Power Supply for the Digital Inputs

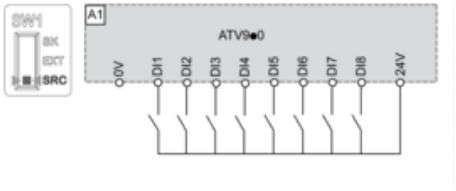


## Switch Set to SRC (Source) Position and Use of an External Power Supply for the DIs

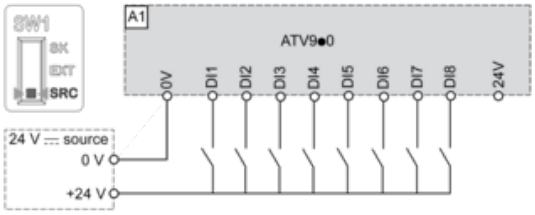


## Switch Set to SK (Sink) Position Using the Output Power Supply for the Digital Inputs

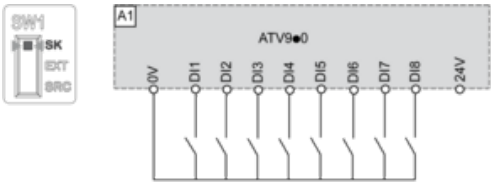


## Switch Set to EXT Position Using an External Power Supply for the DIs

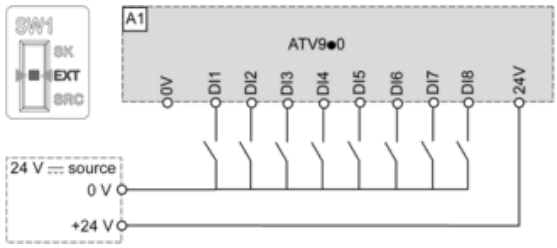

## Derating Curves

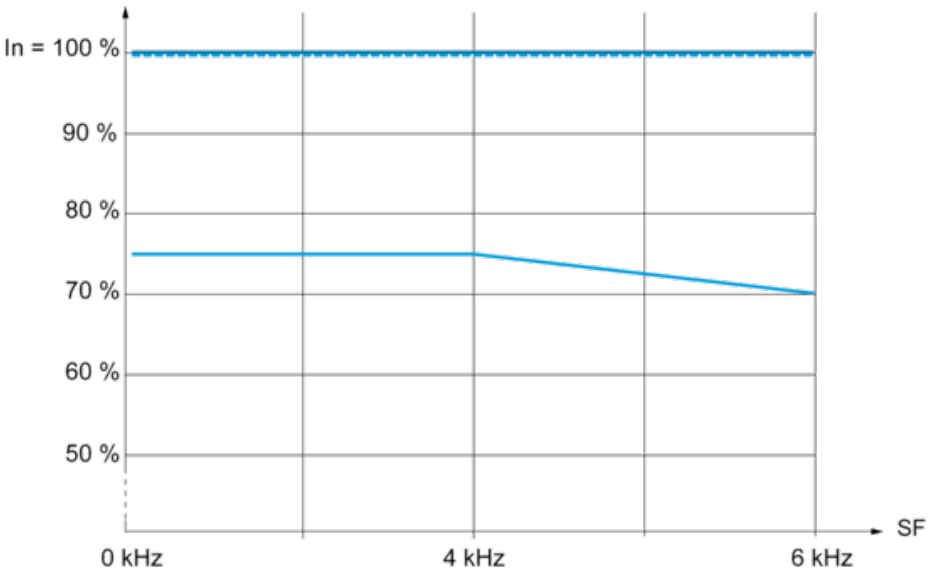


40 °C (104 °F) - Mounting type A, B and C
50 °C (122 °F) - Mounting type A, B and C
60 °C (140 °F) - Mounting type B and C

In : Nominal Drive Current

SF : Switching Frequency