Product data sheet
Characteristics

ATV930D45M3
Variable speed drive, Altivar Process ATV900, ATV930, 45 kW, 200/240 V, with braking unit, IP21

The information provided in this documentation contains general descriptions and/or technical characteristics of the performance of the products contained herein.
This documentation is not intended as a substitute for and is not to be used for determining suitability or reliability of these products for specific user applications.
It is the duty of any such user or integrator to perform the appropriate and complete risk analysis, evaluation and testing of the products with respect to the relevant specific application or use thereof.
Neither Schneider Electric Industries SAS nor any of its affiliates or subsidiaries shall be responsible or liable for misuse of the information contained herein.



Main

Range of Product	Altivar Process ATV900
Device Application	Industrial Application
Product or Component Type	Variable speed drive
Product destination	Asynchronous motors Synchronous motors
Product Specific Application	Process for industrial
Variant	Standard version With braking chopper
Phase	3 phase
Mounting Mode	Wall mount
Communication port protocol	Modbus TCP EtherNet/IP Modbus serial
[Us] rated supply voltage	200...240 V - 15...10 %
Motor power kW	45.0 KW normal duty 37.0 kW heavy duty
Maximum Horse Power Rating	60.0 Hp normal duty 50.0 hp heavy duty
Continuous output current	176 A 2.5 kHz normal duty 149 A 2.5 kHz heavy duty
EMC filter	Integrated With EMC plate option
IP degree of protection	IP21
Degree of protection	UL type 1
Option module	Slot A communication module Profibus DP V1 Slot A communication module PROFINET Slot A communication module DeviceNet Slot A communication module EtherCAT Slot A communication module CANopen daisy chain RJ45 Slot A communication module CANopen SUB-D 9 Slot A communication module CANopen screw terminals Slot A/slot B/slot C digital and analog I/O extension module Slot A/slot B/slot C output relay extension module Slot B 5/12 V digital encoder interface module Slot B analog encoder interface module Slot B resolver encoder interface module Communication module Ethernet Powerlink
Discrete input logic	16 preset speeds
Asynchronous motor control profile	Variable torque standard Optimized torque mode Constant torque standard
Synchronous motor control profile	Permanent magnet motor Synchronous reluctance motor
Maximum output frequency	599 Hz
Switching frequency	1...8 kHz adjustable 2.5...8 kHz with derating factor
Nominal switching frequency	2.5 kHz
Line current	155.1 A 200 V normal duty) 128.5 A 200 V heavy duty) 130.4 A 240 V normal duty) 108.5 A 240 V heavy duty)
Apparent power	54.2 KVA 240 V normal duty) 45.1 kVA 240 V heavy duty)
Maximum transient current	211.2 A 60 s normal duty) 223.5 A 60 s heavy duty)

Network Frequency	50-60 Hz
Prospective line Isc	50 kA

Complementary

Discrete input number	10
Discrete input type	DI1...DI8 programmable, 24 V DC <= 30 V)3.5 kOhm DI7, DI8 programmable as pulse input 0…30 kHz, 24 V DC <= 30 V) STOA, STOB safe torque off, 24 V DC <= 30 V)> 2.2 kOhm
Discrete output number	2
Discrete output type	Logic output DQ+ 0…1 kHz <= 30 V DC 100 mA Programmable as pulse output DQ+ 0…30 kHz <= 30 V DC 20 mA Logic output DQ- 0…1 kHz <= 30 V DC 100 mA
Analogue input number	3
Analogue input type	AI1, AI2, AI3 software-configurable voltage 0...10 V DC 30 kOhm 12 bits AI1, AI2, AI3 software-configurable current 0...20 mA/4...20 mA 250 Ohm 12 bits
Analogue output number	2
Analogue output type	Software-configurable voltage AQ1, AQ2 0...10 V DC 470 Ohm 10 bits Software-configurable current AQ1, AQ2 0...20 mA 500 Ohm 10 bits
Relay output number	3
Relay output type	Configurable relay logic R1 fault relay NO/NC 100000 cycles Configurable relay logic R2 sequence relay NO 1000000 cycles Configurable relay logic R3 sequence relay NO 1000000 cycles
Maximum switching current	Relay output R1 resistive, cos phi = 1 3 A 250 V AC Relay output R1 resistive, cos phi = 1 3 A 30 V DC Relay output R1 inductive, cos phi = 0.4 7 ms 2 A 250 V AC Relay output R1 inductive, cos phi = 0.4 7 ms 2 A 30 V DC Relay output R2, R3 resistive, cos phi = 1 5 A 250 V AC Relay output R2, R3 resistive, cos phi = 1 5 A 30 V DC Relay output R2, R3 inductive, cos phi = 0.4 7 ms 2 A 250 V AC Relay output R2, R3 inductive, cos phi = 0.4 7 ms 2 A 30 V DC
Minimum switching current	Relay output R1, R2, R3 5 mA 24 V DC
Physical interface	Ethernet 2-wire RS 485
Connector Type	2 RJ45 1 RJ45
Method of access	Slave Modbus TCP
Transmission Rate	10, 100 Mbits 4.8 kbps 9600 bit/s 19200 bit/s
Transmission frame	RTU
Number of addresses	1…247
Data format	8 bits, configurable odd, even or no parity
Type of polarization	No impedance
4 quadrant operation possible	True
Acceleration and deceleration ramps	Linear adjustable separately from 0.01...9999 s
Motor slip compensation	Can be suppressed Not available in permanent magnet motor law Automatic whatever the load Adjustable
Braking to standstill	By DC injection
Brake chopper integrated	True
Maximum Input Current per Phase	155.1 A
Maximum output voltage	240.0 V
Relative symmetric network frequency tolerance	5 %
Base load current at high overload	149.0 A
Base load current at low overload	176.0 A
Power dissipation in W	Natural convection 175 W 200 V 2.5 kHz Forced convection 1367 W 200 V 2.5 kHz
With safety function Safely Limited Speed (SLS)	True
With safety function Safe brake management (SBC/ SBT)	True
With safety function Safe Operating Stop (SOS)	False

With safety function Safe Position (SP)	False
With safety function Safe programmable logic	False
With safety function Safe Speed Monitor (SSM)	False
With safety function Safe Stop 1 (SS1)	True
With sft fct Safe Stop 2 (SS2)	False
With safety function Safe torque off (STO)	True
With safety function Safely Limited Position (SLP)	False
With safety function Safe Direction (SDI)	False
Protection type	Thermal protection motor Safe torque off motor Motor phase break motor Thermal protection drive Safe torque off drive Overheating drive Overcurrent between output phases and earth drive Overload of output voltage drive Short-circuit protection drive Motor phase break drive Overvoltages on the DC bus drive Line supply overvoltage drive Line supply undervoltage drive Line supply phase loss drive Overspeed drive Break on the control circuit drive
Quantity per Set	1
Width	11.42 in (290 mm)
Height	36.30 in (922 mm)
Depth	12.81 in (325.5 mm)
Net Weight	126.99 lb(US) (57.6 kg)
Electrical connection	Control screw terminal 0.5...1.5 mm² AWG 20...AWG 16 Line side screw terminal 120 mm² AWG 4/0...250 kcmil Motor screw terminal 120 mm² 250 kcmil DC bus screw terminal 120 mm² AWG 4/0...250 kcmil
Transmission Rate	10/100 Mbit/s Ethernet IP/Modbus TCP 4.8, 9.6, 19.2, 38.4 kbit/s Modbus serial
Exchange mode	Half duplex, full duplex, autonegotiation Ethernet IP/Modbus TCP
Data format	8 bits, configurable odd, even or no parity Modbus serial
Type of polarization	No impedance Modbus serial
Number of addresses	1…247 Modbus serial
Supply	External supply for digital inputs 24 V DC 19…30 V), <1.25 mA overload and short-circuit protection Internal supply for reference potentiometer (1 to 10 kOhm) 10.5 V DC +/- 5 %, <10 mA overload and short-circuit protection Internal supply for digital inputs and STO 24 V DC 21…27 V), <200 mA overload and short-circuit protection
Local signalling	Local diagnostic 3 LED mono/dual colour) Embedded communication status 5 LED dual colour) Communication module status 2 LED dual colour) Presence of voltage 1 LED red)
Input compatibility	DI1...DI8 discrete input level 1 PLC EN/IEC 61131-2 DI7, DI8 pulse input level 1 PLC IEC 65A-68 STOA, STOB discrete input level 1 PLC EN/IEC 61131-2
Discrete input logic	Positive logic (source) DI1...DI8), < 5 V, > 11 V Negative logic (sink) DI1...DI8), > 16 V, < 10 V Positive logic (source) DI7, DI8), < 0.6 V, > 2.5 V Positive logic (source) STOA, STOB), < 5 V, > 11 V
Sampling duration	2 Ms +/- 0.5 ms DI1...DI8) - discrete input 5 Ms +/- 1 ms DI7, DI8) - pulse input 1 Ms +/- 1 ms AI1, AI2, AI3) - analog input 5 ms +/- 1 ms AQ1, AQ2) - analog output
Accuracy	+/- 0.6 % AI1, AI2, AI3 for a temperature variation 60 °C analog input +/- 1 % AQ1, AQ2 for a temperature variation 60 °C analog output
Linearity error	AI1, AI2, AI3 +/- 0.15 % of maximum value analog input AQ1, AQ2 +/- 0.2 % analog output
Refresh time	Relay output R1, R2, R3)5 ms +/- 0.5 ms)
Isolation	Between power and control terminals

Environment

Operating altitude	<= 3280.84 ft (1000 m) without derating 1000...4800 m with current derating 1 % per 100 m
Operating position	Vertical +/- 10 degree
Product Certifications	UL TÜV CSA
Marking	CE
Standards	UL 508C EN/IEC 61800-3 EN/IEC 61800-5-1 IEC 61000-3-12 IEC 60721-3 IEC 61508 IEC 13849-1
Maximum THDI	<48 % from 80...100 % of load IEC 61000-3-12
Assembly style	Enclosed
Electromagnetic compatibility	Electrostatic discharge immunity test level 3 IEC 61000-4-2 Radiated radio-frequency electromagnetic field immunity test level 3 IEC 61000-4-3 Electrical fast transient/burst immunity test level 4 IEC 61000-4-4 1.2/50 µs - 8/20 µs surge immunity test level 3 IEC 61000-4-5 Conducted radio-frequency immunity test level 3 IEC 61000-4-6
Environmental class (during operation)	Class 3C3 according to IEC 60721-3-3 Class 3S3 according to IEC 60721-3-3
Maximum acceleration under shock impact (during operation)	150 m/s² at 11 ms
Maximum acceleration under vibrational stress (during operation)	10 m/s² at 13...200 Hz
Maximum deflection under vibratory load (during operation)	1.5 mm at 2...13 Hz
Permitted relative humidity (during operation)	Class 3K5 according to EN 60721-3
Volume of cooling air	77932.15 Gal/hr(US) (295 m3/h)
Overvoltage category	III
Regulation loop	Adjustable PID regulator
Insulation resistance	> 1 MOhm 500 V DC for 1 minute to earth
Noise level	68.3 dB 86/188/EEC
Vibration resistance	1.5 mm peak to peak 2…13 Hz)IEC 60068-2-6 1 gn 13…200 Hz)IEC 60068-2-6
Shock resistance	15 gn 11 ms IEC 60068-2-27
Environmental characteristic	Chemical pollution resistance class 3C3 EN/IEC 60721-3-3 Dust pollution resistance class 3S3 EN/IEC 60721-3-3
Relative humidity	5…95 % without condensation IEC 60068-2-3
Ambient air temperature for operation	5…122 °F (-15…50 °C) without derating) 122…140 °F (50…60 °C) with derating factor)
Noise level	68.3 dB
Pollution degree	2
Ambient air transport temperature	-40…158 °F (-40…70 °C)
Ambient Air Temperature for Storage	-40…158 °F (-40…70 °C)

Ordering and shipping details

Category	22277-ATV930 FRAMES 3 & 4
Discount Schedule	CP4E
GTIN	3606480883675
Nbr. of units in pkg.	1
Package weight(Lbs)	134.92 lb(US) (61.2 kg)
Returnability	No
Country of origin	IN

Packing Units

Unit Type of Package 1	PCE
Package 1 Height	23.23 in (59 cm)
Package 1 width	18.11 in (46 cm)
Package 1 Length	45.08 in (114.5 cm)
Unit Type of Package 2	PAL
Number of Units in Package 2	1
Package 2 Weight	134.92 lb(US) (61.2 kg)
Package 2 Height	23.23 in (59 cm)
Package 2 width	18.11 in (46 cm)
Package 2 Length	45.08 in (114.5 cm)

Offer Sustainability

Sustainable offer status	Green Premium product
California proposition 65	WARNING: This product can expose you to chemicals including: Lead and lead compounds, which is known to the State of California to cause cancer and birth defects or other reproductive harm. For more information go to www.P65Warnings.ca.gov
REACh Regulation	REACh Declaration
EU RoHS Directive	Pro-active compliance (Product out of EU RoHS legal scope) EU RoHS Declaration
Mercury free	Yes
RoHS exemption information	Yes
China RoHS Regulation	China RoHS Declaration
Environmental Disclosure	Product Environmental Profile
Circularity Profile	End Of Life Information
WEEE	The product must be disposed on European Union markets following specific waste collection and never end up in rubbish bins.
Upgradeability	Upgraded Components Available

Dimensions

IP21 / UL Type 1 Drives - Front and Left Side View

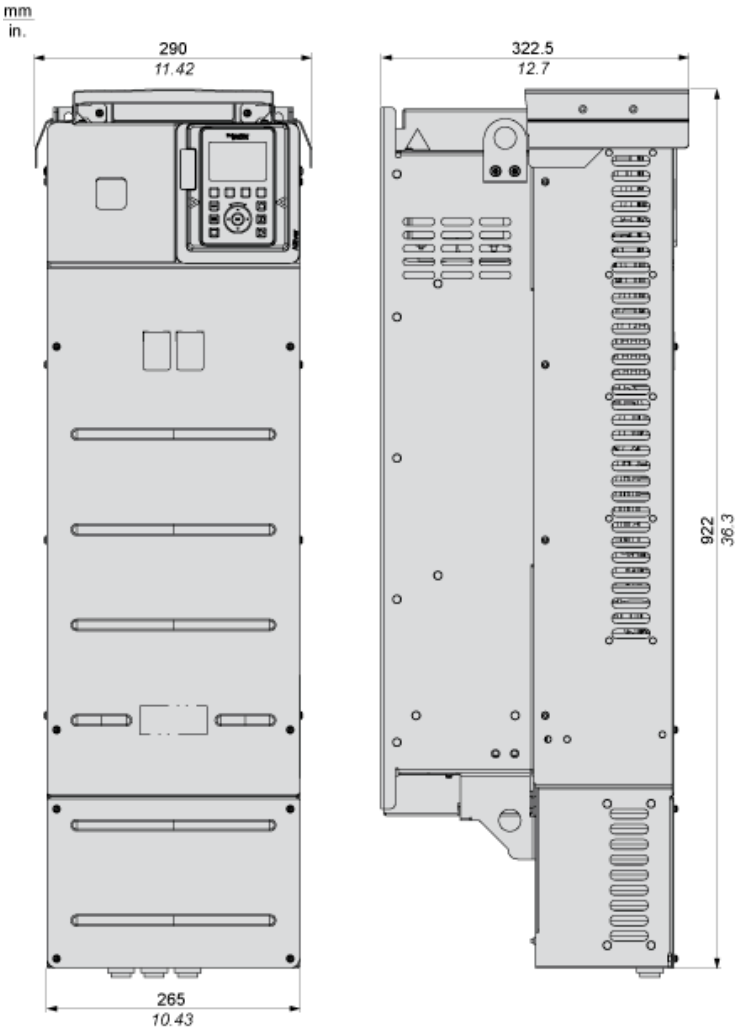

Drives without IP21 Top Cover - Rear View

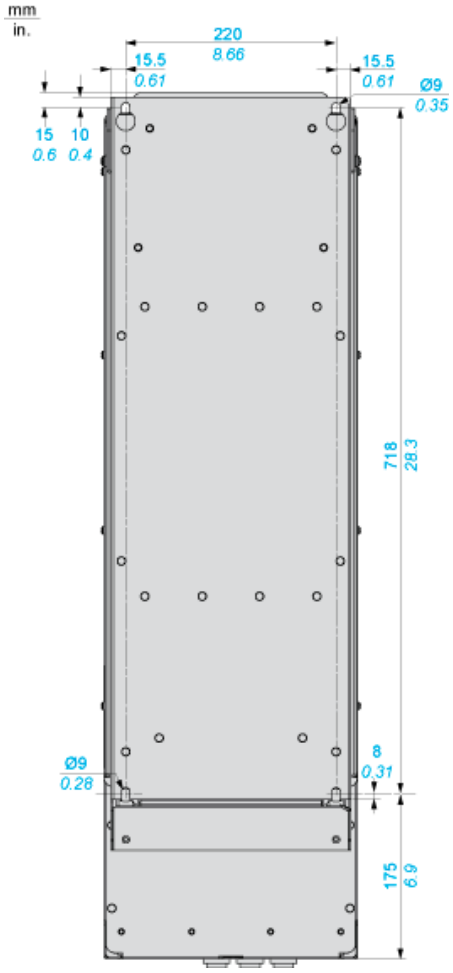

Clearances

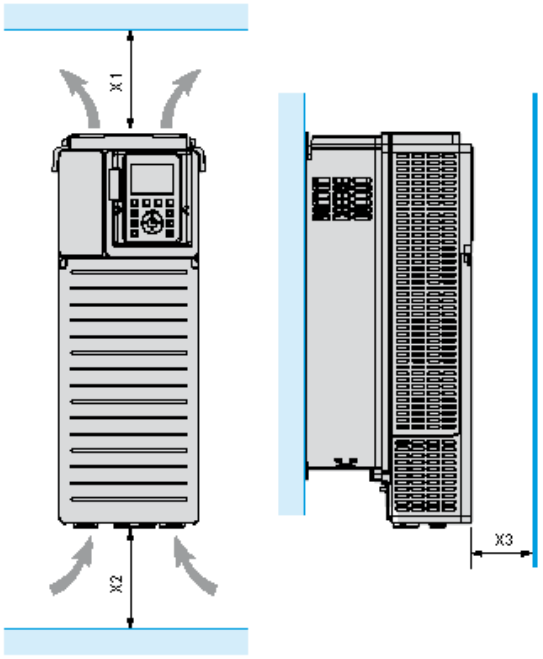

X1	X2	X3
≥ 100 mm (3.94 in.)	≥ 100 mm (3.94 in.)	≥ 10 mm (0.39 in.)

- Mount the device in a vertical position (±10°). This is required for cooling the device.
- Do not mount the device close to heat sources.
- Leave sufficient free space so that the air required for cooling purposes can circulate from the bottom to the top of the drive.

Mounting Types

Mounting Type A: Individual IP21

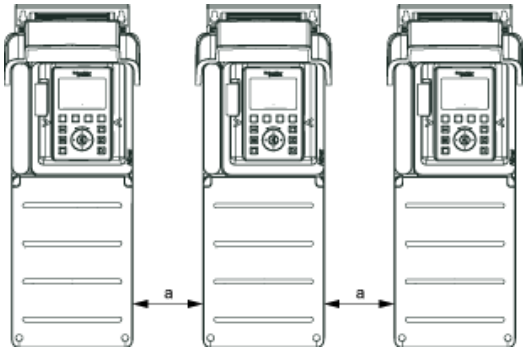

a ≥ = 110 mm (4.33 in.)

Mounting Type B: Side by Side IP20 (Possible, 2 Drives Only)

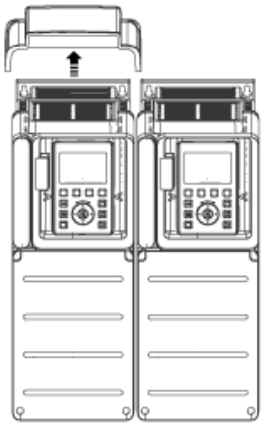

Mounting Type C: Individual IP20

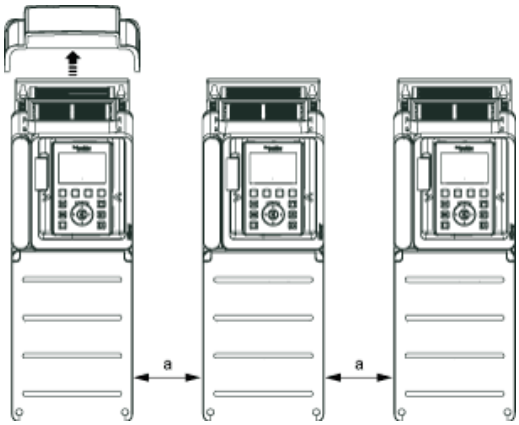

a ≥ = 110 mm (4.33 in.)