Product data sheet

Specifications



servo motor BCH, Lexium 28, 100mm, 1000W, 2.45kg.cm², with oil seal, with key, brake, straight connection

BCH2LH1033CF6C

Product availability: Non-Stock - Not normally stocked in distribution facility

Main

Range Compatibility	Lexium 28
Device short name	BCH2
Product or Component Type	Servo motor

Complementary

Maximum mechanical speed	5000 rpm
[Us] rated supply voltage	220 V
Phase	Single phase Three phase
Continuous stall current	5.83 A
Continuous stall torque	28.15 lbf.in (3.18 N.m) LXM26D 7 A, 220 V, single phase 28.15 lbf.in (3.18 N.m) LXM26D 7 A, 220 V, three phase 28.15 lbf.in (3.18 N.m) LXM28 7 A, 220 V, single phase 28.15 lbf.in (3.18 N.m) LXM28 7 A, 220 V, three phase
Continuous power	1000 W
Peak stall torque	84.44 lbf.in (9.54 N.m) LXM26D 7 A, 220 V, single phase 84.44 lbf.in (9.54 N.m) LXM26D 7 A, 220 V, three phase 84.44 lbf.in (9.54 N.m) LXM28... 7 A, 220 V, single phase 84.44 lbf.in (9.54 N.m) LXM28... 7 A, 220 V, three phase
Nominal output power	1000 W LXM26D 7 A, 220 V, single phase 1000 W LXM26D 7 A, 220 V, three phase 1000 W LXM28... 7 A, 220 V, single phase 1000 W LXM28... 7 A, 220 V, three phase
Nominal torque	28.15 lbf.in (3.18 N.m) LXM26D 7 A, 220 V, single phase 28.15 lbf.in (3.18 N.m) LXM26D 7 A, 220 V, three phase 28.15 lbf.in (3.18 N.m) LXM28... 7 A, 220 V, single phase 28.15 lbf.in (3.18 N.m) LXM28... 7 A, 220 V, three phase
Nominal speed	3000 rpm LXM26D 7 A, 220 V, single phase 3000 rpm LXM26D 7 A, 220 V, three phase 3000 rpm LXM28... 7 A, 220 V, single phase 3000 rpm LXM28... 7 A, 220 V, three phase
Maximum current Irms	18.9 A LXM28... 1 kW, 220 V
Maximum permanent current	6.64 A
Product compatibility	LXM26D servo drive 1 kW, 220 V, single phase LXM26D servo drive 1 kW, 220 V, three phase LXM28... servo drive 1 kW, 220 V, single phase LXM28... servo drive 1 kW, 220 V, three phase
Shaft end	Keyed
Shaft diameter	0.9 in (22 mm)

Price is “List Price” and may be subject to a trade discount – check with your local distributor or retailer for actual price.

Disclaimer: This documentation is not intended as a substitute for and is not to be used for determining suitability or reliability of these products for specific user applications

Shaft length	1.8 in (45 mm)
key width	0.3 in (8 mm)
Feedback type	20 bits single turn absolute encoder
Holding brake	With
Holding torque	57.5 lbf.in (6.5 N.m) built-in
Mounting Support	Asian standard flange
Motor flange size	3.9 in (100 mm)
Electrical connection	Connector MIL
Torque constant	0.55 N.m/A 68 °F (20 °C)
Back emf constant	33 V/krpm 68 °F (20 °C)
Number of motor poles	5.0
Rotor inertia	2.45 kg.cm²
Stator resistance	0.67 Ohm 68 °F (20 °C)
Stator inductance	4.2 mH 68 °F (20 °C)
Stator electrical time constant	6.27 ms 68 °F (20 °C)
Maximum radial force Fr	570 N 3000 rpm
Maximum axial force Fa	200 N
Brake pull-in power	10.4 W
type of cooling	Natural convection
Length	7.1 in (180.5 mm)
Number of motor stacks	1
Centring collar diameter	3.7 in (95 mm)
centring collar depth	0.3 in (7 mm)
Number of mounting holes	4
Mounting holes diameter	0.4 in (9.2 mm)
Circle diameter of the mounting holes	4.5 in (115 mm)
Distance shaft shoulder-flange	0.3 in (7 mm)
Net Weight	11.2 lb(US) (5.1 kg)
Sizing reference	BCH2
Network number of phases	1
Accuracy error [angular]	0.044 °
Coefficient 1_1	-0.0000187500000003 N.m/rpm
Coefficient 1_2	0.000000000000000000562440546 N.m/rpm²
Coefficient 1_3	-0.000000000000000000000002965143 N.m/rpm3
Coefficient 1_4	0.000000000000000000000000711 N.m/rpm4
Coefficient 1_5	-0.000000000000000000000000000078919 N.m/rpm5
Coefficient 1_6	0.000000000000000000000000000000032 N.m/rpm6
Saturation coefficient 1	-0.000000000000000038243890773
Saturation coefficient 2	-0.0078140960163432
Saturation coefficient 3	0.000000000000000000158151428

Coefficient 2_0	0.0000000000 lbf.in (0 N.m)
Coefficient 2_1	0.00000875000000000026 N.m/rpm
Temperature copper hot	275 °F (135 °C)
Temperature magnet hot	212 °F (100 °C)
Temperature magnet rt	68 °F (20 °C)
Motor voltage drop coefficient	1

Environment

IP Degree of Protection	IP50 IM V3 IP65 IM B5, IM V1
Ambient air temperature for operation	32…104 °F (0…40 °C)

Ordering and shipping details

Category	US1PC5318281
Discount Schedule	PC53
GTIN	3606480734038
Returnability	No
Country of origin	CN

Packing Units

Unit Type of Package 1	PCE
Number of Units in Package 1	1
Package 1 Height	7.20 in (18.3 cm)
Package 1 Width	8.94 in (22.7 cm)
Package 1 Length	14.06 in (35.7 cm)
Package 1 Weight	13.4 lb(US) (6.1 kg)
Unit Type of Package 2	S06
Number of Units in Package 2	9
Package 2 Height	31.50 in (80 cm)
Package 2 Width	23.62 in (60 cm)
Package 2 Length	28.35 in (72 cm)
Package 2 Weight	145.3 lb(US) (65.9 kg)

Environmental Data

Schneider Electric aims to achieve Net Zero status by 2050 through supply chain partnerships, lower impact materials, and circularity via our ongoing “Use Better, Use Longer, Use Again” campaign to extend product lifetimes and recyclability.

Environmental Data explained >

How we assess product sustainability >

Environmental footprint

Carbon footprint (kg CO2 eq, Total Life cycle)	4076
Environmental Disclosure	Product Environmental Profile

Use Better

Materials and Substances

EU RoHS Directive	Pro-active compliance (Product out of EU RoHS legal scope)
REACh Regulation	REACh Declaration
China RoHS Regulation	China RoHS declaration
California proposition 65	WARNING: This product can expose you to chemicals including: Lead and lead compounds, which is known to the State of California to cause cancer and birth defects or other reproductive harm. For more information go to www.P65Warnings.ca.gov
PVC free	Yes

Use Again

Repack and remanufacture

Circularity Profile	End of Life Information
Take-back	No

Dimensions Drawings

Dimensions

Dimensions of Motor

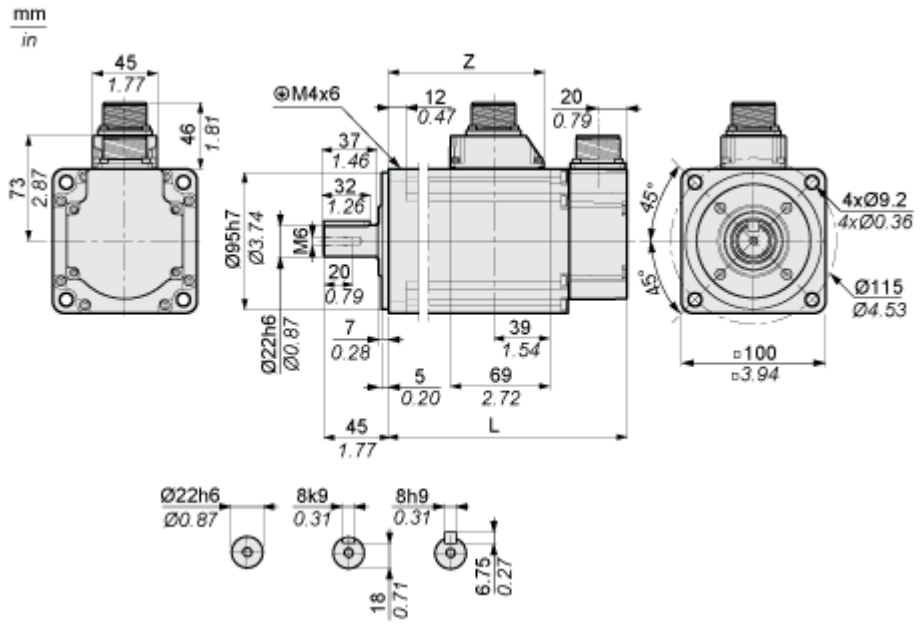

	mm	in.
L (without holding brake)	153.5	6.04
L (with holding brake)	180.5	7.11
Z	96	3.78

Performance Curves

Torque/Speed Curves with 230 V Single/Three Phase Supply Voltage

Servo Motor with LXM28AU10●●● Servo Drive

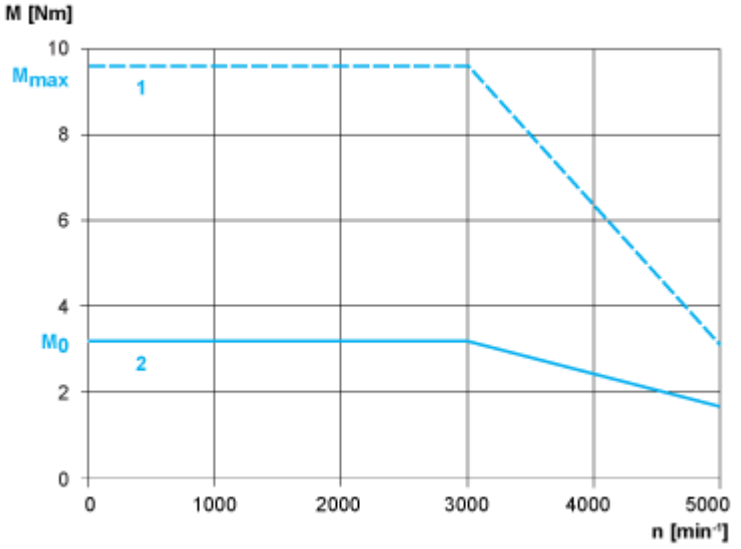

1 : Peak torque

2 : Continuous torque