Product data sheet

Specifications



servo motor BCH, Lexium 28, 130mm, 900W, 9.7kg.cm², with oil seal, smooth, straight connection

BCH2MM0912CA6C

Product availability: Non-Stock - Not normally stocked in distribution facility

Main

Range Compatibility	Lexium 28
Device short name	BCH2
Product or Component Type	Servo motor

Complementary

Maximum mechanical speed	3000 rpm
[Us] rated supply voltage	220 V
Phase	Three phase Single phase
Continuous stall current	5.64 A
Continuous stall torque	76.03 lbf.in (8.59 N.m) LXM28 7 A, 220 V, single phase 76.03 lbf.in (8.59 N.m) LXM28 7 A, 220 V, three phase
Continuous power	900 W
Peak stall torque	228.08 lbf.in (25.77 N.m) LXM28... 7 A, 220 V, single phase 228.08 lbf.in (25.77 N.m) LXM28... 7 A, 220 V, three phase
Nominal output power	900 W LXM28... 7 A, 220 V, single phase 900 W LXM28... 7 A, 220 V, three phase
Nominal torque	76.03 lbf.in (8.59 N.m) LXM28... 7 A, 220 V, single phase 76.03 lbf.in (8.59 N.m) LXM28... 7 A, 220 V, three phase
Nominal speed	1000 rpm LXM28... 7 A, 220 V, single phase 1000 rpm LXM28... 7 A, 220 V, three phase
Maximum current Irms	19.81 A LXM28... 0.9 kW, 220 V
Maximum permanent current	6.15 A
Product compatibility	LXM28... servo drive 0.9 kW, 220 V, single phase LXM28... servo drive 0.9 kW, 220 V, three phase
Shaft end	Smooth shaft
Shaft diameter	0.9 in (22 mm)
Shaft length	2.2 in (55 mm)
Feedback type	20 bits single turn absolute encoder
Holding brake	Without
Mounting Support	Asian standard flange
Motor flange size	5.1 in (130 mm)
Electrical connection	Connector MIL
Torque constant	1.52 N.m/A 68 °F (20 °C)
Back emf constant	92 V/krpm 68 °F (20 °C)

Price is “List Price” and may be subject to a trade discount – check with your local distributor or retailer for actual price.

Disclaimer: This documentation is not intended as a substitute for and is not to be used for determining suitability or reliability of these products for specific user applications

Number of motor poles	5.0
Rotor inertia	9.7 kg.cm²
Stator resistance	1.19 Ohm 68 °F (20 °C)
Stator inductance	14.9 mH 68 °F (20 °C)
Stator electrical time constant	12.52 ms 68 °F (20 °C)
Maximum radial force Fr	670 N 1000 rpm
Maximum axial force Fa	200 N
Brake pull-in power	19.7 W
type of cooling	Natural convection
Length	6.4 in (163 mm)
Number of motor stacks	2
Centring collar diameter	4.3 in (110 mm)
centring collar depth	0.3 in (8 mm)
Number of mounting holes	4
Mounting holes diameter	0.4 in (9.2 mm)
Circle diameter of the mounting holes	5.7 in (145 mm)
Distance shaft shoulder-flange	0.3 in (8 mm)
Net Weight	16.8 lb(US) (7.6 kg)
Sizing reference	BCH2
Network number of phases	1
Accuracy error [angular]	0.044 °
Coefficient 1_1	-0.0000187500000003 N.m/rpm
Coefficient 1_2	0.000000000000000000562440546 N.m/rpm²
Coefficient 1_3	-0.000000000000000000002965143 N.m/rpm3
Coefficient 1_4	0.000000000000000000000000711 N.m/rpm4
Coefficient 1_5	-0.000000000000000000000000000078919 N.m/rpm5
Coefficient 1_6	0.000000000000000000000000000000032 N.m/rpm6
Saturation coefficient 1	-0.000000000000000038243890773
Saturation coefficient 2	-0.0078140960163432
Saturation coefficient 3	0.000000000000000000158151428
Coefficient 2_0	0.0000000000 lbf.in (0 N.m)
Coefficient 2_1	0.00000875000000000026 N.m/rpm
Temperature copper hot	275 °F (135 °C)
Temperature magnet hot	212 °F (100 °C)
Temperature magnet rt	68 °F (20 °C)
Motor voltage drop coefficient	1

Environment

IP Degree of Protection	IP50 IM V3 IP65 IM B5, IM V1
Ambient air temperature for operation	-4…104 °F (-20…40 °C)

Ordering and shipping details

Category	US1PC5318281
Discount Schedule	PC53
GTIN	3606480734649
Returnability	No
Country of origin	CN

Packing Units

Unit Type of Package 1	PCE
Number of Units in Package 1	1
Package 1 Height	7.13 in (18.1 cm)
Package 1 Width	9.06 in (23.0 cm)
Package 1 Length	14.17 in (36.0 cm)
Package 1 Weight	18.85 lb(US) (8.55 kg)

Environmental Data

Schneider Electric aims to achieve Net Zero status by 2050 through supply chain partnerships, lower impact materials, and circularity via our ongoing “Use Better, Use Longer, Use Again” campaign to extend product lifetimes and recyclability.

Environmental Data explained >

How we assess product sustainability >

Environmental footprint

Carbon footprint (kg CO2 eq, Total Life cycle)	4269
Environmental Disclosure	Product Environmental Profile

Use Better

Materials and Substances

EU RoHS Directive	Pro-active compliance (Product out of EU RoHS legal scope)
REACh Regulation	REACh Declaration
China RoHS Regulation	China RoHS declaration
California proposition 65	WARNING: This product can expose you to chemicals including: Lead and lead compounds, which is known to the State of California to cause cancer and birth defects or other reproductive harm. For more information go to www.P65Warnings.ca.gov

Use Again

Repack and remanufacture

Circularity Profile	End of Life Information
Take-back	No

Dimensions Drawings

Dimensions

Dimensions of Motor

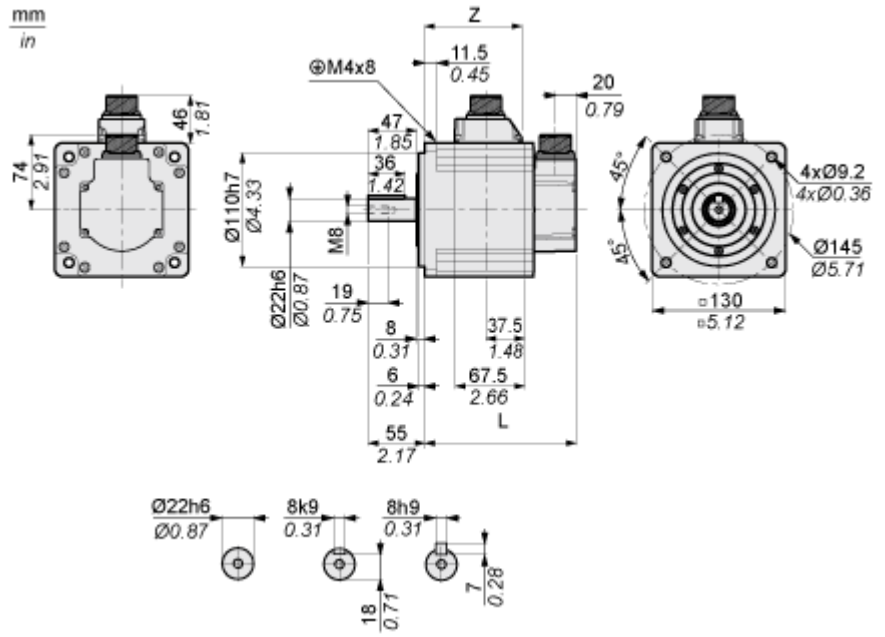

	mm	in.
L (without holding brake)	163	6.42
L (with holding brake)	198	7.8
Z	110.5	4.35

Performance Curves

Torque/Speed Curves with 230 V Single/Three Phase Supply Voltage

Servo Motor with LXM28AU10●●● Servo Drive

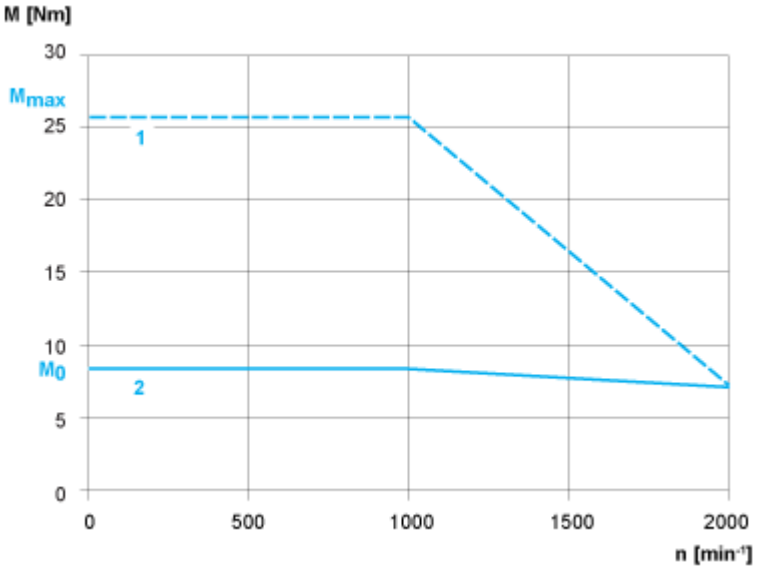

1 : Peak torque

2 : Continuous torque