Product data sheet

Specifications



servo motor BMH, Lexium 32, 1.2Nm, 8000rpm, keyed shaft, with brake, IP54, 16 multiturn encoder

BMH0701P17F2A

Product availability: Non-Stock - Not normally stocked in distribution facility

Main

Device short name	BMH
Product or Component Type	Servo motor
Maximum mechanical speed	8000 rpm
Continuous stall torque	10.6 lbf.in (1.2 N.m) LXM32.U60N4 1.5 A, 400 V, three phase 10.6 lbf.in (1.2 N.m) LXM32.U60N4 1.5 A, 480 V, three phase 12.4 lbf.in (1.4 N.m) LXM32.D12N4 3 A, 400 V, three phase 12.4 lbf.in (1.4 N.m) LXM32.D12N4 3 A, 480 V, three phase
Peak stall torque	37.2 lbf.in (4.2 N.m) LXM32.U60N4 1.5 A, 400 V, three phase 37.2 lbf.in (4.2 N.m) LXM32.U60N4 1.5 A, 480 V, three phase 37.2 lbf.in (4.2 N.m) LXM32.D12N4 3 A, 400 V, three phase 37.2 lbf.in (4.2 N.m) LXM32.D12N4 3 A, 480 V, three phase
Nominal output power	350 W LXM32.U60N4 1.5 A, 400 V, three phase 350 W LXM32.U60N4 1.5 A, 480 V, three phase 700 W LXM32.D12N4 3 A, 400 V, three phase 700 W LXM32.D12N4 3 A, 480 V, three phase
Nominal torque	9.7 lbf.in (1.1 N.m) LXM32.U60N4 1.5 A, 400 V, three phase 9.7 lbf.in (1.1 N.m) LXM32.U60N4 1.5 A, 480 V, three phase 11.5 lbf.in (1.3 N.m) LXM32.D12N4 3 A, 400 V, three phase 11.5 lbf.in (1.3 N.m) LXM32.D12N4 3 A, 480 V, three phase
Nominal speed	3000 rpm LXM32.U60N4 1.5 A, 400 V, three phase 3000 rpm LXM32.U60N4 1.5 A, 480 V, three phase 5000 rpm LXM32.D12N4 3 A, 400 V, three phase 5000 rpm LXM32.D12N4 3 A, 480 V, three phase
Product compatibility	LXM32.U60N4 400...480 V three phase LXM32.D12N4 400...480 V three phase
Shaft end	Keyed
IP Degree of Protection	IP54 standard
Speed feedback resolution	32768 points/turn x 4096 turns
Holding brake	With
Mounting Support	International standard flange
Electrical Connection	Rotatable right-angled connectors

Complementary

Range Compatibility	Lexium 32
[Us] rated supply voltage	480 V
Phase	Three phase
Continuous stall current	1.78 A
Continuous power	1.05 W

Price is “List Price” and may be subject to a trade discount – check with your local distributor or retailer for actual price.

Disclaimer: This documentation is not intended as a substitute for and is not to be used for determining suitability or reliability of these products for specific user applications

Maximum current Irms	6 A LXM32.U60N4 6 A LXM32.D12N4
Maximum permanent current	5.97 A
Second shaft	Without second shaft end
Shaft diameter	0.4 in (11 mm)
Shaft length	0.9 in (23 mm)
key width	0.7 in (18 mm)
Feedback type	Multiturn SinCos Hiperface
Holding torque	26.6 lbf.in (3 N.m) holding brake
Motor flange size	2.8 in (70 mm)
Number of motor stacks	1
Torque constant	0.79 N.m/A 248 °F (120 °C)
Back emf constant	50.72 V/krpm 248 °F (120 °C)
Number of motor poles	10
Rotor inertia	0.7 kg.cm²
Stator resistance	8.3 Ohm 68 °F (20 °C)
Stator inductance	23.4 mH 68 °F (20 °C)
Stator electrical time constant	2.8 ms 68 °F (20 °C)
Maximum radial force Fr	660 N 1000 rpm 520 N 2000 rpm 460 N 3000 rpm 410 N 4000 rpm 380 N 5000 rpm 360 N 6000 rpm
Maximum axial force Fa	0.2 x Fr
Brake pull-in power	7 W
type of cooling	Natural convection
Length	6.3 in (161 mm)
Centring collar diameter	2.4 in (60 mm)
centring collar depth	0.10 in (2.5 mm)
Number of mounting holes	4
Mounting holes diameter	0.2 in (5.5 mm)
Circle diameter of the mounting holes	3.2 in (82 mm)
Net Weight	5.7 lb(US) (2.6 kg)

Ordering and shipping details

Category	US1PC5318282
Discount Schedule	PC53
GTIN	3606485193496
Returnability	Yes
Country of origin	US

Packing Units

Unit Type of Package 1	PCE

Number of Units in Package 1	1
Package 1 Height	4.45 in (11.300 cm)
Package 1 Width	7.64 in (19.400 cm)
Package 1 Length	15.67 in (39.800 cm)
Package 1 Weight	5.767 lb(US) (2.616 kg)

Contractual warranty

Warranty	18 months

Environmental Data

Schneider Electric aims to achieve Net Zero status by 2050 through supply chain partnerships, lower impact materials, and circularity via our ongoing “Use Better, Use Longer, Use Again” campaign to extend product lifetimes and recyclability.

Environmental Data explained >

How we assess product sustainability >

Environmental footprint

Carbon footprint (kg CO2 eq, Total Life cycle)	785
Environmental Disclosure	Product Environmental Profile

Use Better

Materials and Substances

EU RoHS Directive	Pro-active compliance (Product out of EU RoHS legal scope)
REACh Regulation	REACh Declaration
California proposition 65	WARNING: This product can expose you to chemicals including: Lead and lead compounds, which is known to the State of California to cause cancer and birth defects or other reproductive harm. For more information go to www.P65Warnings.ca.gov
PVC free	Yes

Use Again

Repack and remanufacture

Circularity Profile	No need of specific recycling operations
WEEE	The product must be disposed on European Union markets following specific waste collection and never end up in rubbish bins.
Take-back	No

Dimensions Drawings

Servo Motors Dimensions

Example with Straight Connectors

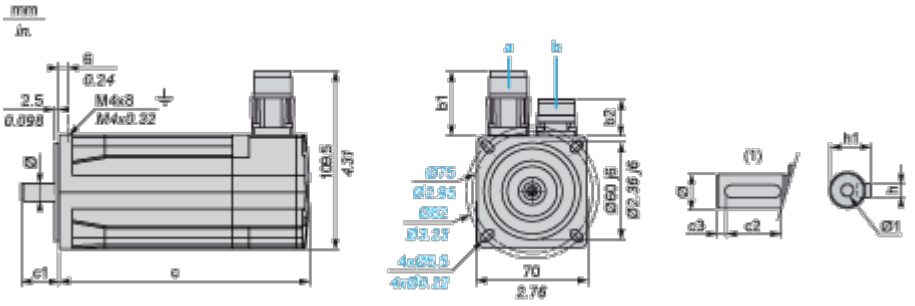

a: Power supply for servo motor brake

b: Power supply for servo motor encoder

(1) Shaft end, keyed slot (optional)

Dimensions in mm

Straight connectors		Rotatable angled connectors		c (without brake)	c (with brake)	c1	c2	c3	h	h1	Ø	Ø1 for screws
b1	b2	b1	b2									
39.5	25.5	39.5	39.5	122	161	23	18	2.5	4 h9	$12.5^{+0}_{-0.13}$	11 k6	M4 x 14

Dimensions in in.

Straight connectors		Rotatable angled connectors		c (without brake)	c (with brake)	c1	c2	c3	h	h1	Ø	Ø1 for screws
b1	b2	b1	b2									
1.55	1	1.55	1.55	4.80	6.33	0.90	0.70	0.09	0.16 h9	$0.49^{+0}_{-0.0051}$	0.43 k6	M4 x 0.55

Performance Curves

400 V 3-Phase Supply Voltage

Torque/Speed Curves

Servo motor with LXM32•U60N4 servo drive

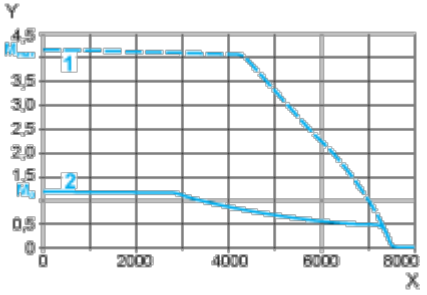

X Speed in rpm

Y Torque in Nm

1 Peak torque

2 Continuous torque

Servo motor with LXM32•D12N4 servo drive

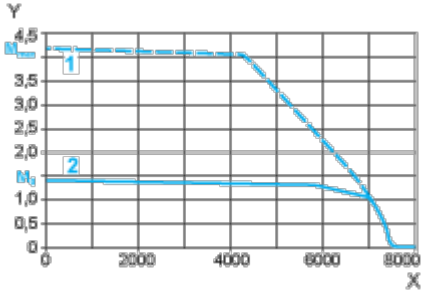

X Speed in rpm

Y Torque in Nm

1 Peak torque

2 Continuous torque

480 V 3-Phase Supply Voltage

Torque/Speed Curves

Servo motor with LXM32•U60N4 servo drive

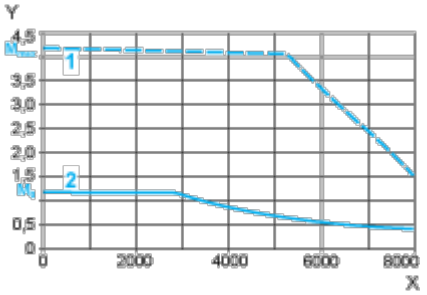

X Speed in rpm

Y Torque in Nm

1 Peak torque

2 Continuous torque

Servo motor with LXM32•D12N4 servo drive

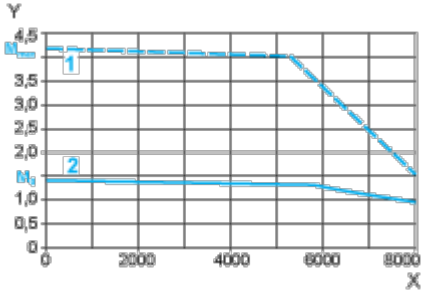

X Speed in rpm

Y Torque in Nm

1 Peak torque

2 Continuous torque