Product data sheet

Specifications



servo motor BMH, Lexium 32, 3.4Nm, 6000rpm, keyed shaft, with brake, IP54, 128 multiturn encoder

BMH1001T12F2A

Product availability: Non-Stock - Not normally stocked in distribution facility

Main

Device short name	BMH
Product or Component Type	Servo motor
Maximum mechanical speed	6000 rpm
Continuous stall torque	30.09 lbf.in (3.4 N.m) LXM32.D30M2 10 A, 115 V, single phase 30.09 lbf.in (3.4 N.m) LXM32.D18M2 6 A, 230 V, single phase
Peak stall torque	78.8 lbf.in (8.9 N.m) LXM32.D30M2 10 A, 115 V, single phase 90.3 lbf.in (10.2 N.m) LXM32.D18M2 6 A, 230 V, single phase
Nominal output power	700 W LXM32.D30M2 10 A, 115 V, single phase 900 W LXM32.D18M2 6 A, 230 V, single phase
Nominal torque	29.2 lbf.in (3.3 N.m) LXM32.D30M2 10 A, 115 V, single phase 24.8 lbf.in (2.8 N.m) LXM32.D18M2 6 A, 230 V, single phase
Nominal speed	2000 rpm LXM32.D30M2 10 A, 115 V, single phase 3000 rpm LXM32.D18M2 6 A, 230 V, single phase
Product compatibility	LXM32.D30M2 115 V single phase LXM32.D18M2 230 V single phase
Shaft end	Keyed
IP Degree of Protection	IP54 standard
Speed feedback resolution	131072 points/turn x 4096 turns
Holding brake	With
Mounting Support	International standard flange
Electrical Connection	Rotatable right-angled connectors

Complementary

Range Compatibility	Lexium 32
[Us] rated supply voltage	240 V
Phase	Three phase
Continuous stall current	5.11 A
Continuous power	1.74 W
Maximum current Irms	15 A LXM32.D30M2 19.4 A LXM32.D18M2
Maximum permanent current	19.38 A
Second shaft	Without second shaft end
Shaft diameter	0.7 in (19 mm)
Shaft length	1.6 in (40 mm)
key width	1.2 in (30 mm)

Price is “List Price” and may be subject to a trade discount – check with your local distributor or retailer for actual price.

Disclaimer: This documentation is not intended as a substitute for and is not to be used for determining suitability or reliability of these products for specific user applications

Feedback type	Multiturn SinCos Hiperface
Holding torque	48.7 lbf.in (5.5 N.m) holding brake
Motor flange size	3.9 in (100 mm)
Number of motor stacks	1
Torque constant	0.67 N.m/A 248 °F (120 °C)
Back emf constant	43.3 V/krpm 248 °F (120 °C)
Number of motor poles	10
Rotor inertia	3.68 kg.cm²
Stator resistance	1.19 Ohm 68 °F (20 °C)
Stator inductance	5.3 mH 68 °F (20 °C)
Stator electrical time constant	4.5 ms 68 °F (20 °C)
Maximum radial force Fr	900 N 1000 rpm 720 N 2000 rpm 630 N 3000 rpm 570 N 4000 rpm 530 N 5000 rpm
Maximum axial force Fa	0.2 x Fr
Brake pull-in power	12 W
type of cooling	Natural convection
Length	6.7 in (170.3 mm)
Centring collar diameter	3.7 in (95 mm)
centring collar depth	0.1 in (3.5 mm)
Number of mounting holes	4
Mounting holes diameter	0.4 in (9 mm)
Circle diameter of the mounting holes	4.5 in (115 mm)
Net Weight	10.6 lb(US) (4.8 kg)

Ordering and shipping details

Category	US1PC5318282
Discount Schedule	PC53
GTIN	3606485196954
Returnability	No
Country of origin	DE

Packing Units

Unit Type of Package 1	PCE
Number of Units in Package 1	1
Package 1 Height	8.66 in (22.0 cm)
Package 1 Width	7.87 in (20.0 cm)
Package 1 Length	15.75 in (40.0 cm)
Package 1 Weight	11.2 lb(US) (5.1 kg)

Contractual warranty

Warranty	18 months

Environmental Data

Schneider Electric aims to achieve Net Zero status by 2050 through supply chain partnerships, lower impact materials, and circularity via our ongoing “Use Better, Use Longer, Use Again” campaign to extend product lifetimes and recyclability.

Environmental Data explained >

How we assess product sustainability >

Environmental footprint

Carbon footprint (kg CO2 eq, Total Life cycle)	**1017**
Environmental Disclosure	**Product Environmental Profile**

Use Better

Materials and Substances

Packaging made with recycled cardboard	**Yes**
Packaging without single use plastic	**No**
SCIP Number	**A7df881f-135f-4256-b8c2-ea55d4c9a151**
China RoHS Regulation	**China RoHS declaration**
California proposition 65	**WARNING: This product can expose you to chemicals including: Lead and lead compounds, which is known to the State of California to cause cancer and birth defects or other reproductive harm. For more information go to www.P65Warnings.ca.gov**
PVC free	**Yes**

Use Again

Repack and remanufacture

Circularity Profile	**No need of specific recycling operations**
WEEE	**The product must be disposed on European Union markets following specific waste collection and never end up in rubbish bins.**
Take-back	**No**

Dimensions Drawings

Servo Motors Dimensions

Example with Straight Connectors

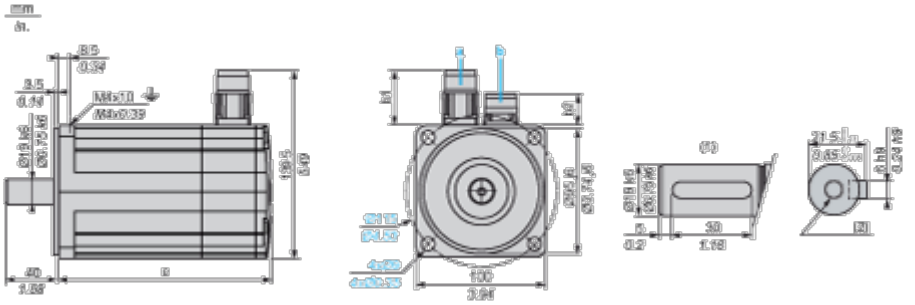

a: Power supply for servo motor brake

b: Power supply for servo motor encoder

(1) Shaft end, keyed slot (optional)

(2) For screw M6 x 21 mm/M6 x 0.83 in.

Dimensions in mm

Straight connectors		Rotatable angled connectors		c (without brake)	c (with brake)
b1	b2	b1	b2		
39.5	25.5	39.5	39.5	128	170

Dimensions in in.

Straight connectors		Rotatable angled connectors		c (without brake)	c (with brake)
b1	b2	b1	b2		
1.55	1.00	1.55	1.55	5.03	6.69

Performance Curves

115 V Single-Phase Supply Voltage

Torque/Speed Curves

Servo motor with LXM32•D30M2 servo drive

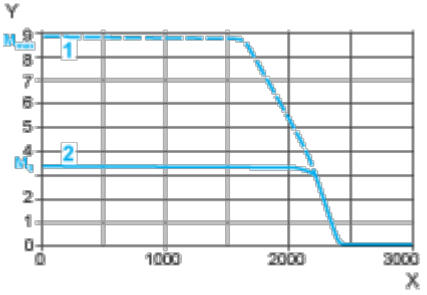

X Speed in rpm

Y Torque in Nm

1 Peak torque

2 Continuous torque

230 V Single-Phase Supply Voltage

Torque/Speed Curves

Servo motor with LXM32•D18M2 servo drive

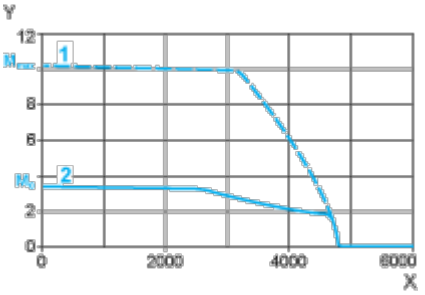

X Speed in rpm

Y Torque in Nm

1 Peak torque

2 Continuous torque