Product data sheet

Specifications



servo motor BMH, Lexium 32, 8.2Nm, 6000rpm, untapped shaft, without brake, IP54, 128bit encoder

BMH1003T01A2A

Product availability: Non-Stock - Not normally stocked in distribution facility

Main

Device short name	BMH
Product or Component Type	Servo motor
Maximum mechanical speed	6000 rpm
Continuous stall torque	72.6 lbf.in (8.2 N.m) LXM32.D30M2 10 A, 230 V, single phase
Peak stall torque	201.8 lbf.in (22.8 N.m) LXM32.D30M2 10 A, 230 V, single phase
Nominal output power	1450 W LXM32.D30M2 10 A, 230 V, single phase
Nominal torque	49.6 lbf.in (5.6 N.m) LXM32.D30M2 10 A, 230 V, single phase
Nominal speed	2500 rpm LXM32.D30M2 10 A, 230 V, single phase
Product compatibility	LXM32.D30M2 230 V single phase
Shaft end	Smooth shaft
IP Degree of Protection	IP54 standard
Speed feedback resolution	131072 points/turn
Holding brake	Without
Mounting Support	International standard flange
Electrical Connection	Rotatable right-angled connectors

Complementary

Range Compatibility	Lexium 32
[Us] rated supply voltage	240 V
Phase	Three phase
Continuous stall current	10 A
Continuous power	2.62 W
Maximum current Irms	30 A LXM32.D30M2
Maximum permanent current	33.85 A
Second shaft	Without second shaft end
Shaft diameter	0.7 in (19 mm)
Shaft length	1.6 in (40 mm)
Feedback type	Single turn SinCos Hiperface
Motor flange size	3.9 in (100 mm)
Number of motor stacks	3
Torque constant	0.851 N.m/A 248 °F (120 °C)

Price is “List Price” and may be subject to a trade discount – check with your local distributor or retailer for actual price.

Disclaimer: This documentation is not intended as a substitute for and is not to be used for determining suitability or reliability of these products for specific user applications

Back emf constant	54.8 V/krpm 248 °F (120 °C)
Number of motor poles	10
Rotor inertia	9.37 kg.cm²
Stator resistance	0.47 Ohm 68 °F (20 °C)
Stator inductance	3 mH 68 °F (20 °C)
Stator electrical time constant	6.4 ms 68 °F (20 °C)
Maximum radial force Fr	1050 N 1000 rpm 830 N 2000 rpm 730 N 3000 rpm 660 N 4000 rpm 610 N 5000 rpm
Maximum axial force Fa	0.2 x Fr
type of cooling	Natural convection
Length	7.6 in (192.6 mm)
Centring collar diameter	3.7 in (95 mm)
centring collar depth	0.1 in (3.5 mm)
Number of mounting holes	4
Mounting holes diameter	0.4 in (9 mm)
Circle diameter of the mounting holes	4.5 in (115 mm)
Net Weight	14.3 lb(US) (6.5 kg)

Ordering and shipping details

Category	US1PC5318282
Discount Schedule	PC53
GTIN	3606485201047
Returnability	No
Country of origin	DE

Packing Units

Unit Type of Package 1	PCE
Number of Units in Package 1	1
Package 1 Height	8.66 in (22.0 cm)
Package 1 Width	7.87 in (20.0 cm)
Package 1 Length	15.75 in (40.0 cm)
Package 1 Weight	15.0 lb(US) (6.8 kg)

Contractual warranty

Warranty	18 months

Environmental Data

Schneider Electric aims to achieve Net Zero status by 2050 through supply chain partnerships, lower impact materials, and circularity via our ongoing “Use Better, Use Longer, Use Again” campaign to extend product lifetimes and recyclability.

Environmental Data explained >

How we assess product sustainability >

Environmental footprint

Carbon footprint (kg CO2 eq, Total Life cycle)	**1619**
Environmental Disclosure	**Product Environmental Profile**

Use Better

Materials and Substances

Packaging made with recycled cardboard	**Yes**
Packaging without single use plastic	**No**
SCIP Number	**A7df881f-135f-4256-b8c2-ea55d4c9a151**
China RoHS Regulation	**China RoHS declaration**
California proposition 65	**WARNING: This product can expose you to chemicals including: Lead and lead compounds, which is known to the State of California to cause cancer and birth defects or other reproductive harm. For more information go to www.P65Warnings.ca.gov**
PVC free	**Yes**

Use Again

Repack and remanufacture

Circularity Profile	**No need of specific recycling operations**
WEEE	**The product must be disposed on European Union markets following specific waste collection and never end up in rubbish bins.**
Take-back	**No**

Dimensions Drawings

Servo Motors Dimensions

Example with Straight Connectors

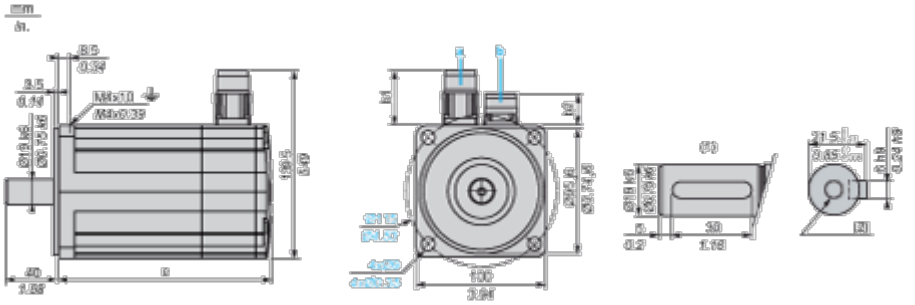

a: Power supply for servo motor brake

b: Power supply for servo motor encoder

(1) Shaft end, keyed slot (optional)

(2) For screw M6 x 21 mm/M6 x 0.83 in.

Dimensions in mm

Straight connectors		Rotatable angled connectors		c (without brake)	c (with brake)
b1	b2	b1	b2		
39.5	25.5	39.5	39.5	192	234

Dimensions in in.

Straight connectors		Rotatable angled connectors		c (without brake)	c (with brake)
b1	b2	b1	b2		
1.55	1.00	1.55	1.55	7.55	9.21

Performance Curves

230 V Single-Phase Supply Voltage

Torque/Speed Curves

Servo motor with LXM32•D30M2 servo drive

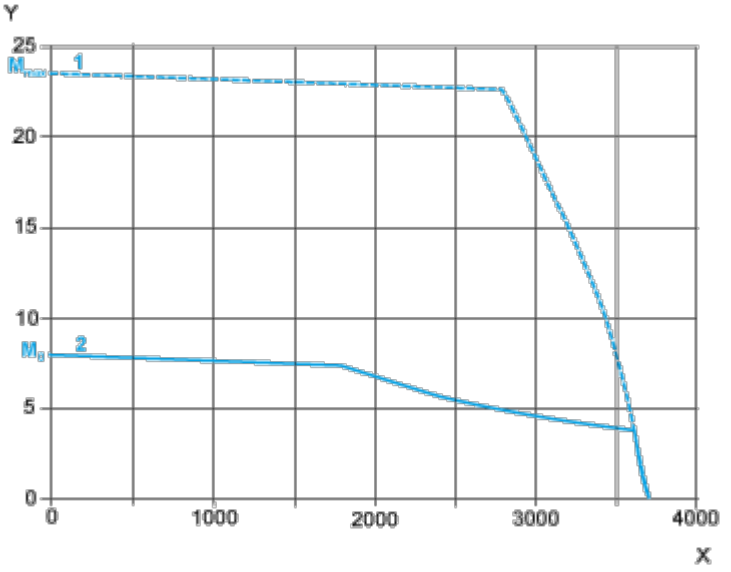

X Speed in rpm

Y Torque in Nm

1 Peak torque

2 Continuous torque