Product data sheet

Specifications



servo motor BSH, Lexium 32, 0.21N.m, 9000rpm, 40mm, untapped shaft, 16 Sincos Multi turn, with brake, IP50

BSH0401P07F2A

Product availability: Non-Stock - Not normally stocked in distribution facility

Main

Device short name	BSH
Product or Component Type	Servo motor
Maximum mechanical speed	10000 rpm
Continuous stall torque	1.86 lbf.in (0.21 N.m) LXM32.U60N4 1.5 A, 480 V, three phase 1.86 lbf.in (0.21 N.m) LXM32.U60N4 1.5 A, 400 V, three phase 1.86 lbf.in (0.21 N.m) LXM32.U45M2 1.5 A, 230 V, single phase
Peak stall torque	7.08 lbf.in (0.8 N.m) LXM32.U60N4 1.5 A, 480 V, three phase 7.08 lbf.in (0.8 N.m) LXM32.U60N4 1.5 A, 400 V, three phase 7.08 lbf.in (0.8 N.m) LXM32.U45M2 1.5 A, 230 V, single phase
Nominal output power	166 W LXM32.U60N4 1.5 A, 480 V, three phase 166 W LXM32.U60N4 1.5 A, 400 V, three phase 77 W LXM32.U45M2 1.5 A, 230 V, single phase
Nominal torque	1.558 lbf.in (0.176 N.m) LXM32.U60N4 1.5 A, 480 V, three phase 1.558 lbf.in (0.176 N.m) LXM32.U60N4 1.5 A, 400 V, three phase 1.629 lbf.in (0.184 N.m) LXM32.U45M2 1.5 A, 230 V, single phase
Nominal speed	9000 rpm LXM32.U60N4 1.5 A, 480 V, three phase 9000 rpm LXM32.U60N4 1.5 A, 400 V, three phase 4000 rpm LXM32.U45M2 1.5 A, 230 V, single phase
Shaft end	Smooth shaft
IP Degree of Protection	IP50 standard
Speed feedback resolution	32768 points/turn x 4096 turns
Holding brake	With
Mounting Support	International standard flange
Electrical Connection	Rotatable right-angled connectors

Complementary

Range Compatibility	Lexium 32
supply voltage max	400 V
Phase	Three phase
Continuous stall current	1.12 A
maximum continuous power	220 W
Maximum current Irms	4.7 A LXM32.U60N4 480 V 4.7 A LXM32.U60N4 400 V 4.7 A LXM32.U45M2 230 V
Maximum permanent current	1.12 A
Switching frequency	8 kHz

Price is “List Price” and may be subject to a trade discount – check with your local distributor or retailer for actual price.

Disclaimer: This documentation is not intended as a substitute for and is not to be used for determining suitability or reliability of these products for specific user applications

Second shaft	Without second shaft end
Shaft diameter	0.3 in (8 mm)
Shaft length	1.0 in (25 mm)
Feedback type	Multiturn SinCos Hiperface
Holding torque	3.5 lbf.in (0.4 N.m) holding brake
Motor flange size	1.6 in (40 mm)
Number of motor stacks	1
Torque constant	0.19 N.m/A 248 °F (120 °C)
Back emf constant	13.6 V/krpm 68 °F (20 °C)
Number of motor poles	10
Rotor inertia	0.04 kg.cm²
Stator resistance	17.2 Ohm 68 °F (20 °C)
Stator inductance	14.6 mH 68 °F (20 °C)
Stator electrical time constant	0.85 ms 68 °F (20 °C)
Maximum axial force Fa	0.2 x Fr
Brake pull-in power	5.8 W
type of cooling	Natural convection
Length	3.9 in (99.4 mm)
Centring collar diameter	1.2 in (30 mm)
centring collar depth	0.10 in (2.5 mm)
Number of mounting holes	4
Mounting holes diameter	0.2 in (4.5 mm)
Circle diameter of the mounting holes	1.8 in (46 mm)
Net Weight	1.3 lb(US) (0.6 kg)

Ordering and shipping details

Category	US1PC5318282
Discount Schedule	PC53
GTIN	3606485467207
Returnability	No
Country of origin	DE

Packing Units

Unit Type of Package 1	PCE
Number of Units in Package 1	1
Package 1 Height	4.33 in (11.0 cm)
Package 1 Width	6.69 in (17.0 cm)
Package 1 Length	9.45 in (24.0 cm)
Package 1 Weight	22.1 oz (627.0 g)

Environmental Data

Schneider Electric aims to achieve Net Zero status by 2050 through supply chain partnerships, lower impact materials, and circularity via our ongoing “Use Better, Use Longer, Use Again” campaign to extend product lifetimes and recyclability.

Environmental Data explained >

How we assess product sustainability >

Environmental footprint

Carbon footprint (kg CO2 eq, Total Life cycle)	198
Environmental Disclosure	Product Environmental Profile

Use Better

Materials and Substances

EU RoHS Directive	Pro-active compliance (Product out of EU RoHS legal scope)
REACh Regulation	REACh Declaration
China RoHS Regulation	China RoHS declaration
California proposition 65	WARNING: This product can expose you to chemicals including: Lead and lead compounds, which is known to the State of California to cause cancer and birth defects or other reproductive harm. For more information go to www.P65Warnings.ca.gov
PVC free	Yes

Use Again

Repack and remanufacture

Circularity Profile	No need of specific recycling operations
WEEE	The product must be disposed on European Union markets following specific waste collection and never end up in rubbish bins.
Take-back	No

Dimensions Drawings

Servo Motors Dimensions

For Servo Motor with Brake

Front view

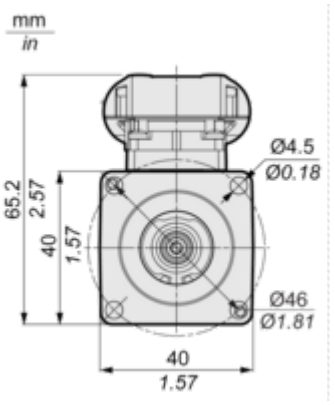

Left view

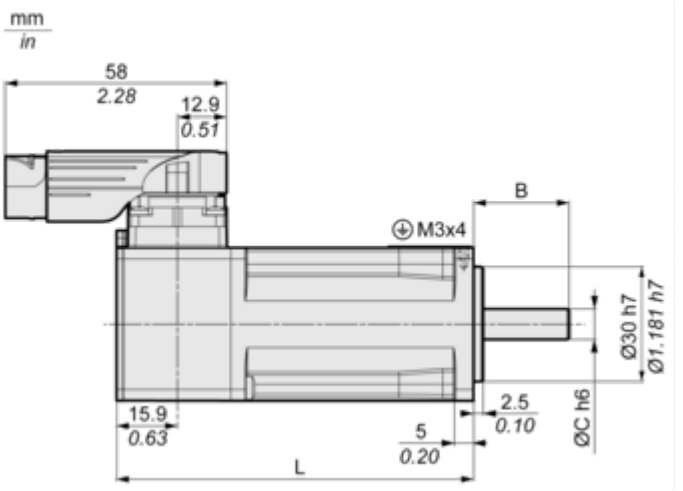

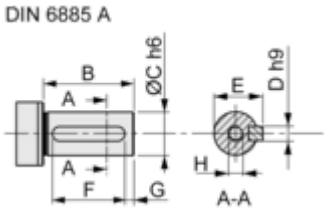

	Dimensions in mm	Dimensions in in.
L	99.4	3.91
B	25	0.98
C	8	0.31
D	3	0.12

	Dimensions in mm	Dimensions in in.
E	9.2	0.36
F	12	0.47
G	4	0.16
H	DIN 332 DS M3 x 9	
A	DIN 6885-A3x3x12	