Product data sheet

Specifications

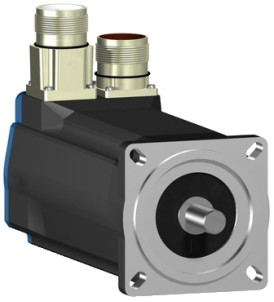

servo motor BSH, Lexium 05, 1.1N.m, 3000rpm, 70mm, untapped shaft, Sincos single turn, without brake, IP50

BSH0703P01A2A

Product availability: Non-Stock - Not normally stocked in distribution facility

Main

Device short name	BSH
Product or Component Type	Servo motor
Maximum mechanical speed	8000 rpm
Continuous stall torque	25.05 lbf.in (2.83 N.m) LXM15LD21M3, 230 V, single phase 9.7 lbf.in (1.1 N.m) LXM15LU60N4, 480 V, three phase 9.7 lbf.in (1.1 N.m) LXM15LU60N4, 400 V, three phase 13.3 lbf.in (1.5 N.m) LXM15LU60N4, 230 V, three phase 19.74 lbf.in (2.23 N.m) LXM15LD13M3, 230 V, three phase 21.2 lbf.in (2.4 N.m) LXM15LD10N4, 230 V, three phase 21.2 lbf.in (2.4 N.m) LXM15LD10N4, 400 V, three phase 21.2 lbf.in (2.4 N.m) LXM15LD10N4, 480 V, three phase 25.05 lbf.in (2.83 N.m) LXM15LD17N4, 230 V, three phase 25.05 lbf.in (2.83 N.m) LXM15LD17N4, 400 V, three phase 25.05 lbf.in (2.83 N.m) LXM15LD17N4, 480 V, three phase 25.05 lbf.in (2.83 N.m) LXM15LD21M3, 230 V, three phase 24.8 lbf.in (2.8 N.m) LXM05AD17M2, 200...240 V, single phase 24.8 lbf.in (2.8 N.m) LXM05AD17M3X, 200...240 V, three phase 24.8 lbf.in (2.8 N.m) LXM05AD22N4, 380...480 V, three phase 24.8 lbf.in (2.8 N.m) LXM05AD28M2, 200...240 V, single phase 24.8 lbf.in (2.8 N.m) LXM05BD17M2, 200...240 V, single phase 24.8 lbf.in (2.8 N.m) LXM05BD17M3X, 200...240 V, three phase 24.8 lbf.in (2.8 N.m) LXM05BD22N4, 380...480 V, three phase 24.8 lbf.in (2.8 N.m) LXM05BD28M2, 200...240 V, single phase 24.8 lbf.in (2.8 N.m) LXM05CD17M2, 200...240 V, single phase 24.8 lbf.in (2.8 N.m) LXM05CD17M3X, 200...240 V, three phase 24.8 lbf.in (2.8 N.m) LXM05CD22N4, 380...480 V, three phase 24.8 lbf.in (2.8 N.m) LXM05CD28M2, 200...240 V, single phase 27.4 lbf.in (3.1 N.m) LXM32.D18N4 6 A, 400 V, three phase 27.4 lbf.in (3.1 N.m) LXM32.D18N4 6 A, 480 V, three phase

Disclaimer: This documentation is not intended as a substitute for and is not to be used for determining suitability or reliability of these products for specific user applications

Price is “List Price” and may be subject to a trade discount – check with your local distributor or retailer for actual price.

Peak stall torque	53.02 lbf.in (5.99 N.m) LXM15LD21M3, 230 V, single phase 63.37 lbf.in (7.16 N.m) LXM05AD17M2, 200...240 V, single phase 91.2 lbf.in (10.3 N.m) LXM05AD28M2, 200...240 V, single phase 63.37 lbf.in (7.16 N.m) LXM05BD17M2, 200...240 V, single phase 91.2 lbf.in (10.3 N.m) LXM05BD28M2, 200...240 V, single phase 63.37 lbf.in (7.16 N.m) LXM05CD17M2, 200...240 V, single phase 91.2 lbf.in (10.3 N.m) LXM05CD28M2, 200...240 V, single phase 29.2 lbf.in (3.3 N.m) LXM15LU60N4, 480 V, three phase 29.2 lbf.in (3.3 N.m) LXM15LU60N4, 400 V, three phase 29.2 lbf.in (3.3 N.m) LXM15LU60N4, 230 V, three phase 53.1 lbf.in (6 N.m) LXM15LD13M3, 230 V, three phase 46.9 lbf.in (5.3 N.m) LXM15LD10N4, 230 V, three phase 46.9 lbf.in (5.3 N.m) LXM15LD10N4, 400 V, three phase 46.9 lbf.in (5.3 N.m) LXM15LD10N4, 480 V, three phase 68.24 lbf.in (7.71 N.m) LXM15LD17N4, 230 V, three phase 68.24 lbf.in (7.71 N.m) LXM15LD17N4, 400 V, three phase 68.24 lbf.in (7.71 N.m) LXM15LD17N4, 480 V, three phase 82.13 lbf.in (9.28 N.m) LXM15LD21M3, 230 V, three phase 63.37 lbf.in (7.16 N.m) LXM05AD17M3X, 200...240 V, three phase 77.44 lbf.in (8.75 N.m) LXM05AD22N4, 380...480 V, three phase 63.37 lbf.in (7.16 N.m) LXM05BD17M3X, 200...240 V, three phase 77.44 lbf.in (8.75 N.m) LXM05BD22N4, 380...480 V, three phase 63.37 lbf.in (7.16 N.m) LXM05CD17M3X, 200...240 V, three phase 77.44 lbf.in (8.75 N.m) LXM05CD22N4, 380...480 V, three phase 100.01 lbf.in (11.3 N.m) LXM32.D18N4 6 A, 400 V, three phase 100.01 lbf.in (11.3 N.m) LXM32.D18N4 6 A, 480 V, three phase
Nominal output power	750 W LXM05AD17M2, 200...240 V, single phase 750 W LXM05AD28M2, 200...240 V, single phase 750 W LXM05BD17M2, 200...240 V, single phase 750 W LXM05BD28M2, 200...240 V, single phase 750 W LXM05CD17M2, 200...240 V, single phase 750 W LXM05CD28M2, 200...240 V, single phase 750 W LXM15LD21M3, 230 V, single phase 1250 W LXM15LD10N4, 400 V, three phase 1300 W LXM15LD17N4, 400 V, three phase 1400 W LXM15LD17N4, 480 V, three phase 1500 W LXM15LD10N4, 480 V, three phase 350 W LXM15LU60N4, 230 V, three phase 700 W LXM15LD13M3, 230 V, three phase 700 W LXM15LU60N4, 400 V, three phase 750 W LXM05AD17M3X, 200...240 V, three phase 750 W LXM05AD22N4, 380...480 V, three phase 750 W LXM05BD17M3X, 200...240 V, three phase 750 W LXM05BD22N4, 380...480 V, three phase 750 W LXM05CD17M3X, 200...240 V, three phase 750 W LXM05CD22N4, 380...480 V, three phase 750 W LXM15LD10N4, 230 V, three phase 750 W LXM15LD17N4, 230 V, three phase 750 W LXM15LD21M3, 230 V, three phase 950 W LXM15LU60N4, 480 V, three phase 1300 W LXM32.D18N4 6 A, 400 V, three phase 1300 W LXM32.D18N4 6 A, 480 V, three phase

Nominal torque	21.2 lbf.in (2.4 N.m) LXM05AD17M2, 200...240 V, single phase 21.2 lbf.in (2.4 N.m) LXM05AD28M2, 200...240 V, single phase 21.2 lbf.in (2.4 N.m) LXM05BD17M2, 200...240 V, single phase 21.2 lbf.in (2.4 N.m) LXM05BD28M2, 200...240 V, single phase 21.2 lbf.in (2.4 N.m) LXM05CD17M2, 200...240 V, single phase 21.2 lbf.in (2.4 N.m) LXM05CD28M2, 200...240 V, single phase 21.2 lbf.in (2.4 N.m) LXM15LD21M3, 230 V, single phase 9.91 lbf.in (1.12 N.m) LXM15LU60N4, 230 V, three phase 9.91 lbf.in (1.12 N.m) LXM15LU60N4, 400 V, three phase 9.91 lbf.in (1.12 N.m) LXM15LU60N4, 480 V, three phase 15.9 lbf.in (1.8 N.m) LXM15LD10N4, 480 V, three phase 17.35 lbf.in (1.96 N.m) LXM15LD17N4, 480 V, three phase 17.7 lbf.in (2 N.m) LXM15LD10N4, 400 V, three phase 17.7 lbf.in (2 N.m) LXM15LD17N4, 400 V, three phase 19.74 lbf.in (2.23 N.m) LXM15LD13M3, 230 V, three phase 21.2 lbf.in (2.4 N.m) LXM05AD17M3X, 200...240 V, three phase 21.2 lbf.in (2.4 N.m) LXM05AD22N4, 380...480 V, three phase 21.2 lbf.in (2.4 N.m) LXM05BD17M3X, 200...240 V, three phase 21.2 lbf.in (2.4 N.m) LXM05BD22N4, 380...480 V, three phase 21.2 lbf.in (2.4 N.m) LXM05CD17M3X, 200...240 V, three phase 21.2 lbf.in (2.4 N.m) LXM05CD22N4, 380...480 V, three phase 21.2 lbf.in (2.4 N.m) LXM15LD10N4, 230 V, three phase 21.2 lbf.in (2.4 N.m) LXM15LD17N4, 230 V, three phase 21.2 lbf.in (2.4 N.m) LXM15LD21M3, 230 V, three phase 21.60 lbf.in (2.44 N.m) LXM32.D18N4 6 A, 400 V, three phase 21.60 lbf.in (2.44 N.m) LXM32.D18N4 6 A, 480 V, three phase
Nominal speed	3000 rpm LXM15LD13M3, 230 V, three phase 3000 rpm LXM05AD17M2, 200...240 V, single phase 3000 rpm LXM05BD17M2, 200...240 V, single phase 3000 rpm LXM05CD17M2, 200...240 V, single phase 3000 rpm LXM05AD17M3X, 200...240 V, three phase 3000 rpm LXM05BD17M3X, 200...240 V, three phase 3000 rpm LXM05CD17M3X, 200...240 V, three phase 3000 rpm LXM15LU60N4, 230 V, three phase 8000 rpm LXM15LD10N4, 480 V, three phase 8000 rpm LXM15LU60N4, 480 V, three phase 3000 rpm LXM15LD10N4, 230 V, three phase 6000 rpm LXM15LD10N4, 400 V, three phase 3000 rpm LXM05AD28M2, 200...240 V, single phase 3000 rpm LXM05BD28M2, 200...240 V, single phase 3000 rpm LXM05CD28M2, 200...240 V, single phase 3000 rpm LXM15LD21M3, 230 V, single phase 3000 rpm LXM05AD22N4, 380...480 V, three phase 3000 rpm LXM05BD22N4, 380...480 V, three phase 3000 rpm LXM05CD22N4, 380...480 V, three phase 3000 rpm LXM15LD17N4, 230 V, three phase 3000 rpm LXM15LD21M3, 230 V, three phase 6000 rpm LXM15LD17N4, 400 V, three phase 6000 rpm LXM15LU60N4, 400 V, three phase 7000 rpm LXM15LD17N4, 480 V, three phase 5000 rpm LXM32.D18N4 6 A, 400 V, three phase 5000 rpm LXM32.D18N4 6 A, 480 V, three phase

Product compatibility	LXM05AD17M2 200...240 V single phase LXM05AD28M2 200...240 V single phase LXM05BD17M2 200...240 V single phase LXM05BD28M2 200...240 V single phase LXM05CD17M2 200...240 V single phase LXM05CD28M2 200...240 V single phase LXM15LD21M3 230 V single phase LXM15LU60N4 230 V three phase LXM15LD13M3 230 V three phase LXM15LU60N4 400 V three phase LXM15LU60N4 480 V three phase LXM15LD10N4 400 V three phase LXM05AD17M3X 200...240 V three phase LXM05BD17M3X 200...240 V three phase LXM05CD17M3X 200...240 V three phase LXM15LD10N4 230 V three phase LXM15LD10N4 480 V three phase LXM15LD21M3 230 V three phase LXM15LD17N4 230 V three phase LXM05AD22N4 380...480 V three phase LXM05BD22N4 380...480 V three phase LXM05CD22N4 380...480 V three phase LXM15LD17N4 400 V three phase LXM15LD17N4 480 V three phase LXM32.D18N4 400 V three phase LXM32.D18N4 480 V three phase
Shaft end	Untapped
IP Degree of Protection	IP50 standard
Speed feedback resolution	131072 points/turn
Holding brake	Without
Mounting Support	International standard flange
Electrical Connection	Rotatable right-angled connectors

Complementary

Range Compatibility	Lexium 15 Lexium 05 Lexium 32
supply voltage max	480 V
Phase	Three phase
Continuous stall current	4.1 A
maximum continuous power	1.7 W
Maximum current Irms	15.2 A LXM15LD13M3 15.2 A LXM15LD21M3 15.2 A LXM15LD17N4 15.2 A LXM15LU60N4 15.2 A LXM15LD10N4 17 A LXM05AD17M2 17 A LXM05AD28M2 17 A LXM05AD17M3X 17 A LXM05AD22N4 17 A LXM05BD17M2 17 A LXM05BD28M2 17 A LXM05BD17M3X 17 A LXM05BD22N4 17 A LXM05CD17M2 17 A LXM05CD28M2 17 A LXM05CD17M3X 17 A LXM05CD22N4 17 A LXM32.D18N4
Maximum permanent current	17 A
Switching frequency	8 kHz
Second shaft	Without second shaft end

Shaft diameter	0.6 in (14 mm)
Shaft length	1.2 in (30 mm)
Feedback type	Single turn SinCos Hiperface
Motor flange size	2.8 in (70 mm)
Number of motor stacks	3
Torque constant	0.78 N.m/A 248 °F (120 °C)
Back emf constant	49 V/krpm 248 °F (120 °C)
Number of motor poles	6
Rotor inertia	0.58 kg.cm²
Stator resistance	2.7 Ohm 68 °F (20 °C)
Stator inductance	13 mH 68 °F (20 °C)
Stator electrical time constant	4.82 ms 68 °F (20 °C)
Maximum radial force Fr	400 N 6000 rpm 430 N 5000 rpm 460 N 4000 rpm 510 N 3000 rpm 580 N 2000 rpm 730 N 1000 rpm
Maximum axial force Fa	0.2 x Fr
type of cooling	Natural convection
Length	8.7 in (220 mm)
Centring collar diameter	2.4 in (60 mm)
centring collar depth	0.10 in (2.5 mm)
Number of mounting holes	4
Mounting holes diameter	0.2 in (5.5 mm)
Circle diameter of the mounting holes	3.2 in (82 mm)
Net Weight	7.98 lb(US) (3.62 kg)

Ordering and shipping details

Category	US1PC5318282
Discount Schedule	PC53
GTIN	3389118137134
Returnability	No
Country of origin	DE

Packing Units

Unit Type of Package 1	PCE
Number of Units in Package 1	1
Package 1 Height	7.09 in (18 cm)
Package 1 Width	6.69 in (17 cm)
Package 1 Length	18.11 in (46 cm)
Package 1 Weight	9.107 lb(US) (4.131 kg)

Contractual warranty

Warranty	18 months

Environmental Data

Schneider Electric aims to achieve Net Zero status by 2050 through supply chain partnerships, lower impact materials, and circularity via our ongoing “Use Better, Use Longer, Use Again” campaign to extend product lifetimes and recyclability.

Environmental Data explained >

How we assess product sustainability >

Environmental footprint

Carbon footprint (kg CO2 eq, Total Life cycle)	**1646**
Environmental Disclosure	**Product Environmental Profile**

Use Better

Materials and Substances

EU RoHS Directive	**Pro-active compliance (Product out of EU RoHS legal scope)**
REACh Regulation	**REACh Declaration**
China RoHS Regulation	**China RoHS declaration**
California proposition 65	**WARNING: This product can expose you to chemicals including: Lead and lead compounds, which is known to the State of California to cause cancer and birth defects or other reproductive harm. For more information go to www.P65Warnings.ca.gov**
PVC free	**Yes**

Use Again

Repack and remanufacture

Circularity Profile	**No need of specific recycling operations**
WEEE	**The product must be disposed on European Union markets following specific waste collection and never end up in rubbish bins.**
Take-back	**No**

Dimensions Drawings

Servo Motors Dimensions

Example with Straight Connectors

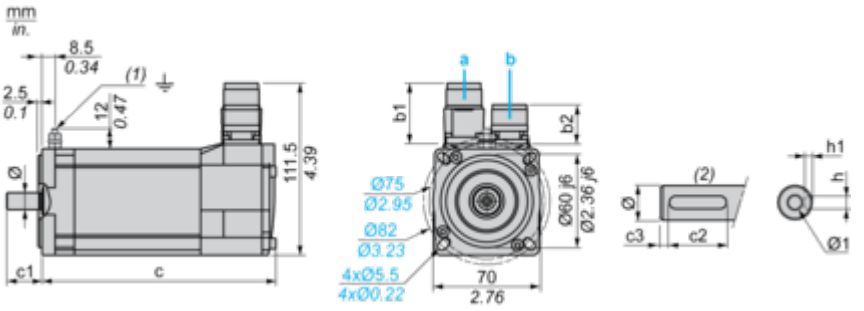

a: Power supply for servo motor brake
b: Power supply for servo motor encoder
(1) M4 screw
(2) Shaft end, keyed slot (optional)

Dimensions in mm

Straight connectors		Rotatable angled connectors		c (without brake)	c (with brake)	c1	c2	c3	h	h1	Ø	Ø1 for screws
b1	b2	b1	b2									
39.5	25.5	39.5	39.5	220	254	30	20	5	5 N9	$3^{+0.1}_{0}$	14 k6	M5 x 12.5

Dimensions in in.

Straight connectors		Rotatable angled connectors		c (without brake)	c (with brake)	c1	c2	c3	h	h1	Ø	Ø1 for screws
b1	b2	b1	b2									
1.55	1.00	1.55	1.55	8.66	10.00	1.18	0.78	0.19	0.20 N9	$0.12^{+0.004}_{0}$	0.55 k6	M5 x 0.49

Performance Curves

400 V 3-Phase Supply Voltage

Torque/Speed Curves

Servo motor with LXM32•D18N4 servo drive

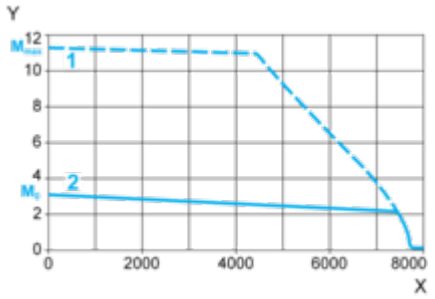

X Speed in rpm
Y Torque in Nm
1 Peak torque
2 Continuous torque

480 V 3-Phase Supply Voltage

Torque/Speed Curves

Servo motor with LXM32•D18N4 servo drive

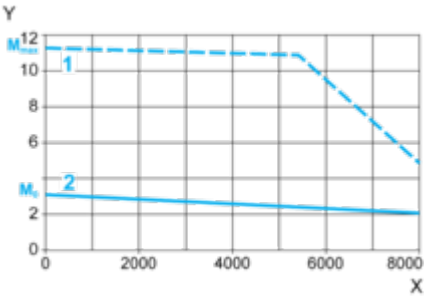

X Speed in rpm
Y Torque in Nm
1 Peak torque
2 Continuous torque