Product data sheet

Specifications



AC servo motor BSH, Lexium 05, 3.4N.m, 2500rpm, keyed shaft, with brake, IP65

BSH1002P32F2A

Product availability: Non-Stock - Not normally stocked in distribution facility

Main

Device short name	BSH
Product or Component Type	Servo motor
Maximum mechanical speed	6000 rpm
Continuous stall torque	39.8 lbf.in (4.5 N.m) LXM15LD21M3, 230 V, single phase 30.09 lbf.in (3.4 N.m) LXM15LD13M3, 230 V, three phase 30.09 lbf.in (3.4 N.m) LXM15LD10N4, 230 V, three phase 30.09 lbf.in (3.4 N.m) LXM15LD10N4, 400 V, three phase 30.09 lbf.in (3.4 N.m) LXM15LD10N4, 480 V, three phase 51.3 lbf.in (5.8 N.m) LXM15LD17N4, 400 V, three phase 51.3 lbf.in (5.8 N.m) LXM15LD17N4, 480 V, three phase 51.3 lbf.in (5.8 N.m) LXM15LD21M3, 230 V, three phase 48.7 lbf.in (5.5 N.m) LXM05AD17M3X, 200...240 V, three phase 48.7 lbf.in (5.5 N.m) LXM05AD22N4, 380...480 V, three phase 48.7 lbf.in (5.5 N.m) LXM05AD28M2, 200...240 V, single phase 48.7 lbf.in (5.5 N.m) LXM05BD17M3X, 200...240 V, three phase 48.7 lbf.in (5.5 N.m) LXM05BD22N4, 380...480 V, three phase 48.7 lbf.in (5.5 N.m) LXM05BD28M2, 200...240 V, single phase 48.7 lbf.in (5.5 N.m) LXM05CD17M3X, 200...240 V, three phase 48.7 lbf.in (5.5 N.m) LXM05CD22N4, 380...480 V, three phase 48.7 lbf.in (5.5 N.m) LXM05CD28M2, 200...240 V, single phase 51.3 lbf.in (5.8 N.m) LXM32.D18N4 6 A, 400 V, three phase 51.3 lbf.in (5.8 N.m) LXM32.D18N4 6 A, 480 V, three phase
Peak stall torque	83.11 lbf.in (9.39 N.m) LXM15LD21M3, 230 V, single phase 49.6 lbf.in (5.6 N.m) LXM15LD13M3, 230 V, three phase 70.8 lbf.in (8 N.m) LXM15LD10N4, 230 V, three phase 70.8 lbf.in (8 N.m) LXM15LD10N4, 400 V, three phase 70.8 lbf.in (8 N.m) LXM15LD10N4, 480 V, three phase 107.36 lbf.in (12.13 N.m) LXM15LD17N4, 400 V, three phase 107.36 lbf.in (12.13 N.m) LXM15LD17N4, 480 V, three phase 130.90 lbf.in (14.79 N.m) LXM15LD21M3, 230 V, three phase 99.39 lbf.in (11.23 N.m) LXM05AD17M3X, 200...240 V, three phase 123.20 lbf.in (13.92 N.m) LXM05AD22N4, 380...480 V, three phase 141.6 lbf.in (16 N.m) LXM05AD28M2, 200...240 V, single phase 99.39 lbf.in (11.23 N.m) LXM05BD17M3X, 200...240 V, three phase 123.20 lbf.in (13.92 N.m) LXM05BD22N4, 380...480 V, three phase 141.6 lbf.in (16 N.m) LXM05BD28M2, 200...240 V, single phase 99.39 lbf.in (11.23 N.m) LXM05CD17M3X, 200...240 V, three phase 123.20 lbf.in (13.92 N.m) LXM05CD22N4, 380...480 V, three phase 141.6 lbf.in (16 N.m) LXM05CD28M2, 200...240 V, single phase 162.0 lbf.in (18.3 N.m) LXM32.D18N4 6 A, 400 V, three phase 162.0 lbf.in (18.3 N.m) LXM32.D18N4 6 A, 480 V, three phase

Disclaimer: This documentation is not intended as a substitute for and is not to be used for determining suitability or reliability of these products for specific user applications

Price is “List Price” and may be subject to a trade discount – check with your local distributor or retailer for actual price.

Nominal output power	950 W LXM15LD21M3, 230 V, single phase 950 W LXM15LD21M3, 230 V, three phase 780 W LXM05AD28M2, 200...240 V, single phase 780 W LXM05BD28M2, 200...240 V, single phase 780 W LXM05CD28M2, 200...240 V, single phase 1400 W LXM05AD22N4, 380...480 V, three phase 1400 W LXM05BD22N4, 380...480 V, three phase 1400 W LXM05CD22N4, 380...480 V, three phase 1600 W LXM15LD10N4, 400 V, three phase 1700 W LXM15LD17N4, 400 V, three phase 1950 W LXM15LD17N4, 480 V, three phase 2150 W LXM15LD10N4, 480 V, three phase 780 W LXM05AD17M3X, 200...240 V, three phase 780 W LXM05BD17M3X, 200...240 V, three phase 780 W LXM05CD17M3X, 200...240 V, three phase 840 W LXM15LD13M3, 230 V, three phase 890 W LXM15LD10N4, 230 V, three phase 1700 W LXM32.D18N4 6 A, 400 V, three phase 1700 W LXM32.D18N4 6 A, 480 V, three phase
Nominal torque	39.8 lbf.in (4.5 N.m) LXM15LD21M3, 230 V, single phase 43.90 lbf.in (4.96 N.m) LXM05AD28M2, 200...240 V, single phase 43.90 lbf.in (4.96 N.m) LXM05BD28M2, 200...240 V, single phase 43.90 lbf.in (4.96 N.m) LXM05CD28M2, 200...240 V, single phase 30.09 lbf.in (3.4 N.m) LXM15LD10N4, 230 V, three phase 30.09 lbf.in (3.4 N.m) LXM15LD10N4, 400 V, three phase 30.09 lbf.in (3.4 N.m) LXM15LD10N4, 480 V, three phase 30.09 lbf.in (3.4 N.m) LXM15LD13M3, 230 V, three phase 32.7 lbf.in (3.7 N.m) LXM15LD17N4, 480 V, three phase 35.4 lbf.in (4 N.m) LXM15LD17N4, 400 V, three phase 38.9 lbf.in (4.4 N.m) LXM05AD22N4, 380...480 V, three phase 38.9 lbf.in (4.4 N.m) LXM05BD22N4, 380...480 V, three phase 38.9 lbf.in (4.4 N.m) LXM05CD22N4, 380...480 V, three phase 43.90 lbf.in (4.96 N.m) LXM05AD17M3X, 200...240 V, three phase 43.90 lbf.in (4.96 N.m) LXM05BD17M3X, 200...240 V, three phase 43.90 lbf.in (4.96 N.m) LXM05CD17M3X, 200...240 V, three phase 51.3 lbf.in (5.8 N.m) LXM15LD21M3, 230 V, three phase 35.4 lbf.in (4 N.m) LXM32.D18N4 6 A, 400 V, three phase 35.4 lbf.in (4 N.m) LXM32.D18N4 6 A, 480 V, three phase
Nominal speed	3000 rpm LXM05AD22N4, 380...480 V, three phase 3000 rpm LXM05BD22N4, 380...480 V, three phase 3000 rpm LXM05CD22N4, 380...480 V, three phase 1500 rpm LXM05AD17M3X, 200...240 V, three phase 1500 rpm LXM05BD17M3X, 200...240 V, three phase 1500 rpm LXM05CD17M3X, 200...240 V, three phase 4500 rpm LXM15LD10N4, 400 V, three phase 6000 rpm LXM15LD10N4, 480 V, three phase 4000 rpm LXM32.D18N4 6 A, 400 V, three phase 4000 rpm LXM32.D18N4 6 A, 480 V, three phase 1500 rpm LXM05AD28M2, 200...240 V, single phase 1500 rpm LXM05BD28M2, 200...240 V, single phase 1500 rpm LXM05CD28M2, 200...240 V, single phase 2000 rpm LXM15LD21M3, 230 V, single phase 2000 rpm LXM15LD21M3, 230 V, three phase 2500 rpm LXM15LD10N4, 230 V, three phase 2500 rpm LXM15LD13M3, 230 V, three phase 4000 rpm LXM15LD17N4, 400 V, three phase 5000 rpm LXM15LD17N4, 480 V, three phase
Product compatibility	LXM05AD28M2 200...240 V single phase LXM05BD28M2 200...240 V single phase LXM05CD28M2 200...240 V single phase LXM15LD21M3 230 V single phase LXM15LD13M3 230 V three phase LXM15LD10N4 400 V three phase LXM05AD17M3X 200...240 V three phase LXM05BD17M3X 200...240 V three phase LXM05CD17M3X 200...240 V three phase LXM15LD10N4 230 V three phase LXM15LD10N4 480 V three phase LXM15LD21M3 230 V three phase LXM05AD22N4 380...480 V three phase LXM05BD22N4 380...480 V three phase LXM05CD22N4 380...480 V three phase LXM15LD17N4 400 V three phase LXM15LD17N4 480 V three phase LXM32.D18N4 400 V three phase LXM32.D18N4 480 V three phase

Shaft end	Keyed
IP Degree of Protection	IP65 standard IP67 with IP67 kit
Speed feedback resolution	131072 points/turn x 4096 turns
Holding brake	With
Mounting Support	International standard flange
Electrical Connection	Rotatable right-angled connectors

Complementary

Range Compatibility	Lexium 32 Lexium 05 Lexium 15
supply voltage max	480 V
Phase	Three phase
Continuous stall current	4.8 A
maximum continuous power	2.51 W
Maximum current Irms	17.1 A LXM15LD13M3 17.1 A LXM15LD21M3 17.1 A LXM15LD10N4 17.1 A LXM15LD17N4 17.1 A LXM05AD28M2 17.1 A LXM05AD17M3X 17.1 A LXM05AD22N4 17.1 A LXM05BD28M2 17.1 A LXM05BD17M3X 17.1 A LXM05BD22N4 17.1 A LXM05CD28M2 17.1 A LXM05CD17M3X 17.1 A LXM05CD22N4 17.1 A LXM32.D18N4
Maximum permanent current	17.1 A
Switching frequency	8 kHz
Second shaft	Without second shaft end
Shaft diameter	0.7 in (19 mm)
Shaft length	1.6 in (40 mm)
key width	1.2 in (30 mm)
Feedback type	Multiturn SinCos Hiperface
Holding torque	79.7 lbf.in (9 N.m) holding brake
Motor flange size	3.9 in (100 mm)
Number of motor stacks	2
Torque constant	1.21 N.m/A 248 °F (120 °C)
Back emf constant	77 V/krpm 248 °F (120 °C)
Number of motor poles	8
Rotor inertia	2.928 kg.cm²
Stator resistance	2.4 Ohm 68 °F (20 °C)
Stator inductance	12.7 mH 68 °F (20 °C)
Stator electrical time constant	5.29 ms 68 °F (20 °C)

Maximum radial force Fr	620 N 4000 rpm 690 N 3000 rpm 790 N 2000 rpm 990 N 1000 rpm
Maximum axial force Fa	0.2 x Fr
Brake pull-in power	18 W
type of cooling	Natural convection
Length	9.3 in (235.5 mm)
Centring collar diameter	3.7 in (95 mm)
centring collar depth	0.1 in (3.5 mm)
Number of mounting holes	4
Mounting holes diameter	0.4 in (9 mm)
Circle diameter of the mounting holes	4.5 in (115 mm)
Net Weight	13.9 lb(US) (6.3 kg)

Ordering and shipping details

Category	US1PC5318282
Discount Schedule	PC53
GTIN	3389118139411
Returnability	No
Country of origin	DE

Packing Units

Unit Type of Package 1	PCE
Number of Units in Package 1	1
Package 1 Height	6.06 in (15.400 cm)
Package 1 Width	6.42 in (16.300 cm)
Package 1 Length	16.02 in (40.700 cm)
Package 1 Weight	14.220 lb(US) (6.450 kg)
Unit Type of Package 2	S04
Number of Units in Package 2	2
Package 2 Height	11.81 in (30.000 cm)
Package 2 Width	15.75 in (40.000 cm)
Package 2 Length	23.62 in (60.000 cm)
Package 2 Weight	29.873 lb(US) (13.550 kg)
Unit Type of Package 3	P12
Number of Units in Package 3	16
Package 3 Height	35.43 in (90.000 cm)
Package 3 Width	31.50 in (80.000 cm)
Package 3 Length	47.24 in (120.000 cm)
Package 3 Weight	265.437 lb(US) (120.400 kg)

Contractual warranty

Warranty	18 months

Environmental Data

Schneider Electric aims to achieve Net Zero status by 2050 through supply chain partnerships, lower impact materials, and circularity via our ongoing “Use Better, Use Longer, Use Again” campaign to extend product lifetimes and recyclability.

Environmental Data explained >

How we assess product sustainability >

Environmental footprint

Carbon footprint (kg CO2 eq, Total Life cycle)	2354
Environmental Disclosure	Product Environmental Profile

Use Better

Materials and Substances

Packaging made with recycled cardboard	Yes
Packaging without single use plastic	No
China RoHS Regulation	China RoHS declaration
California proposition 65	WARNING: This product can expose you to chemicals including: Lead and lead compounds, which is known to the State of California to cause cancer and birth defects or other reproductive harm. For more information go to www.P65Warnings.ca.gov
PVC free	Yes

Use Again

Repack and remanufacture

Circularity Profile	No need of specific recycling operations
WEEE	The product must be disposed on European Union markets following specific waste collection and never end up in rubbish bins.
Take-back	No

Dimensions Drawings

Servo Motors Dimensions

Example with Straight Connectors

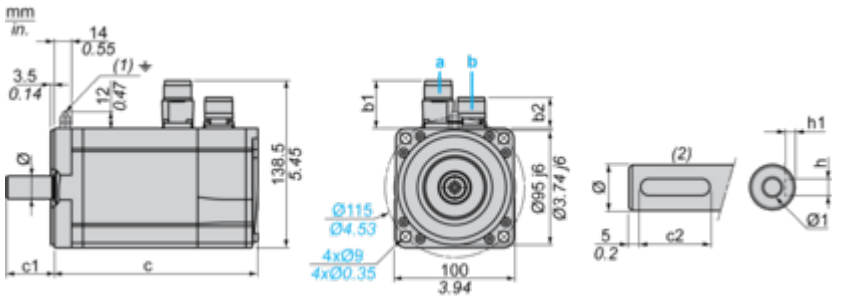

a: Power supply for servo motor brake
b: Power supply for servo motor encoder
(1) M4 screw
(2) Shaft end, keyed slot (optional)
Dimensions in mm

Straight connectors		Rotatable angled connectors		c (without brake)	c (with brake)	c1	c2	h	h1	Ø	Ø1 for screws
b1	b2	b1	b2								
39.5	25.5	39.5	39.5	205	236	40	30	6 N9	$3.5^{+0.1}_{0}$	19 k6	M6 x 16

Dimensions in in.

Straight connectors		Rotatable angled connectors		c (without brake)	c (with brake)	c1	c2	h	h1	Ø	Ø1 for screws
b1	b2	b1	b2								
1.55	1.00	1.55	1.55	8.07	9.29	1.57	1.18	0.24 N9	$0.14^{+0.1}_{0}$	0.75 k6	M6 x 0.63

Performance Curves

400 V 3-Phase Supply Voltage

Torque/Speed Curves

Servo motor with LXM32•D18N4 servo drive

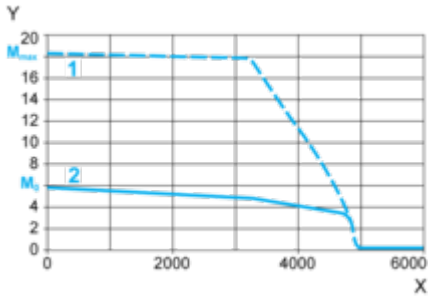

X Speed in rpm
Y Torque in Nm
1 Peak torque
2 Continuous torque

480 V 3-Phase Supply Voltage

Torque/Speed Curves

Servo motor with LXM32•D18N4 servo drive

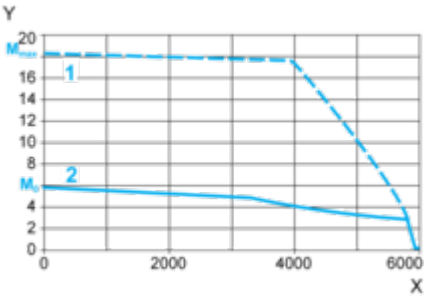

X Speed in rpm
Y Torque in Nm
1 Peak torque
2 Continuous torque