Product data sheet

Specifications



servo motor BSH, Lexium 05, 5.5N.m, 4000rpm, 100mm, untapped shaft, Sincos single turn, without brake, IP50

BSH1002T01A2A

Product availability: Non-Stock - Not normally stocked in distribution facility

Main

Device short name	BSH
Product or Component Type	Servo motor
Maximum mechanical speed	6000 rpm
Continuous stall torque	51.3 lbf.in (5.8 N.m) LXM32.D30M2 10 A, 230 V, single phase 48.7 lbf.in (5.5 N.m) LXM15LD28M3, 230 V, three phase 48.7 lbf.in (5.5 N.m) LXM05AD42M3X, 200...240 V, three phase 48.7 lbf.in (5.5 N.m) LXM05BD42M3X, 200...240 V, three phase 48.7 lbf.in (5.5 N.m) LXM05CD42M3X, 200...240 V, three phase
Peak stall torque	145.2 lbf.in (16.4 N.m) LXM32.D30M2 10 A, 230 V, single phase 102.58 lbf.in (11.59 N.m) LXM15LD28M3, 230 V, three phase 141.6 lbf.in (16 N.m) LXM05AD42M3X, 200...240 V, three phase 141.6 lbf.in (16 N.m) LXM05BD42M3X, 200...240 V, three phase 141.6 lbf.in (16 N.m) LXM05CD42M3X, 200...240 V, three phase
Nominal output power	1500 W LXM32.D30M2 10 A, 230 V, single phase 1400 W LXM05AD42M3X, 200...240 V, three phase 1400 W LXM05BD42M3X, 200...240 V, three phase 1400 W LXM05CD42M3X, 200...240 V, three phase 1700 W LXM15LD28M3, 230 V, three phase
Nominal torque	32.7 lbf.in (3.7 N.m) LXM32.D30M2 10 A, 230 V, single phase 35.4 lbf.in (4 N.m) LXM15LD28M3, 230 V, three phase 38.9 lbf.in (4.4 N.m) LXM05AD42M3X, 200...240 V, three phase 38.9 lbf.in (4.4 N.m) LXM05BD42M3X, 200...240 V, three phase 38.9 lbf.in (4.4 N.m) LXM05CD42M3X, 200...240 V, three phase
Nominal speed	4000 rpm LXM32.D30M2 10 A, 230 V, single phase 3000 rpm LXM05AD42M3X, 200...240 V, three phase 3000 rpm LXM05BD42M3X, 200...240 V, three phase 3000 rpm LXM05CD42M3X, 200...240 V, three phase 4000 rpm LXM15LD28M3, 230 V, three phase
Product compatibility	LXM32.D30M2 230 V single phase LXM05AD42M3X 200...240 V three phase LXM05BD42M3X 200...240 V three phase LXM05CD42M3X 200...240 V three phase LXM15LD28M3 230 V three phase
Shaft end	Untapped
IP Degree of Protection	IP50 standard
Speed feedback resolution	131072 points/turn
Holding brake	Without
Mounting Support	International standard flange
Electrical Connection	Rotatable right-angled connectors

Complementary

Price is “List Price” and may be subject to a trade discount – check with your local distributor or retailer for actual price.

Disclaimer: This documentation is not intended as a substitute for and is not to be used for determining suitability or reliability of these products for specific user applications

Range Compatibility	Lexium 32 Lexium 05 Lexium 15
supply voltage max	480 V
Phase	Three phase
Continuous stall current	9.9 A
maximum continuous power	2.51 W
Maximum current Irms	31.2 A LXM15LD28M3 35.4 A LXM05AD42M3X 35.4 A LXM05BD42M3X 35.4 A LXM05CD42M3X 30 A LXM32.D30M2
Maximum permanent current	35.4 A
Switching frequency	8 kHz
Second shaft	Without second shaft end
Shaft diameter	0.7 in (19 mm)
Shaft length	1.6 in (40 mm)
Feedback type	Single turn SinCos Hiperface
Motor flange size	3.9 in (100 mm)
Number of motor stacks	2
Torque constant	0.59 N.m/A 248 °F (120 °C)
Back emf constant	37 V/krpm 248 °F (120 °C)
Number of motor poles	8
Rotor inertia	2.31 kg.cm²
Stator resistance	0.56 Ohm 68 °F (20 °C)
Stator inductance	3 mH 68 °F (20 °C)
Stator electrical time constant	5.36 ms 68 °F (20 °C)
Maximum radial force Fr	620 N 4000 rpm 690 N 3000 rpm 790 N 2000 rpm 990 N 1000 rpm
Maximum axial force Fa	0.2 x Fr
type of cooling	Natural convection
Length	8.05 in (204.5 mm)
Centring collar diameter	3.7 in (95 mm)
centring collar depth	0.1 in (3.5 mm)
Number of mounting holes	4
Mounting holes diameter	0.4 in (9 mm)
Circle diameter of the mounting holes	4.5 in (115 mm)
Net Weight	13.007 lb(US) (5.9 kg)

Ordering and shipping details

Category	US1PC5318282
Discount Schedule	PC53
GTIN	3389118139435

Returnability	No
Country of origin	DE

Packing Units

Unit Type of Package 1	PCE
Number of Units in Package 1	1
Package 1 Height	6.06 in (15.400 cm)
Package 1 Width	6.42 in (16.300 cm)
Package 1 Length	16.02 in (40.700 cm)
Package 1 Weight	12.787 lb(US) (5.800 kg)
Unit Type of Package 2	S04
Number of Units in Package 2	2
Package 2 Height	11.81 in (30 cm)
Package 2 Width	15.75 in (40 cm)
Package 2 Length	23.62 in (60 cm)
Package 2 Weight	27.007 lb(US) (12.250 kg)
Unit Type of Package 3	P06
Number of Units in Package 3	8
Package 3 Height	29.53 in (75.000 cm)
Package 3 Width	31.50 in (80.000 cm)
Package 3 Length	23.62 in (60.000 cm)
Package 3 Weight	125.664 lb(US) (57.000 kg)

Contractual warranty

Warranty	18 months

Environmental Data

Schneider Electric aims to achieve Net Zero status by 2050 through supply chain partnerships, lower impact materials, and circularity via our ongoing “Use Better, Use Longer, Use Again” campaign to extend product lifetimes and recyclability.

Environmental Data explained >

How we assess product sustainability >

Environmental footprint

Carbon footprint (kg CO2 eq, Total Life cycle)	1868
Environmental Disclosure	Product Environmental Profile

Use Better

Materials and Substances

Packaging made with recycled cardboard	Yes
Packaging without single use plastic	No
China RoHS Regulation	China RoHS declaration
California proposition 65	WARNING: This product can expose you to chemicals including: Lead and lead compounds, which is known to the State of California to cause cancer and birth defects or other reproductive harm. For more information go to www.P65Warnings.ca.gov
PVC free	Yes

Use Again

Repack and remanufacture

Circularity Profile	No need of specific recycling operations
WEEE	The product must be disposed on European Union markets following specific waste collection and never end up in rubbish bins.
Take-back	No

Dimensions Drawings

Servo Motors Dimensions

Example with Straight Connectors

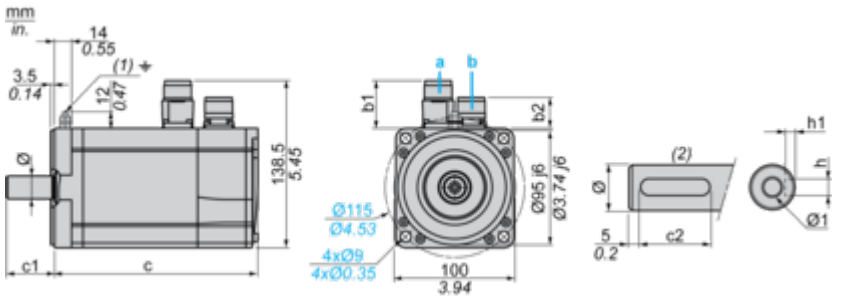

a: Power supply for servo motor brake
b: Power supply for servo motor encoder
(1) M4 screw
(2) Shaft end, keyed slot (optional)
Dimensions in mm

Straight connectors		Rotatable angled connectors		c (without brake)	c (with brake)	c1	c2	h	h1	Ø	Ø1 for screws
b1	b2	b1	b2								
39.5	25.5	39.5	39.5	205	236	40	30	6 N9	$3.5^{+0.1}_{0}$	19 k6	M6 x 16

Dimensions in in.

Straight connectors		Rotatable angled connectors		c (without brake)	c (with brake)	c1	c2	h	h1	Ø	Ø1 for screws
b1	b2	b1	b2								
1.55	1.00	1.55	1.55	8.07	9.29	1.57	1.18	0.24 N9	$0.14^{+0.1}_{0}$	0.75 k6	M6 x 0.63

Performance Curves

230 V Single-Phase Supply Voltage

Torque/Speed Curves

Servo motor with LXM32•D30M2 servo drive

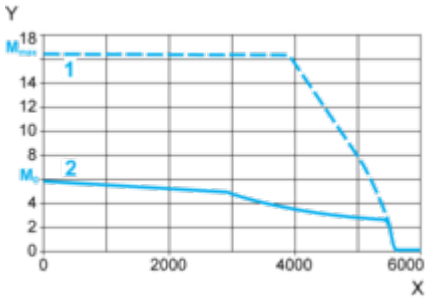

X Speed in rpm
Y Torque in Nm
1 Peak torque
2 Continuous torque