Product data sheet

Specifications



servo motor BSH, Lexium 05, 7.8N.m, 2500rpm, 100mm, keyed shaft, Sincos single turn, with brake, IP50

BSH1003P11F2A

Product availability: Stock - Normally stocked in distribution facility

Main

Device short name	BSH
Product or Component Type	Servo motor
Maximum mechanical speed	6000 rpm
Continuous stall torque	70.8 lbf.in (8 N.m) LXM32.D30N4 10 A, 400 V, three phase 70.8 lbf.in (8 N.m) LXM32.D30N4 10 A, 480 V, three phase 69.04 lbf.in (7.8 N.m) LXM05CD28M2, 200...240 V, single phase 69.04 lbf.in (7.8 N.m) LXM05AD28M2, 200...240 V, single phase 69.04 lbf.in (7.8 N.m) LXM05BD28M2, 200...240 V, single phase 69.04 lbf.in (7.8 N.m) LXM05BD34N4, 380...480 V, three phase 69.04 lbf.in (7.8 N.m) LXM05BD42M3X, 200...240 V, three phase 69.04 lbf.in (7.8 N.m) LXM05CD34N4, 380...480 V, three phase 69.04 lbf.in (7.8 N.m) LXM05CD42M3X, 200...240 V, three phase 59.3 lbf.in (6.7 N.m) LXM15LD21M3, 230 V, three phase 59.3 lbf.in (6.7 N.m) LXM15LD17N4, 230 V, three phase 59.3 lbf.in (6.7 N.m) LXM15LD17N4, 400 V, three phase 59.3 lbf.in (6.7 N.m) LXM15LD17N4, 480 V, three phase 69.04 lbf.in (7.8 N.m) LXM15LD28M3, 230 V, three phase 69.04 lbf.in (7.8 N.m) LXM15MD28N4, 400 V, three phase 69.04 lbf.in (7.8 N.m) LXM15MD28N4, 480 V, three phase 69.04 lbf.in (7.8 N.m) LXM15MD40N4, 400 V, three phase 69.04 lbf.in (7.8 N.m) LXM15MD40N4, 480 V, three phase 69.04 lbf.in (7.8 N.m) LXM05AD34N4, 380...480 V, three phase 69.04 lbf.in (7.8 N.m) LXM05AD42M3X, 200...240 V, three phase
Peak stall torque	250.5 lbf.in (28.3 N.m) LXM32.D30N4 10 A, 400 V, three phase 250.5 lbf.in (28.3 N.m) LXM32.D30N4 10 A, 480 V, three phase 174.27 lbf.in (19.69 N.m) LXM05AD28M2, 200...240 V, single phase 174.27 lbf.in (19.69 N.m) LXM05BD28M2, 200...240 V, single phase 174.27 lbf.in (19.69 N.m) LXM05CD28M2, 200...240 V, single phase 137.2 lbf.in (15.5 N.m) LXM15LD21M3, 230 V, three phase 110.6 lbf.in (12.5 N.m) LXM15LD17N4, 230 V, three phase 110.6 lbf.in (12.5 N.m) LXM15LD17N4, 400 V, three phase 110.6 lbf.in (12.5 N.m) LXM15LD17N4, 480 V, three phase 174.27 lbf.in (19.69 N.m) LXM15LD28M3, 230 V, three phase 174.27 lbf.in (19.69 N.m) LXM15MD28N4, 400 V, three phase 174.27 lbf.in (19.69 N.m) LXM15MD28N4, 480 V, three phase 205.07 lbf.in (23.17 N.m) LXM15MD40N4, 400 V, three phase 205.07 lbf.in (23.17 N.m) LXM15MD40N4, 480 V, three phase 203.66 lbf.in (23.01 N.m) LXM05AD34N4, 380...480 V, three phase 205.07 lbf.in (23.17 N.m) LXM05AD42M3X, 200...240 V, three phase 203.66 lbf.in (23.01 N.m) LXM05BD34N4, 380...480 V, three phase 205.07 lbf.in (23.17 N.m) LXM05BD42M3X, 200...240 V, three phase 203.66 lbf.in (23.01 N.m) LXM05CD34N4, 380...480 V, three phase 205.07 lbf.in (23.17 N.m) LXM05CD42M3X, 200...240 V, three phase

Disclaimer: This documentation is not intended as a substitute for and is not to be used for determining suitability or reliability of these products for specific user applications

Price is “List Price” and may be subject to a trade discount – check with your local distributor or retailer for actual price.

Nominal output power	2000 W LXM32.D30N4 10 A, 400 V, three phase 2600 W LXM32.D30N4 10 A, 480 V, three phase 1100 W LXM05AD28M2, 200...240 V, single phase 1100 W LXM05BD28M2, 200...240 V, single phase 1100 W LXM05CD28M2, 200...240 V, single phase 1100 W LXM05AD42M3X, 200...240 V, three phase 1100 W LXM05BD42M3X, 200...240 V, three phase 1100 W LXM05CD42M3X, 200...240 V, three phase 1300 W LXM15LD28M3, 230 V, three phase 1700 W LXM15LD17N4, 230 V, three phase 1700 W LXM15LD21M3, 230 V, three phase 1800 W LXM05AD34N4, 380...480 V, three phase 1800 W LXM05BD34N4, 380...480 V, three phase 1800 W LXM05CD34N4, 380...480 V, three phase 2000 W LXM15MD28N4, 400 V, three phase 2000 W LXM15MD40N4, 400 V, three phase 2200 W LXM15LD17N4, 400 V, three phase 2200 W LXM15MD28N4, 480 V, three phase 2200 W LXM15MD40N4, 480 V, three phase 2300 W LXM15LD17N4, 480 V, three phase
Nominal torque	55.8 lbf.in (6.3 N.m) LXM32.D30N4 10 A, 400 V, three phase 55.8 lbf.in (6.3 N.m) LXM32.D30N4 10 A, 480 V, three phase 32.7 lbf.in (3.7 N.m) LXM15LD17N4, 480 V, three phase 59.57 lbf.in (6.73 N.m) LXM05AD28M2, 200...240 V, single phase 59.57 lbf.in (6.73 N.m) LXM05BD28M2, 200...240 V, single phase 59.57 lbf.in (6.73 N.m) LXM05CD28M2, 200...240 V, single phase 40.7 lbf.in (4.6 N.m) LXM15MD28N4, 480 V, three phase 40.7 lbf.in (4.6 N.m) LXM15MD40N4, 480 V, three phase 41.6 lbf.in (4.7 N.m) LXM15LD17N4, 400 V, three phase 44.3 lbf.in (5 N.m) LXM15MD28N4, 400 V, three phase 44.3 lbf.in (5 N.m) LXM15MD40N4, 400 V, three phase 50.4 lbf.in (5.7 N.m) LXM05AD34N4, 380...480 V, three phase 50.4 lbf.in (5.7 N.m) LXM05BD34N4, 380...480 V, three phase 50.4 lbf.in (5.7 N.m) LXM05CD34N4, 380...480 V, three phase 53.1 lbf.in (6 N.m) LXM15LD17N4, 230 V, three phase 53.1 lbf.in (6 N.m) LXM15LD21M3, 230 V, three phase 55.8 lbf.in (6.3 N.m) LXM15LD28M3, 230 V, three phase 59.57 lbf.in (6.73 N.m) LXM05AD42M3X, 200...240 V, three phase 59.57 lbf.in (6.73 N.m) LXM05BD42M3X, 200...240 V, three phase 59.57 lbf.in (6.73 N.m) LXM05CD42M3X, 200...240 V, three phase
Nominal speed	3000 rpm LXM32.D30N4 10 A, 400 V, three phase 4000 rpm LXM32.D30N4 10 A, 480 V, three phase 4500 rpm LXM15LD17N4, 400 V, three phase 6000 rpm LXM15LD17N4, 480 V, three phase 1500 rpm LXM05AD28M2, 200...240 V, single phase 1500 rpm LXM05BD28M2, 200...240 V, single phase 1500 rpm LXM05CD28M2, 200...240 V, single phase 1500 rpm LXM05AD42M3X, 200...240 V, three phase 1500 rpm LXM05BD42M3X, 200...240 V, three phase 1500 rpm LXM05CD42M3X, 200...240 V, three phase 2000 rpm LXM15LD28M3, 230 V, three phase 2500 rpm LXM15LD17N4, 230 V, three phase 2500 rpm LXM15LD21M3, 230 V, three phase 3000 rpm LXM05AD34N4, 380...480 V, three phase 3000 rpm LXM05BD34N4, 380...480 V, three phase 3000 rpm LXM05CD34N4, 380...480 V, three phase 4000 rpm LXM15MD28N4, 400 V, three phase 4000 rpm LXM15MD40N4, 400 V, three phase 4500 rpm LXM15MD28N4, 480 V, three phase 4500 rpm LXM15MD40N4, 480 V, three phase

Product compatibility	LXM05AD28M2 200...240 V single phase LXM05BD28M2 200...240 V single phase LXM05CD28M2 200...240 V single phase LXM15LD21M3 230 V three phase LXM05AD42M3X 200...240 V three phase LXM05BD42M3X 200...240 V three phase LXM05CD42M3X 200...240 V three phase LXM15LD17N4 230 V three phase LXM15LD17N4 400 V three phase LXM15LD17N4 480 V three phase LXM15LD28M3 230 V three phase LXM05AD34N4 380...480 V three phase LXM05BD34N4 380...480 V three phase LXM05CD34N4 380...480 V three phase LXM15MD28N4 400 V three phase LXM15MD28N4 480 V three phase LXM15MD40N4 400 V three phase LXM15MD40N4 480 V three phase LXM32.D30N4 400 V three phase LXM32.D30N4 480 V three phase
Shaft end	Keyed
IP Degree of Protection	IP50 standard
Speed feedback resolution	131072 points/turn
Holding brake	With
Mounting Support	International standard flange
Electrical Connection	Rotatable right-angled connectors

Complementary

Range Compatibility	Lexium 15 Lexium 05 Lexium 32
supply voltage max	480 V
Phase	Three phase
Continuous stall current	6.6 A
maximum continuous power	3.14 W
Maximum current Irms	28.3 A LXM15LD21M3 28.3 A LXM15LD28M3 28.3 A LXM15LD17N4 28.3 A LXM15MD28N4 28.3 A LXM15MD40N4 28.3 A LXM05AD28M2 28.3 A LXM05AD42M3X 28.3 A LXM05AD34N4 28.3 A LXM05BD28M2 28.3 A LXM05BD42M3X 28.3 A LXM05BD34N4 28.3 A LXM05CD28M2 28.3 A LXM05CD42M3X 28.3 A LXM05CD34N4 28.3 A LXM32.D30N4
Maximum permanent current	28.3 A
Switching frequency	8 kHz
Second shaft	Without second shaft end
Shaft diameter	0.7 in (19 mm)
Shaft length	1.6 in (40 mm)
key width	1.2 in (30 mm)
Feedback type	Single turn SinCos Hiperface
Holding torque	79.7 lbf.in (9 N.m) holding brake

Motor flange size	3.9 in (100 mm)
Number of motor stacks	3
Torque constant	1.22 N.m/A 248 °F (120 °C)
Back emf constant	77 V/krpm 248 °F (120 °C)
Number of motor poles	8
Rotor inertia	3.838 kg.cm²
Stator resistance	1.43 Ohm 68 °F (20 °C)
Stator inductance	8.8 mH 68 °F (20 °C)
Stator electrical time constant	6.15 ms 68 °F (20 °C)
Maximum radial force Fr	1050 N 1000 rpm 660 N 4000 rpm 730 N 3000 rpm 830 N 2000 rpm
Maximum axial force Fa	0.2 x Fr
Brake pull-in power	18 W
type of cooling	Natural convection
Length	10.7 in (271.5 mm)
Centring collar diameter	3.7 in (95 mm)
centring collar depth	0.1 in (3.5 mm)
Number of mounting holes	4
Mounting holes diameter	0.4 in (9 mm)
Circle diameter of the mounting holes	4.5 in (115 mm)
Net Weight	17.6 lb(US) (8 kg)

Ordering and shipping details

Category	US1PC5318282
Discount Schedule	PC53
GTIN	3389118140240
Returnability	No
Country of origin	DE

Packing Units

Unit Type of Package 1	PCE
Number of Units in Package 1	1
Package 1 Height	7.87 in (20.000 cm)
Package 1 Width	10.24 in (26.000 cm)
Package 1 Length	23.62 in (60.000 cm)
Package 1 Weight	21.341 lb(US) (9.680 kg)
Unit Type of Package 2	P06
Number of Units in Package 2	4
Package 2 Height	29.53 in (75.000 cm)
Package 2 Width	31.50 in (80.000 cm)

Package 2 Length	23.62 in (60.000 cm)
Package 2 Weight	103.00005 lb(US) (46.720 kg)

Contractual warranty

Warranty	18 months

Environmental Data

Schneider Electric aims to achieve Net Zero status by 2050 through supply chain partnerships, lower impact materials, and circularity via our ongoing “Use Better, Use Longer, Use Again” campaign to extend product lifetimes and recyclability.

Environmental Data explained >

How we assess product sustainability >

Environmental footprint

Carbon footprint (kg CO2 eq, Total Life cycle)	2852
Environmental Disclosure	Product Environmental Profile

Use Better

Materials and Substances

EU RoHS Directive	Pro-active compliance (Product out of EU RoHS legal scope)
REACh Regulation	REACh Declaration
California proposition 65	WARNING: This product can expose you to chemicals including: Lead and lead compounds, which is known to the State of California to cause cancer and birth defects or other reproductive harm. For more information go to www.P65Warnings.ca.gov
PVC free	Yes

Use Again

Repack and remanufacture

Circularity Profile	No need of specific recycling operations
WEEE	The product must be disposed on European Union markets following specific waste collection and never end up in rubbish bins.
Take-back	No

Dimensions Drawings

Servo Motors Dimensions

Example with Straight Connectors

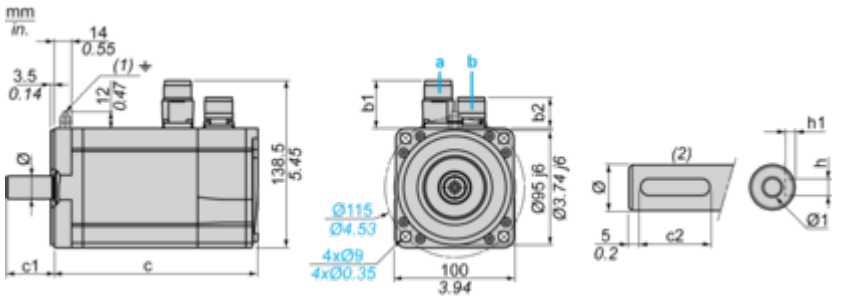

a: Power supply for servo motor brake
b: Power supply for servo motor encoder
(1) M4 screw
(2) Shaft end, keyed slot (optional)
Dimensions in mm

Straight connectors		Rotatable angled connectors		c (without brake)	c (with brake)	c1	c2	h	h1	Ø	Ø1 for screws
b1	b2	b1	b2								
39.5	25.5	39.5	39.5	241	272	40	30	6 N9	$3.5^{+0.1}_{0}$	19 k6	M6 x 16

Dimensions in in.

Straight connectors		Rotatable angled connectors		c (without brake)	c (with brake)	c1	c2	h	h1	Ø	Ø1 for screws
b1	b2	b1	b2								
1.55	1.00	1.55	1.55	9.48	10.70	1.57	1.18	0.24 N9	$0.14^{+0.1}_{0}$	0.75 k6	M6 x 0.63

Performance Curves

400 V 3-Phase Supply Voltage

Torque/Speed Curves

Servo motor with LXM32•D30N4 servo drive

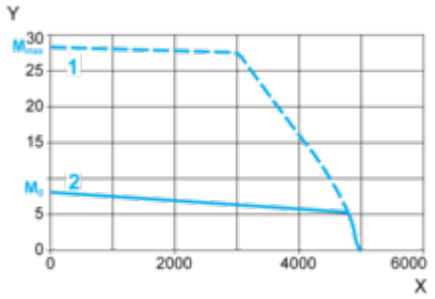

X Speed in rpm
Y Torque in Nm
1 Peak torque
2 Continuous torque

480 V 3-Phase Supply Voltage

Torque/Speed Curves

Servo motor with LXM32•D30N4 servo drive

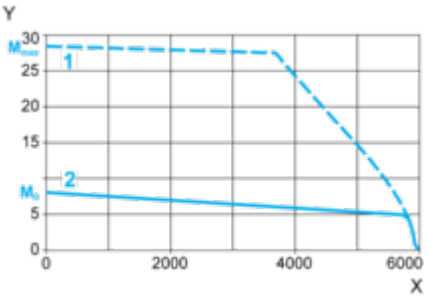

X Speed in rpm
Y Torque in Nm
1 Peak torque
2 Continuous torque