Product data sheet

Specifications



motion servo drive, Lexium 32, 9A, single phase, supply voltage 115 to 230V, 0.3 to 0.5kW

LXM32MU90M2

Product availability: Non-Stock - Not normally stocked in distribution facility

Main

Range of Product	Lexium 32
Device short name	LXM32M
Product or Component Type	Motion servo drive
Format of the drive	Book
Phase	Single phase
[Us] rated supply voltage	100...120 V - 15...10 % 200...240 V - 15...10 %
Supply voltage limits	85…132 V 170…264 V
Supply frequency	50/60 Hz - 5...5 %
Network Frequency	47.5...63 Hz
EMC filter	Integrated
Continuous output current	3 A 8 kHz
Output current 3s peak	6 A 115 V 5 s 9 A 230 V 5 s
maximum continuous power	400 W 115 V 900 W 230 V
Nominal power	0.3 kW 115 V 8 kHz 0.5 kW 230 V 8 kHz
Line current	5.2 A 90 % 115 V, with external line choke 2 mH 6.3 A 107 % 230 V, with external line choke 2 mH 5.4 A 159 % 115 V, without line choke 4.5 A 166 % 230 V, without line choke

Complementary

Switching frequency	8 kHz
Overvoltage category	III
Maximum leakage current	30 mA
Output voltage	<= power supply voltage
Electrical isolation	Between power and control
Type of cable	Single-strand IEC cable 122 °F (50 °C)) copper 90 °C XLPE/EPR
Electrical connection	Terminal 3 mm², AWG 12 CN8) Terminal 5 mm², AWG 10 CN1) Terminal 5 mm², AWG 10 CN10)
Tightening torque	CN8 4.4 lbf.in (0.5 N.m) CN1 6.2 lbf.in (0.7 N.m) CN10 6.2 lbf.in (0.7 N.m)

Price is “List Price” and may be subject to a trade discount – check with your local distributor or retailer for actual price.

Disclaimer: This documentation is not intended as a substitute for and is not to be used for determining suitability or reliability of these products for specific user applications

Discrete input number	2 capture 2 safety 4 logic
Discrete input type	Capture CAP Logic DI Safety compliment of STO_A, compliment of STO_B
Sampling duration	DI 0.25 ms discrete 0.25 ms
Discrete input voltage	24 V DC capture 24 V DC logic 24 V DC safety
Discrete input logic	Positive compliment of STO_A, compliment of STO_B)< 5 V > 15 V EN/IEC 61131-2 type 1 Positive DI)> 19 V < 9 V EN/IEC 61131-2 type 1 Positive or negative DI)< 5 V > 15 V EN/IEC 61131-2 type 1
Response time	<= 5 ms compliment of STO_A, compliment of STO_B
Discrete output number	3
Discrete output type	Logic DO)24 V DC
Discrete output voltage	<= 30 V DC
Discrete output logic	Positive or negative DO)EN/IEC 61131-2
Contact bounce time	<= 1 ms compliment of STO_A, compliment of STO_B 2 µs CAP 0.25 µs...1.5 ms DI
Braking current	50 mA
Response time on output	250 µs DO)discrete
Control signal type	Servo motor encoder feedback Pulse train output (PTO) RS422 <500 kHz <328.08 ft (100 m) Pulse/direction (P/D), A/B, CW/CCW 5 V, 24 V link (open collector) <10 kHz <3.3 ft (1 m) Pulse/direction (P/D), A/B, CW/CCW 5 V, 24 V link (push-pull) <200 kHz <32.8 ft (10 m) Pulse/direction (P/D), A/B, CW/CCW RS422 <1000 kHz <328.08 ft (100 m)
Protection type	Against reverse polarity inputs signal Against short-circuits outputs signal
Safety function	STO (safe torque off), Integrated SS1 (safe stop 1), with separated eSM safety card SS2 (safe stop 2), with separated eSM safety card SLS (safe limited speed), with separated eSM safety card SOS (safe operating stop), with separated eSM safety card
Safety level	SIL 3 EN/IEC 61508 PL = e ISO 13849-1
Communication interface	Modbus TCP, with separated communication card CANopen, with separated communication card CANmotion, with separated communication card Ethernet/IP, with separated communication card EtherCAT, with separated communication card Profibus, with separated communication card Profinet, with separated communication card Analog I/O, with separated communication card Digital I/O, Integrated
Status LED	1 LED (Red) servo drive voltage
Signalling function	Display of faults 7 segments
Marking	CE
Operating position	Vertical +/- 10 degree

Product compatibility	Servo motor BMH 2.8 in (70 mm), 1 Servo motor BSH 2.8 in (70 mm), 1 Servo motor BSH 2.2 in (55 mm), 3 Servo motor BSH 2.2 in (55 mm), 1 Servo motor BSH 2.2 in (55 mm), 2
Width	2.7 in (68 mm)
Height	10.6 in (270 mm)
Depth	9.3 in (237 mm)
Net Weight	4.0 lb(US) (1.8 kg)

Environment

Electromagnetic compatibility	Conducted EMC, class A group 1 EN 55011 Conducted EMC, class A group 2 EN 55011 Conducted EMC, environment 2 category C3 EN/IEC 61800-3 Conducted EMC, category C2 EN/IEC 61800-3 Conducted EMC, environments 1 and 2 EN/IEC 61800-3 Electrostatic discharge immunity test, level 3 EN/IEC 61000-4-2 Susceptibility to electromagnetic fields, level 3 EN/IEC 61000-4-3 1.2/50 µs shock waves immunity test, level 3 EN/IEC 61000-4-5 Electrical fast transient/burst immunity test, level 4 EN/IEC 61000-4-4 Radiated EMC, class A group 2 EN 55011 Radiated EMC, category C3 EN/IEC 61800-3
Standards	EN/IEC 61800-5-1 EN/IEC 61800-3
Product Certifications	CSA TÜV UL
IP degree of protection	IP20 conforming to EN/IEC 60529 IP20 conforming to EN/IEC 61800-5-1
Vibration resistance	1 gn (f= 13…150 Hz) conforming to EN/IEC 60068-2-6 1.5 mm peak to peak (f= 3…13 Hz) conforming to EN/IEC 60068-2-6
Shock resistance	15 gn 11 ms EN/IEC 60028-2-27
Pollution degree	2 EN/IEC 61800-5-1
Environmental characteristic	Classes 3C1 conforming to IEC 60721-3-3
Relative humidity	Class 3K3 (5 to 85 %) without condensation IEC 60721-3-3
Ambient air temperature for operation	32…122 °F (0…50 °C) UL
Ambient Air Temperature for Storage	-13…158 °F (-25…70 °C)
type of cooling	Natural convection
Operating altitude	<= 3280.84 ft (1000 m) without derating > 3280.84...9842.52 ft (> 1000...3000 m) with conditions

Ordering and shipping details

Category	US1PC5118261
Discount Schedule	PC51
GTIN	3606480076831
Returnability	No
Country of origin	ID

Packing Units

Unit Type of Package 1	PCE
Number of Units in Package 1	1

Package 1 Height	4.33 in (11 cm)
Package 1 Width	10.83 in (27.5 cm)
Package 1 Length	12.99 in (33 cm)
Package 1 Weight	5.168 lb(US) (2.344 kg)
Unit Type of Package 2	S03
Number of Units in Package 2	2
Package 2 Height	11.81 in (30 cm)
Package 2 Width	11.81 in (30 cm)
Package 2 Length	15.75 in (40 cm)
Package 2 Weight	11.976 lb(US) (5.432 kg)
Unit Type of Package 3	P06
Number of Units in Package 3	16
Package 3 Height	31.50 in (80 cm)
Package 3 Width	31.50 in (80 cm)
Package 3 Length	23.62 in (60 cm)
Package 3 Weight	113.997 lb(US) (51.708 kg)

Contractual warranty

Warranty	18 months

Environmental Data

Schneider Electric aims to achieve Net Zero status by 2050 through supply chain partnerships, lower impact materials, and circularity via our ongoing “Use Better, Use Longer, Use Again” campaign to extend product lifetimes and recyclability.

Environmental Data explained >

How we assess product sustainability >

Environmental footprint

Carbon footprint (kg CO2 eq, Total Life cycle)	796
Environmental Disclosure	Product Environmental Profile

Use Better

Materials and Substances

EU RoHS Directive	Pro-active compliance (Product out of EU RoHS legal scope)
REACh Regulation	REACh Declaration
California proposition 65	WARNING: This product can expose you to chemicals including: Lead and lead compounds, which is known to the State of California to cause cancer and birth defects or other reproductive harm. For more information go to www.P65Warnings.ca.gov
PVC free	Yes

Use Again

Repack and remanufacture

Circularity Profile	End of Life Information
WEEE	The product must be disposed on European Union markets following specific waste collection and never end up in rubbish bins.
Take-back	No

Dimensions Drawings

Lexium 32 Servo Drive

Dimensions

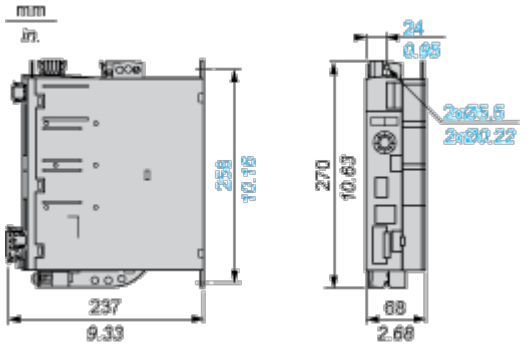

Mounting and Clearance

Lexium 32 Motion Control Servo Drives

Mounting Recommendations

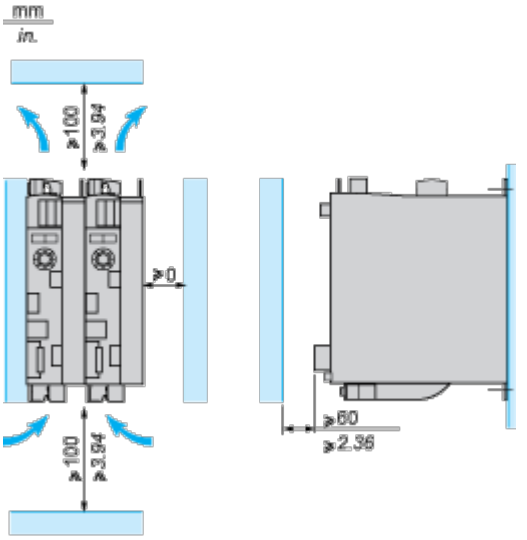

LXM32•U45M2, •U90M2 and LXM32•U60N4 servo drives are cooled by natural convection. LXM32•D18M2, •D30M2, LXM32 •D12N4, •D18N4, •D30N4 and •D72N4servo drives have an integrated fan.
When installing the servo drive in the enclosure, follow the instructions below with regard to the temperature and protection index:

- Provide sufficient cooling of the servo drive
- Do not mount the servo drive near heat sources
- Do not mount the servo drive on flammable materials
- Do not heat the servo drive cooling air by currents of hot air from other equipment and components, for example from an external braking resistor
- Mount the servo drive vertically (± 10%)
- If the servo drive is used above its thermal limits, control stops due to overtemperature

NOTE: For cables that are connected via the underside of the servo drive, a free space ≥ 200 mm/7.87 in. is required under the unit to comply with the bending radius of the connection cables.

Ambient temperature	Mounting distances	Instructions to be followed
0°C…+ 50°C	d ≥ 0 mm	–
+ 50°C…+ 60°C	d ≥ 0 mm	Reduce the output current by 2.2% per °C above 50°C

NOTE: Do not use insulated enclosures, as they have a poor level of conductivity.

Recommendations for Mounting in an Enclosure

To ensure good air circulation in the servo drive:

- Fit ventilation grilles on the enclosure.
- Ensure that ventilation is adequate, otherwise install a forced ventilation unit with a filter.

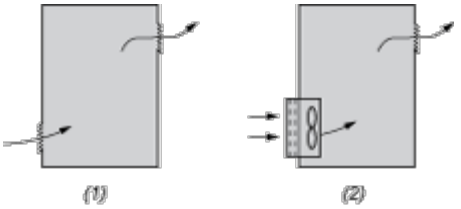

(1) (2)

(1) Natural convection

(2) Forced ventilation

- Any apertures and/or fans must provide a flow rate at least equal to that of the servo drive fans (refer to characteristics).
- Use special filters with IP 54 protection.

Mounting in Metal Enclosure (IP 54 Degree of Protection)

The servo drive must be mounted in a dust and damp proof enclosure in certain environmental conditions, such as dust, corrosive gases, high humidity with risk of condensation and dripping water, splashing liquid, etc. In these cases, Lexium 32 servo drives can be installed in an enclosure where the internal temperature must not exceed 60°C.