Product data sheet
Characteristics

XPSUDN33AC
Safety module, Harmony Safety Automation, Cat.4, features 6*XPSUAF, 48-240v AC/DC, spring



Main

Range of Product	Harmony Safety Automation
Product or Component Type	Safety module
Safety module name	XPSUDN
Safety module application	Monitoring antivalent contacts For emergency stop, guard and light curtain monitoring
Function of module	Emergency stop button with 2 NC contacts Guard monitoring with 1 or 2 limit switches Monitoring 2 PNP sensors Magnetic switch monitoring Light curtain monitoring RFID switch Monitoring of electro-sensitive protection equipment (ESPE) Proximity sensor monitoring
Safety level	Can reach PL e/category 4 for normally open relay contact ISO 13849-1 Can reach SILCL 3 for normally open relay contact IEC 62061 Can reach SIL 3 for normally open relay contact IEC 61508 Can reach PL c/category 1 for normally closed relay contact ISO 13849-1 Can reach SILCL 1 for normally closed relay contact IEC 62061 Can reach SIL 1 for normally closed relay contact IEC 61508
Safety reliability data	MTTFd > 30 years ISO 13849-1 Dcavg >= 99 % ISO 13849-1 PFHd = 1.36E-09 ISO 13849-1 HFT = 1 IEC 62061 PFHd = 1.36E-09 IEC 62061 SFF > 99% IEC 62061 HFT = 1 IEC 61508-1 PFHd = 1.36E-09 IEC 61508-1 SFF > 99% IEC 61508-1 Type = B IEC 61508-1
Electrical circuit type	NC pair PNP pair Antivalent pair OSSD pair
Connections - terminals	Removable spring terminal block, 0.2...2.5 mm² solid or flexible Removable spring terminal block, 0.25...2.5 mm² flexible with ferrule single conductor Removable spring terminal block, 0.2...1.5 mm² solid or flexible twin conductor Removable spring terminal block, 2 x 0.25...1 mm² flexible with ferrule without cable end, with bezel Removable spring terminal block, 2 x 0.5...1.5 mm² flexible with ferrule with cable end, with bezel
[Us] Rated Supply Voltage	48...240 V AC/DC - 10...10 %

The information provided in this documentation contains general descriptions and/or technical characteristics of the performance of the products contained herein.
This documentation is not intended as a substitute for and is not to be used for determining suitability or reliability of these products for specific user applications.
It is the duty of any such user or integrator to perform the appropriate and complete risk analysis, evaluation and testing of the products with respect to the relevant specific application or use thereof.
Neither Schneider Electric Industries SAS nor any of its affiliates or subsidiaries shall be responsible or liable for misuse of the information contained herein.

Complementary

Synchronisation time between inputs	0.5 s 2 s 2.2 s 4 s
Type of start	Automatic/manual/monitored
Power consumption in W	6 W 48 V DC
Power consumption in VA	25 VA 240 V AC 50/60 Hz
Input protection type	Internal, electronic
Safety outputs	3 NO + 1 NC
Safety inputs	6 safety input 24 V DC 5 mA
Maximum wire resistance	500 Ohm
Input compatibility	Normally closed circuit ISO 14119 XC limit switch ISO 14119 Mechanical contact ISO 14119 Normally closed circuit ISO 13850 Antivalent pair ISO 14119 OSSD pair IEC 61496-1-2 3-wire proximity sensors PNP
[Ie] rated operational current	5 A AC-1 for normally open relay contact 3 A AC-15 for normally open relay contact 5 A DC-1 for normally open relay contact 3 A DC-13 for normally open relay contact 3 A AC-1 for normally closed relay contact 1 A AC-15 for normally closed relay contact 3 A DC-1 for normally closed relay contact 1 A DC-13 for normally closed relay contact
Control outputs	7 on/off configurable pulsed output
Input/output type	Semiconductor pulsed diagnostic output 24 V DC, 20 mA Z1, not safety-related
[Ith] conventional free air thermal current	16 A
Associated fuse rating	10 A gG NO relay output circuit IEC 60947-1 4 A gG NC relay output circuit IEC 60947-1
Minimum output current	10 mA relay output
Minimum output voltage	12 V relay output
Maximum response time on input open	20 ms
[Ui] rated insulation voltage	250 V 2)EN/IEC 60947-1
[Uimp] rated impulse withstand voltage	4 kV II EN/IEC 60947-1
Local signalling	For power ON LED (green) For error LED (red) For start LED (yellow) For safety status LED (yellow) For safety input S12 LED (yellow) For safety input S13 LED (yellow) For safety input S22 LED (yellow) For safety input S23 LED (yellow) For safety input S32 LED (yellow) For safety input S33 LED (yellow) For safety input S42 LED (yellow) For safety input S43 LED (yellow) For safety input S52 LED (yellow) For safety input S53 LED (yellow) For safety input S62 LED (yellow) For safety input S73 LED (yellow)
Mounting Support	35 mm symmetrical DIN rail
Depth	4.72 in (120 mm)
Height	3.94 in (100 mm)
Width	1.77 in (45 mm)
Net Weight	0.77 lb(US) (0.350 kg)

Environment

Standards	IEC 60947-5-1 IEC 61508-1 functional safety standard IEC 61508-2 functional safety standard IEC 61508-3 functional safety standard IEC 61508-4 functional safety standard IEC 61508-5 functional safety standard IEC 61508-6 functional safety standard IEC 61508-7 functional safety standard ISO 13849-1 functional safety standard IEC 62061 functional safety standard
Product Certifications	TÜV cULus
IP degree of protection	IP20 terminals)EN/IEC 60947-1 IP40 housing)EN/IEC 60947-1 IP54 mounting area)EN/IEC 60947-1
Ambient air temperature for operation	-13…122 °F (-25…50 °C) at 24 V AC -13…131 °F (-25…55 °C) at 24 V DC
Ambient Air Temperature for Storage	-13…185 °F (-25…85 °C)
Relative Humidity	5…95 % non-condensing

Ordering and shipping details

Category	22477-SAFETY MODULES (PREVENTA)
Discount Schedule	SAF2
GTIN	3606489601744
Returnability	No
Country of origin	ID

Packing Units

Unit Type of Package 1	PCE
Number of Units in Package 1	1
Package 1 Height	2.76 in (7.0 cm)
Package 1 Width	5.51 in (14.0 cm)
Package 1 Length	6.22 in (15.8 cm)
Package 1 Weight	15.03 oz (426.0 g)
Unit Type of Package 2	S03
Number of Units in Package 2	16
Package 2 Height	11.81 in (30.0 cm)
Package 2 Width	11.81 in (30.0 cm)
Package 2 Length	15.75 in (40.0 cm)
Package 2 Weight	16.88 lb(US) (7.655 kg)

Offer Sustainability

Sustainable offer status	Green Premium product
California proposition 65	WARNING: This product can expose you to chemicals including: Lead and lead compounds, which is known to the State of California to cause cancer and birth defects or other reproductive harm. For more information go to www.P65Warnings.ca.gov
REACh Regulation	REACh Declaration
EU RoHS Directive	Pro-active compliance (Product out of EU RoHS legal scope) EU RoHS Declaration
Mercury free	Yes
China RoHS Regulation	China RoHS Declaration
RoHS exemption information	Yes
Environmental Disclosure	Product Environmental Profile
Circularity Profile	End Of Life Information

WEEE	The product must be disposed on European Union markets following specific waste collection and never end up in rubbish bins.
PVC free	Yes

Dimensions

Front and Side Views

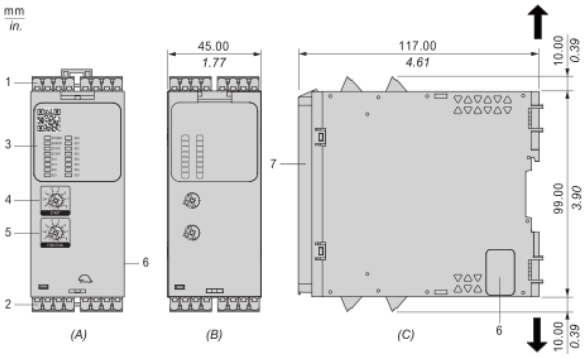

(A) : Product drawing
(B) : Spring Terminal
(C) : Side view
(1) : Removable terminal blocks, top
(2) : Removable terminal blocks, bottom
(3) : LED indicators
(4) : Start function selector
(5) : Function selector
(6) : Connector for optional output extension module (lateral)
(7) : Sealable transparent cover

mm / in. 12.0 / 0.47					
mm^2	0,2...2,5	0,25...2,5	0,2...1,5	0,25...1	0,5...1,5
AWG	*24...12*	*24...12*	*24...16*	*24...18*	*20...16*

Mounting to DIN rail

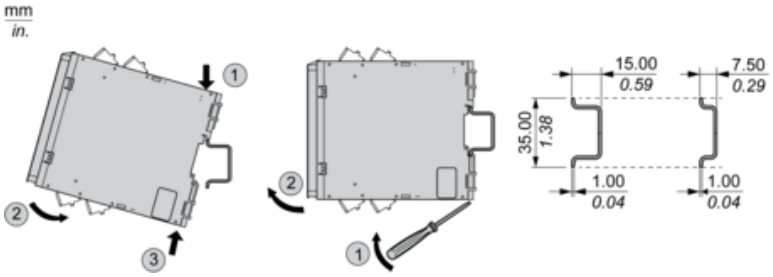

Screw-mounting

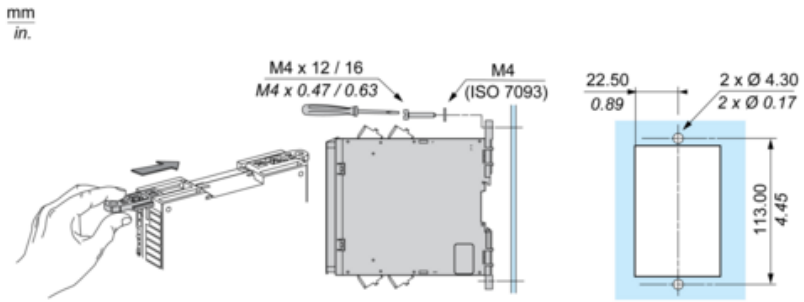

Wiring Drawing

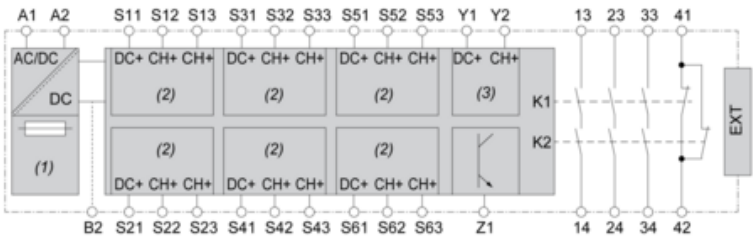

(1) : A1-A2 (Power supply)

(2) : S11-S12-S13-S31-S32-S33-S51-S52-S53-S21-S22-S23-S41-S42-S43-S61-S62-S63 (Single-channel safety input)

(3) : Y1-Y2 (Start)

13-23-33-41-14-24-34-42 : Output

EXT : Connector for optional extension module

B2 : Common ground terminal

Z1 : Pulsed output for diagnostics, not safety-related