Product data sheet
Characteristics

ZB4FD7
Head for selector switch, Harmony XB4, flush mounted black 3 position return left to center



Main

Range of Product	Harmony XB4
Product or Component Type	Head for selector switch
Device short name	ZB4F
Bezel material	Chromium plated metal
Mounting diameter	1.20 in (30.5 mm)
Head type	Built-in-flush
Sale per indivisible quantity	1
Shape of signaling unit head	Round
Type of operator	Left to centre spring return
Operator profile	Black standard handle
Operator position information	3 positions +/- 45°

Complementary

CAD overall width	1.44 in (36.6 mm)
CAD overall height	1.44 in (36.6 mm)
CAD overall depth	1.85 in (47 mm)
Net Weight	0.17 lb(US) (0.078 kg)
Resistance to high pressure washer	1015.26 psi (7000000 Pa) 131 °F (55 °C) 0.1 m
Mechanical durability	1000000 cycles
Electrical composition code	C3 6 single front mounting C4 6 single and double front mounting C5 5 single front mounting C6 5 single and double front mounting C7 4 single front mounting C8 4 single and double front mounting C11 3 single front mounting
Device presentation	Basic element

Environment

Protective treatment	TH
Ambient Air Temperature for Storage	-40…158 °F (-40…70 °C)
Ambient Air Temperature for Operation	-40…158 °F (-40…70 °C)
Overvoltage category	Class I IEC 60536
IP degree of protection	IP66 IEC 60529 IP67 IEC 60529 IP69 IEC 60529 IP69K ISO 20653 Type 13 UL 50 E Type 12 UL 50 E Type 4 UL 50 E Type 4X UL 50 E
IK degree of protection	IK06 IEC 50102

The information provided in this documentation contains general descriptions and/or technical characteristics of the performance of the products contained herein.
This documentation is not intended as a substitute for and is not to be used for determining suitability or reliability of these products for specific user applications.
It is the duty of any such user or integrator to perform the appropriate and complete risk analysis, evaluation and testing of the products with respect to the relevant specific application or use thereof.
Neither Schneider Electric Industries SAS nor any of its affiliates or subsidiaries shall be responsible or liable for misuse of the information contained herein.

Standards	CSA C22.2 No 14 EN/IEC 60947-5-1 EN/IEC 60947-5-4 UL 508 EN/IEC 60947-1 JIS C8201-5-1 CE JIS C8201-1
Product Certifications	UL Listed CSA CCC EAC
Vibration resistance	5 gn 10…500 Hz)IEC 60068-2-6 2 mm peak to peak 2…10 Hz)IEC 60068-2-6
Shock resistance	30 gn 18 ms) half sine wave acceleration IEC 60068-2-27 50 gn 11 ms) half sine wave acceleration IEC 60068-2-27 25 gn 6 ms) 1000 shocks on each axis IEC 60068-2-27

Ordering and shipping details

Category	22468-PUSHBUTTONS,22MM(METAL) NEW
Discount Schedule	CS2
GTIN	3606489581336
Returnability	No

Packing Units

Unit Type of Package 1	PCE
Number of Units in Package 1	1
Package 1 Height	1.69 in (4.3 cm)
Package 1 Width	2.05 in (5.2 cm)
Package 1 Length	2.17 in (5.5 cm)
Package 1 Weight	2.75 oz (78.0 g)

Offer Sustainability

Sustainable offer status	Green Premium product
California proposition 65	WARNING: This product can expose you to chemicals including: Di-isodecyl phthalate (DIDP), which is known to the State of California to cause birth defects or other reproductive harm. For more information go to www.P65Warnings.ca.gov
REACh Regulation	REACh Declaration
REACh free of SVHC	Yes
EU RoHS Directive	Pro-active compliance (Product out of EU RoHS legal scope) EU RoHS Declaration
Toxic heavy metal free	Yes
Mercury free	Yes
China RoHS Regulation	China RoHS Declaration
RoHS exemption information	Yes
Environmental Disclosure	Product Environmental Profile
Circularity Profile	End Of Life Information

Dimensions

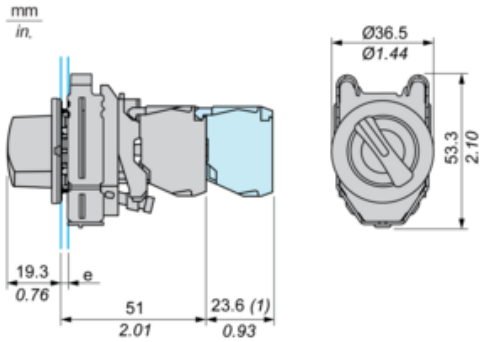

e : clamping thickness: 1 to 6 mm / 0.04 to 0.24 in.

(1) : Additional row of contacts

Panel Cut-out for Pushbuttons, Switches and Pilot Lights (Finished Holes, Ready for Installation)

Connection by Screw Clamp Terminals or Plug-in Connectors

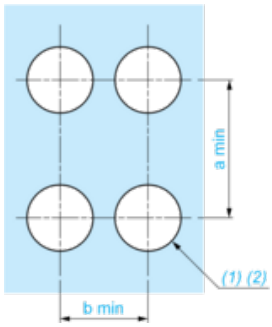

(1) : Diameter on finished panel or support

(2) : Ø30.75 mm recommended (Ø30.5 $_{0}^{+0.5}$) / Ø1.21 in. recommended (Ø1.20 in. $_{0}^{+0.0196}$)

Connections	a in mm	a in in.	b in mm	b in in.
By connectors	50	1.97	40	1.57
By connectors and with legend holder ZBZF32	50	1.97	40	1.57
By connectors and with legend holder ZBZF33	60	2.36	40	1.57

Electrical Composition Corresponding to Code C3

Electrical Composition Corresponding to Code C4

Electrical Composition Corresponding to Code C5

Electrical Composition Corresponding to Code C6

Electrical Composition Corresponding to Code C7

Electrical Composition Corresponding to Code C8

Electrical Composition Corresponding to Codes C9, C11, SF1 and SR1

Legend

Single contact

Double contact

Light block

Possible location



Sequence of Contacts Fitted to 3-position Selector Switch Body

Position 315°



Push	Position	Top			
Bottom					
Location		Left	Centre	Right	
State		1	1	0	
Contacts	N/O		closed	closed	open
N/C		open	open	closed	

Position 0°



Push	Position	Top			
Bottom					
Location		Left	Centre	Right	
State		0	0	0	
Contacts	N/O		open	open	open
N/C		closed	closed	closed	

Position 45°



Push	Position	Top			
Bottom					
Location		Left	Centre	Right	
State		0	1	1	
Contacts	N/O		open	closed	closed
N/C		closed	open	open	