Compensated High Current Choke, 1-phase

new



See below:
Approvals and Compliances

Description

- Current compensated choke
- 1-phase choke
- THT-terminals
- Flange for mounting onto printed circuit board

Unique Selling Proposition

- Ultrahigh current
- High DC voltage
- Open design optimizes heat dissipation
- Optional customized versions

Applications

- Frequency converter
- Charge stations
- Energy
- Photovoltaics
- Energy storage systems

References

Weblinks

pdf data sheet, html datasheet, General Product Information, Approvals, Distributor-Stock-Check, Detailed request for product, SPICE Library, Landing Page

Technical Data

	250 VAC
	max. 800 VDC
Rated Current	50 - 100 A @ Ta 50 °C
Rated inductance	7 - 24.3 mH, Tol. -30% +50%
Power Operating Frequency	0 - 400 Hz
Terminal Type	THT
Weight	760 - 890 g
Material	UL 94V-0 Plastic

Test Voltage	2500 VDC, 2 sec, winding to winding
Climatic Category	40/100/21 acc. to IEC 60068-1
Allowable Operation Temp.	-40 °C to 100 °C

Approvals and Compliances

Detailed information on product approvals, code requirements, usage instructions and detailed test conditions can be looked up in Details about Approvals

SCHURTER products are designed for use in industrial environments. They have approvals from independent testing bodies according to national and international standards. Products with specific characteristics and requirements such as required in the automotive sector according to IATF 16949, medical technology according to ISO 13485 or in the aerospace industry can be offered exclusively with customer-specific, individual agreements by SCHURTER.

Application standards

Application standards where the product can be used

Organization	Design	Standard	Description
IEC	Suitable for applications acc.	IEC/UL 62368-1	Audio/video, information and communication technology equipment - Part 1: Safety requirements

Compliances

The product complies with following Guide Lines

Identification	Details	Initiator	Description
CE	CE declaration of conformity	SCHURTER AG	The CE marking declares that the product complies with the applicable requirements laid down in the harmonisation of Community legislation on its affixing in accordance with EU Regulation 765/2008.
UKCA	UKCA declaration of conformity	SCHURTER AG	The UKCA marking declares that the product complies with the applicable requirements laid down in the British Amendment of Regulation (EC) 765/2008.
RoHS	RoHS	SCHURTER AG	Directive RoHS 2011/65/EU, Amendment (EU) 2015/863
China RoHS	China RoHS	SCHURTER AG	The law SJ / T 11363-2006 (China RoHS) has been in force since 1 March 2007. It is similar to the EU directive RoHS.
REACH	REACH	SCHURTER AG	On 1 June 2007, Regulation (EC) No 1907/2006 on the Registration, Evaluation, Authorization and Restriction of Chemicals 1 (abbreviated as "REACH") entered into force.

Dimension [mm]

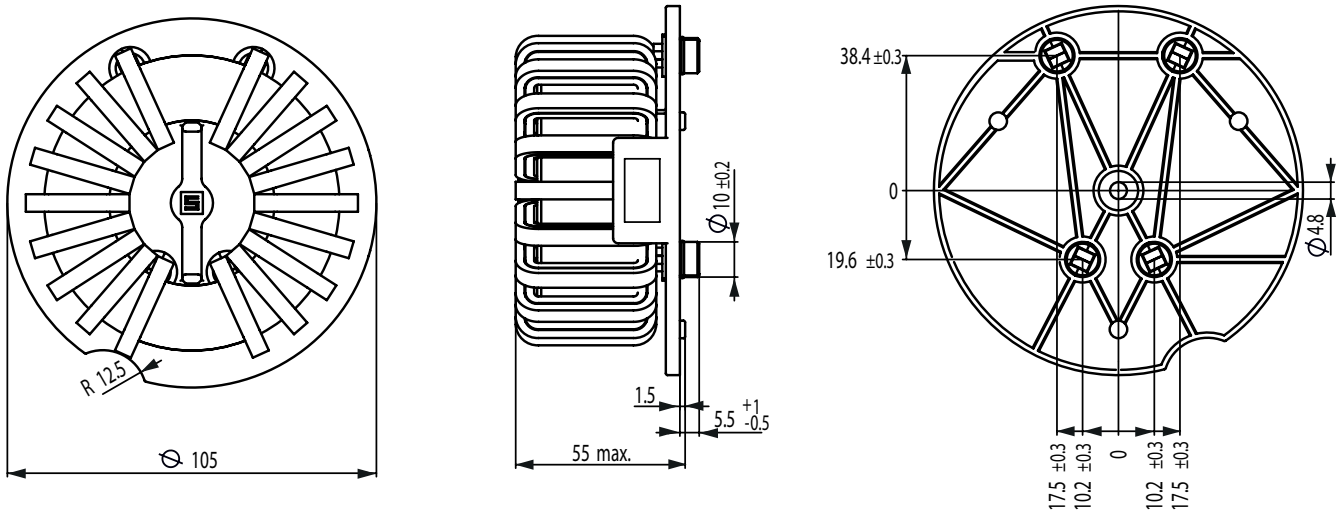

Diagrams

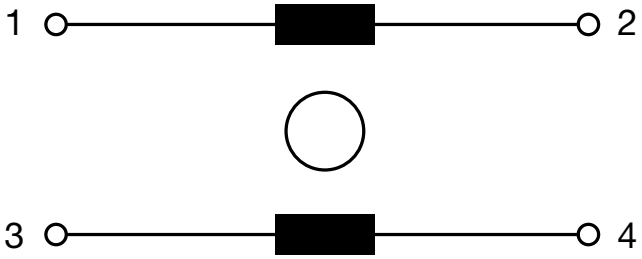

1 phase

Impedance curves

DKUH-1 50A

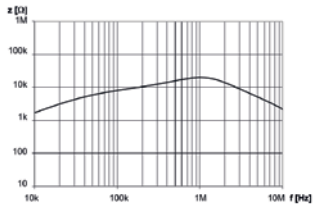

DKUH-1 64A

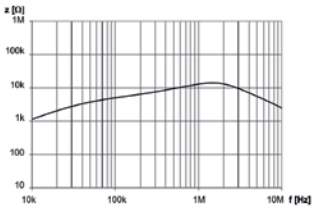

DKUH-1 85A

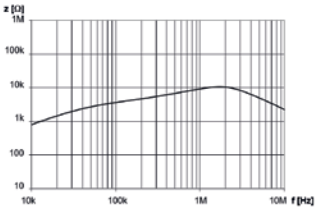

DKUH-1 100A

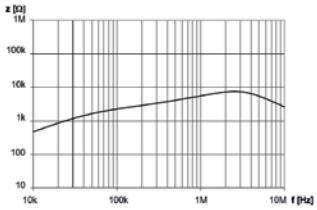

All Variants

I_n [A]	L_n [mH]	R_{cu} [mΩ]	Power Dissipation [W]	f_{RES} [MHz]	Copper ø [mm]	Weight [g]	Packaging unit [PCS]	Order Number
50	24.3	2.5	6.1	1	2.0 x 5.0	760 g	1	3-143-899
64	14.4	1.4	5.8	1.3	2 x 1.5 x 4.5	770 g	1	3-143-900
85	11.5	0.9	6.5	1.6	2 x 2.5 x 5.0	870 g	1	3-143-902
100	7	0.35	3.5	2.5	2 x 2.5 x 5.0	890 g	1	3-143-903

Availability for all products can be searched real-time: https://www.schurter.com/en/info-center/support-tools/stock-check-distributors

19.08.2024

The specifications, descriptions and illustrations indicated in this document are based on current information. All content is subject to modifications and amendments. Information furnished is believed to be accurate and reliable. However, users should independently evaluate the suitability and test each product selected for their own applications.