Product Specifications

Type	:	Reflowable ML Lithium Rechargeable Battery
Model	:	ML414H IV01E

This is a "Standard Spec sheet " which is a general
documentation for your evaluation.
Before we will start to supply this part to you,
we would like you to ask us the formal
version of this spec sheet.
We will issue the formal specification sheet for you.
(Basically the contents is the same as this one.)
We would like you to put your signature on it to state
your approval of the specification, and send it back to us.
It will be a kind of contract between you and us

Seller: Seiko Instruments Inc.
Electronic Components Business Unit
Micro-Energy Division

Sales Dep.

History of Revision

No.	Described by	Details of Change	Checked by	Issue Date
01	QA Dept R.Ito	Initial Release for Standard specifications No.STDE-B-ML0414-0AGIV01E-0014-1	QA Dep H. Ishikawa	Nov.01.2007
02	QA Dept R.Ito	The pocket form of a emboss carrier tape is changed. No. STDE-B-HB0414-0AGV01E-0014-2	QA Dep H. Ishikawa	May.07.2008

Manufacturer information

Company name: Seiko Instruments Inc.
Electronic Components Business Unit
Micro-Energy Division

Address: 45-1, Aza-Matsubara, Kami-ayashi, Aoba-ku, Sendai-shi, Miyagi, Japan, postal code: 989-3124
Quality Assurance Department

Index

Contents	Page
Cover page	1
History of Revision Manufacturer Information	2
Index	3
1. Application	4
2. Model	4
3. Chemical System and Structure	4
4. Nominal Specifications	4
5. Characteristics Electric characteristics Mechanical characteristics Reliability Parameter for Test and Measuring	5
6. Measuring Methods	7
7. Test Methods	8
8. Mounting Conditions	9
9. Indications (Markings)	9
10. Inspection (Outgoing and Incoming)	10
11. Package Specifications	10
12. In case of quality trouble	10
13. Operation of this Specification	10

Appendix
Leakage Criteria
Construction of Battery
Battery drawing with tabs
Explanation for co-planarity
Reflow Profile
Drawing of Emboss Carrier Tape
Battery position in emboss tape
Taping specifications
Package specifications (Overseas)
Precautions for Your Safety

1. Application

This specification applies to the Reflowable ML Lithium Rechargeable Battery, which is manufactured and supplied by Seiko Instruments Inc. to the customer specified in the cover page of this document.

2. Model

Model described in cover.

3. Chemical System and Structure

Refer to the document “The construction of battery” attached.

4. Nominal Specifications

		Model
No.	Characteristics	ML414H
4-1	Range of temperature in which it can be operated	From -20°C to 60°C
4-2	Recommended range of preservation temperature and humidity	From 10°C to 30°C 60%RH or less
4-3	Nominal voltage	3V
4-4	Charging voltage	From 2.7V to 3.1V
4-5	Recommended Charging voltage	From 3.0V to 3.1V
4-6	Nominal capacity: after charging(mAh) From 3.1V to 2.0V	 1.0
4-7	Standard Discharge Current (mA)	0.005
4-8	Nominal dimensions Diameter (mm) Height (mm)	 4.8 1.4
4-9	Standard mass (g)	0.07 (without tabs)
4-10	Applicable Safety Standard	UL1642 (Not acquired)

5. Characteristics

* “Initial” means within one month after deliver.

* Attached “Leakage Criteria” is used for the judgment of leakage.

5-1. Electric characteristics

No.	Characteristics		Model ML414H	Test Methods	Measuring Methods
1	Open Circuit Voltage (V) at delivery			-	6-4
		Maximum	2.8		
		Minimum	2.3		
2	Open Circuit Voltage (V) after charge			-	6-2 1) 2) 6-4
		Maximum	3.1		
		Minimum	2.8		
3	Initial Capacity (mAh)			7-2	6-2
		24°C	0.8 or more		
		-20°C	0.2 or more		
		60°C	0.8 or more		
4	Initial Internal Impedance (ohm)			7-2	6-3
		24°C	1500 or less		
		-20°C	5000 or less		
		60°C	1500 or less		

5-2. Mechanical characteristics

No.	Characteristics		Model ML414H	Test Methods	Measuring Methods
1	Tab Pulling Strength (N): With the terminal			-	6-8
		-	Refer to Battery Drawing with tabs attached		
2	External Appearance				6-9
		Initial	No leakage There must not be foreign body adhesion (over level S2). There is no significant deformation, stain, stricken mark, rust and burr.	-	
		After Tests	There is no significant leakage (over level C1), deformation, stain, stricken mark, rust and burr.	7-3 7-4 7-5	
3	Free fall		Satisfy initial capacity and internal impedance. There is no significant leakage, deformation, stain, stricken mark, rust and burr, which effect battery performance.	7-9	6-2 6-3 6-9
4	Vibration		Satisfy initial capacity and internal impedance. There is no significant leakage, deformation, stain, stricken mark, rust and burr, which effect battery performance.	7-10	6-2 6-3 6-9

5-3. Reliability

No.	Characteristics	Model ML414H	Test Methods	Measuring Methods
1	High Temperature Storage Characteristics		7-3	
	Capacity (mAh)	0.68 or more		6-2
3	Low Temperature Storage Characteristics		7-4	
	Capacity (mAh)	0.70 or more		6-2
3	Float Charge Characteristics		7-5	
	Capacity (mAh)	0.68 or more		6-2
	Internal Impedance (ohm)	3000 or more		6-3
4	Over Discharge Characteristics		7-6	
	Capacity (mAh)	0.68 or more		6-2
5	Charge / Discharge Cycle Characteristics (Cycles)			6-2
	10% D.O.D.	300cycle or more	7-7	
6	Leakage Resistance	Level S3 (*1) or less (There is no significant leakage which effect battery performance.)	7-8	6-9

5-4. Table of Parameter for Test and Measuring

No.	Characteristics		Model ML414H	Test Methods	Measuring Methods
1	Capacity			-	6-2
		Vinit (V)	2.0		
		Vc (V)	3.1		
		Rp (kohm)	3		
		Tc (hrs)	72		
		Rd (kohm)	470		
		Voff (V)	2.0		
2	Float Charge Characteristics			7-5	
		Vc (V)	3.1		
		Rp (kohm)	3		
3	Over Discharge Characteristics			7-6	
		Rs (kohm)	33		
4	Charge / Discharge Cycle			7-7	
		Vc (V)	3.1		
		Rp (kohm)	3		
		Tcs (hrs)	5		
		Rds (kohm)	100		
		Tds (hours)	4		

6. Measuring Methods

6-1. General Conditions

The measuring conditions are temperature of 24+/-2 °C, humidity of 65+/-20%Rh and within one month after delivering, if not specified.

6-2. Capacity

1) Charging: Apply specified voltage (Vc) through the protective resistance (Rp) for specified time (Tc).

2) Discharging: Discharging with load resistance (Rd) until the cell voltage reaches the cut off voltage (Voff), the cell voltage (Vi) and time (Ti) should be measured at intervals within one hour.

3) Calculation: The capacity value is calculated by the expression below.

$$Capacity = \sum_i \left(\frac{(V_i + V_{i+1})}{2} \times \frac{1}{Rd} \times (T_{i+1} - T_i) \right)$$

4) General Circuit: The circuit, for charging and discharging, is shown as follows.

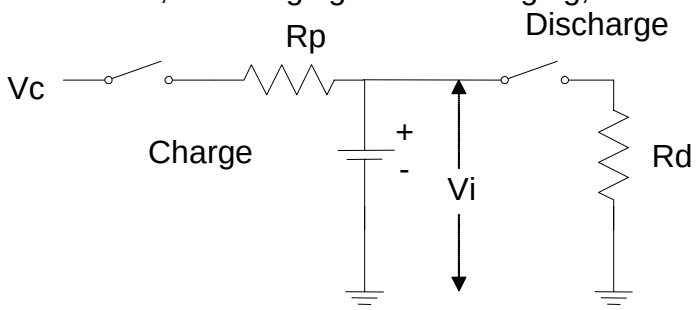

6-3. Internal Impedance

Measure by alternating current method using frequency of 1KHz.

6-4. Voltage

Use a direct current voltage meter, which has input impedance of 10Mohm or more and accuracy of +/-0.2% or less.

6-5. Current

Use an ammeter with accuracy of +/-0.2% or less.

6-6. Resistance

Resistance, which includes resistance of all external circuits, requires accuracy of 2.0% or less.

6-7. Size measurement

Use the size measurement instruments with accuracy of 0.01mm or 0.001mm if necessary.

6-8. Terminal pull strength: The direction of the pull is vertical.

Use a digital force gauge, which has accuracy of +/-1.0% or less.

6-9. Appearance

After Test : Microscope, which has magnification of 10 times.

At delivery : Naked eye

7. Test Methods

7-1. General conditions

If not specified, the test conditions are temperature of 24+/-2 °C, humidity of 65+/-20%Rh and The test should be started within one month after delivering.

7-2. Temperature Characteristics Test

Measure electrical characteristics after exposing battery to each temperature atmosphere for 2 hours.

Temperature: -20+/-2 °C, +24+/-2 °C, +60+/-2 °C

7-3. High Temperature Storage

After Charging at voltage of Vc through protective resistance of Rp for Tc hours, store battery at temperature 60+/-2 °C for 20days.

7-4. Low Temperature Storage

After Charging at voltage of Vc through protective resistance of Rp for Tc hours, store battery at temperature of -40+/-2 °C for 96 hours.

7-5. Float Charge Characteristics Test

Charge battery at voltage of Vc through protective resistance of Rp at temperature of 24+/-2 °C for 30days.

7-6. Over Discharge Characteristics Test

Discharge the battery by discharge resistance of Rs for 30 days.

7-7. Charge / Discharge Cycle Characteristics Test

Charge : Apply specified voltage (Vc) through protective resistance (Rp) for specified period (Tcs).

Discharge : With load resistance (Rds) for specified period (Tds).

The battery is repeated in the above condition. Its closed circuit voltage is 2.00V or more.

7-8. Leakage Resistance (Thermal Shock Test: Air to Air)

Hold battery at -10+/-2 °C for 1 hour then hold it at 60+/-2 °C for 1 hour.

Repeat 100 cycles between above conditions. (Chamber) Not humidity controlled.

7-9. Free Fall Test

Drop the battery ten times in an arbitrary direction on the board of the oak of 3cm in thickness from the height of 75cm. The tabs of battery should be cut before test.

7-10. Vibration Test

Vibrate the battery in the direction of 3(x, y, z) for 30 minutes by 1000 cycles per minute with amplitude of 2mm. The tabs of battery should be cut before test.

8. Mounting Conditions

8-1. Battery with tabs

1) For soldering iron

Use the conditions as follows

	Model
	ML414H
Temperature	260°C or less
Soldering time	Within five seconds

Within above conditions, do not heat battery over 100°C.

Do not solder directly to the battery.

2) Dip soldering

It is possible to apply. Do not heat the battery over 100°C

3) Reflow soldering

It is possible to apply.

Refer to “Reflow Profile” attached.

8-2. Battery without tabs

Use the spring terminal, which meets the specification as follows.

Surface treatment: Nickel plating or Gold plating

Contact force: 0.5N or more

9. Indications (Markings)

9-1. Dies

Following items are indicated on battery.

Below items can be omitted except item (2).

(1) Model code

(2) Cathode polarity (+)

(3) Manufacturer’s name or monogram

(4) Country of origin

9-2. Date of Manufacturing

Date of Manufacturing is marked on the negative tab or the battery (if possible) and label of each package as.

(Example) M51...manufactured in January 2005

M6Y...manufactured in November 2006

M70...manufactured in October 2007

Abbreviation of month: Jan. (1), Feb. (2).... Sep. (9), Oct. (0), Nov. (Y), Dec. (Z)

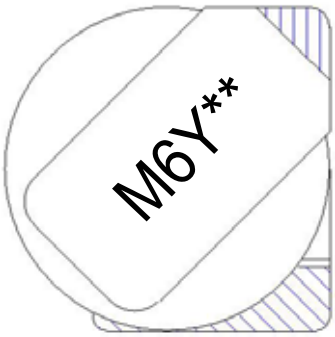

**is our own number, and might be omitted.

Method of marking of manufacturing date is laser type.

10. Inspection (Outgoing and Incoming)

10-1. Lot composition

Lot must be composed within the same manufacturing conditions.

10-2. Outgoing Inspection

Seiko Instruments Inc. shall do outgoing inspection before shipping. The inspection items are as below table. The inspection results shall be submitted by the customer request.

No	Characteristics	Inspection levels	Frequency
1	Open circuit voltage	n=6, c=0	per lot
2	Internal Impedance	n=6, c=0	per lot
3	Discharge capacity	n=6, c=0	per month
4	Leakage resistance	n=10, c=0	per lot

10-3. Incoming Inspection

The customer should do incoming inspection within 30 days from receiving day.

If defective products are find out at incoming inspection, the customer immediately should notify to Seiko Instruments Inc. in writing with the defective products for replacement request. When there was no contact from you within 30 days, we shall judge that those were accepted.

11. Package Specifications

Examples of the tray or the Emboss tape for wrapping, wrapping specification, and packing specification are shown in the following as our standard.

11-1. Wrapping

Refer to “Drawing of Emboss Carrier Tape”, “Battery position in emboss tape” and “Taping specifications”.

11-2. Wrapping and packing

Refer to “Package specifications (Overseas)” attached.

12. In case of quality trouble

The warranties set forth herein are the only warranties on the products.

The liabilities of Seiko Instruments Inc. in connection with the products under these specifications are expressly limited to the replacement of defective products.

13. Operation of this Specification

13-1. Agreement

Before these specifications being revised, the agreement, of the customer, seller and manufacturer, is required.

13-2. Negotiation

If some accident not specified on these specifications occurs, the customer, seller and manufacturer must negotiate in order to solve the problem faithfully.

Leakage Criteria

Grade	Criteria	
	Diagram	Definition
S1	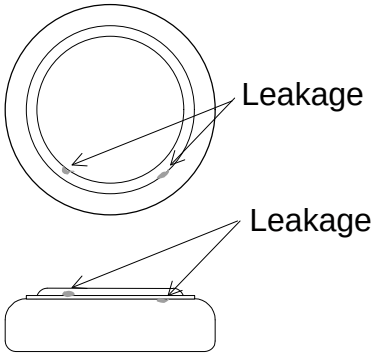	The leakage can not be seen by naked eyes, but can be seen by microscope, which have magnification of 10 to 15.
S2	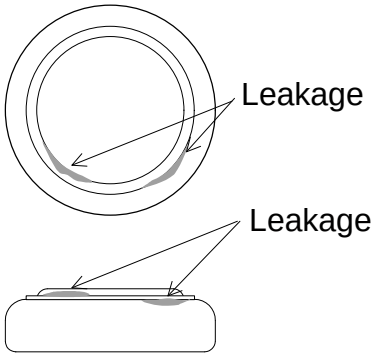	The leakage can be seen by naked eyes. The area of leakage is within half of the round and reaching to neither the flat area of the negative can nor the straight area of the positive can. The leakage is not bridged between the negative can and the positive can.
S3	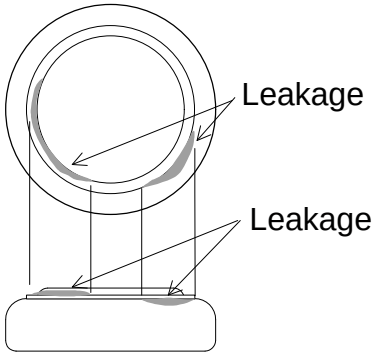	The area of leakage is from half to all of the round and reaching to neither the flat area of the negative can nor the straight area of the positive can. The leakage is not bridged between the negative can and the positive can.
C1	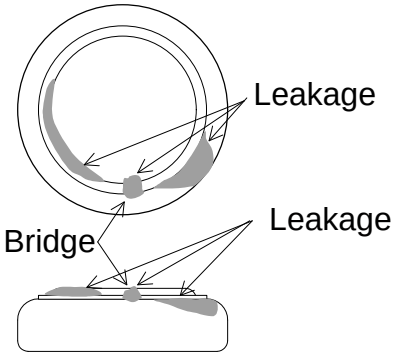	The area of leakage is reaching to either the flat area of the negative can or the straight area of the positive can. The leakage is bridged between the negative can and the positive can.

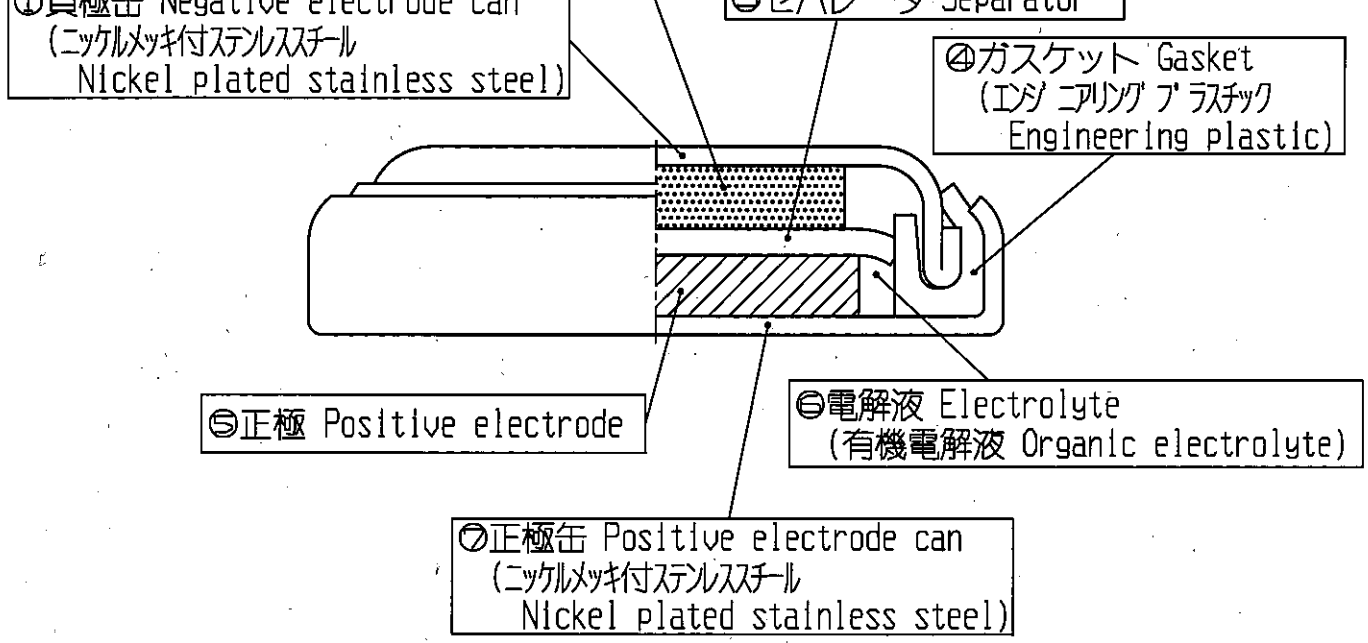

						File No. ファイル番号	30460000-ML000-1
						Material 材料	
						Process 処理	
						Date 日付	31. May. '07
E07A-027	31. May. '07	設定				Name 名称	Construction of battery 電池構成図
History履歴	Date 日付	Reason 理由					
Approved 承認	Checked 検査	Drawn 製図	Scale 尺度			Cal. No. 製品番号	ML***
渡邊	金谷	内藤	Unit 単位	1=1mm		Drw. No. 図面番号	3046 ML000
			Rev. 改訂	1			

Seiko Instruments Inc.

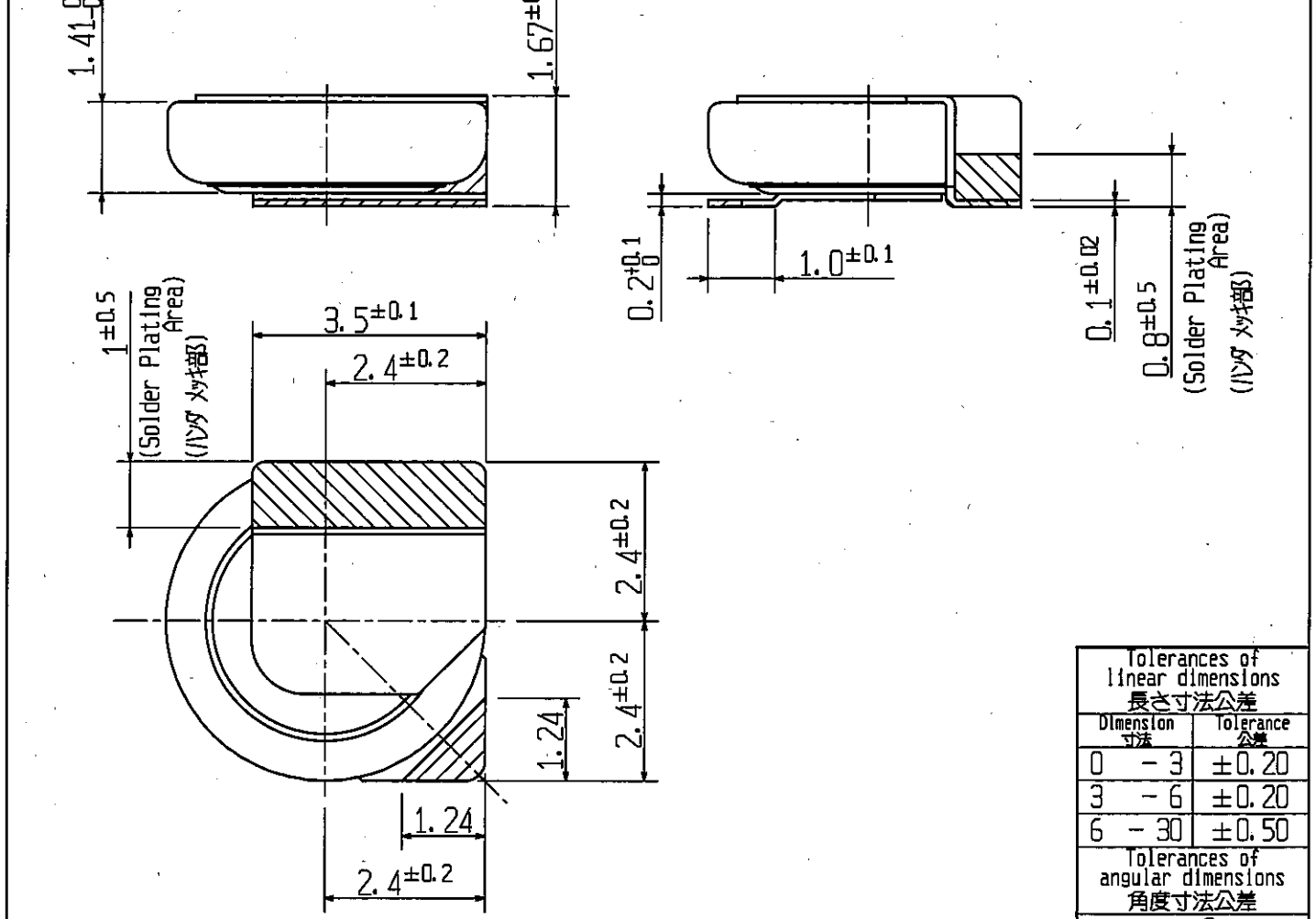

Tolerances of linear dimensions 長さ寸法公差	
Dimension 寸法	Tolerance 公差
0 - 3	±0.20
3 - 6	±0.20
6 - 30	±0.50
Tolerances of angular dimensions 角度寸法公差	
±2°	

						File No. ファイル番号	30461090-IV01E-1
						Material 材料	TAB:SUS304-Ni·P H/2
						Process 処理	:Solder plating ハンダ メッキ 2～4μm (Sn 100%)
						Date 日付	10. May. '07
E07A-024	10. May. '07	設定				Name 名称	Battery drawing with tabs 端子付電池図面
History履歴	Date 日付	Reason 理由					
Approved 承認	Checked 検査	Drawn 製図	Scale 尺度	10:1		Cal. No. 製品番号	ML414H IV01E
渡邊	金谷	内藤	Unit 単位	1=1mm			
			Rev. 改訂	1		Drw. No. 図面番号	109 IV01E

Seiko Instruments Inc.

Gap : +0.36mm
ギャップ : +0.36mm

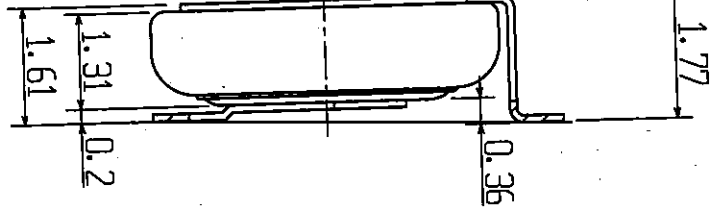

Gap : +0.06mm
ギャップ : +0.06mm

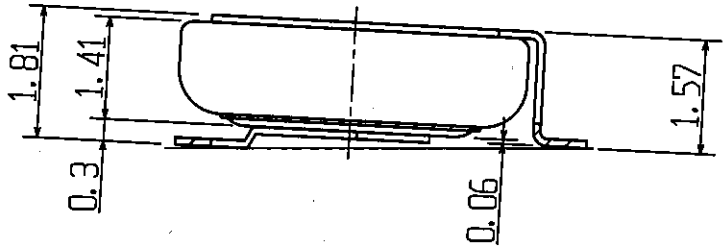

						File No. ファイル番号	30461090-IV01EC1
						Material 材料	
						Process 処理	
						Date 日付	10. May. '07
E07A-024	10. May. '07	設定				Name 名称	Explanation of coplanarity 平坦度説明図
History履歴	Date 日付	Reason 理由					
Approved 承認	Checked 検査	Drawn 製図	Scale 尺度			Cal. No. 製品番号	ML414H IV01E
渡邊	金谷	内藤	Unit 単位	1=1mm			
			Rev. 改訂	1		Drw. No. 図面番号	109 IV01E C

Seiko Instruments Inc.

Reflow Profile

< Reflow Soldering Conditions >

Reflow Soldering Profile: As per shown in Fig.-1.

The times of repeated reflow soldering must be **two times or less**.

The temperature must be measured at top of the cell.

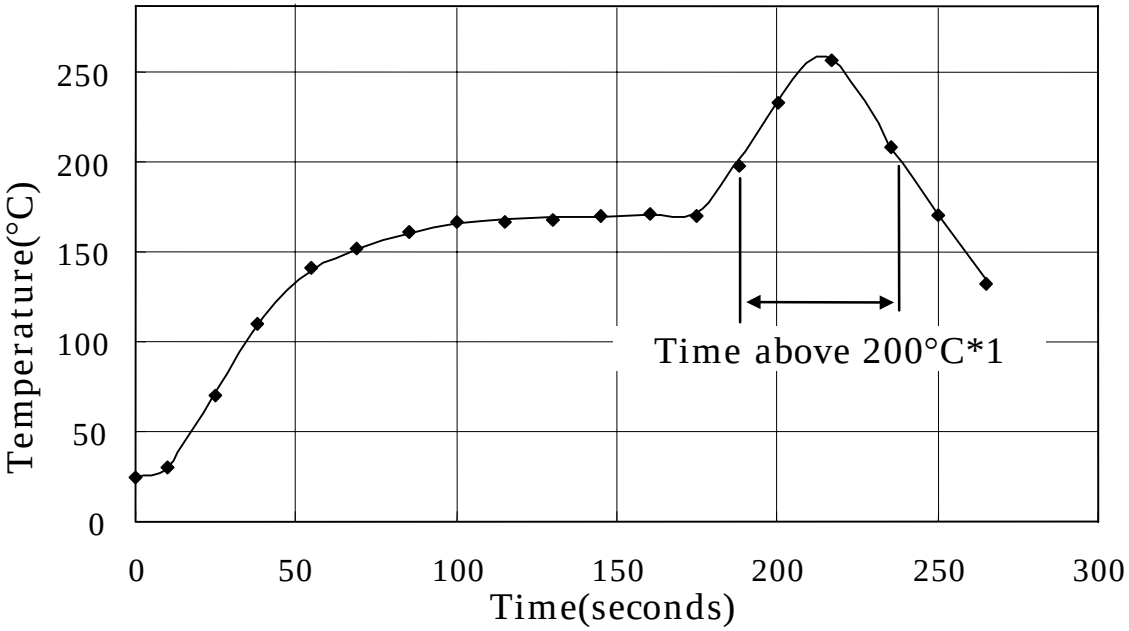

Fig.-1: Reflow soldering profile (for reference only)

*1: Time above 200°C must be max. 80seconds.

Total length of profile must be max. 300seconds.

	Model
Peak Temperature	ML414H
Max.260°C	Applicable (within 5 seconds)

< Underfilling Conditions >

Temperature: Max.160°C, Time: Max.10 minutes.

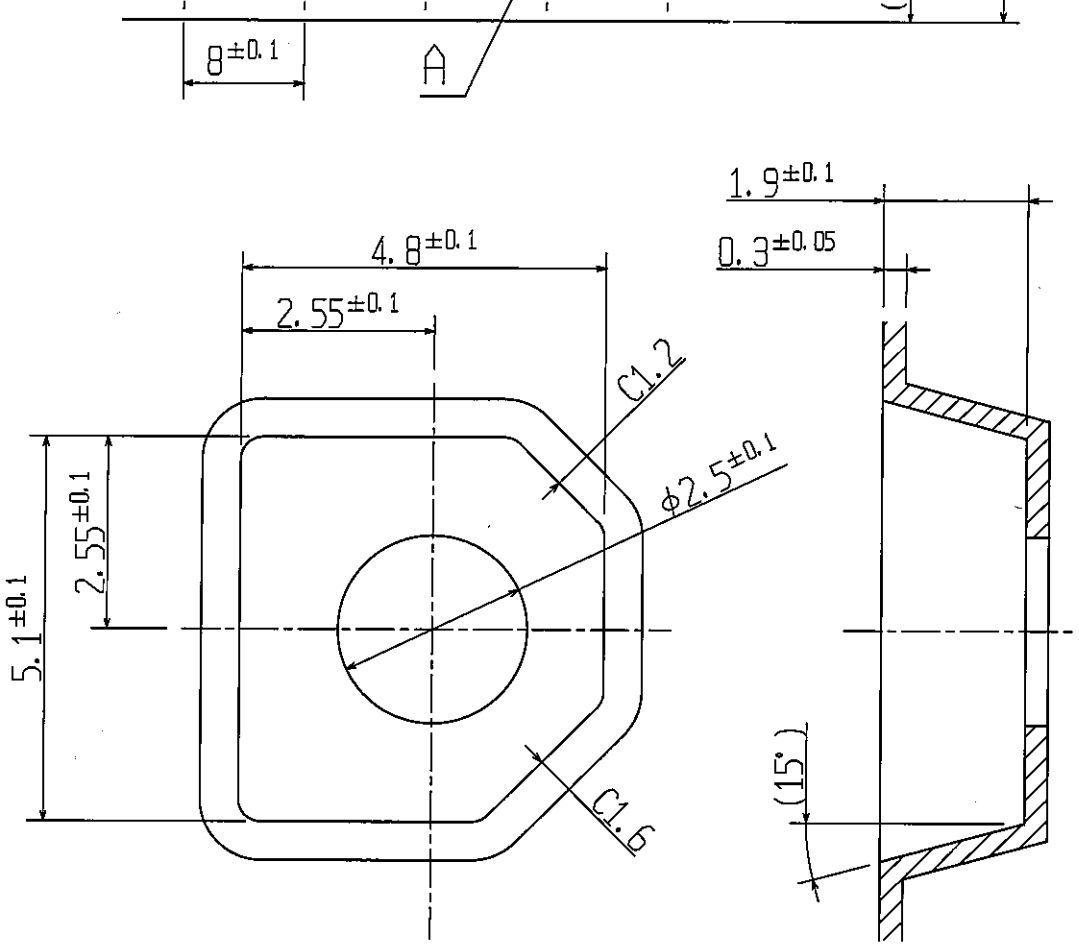

Detail A (10:1)
詳細 A (10:1)

Tolerances of linear dimensions 長さ寸法公差	
Dimension 寸法	Tolerance 公差
0 – 3	±0.20
3 – 6	±0.20
6 – 30	±0.50
Tolerances of angular dimensions 角度寸法公差	
±2°	

				File No. ファイル番号	3177N310-00000-1
				Material 材料	Polystyren(Natural) ポリスチレン(ナチュラル)
				Process 処理	16,700 P/R
				Date 日付	Apr. 01, 2007
E08A-010	Apr. 02, 2007	設定		Name 名称	Drawing of emboss carrier tape エンボスキャリアテープ図面
History履歴	Date 日付	Reason 理由			
Approved 承認	Checked 検査	Drawn 製図	Scale 尺度 2:1	Cal. No. 製品番号	**414
冨塚		尾形	Unit 単位 1=1mm		
			Rev. 改訂 1	Drw. No. 図面番号	3177 N31

Seiko Instruments Inc. Micro-Energy Division

Battery position in emboss tape

1. Model
ML414H　IV01E
2. Capacitor position in emboss tape
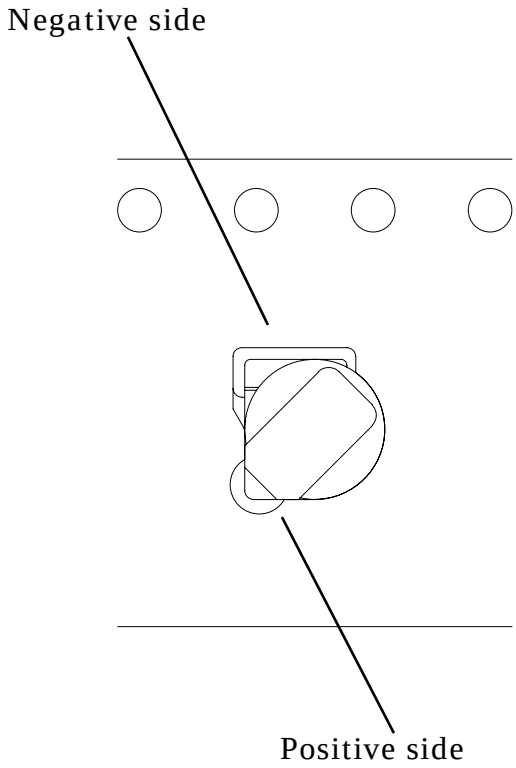
3. Quantity / reel
MAX. 4000 pcs / reel

Seiko Instruments Inc.

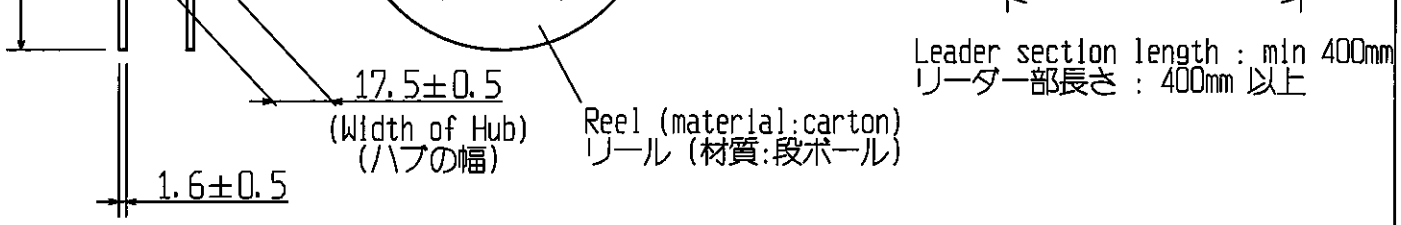

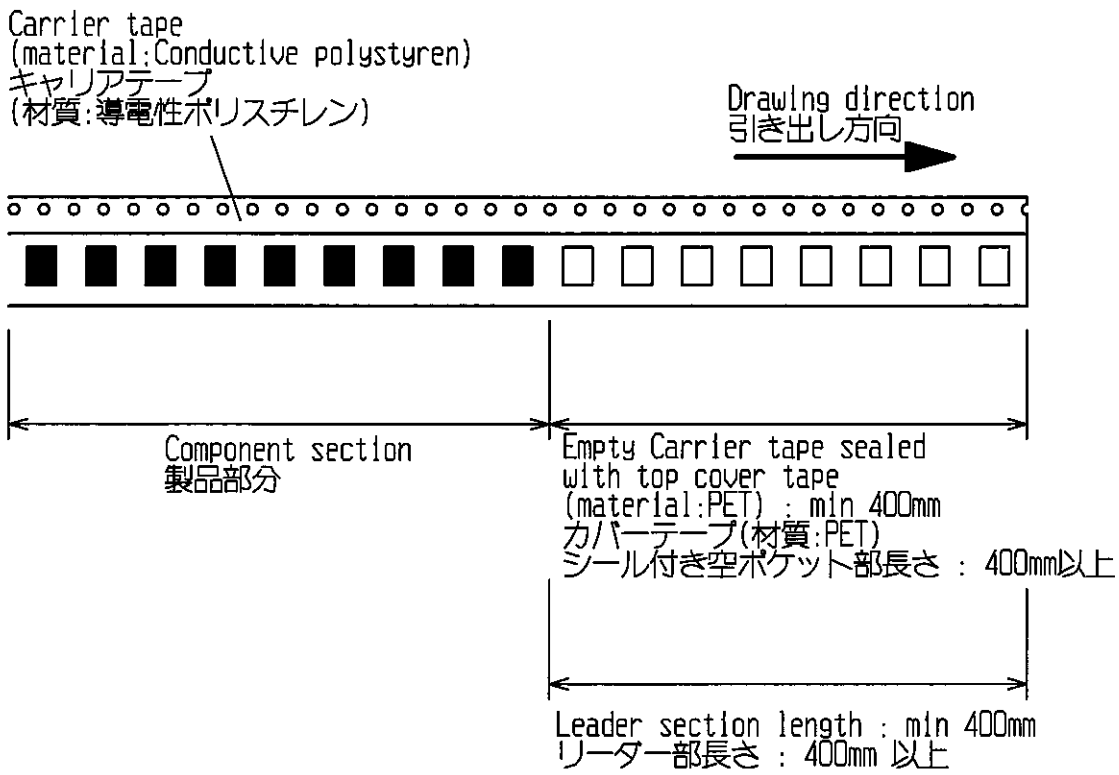

						File No. ファイル番号	3177OE16-00000-2
E04B-019	07. Jun.'04	リールの寸法、公差設定				Date 日付	09. May.'03
E03A-020	19. Jul.'01	設定				Name 名称	Taping specifications テーピング仕様
History履歴	Date 日付	Reason 理由					
Approved 承認	Checked 検査	Drawn 製図	Scale 尺度			Cal. No. 製品番号	———
山田	冨塚	尾形	Unit 単位	1=1mm		Drw. No. 図面番号	3177 OE16
			Rev. 改訂	2			

Seiko Instruments Inc.

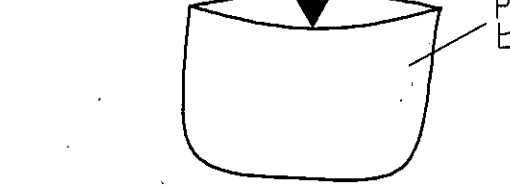

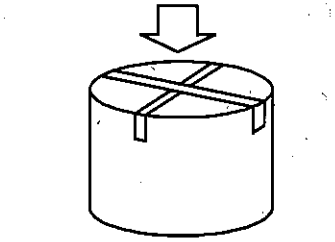

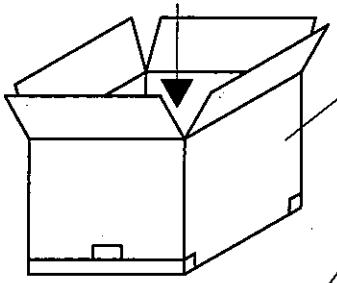

Outer packing
外箱梱包

カートンラベル:製品名, 納入数量, 納入月日, 注番
＊注意表示(リチウム二次電池在中)等
Carton label:Model, quantity, dellvery date,
purchase order number.
＊CAUTION(Lithium rechargeable
Batteries inside)etc.

＊空・海上輸送時のみ
＊At the airlift and the ship transportation

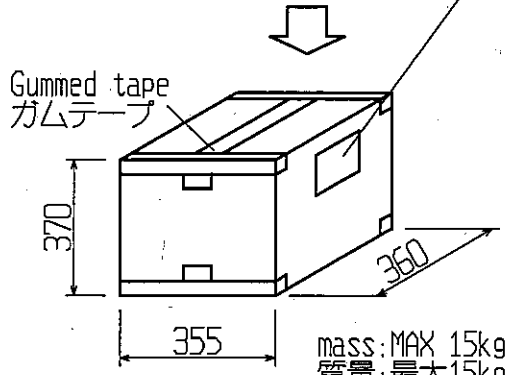

mass:MAX 15kg
質量:最大15kg

Package appearance
梱包外観

The above packaging specifications are standard.
These specifications vary with the quantity to be supplied.
上記、梱包形態は標準的なもので、納入時の数量により異なります。

				File No. ファイル番号	3177D0A7-00000-2
E03B-025	8. Aug. '03	注意表示の内容変更		Date 日付	24. Apr. '03
E03A-019	24. Apr. '03	設定		Name 名称	Package specifications(Domestic) 梱包仕様(国内向け)
History履歴	Date 日付	Reason 理由			
Approved 承認	Checked 検査	Drawn 製図	Scale 尺度	Cal. No. 製品番号	A7
山田	富塚	尾形	Unit 単位 1=1mm		
			Rev. 改訂 2	Drw. No. 図面番号	3177 D0A7

Seiko Instruments Inc.

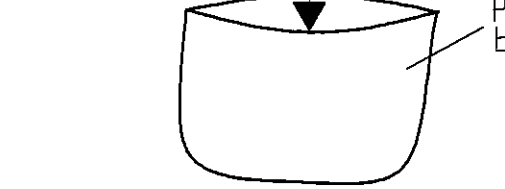

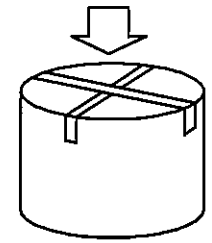

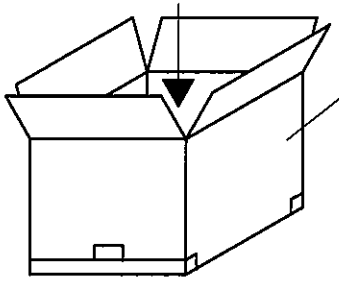

Outer packing
外箱梱包

カートンラベル:行き先,原産国,カートンNo.
！注意表示(リチウム二次電池在中)等
Carton label:Destination,country of origin,
carton number.
！CAUTION(Lithium rechargeable
Batteries inside)etc.

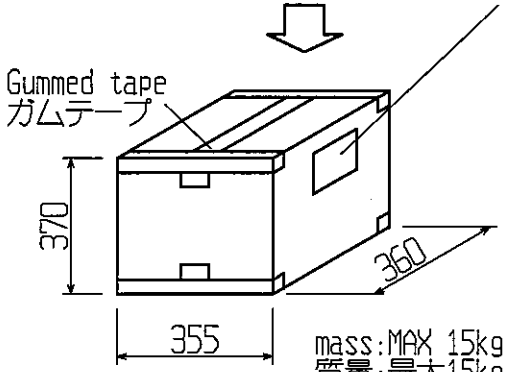

mass:MAX 15kg
質量:最大15kg

Package appearance
梱包外観

The above packaging specifications are standard.
These specifications vary with the quantity to be supplied.
上記、梱包形態は標準的なもので、納入時の数量により異なります。

E03B-025	08. Aug. '03	注意表示の内容変更				File No. ファイル番号	3177S0A7-00000-3
E03B-015	07. May. '03	名称誤記訂正(国内→海外)				Date 日付	24. Apr. '03
E03A-019	24. Apr. '03	設定				Name 名称	Package specifications(Overseas) 梱包仕様(海外向け)
History履歴	Date 日付	Reason 理由					
Approved 承認	Checked 検査	Drawn 製図	Scale 尺度			Cal. No. 製品番号	A7
山田	冨塚	尾形	Unit 単位	1=1mm			
			Rev. 改訂	3		Drw. No. 図面番号	3177 S0A7

Seiko Instruments Inc.

Precautions for Your Safety

SII Lithium rechargeable batteries (ML, MS, HB, TS) contain flammable organic solvents. For your safety, please follow following prohibitions.

⚠ WARNING!

1. Do not charge by high current or high voltage.
   Doing so may generate gas inside the battery, resulting swelling, catching fire, and heat generation or bursting.
2. Do not heat, disassemble nor dispose of in fire
   Doing so damages the insulation materials and may cause catching fire, heat generation, leakage or bursting.
3. Do not solder directly to the battery
   If soldering is performed directly to the battery, the battery is heated up, consequently cause leakage, explosion or fire due to overheating from internal short-circuiting.
4. Do not short.
   If the (+) and (-) come into contact with metal materials, short-circuiting occurs. As a result, catching fire, heat generation, leakage or bursting.
5. Keep batteries out of children's reach.
   If leaked liquid is ingested or a battery is swallowed, consult a physician immediately.
6. Do not reverse placement of (+) and (-)
   If the (+) and (-) side of the battery is reverse inserted, it may cause a short-circuiting or over discharge of the battery on some equipment and it may induce overheating, explosion or fire.
7. Do not discharge by force
   If the battery is discharged by direct connection to an external power supply etc., voltage of the battery will decline lower than 0 volts (electrical reversal) and will cause the battery case to expand, overheat, leak, explode or burn.
8. Incase of leakage or a strange-smell; keep away from fire to prevent ignition of any leaked electrolyte.
9. In case of disposal, insulate between (+) and (-) of battery by an insulating
   Jumbling batteries or with other metal materials cause short-circuiting. As a result, catching fire, heat generation, leakage or bursting.

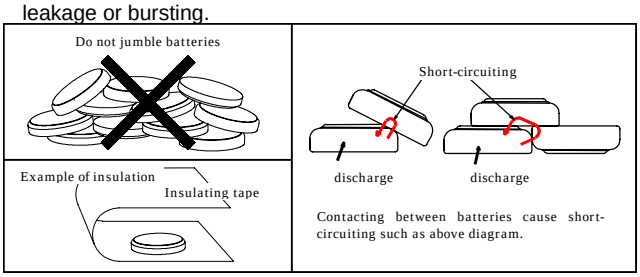

⚠ CAUTION!

1. If leaked liquids gets in the eyes, wash them with clean water and consult a physician immediately.
2. Do not use new and used batteries together. Do not use different types of batteries together.
   It may cause catching fire, heat generation, leakage or bursting.
3. If you connect two or more batteries in series or parallel, please consult us in advance.
   It may cause bursting or catching fire due to unbalanced load or voltage.
4. Do not use nor leave the batteries in direct sunlight nor in high-temperature areas.
   It may cause catching fire, heat generation, leakage or bursting.
5. Do not apply strong pressure to the batteries nor handle roughly.
   It may cause catching fire, heat generation, leakage or bursting.
6. Avoid contact with water.
   It may cause heat generation.
7. Keep batteries away from direct sunlight, high temperature and humidity.
   It may cause heat generation.

For prevention the performance of battery

1. Pay attention to mat or sheet for ESD
   Battery with tabs or battery on PCB may short circuit on the mat for ESD. As a result the voltage of cell drops down.
2. Pay attention to soldering by tips
   Do no touch the battery by solder chips, in case of soldering another components after equipping battery.
   In basically, keep any high temperature process away from battery.
3. Pay attention to material of jig for pick and place
   Use nonconductive material of jig for pick and place of batteries, for short-circuit protect. If short circuit of battery is occurred, the voltage of battery drops down quickly but raise gradually.
4. Pay attention to washing and drying
   Some detergent or high temperature drying cause deteriorates of battery. If wash batteries, consult us.

International Transportation and Disposal

International Air / Marine / Ground Transportation

Regarding the transport of Lithium battery and Lithium-ion battery, organizations like IATA, ICAO, IMO, DOT have determined transport regulations, based on the United Nations Regulations.
The SII Lithium rechargeable batteries can be transported being not subject to the provisions of dangerous goods, if they meet the following requirements.
(a) **<Lithium content>**The Lithium content is not more than 1g.
(b) **<Safety Certification>**Each battery is of a type proved to meet the requirements of each test in the UN Manual of Tests and Criteria, Part 3, sub-section38.3.
(c) **<Strong packaging>**Batteries are separated so as to prevent short circuits and are packed in strong packaging.
(d) **<Caution Label>**Each package must be marked indicating that it contains lithium batteries and that special procedures should be followed in the event that the package is damaged.
(e) **<Not Restricted Declaration>**Each shipment must be accompanied with a document indicating that the packages contain lithium batteries and that special procedures should be followed in the event that a package is damaged.
(f) **<Package Drop Test>**Each packages is capable of withstanding a 1.2 m drop test in any orientation without damage to batteries contained.
(g) **<Weight Limit>**Except in the case of packed with equipment, packages may not exceed 30 kg gross mass.
(h) **<Transport to U.S.A>**When you transport to U.S.A., emergency contact information must be indicated on the required documents.
For further information, please consult with us.

Disposal

Recent environmental protection concerns have increased globally and waste and recycling are regulated in the world. The current regulations differ in each country, state and local municipality. Please consult local regulations and authorities for recommended disposal of batteries. If you are in question of application or safety of our batteries, please consult your local authorities.