SII

SEIKO
SEIKO HOLDINGS GROUP

Micro Battery

Product Catalogue

2016



Seiko Instruments Inc.

NEW

Chip-Type Electric Double Layer Capacitor/Low ESR, Low Leak Current, Reflowable

CPX10080 series (Under development)



New Reflowable Chip-Type Capacitor "CPX10080 Series"

Features

- ◆ Reflowable
- ◆ Large discharge current achieved by low internal impedance
- ◆ Rapid charging (CPX10080C402F)
- ◆ Small leak current (10n A level of leak current (CPX10080C104F))
- ◆ Long life span, high reliability

Usages

- Power backup of instantaneous battery detachment
- Power source for wireless sensor network & RFID tag.
- Electric storage device for energy harvesting
- Peak load leveling of primary battery

Specifications

Par number	Maximum Use Voltage	Capacitance	Internal Impedance (ESR)	Size (LxWxH)	Operating Temperature Range (°C)	Weight
CPX10080C104F	2.5V	100mF	0.5Ω	10.0×8.0×1.9mm	–40°C to 70°C	0.45g
CPZ10080C104F	3.3V	100mF	1.5Ω	10.0×8.0×1.9mm	–30°C to 60°C	0.45g
CPX10080C402F	2.5V	4mF	0.5Ω	10.0×8.0×1.9mm	–40°C to 70°C	0.45g



A few decades ago, we commercialized a highly reliable silver oxide battery to meet the requirement of quartz watch development. Since then, we have expanded our microbattery offering and technology to support the increased diversity in electronic products available today.
This brochure introduces manganese silicon lithium rechargeable batteries, titanium silicon lithium rechargeable batteries, and reflowable capacitors.
We plan to continuously develop higher performance microbatteries and widen our products lineup to keep up with our emerging technologies.
Please feel free to contact us with any questions you may have.

FEATURES

1. Superior leakage resistance
Even a slight leakage from a battery may interfere with the connections made by the battery terminals, resulting in unstable device operation. Seiko Instruments Inc. offers micro batteries that are highly leak-resistant due to special sealing materials and processing technologies.

2. Large capacity
In order to extend the operating time of devices with limited battery space, the market demands high volumetric efficiency.
We offer large-capacity microbatteries developed with proprietary technology utilizing high-purity materials.

3. Stable operating voltage
Carefully compounded ingredients allow each of our micro batteries to have a stable operating voltage over both a wide temperature range and depth of discharge.

4. High reliability
Our micro batteries are manufactured under an integrated system featuring strict quality control, which starts with component manufacturing, through assembly and on to rigorous out-going inspection.

CONTENTS

CPX10080C / CPZ10080C 2
Microbattery and Capacitor Lineup 4
MS Lithium Rechargeable Battery..... 6
MS Lithium Rechargeable Battery
<Wider Temperature Range> 10
TS Lithium Rechargeable Battery
<For Solar Watches> 12
CPH Capacitor 14
XH Capacitor 16
Charging Circuit..... 19
CPX Capacitor
<Low ESR, Low Leak Current, Reflowable> 20
Silver Oxide Battery 22
Selection Check Sheet 24
Environmental Activities 25
Precautions for Your Safety 26

Microbattery and Capacitor Lineup

MICROBATTERY AND CAPACITOR FEATURES

Chip type electric double layer capacitor : Small and thin size chip type Electric Double Layer Capacitor.

XH capacitor : Pb-free reflowable capacitor made possible by a heat-resistant design. High capacity and long cycle characteristics are offered.

MS lithium rechargeable battery : 3V type. Large capacity and high cycle life characteristics in a compact body with excellent overdischarge characteristics featured.

TS lithium rechargeable battery : 1.5V type. Charge voltage range from 1.5V to 3.0V is supported while high reliability is achieved.

Rechargeable battery and capacitor sizes

*The rectangle and circles in the table show actual battery and capacitor sizes.

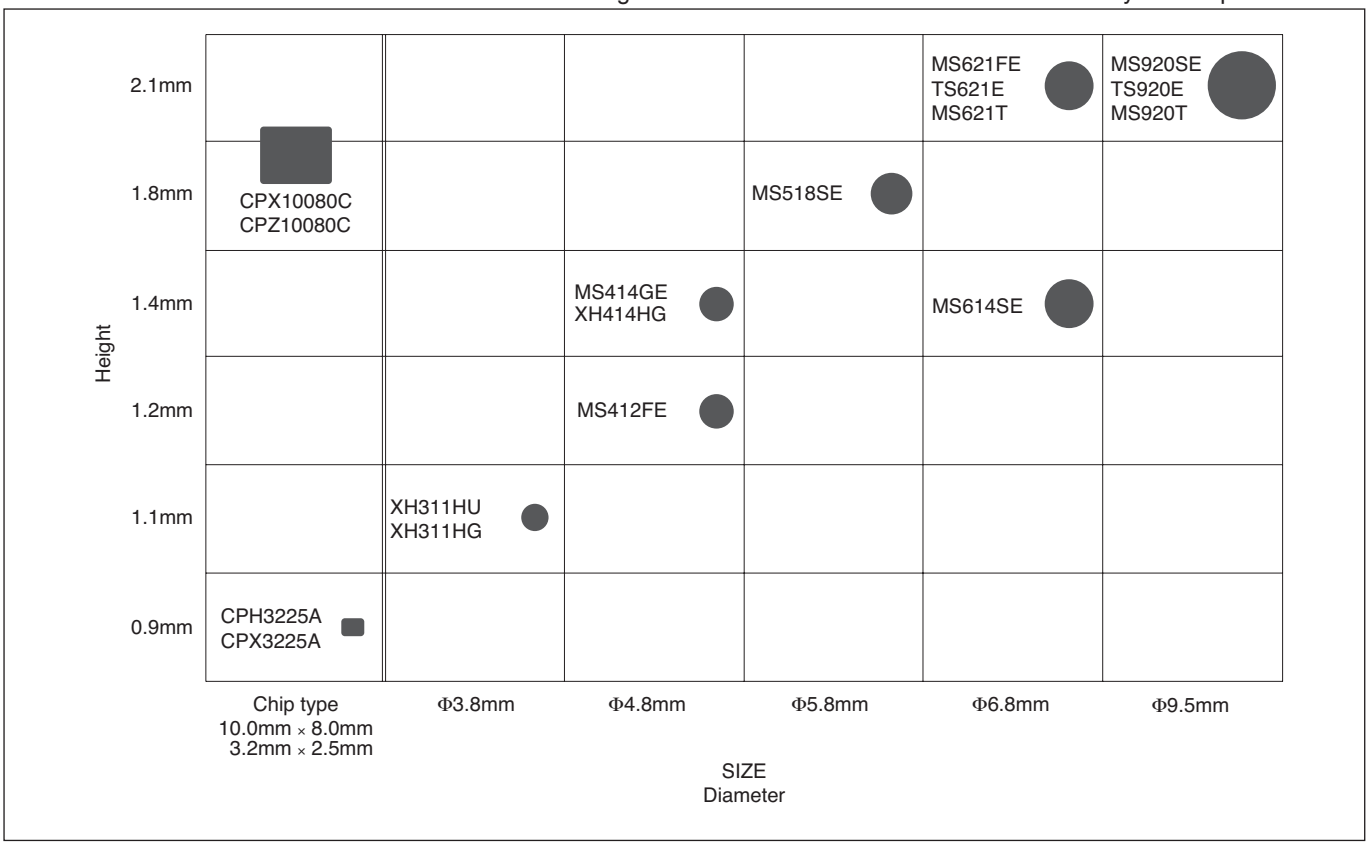

Applications


Smartphone


Digital still camera


Tablet


Video camera


GPS·Car navigation system


Watch

Example of a recommended application circuit: for RTC backup

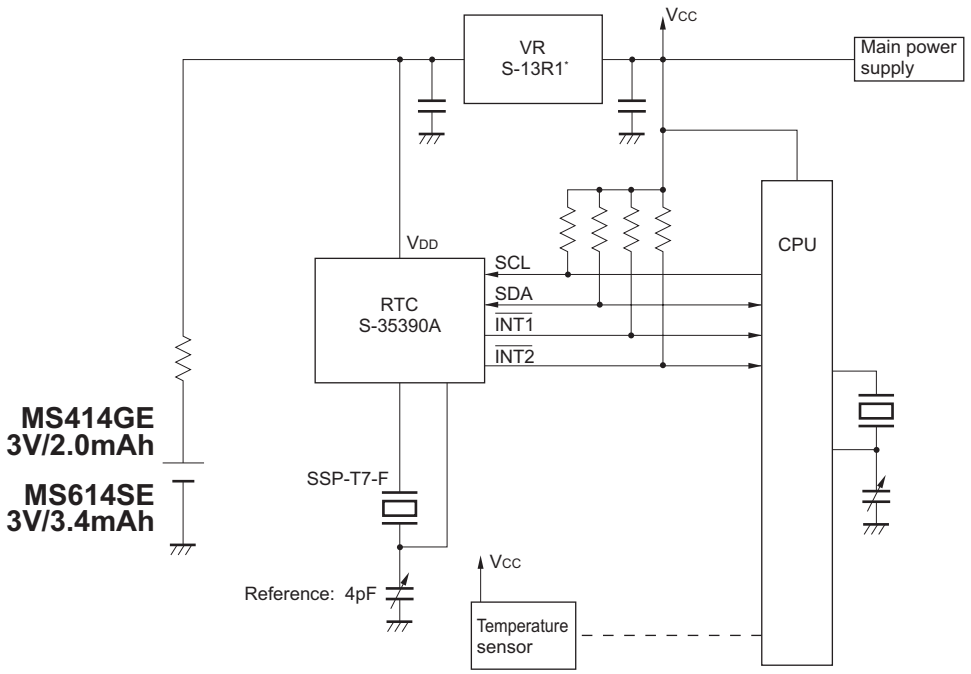

* Reverse Current Protection CMOS Voltage Regulator S-13R1, made by SII Semiconductor Corporation.
* This circuit diagram is a reference example. See the data sheet of each product before using it.

Example of RTC backup time, using MS414GE/MS614SE

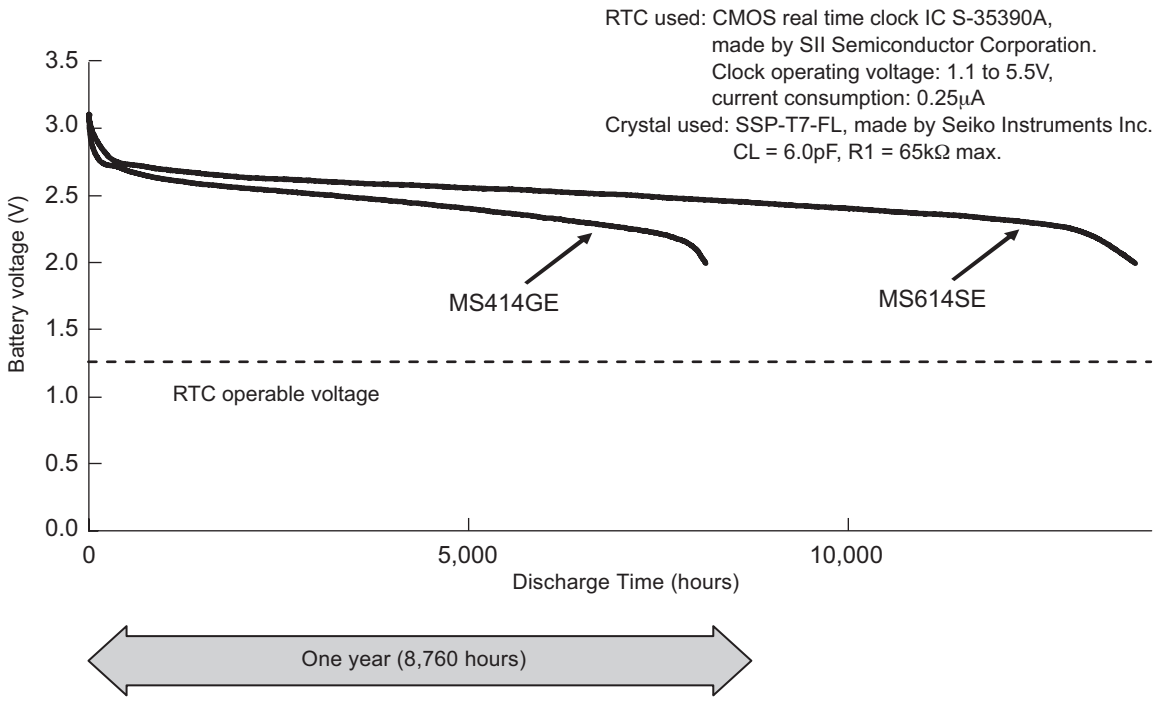

* This graph is a rough indication. The operating time varies depending on the actual service conditions.

MS414GE / MS412FE / MS518SE / MS614SE / MS621FE / MS920SE

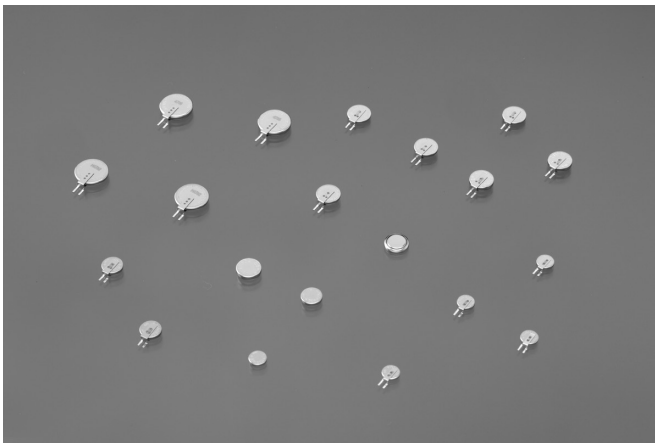

MS (Manganese Silicon) lithium rechargeable batteries, developed by Seiko Instruments Inc., use silicon oxide as the anode and a lithium manganese composite oxide as the cathode. As a result, they offer long cycle life and highly stable overdischarge characteristics.

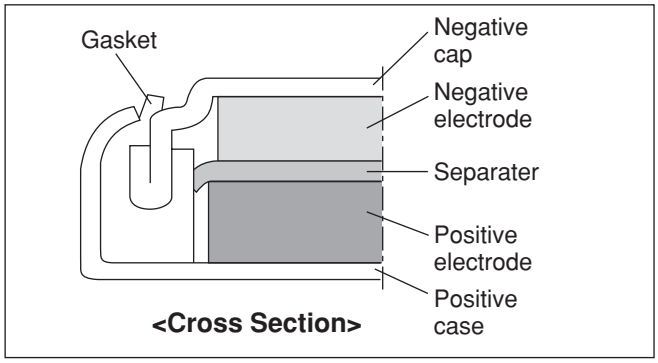

FEATURES

- Large discharge capacity :
  For high operational voltage range of 3.3V to 2.0V.
- Long cycle life :
  Cycle life of over 100 cycles (over 50 cycles for MS414GE) under charge/discharge conditions of 3.1V to 2.0V (D.O.D.100%).
- Excellent overdischarge characteristics :
  Continued stable capacity characteristics even after the battery is overdischarged down to 0.0V.
- Operation over a wide temperature range:
  Operating temperature range : –20°C to +60°C
  Consult us for using the battery at a temperature beyond the above temperature range.
- RoHS Compliant
- Approved by UL (Underwriters Laboratories Inc.)
  UL File No. MH15628

APPLICATIONS

- Backup power supply for memory or clock function in various types of electronic equipment for mobile communication, office automation, audio-visual equipment, mobile information equipment, etc. (smartphone, tablet, cellphone, PHS, cordless phone, fax machine, PC, video camera, digital camera, tuner, handy terminal, etc.)
- Main power supply for small and slim portable equipment.

SPECIFICATIONS

Type	Nominal Voltage (V)	Charge Voltage (Standard Charge Voltage)*6 (V)	Nominal Capacity (mAh)*1	Internal Impedance (Ω)*2	Standard Charge/ Discharge Current (mA)	Maximum Discharge Current (Continuous) (mA)*3	Cycle Life (Time)*4		Size (mm)		Weight (g)
							100%*5 D.O.D. (Depth of Discharge)	20%*5 D.O.D. (Depth of Discharge)	Diameter	Height	
MS414GE	3	2.8 to 3.3 (3.1)	2.0	100	0.010	0.05	50	500	4.8	1.4	0.08
MS412FE	3	2.8 to 3.3 (3.1)	1.0	100	0.010	0.10	100	1000	4.8	1.2	0.07
MS518SE	3	2.8 to 3.3 (3.1)	3.4	60	0.010	0.15	100	1000	5.8	1.8	0.13
MS614SE	3	2.8 to 3.3 (3.1)	3.4	80	0.015	0.25	100	1000	6.8	1.4	0.17
MS621FE	3	2.8 to 3.3 (3.1)	5.5	80	0.015	0.25	100	1000	6.8	2.1	0.23
MS920SE	3	2.8 to 3.3 (3.1)	11.0	35	0.050	0.80	100	1000	9.5	2.1	0.47

*1. Nominal capacity: Typical value of discharge capacity between 3.1V and 2.0V
*2. Internal impedance is measured using an AC (Alternating Current) method at the fully charged state.
*3. Maximum discharge current indicates the value of a current for approximately 50% of the nominal capacity.
*4. Cycle Life indicates the times charge/discharge is repeated for approximately 50% of the capacity values in the specification sheet.
*5. 100% and 20% are based on nominal capacity.
*6. A constant voltage charge is recommended, but due to a limit in charge current, it is necessary to insert a resistor to regulate the charge current.
Please see Page 19 for resister value. Contact us for further details.
If a constant current charge is required, contact us for more information.

MS Lithium Rechargeable Batteries are not reflowable. Please mount them on PCB by hand soldering.

DISCHARGE CHARACTERISTICS (CHARGE VOLTAGE DEPENDENCE)

MS414GE

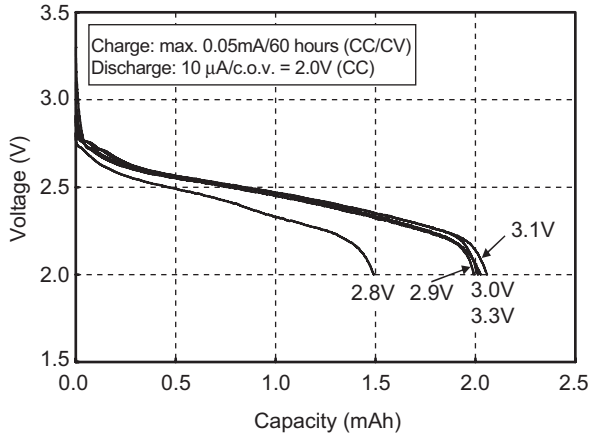

MS412FE

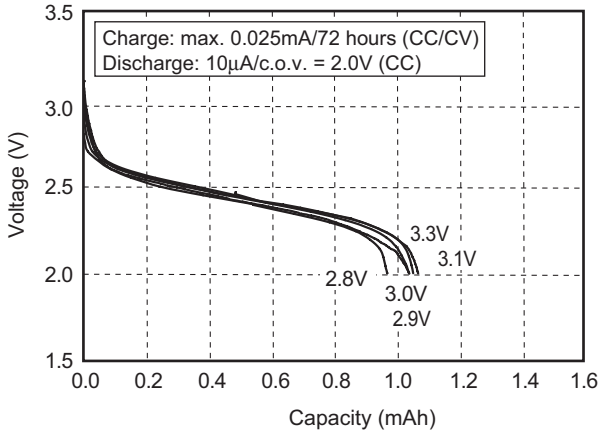

MS518SE

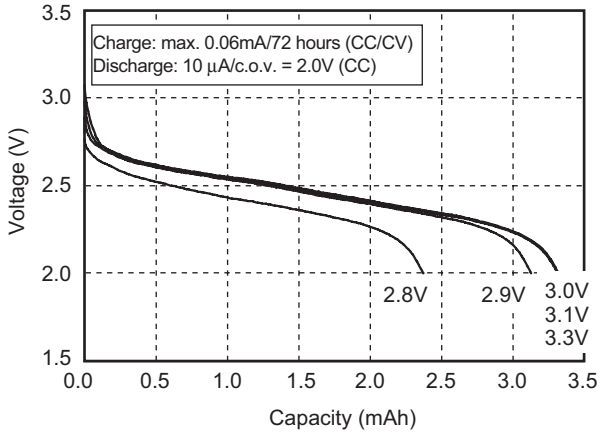

MS614SE

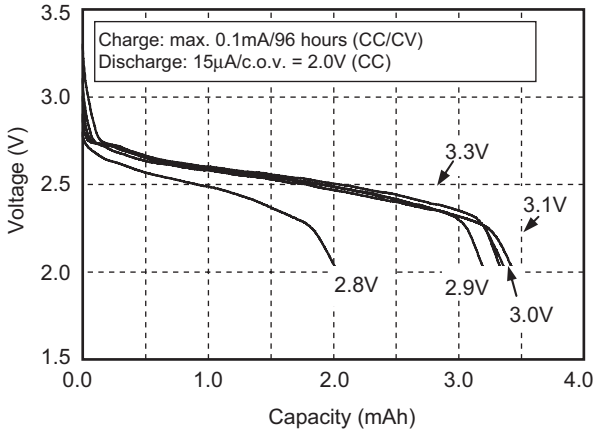

MS621FE

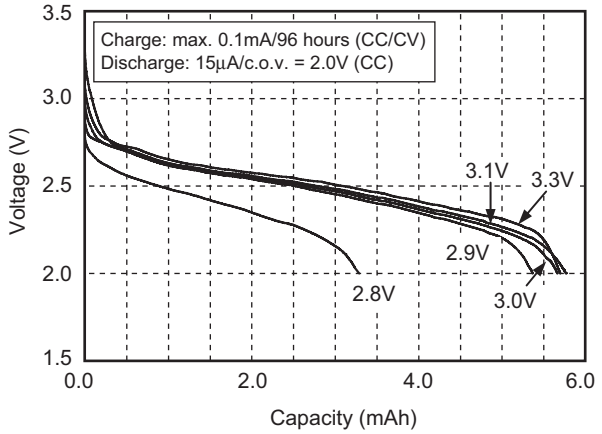

MS920SE

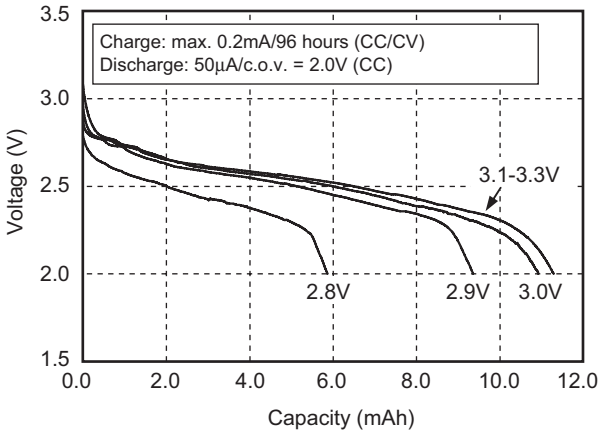

* c.o.v. : Cut off Voltage

CHARACTERISTICS

MS614SE

Charge/discharge characteristics

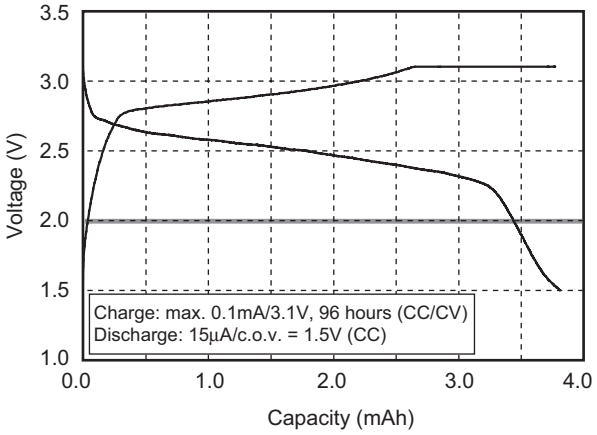

Discharge Characteristics at Various Discharge Current

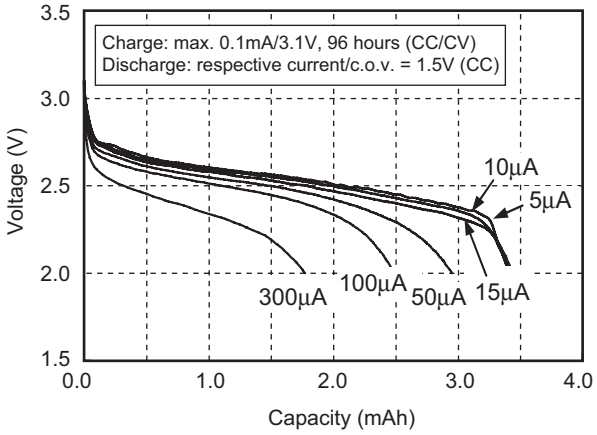

Overdischarge Characteristics

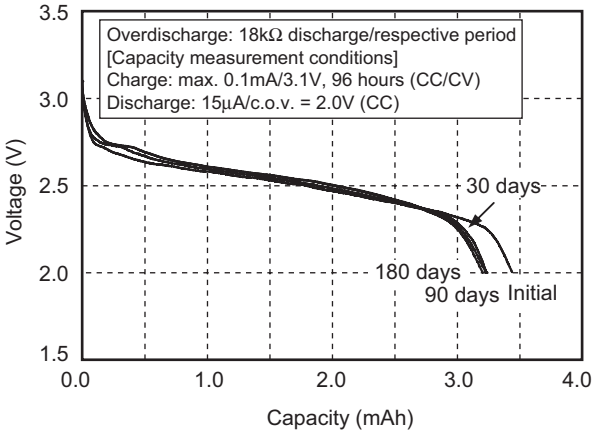

Discharge Temperature Characteristics

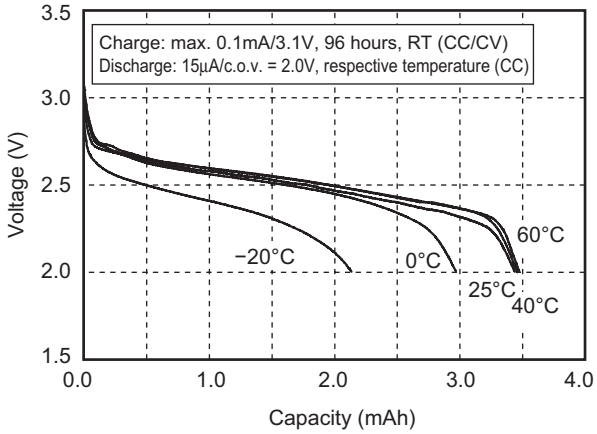

High Temperature (60°C) Storage Characteristics

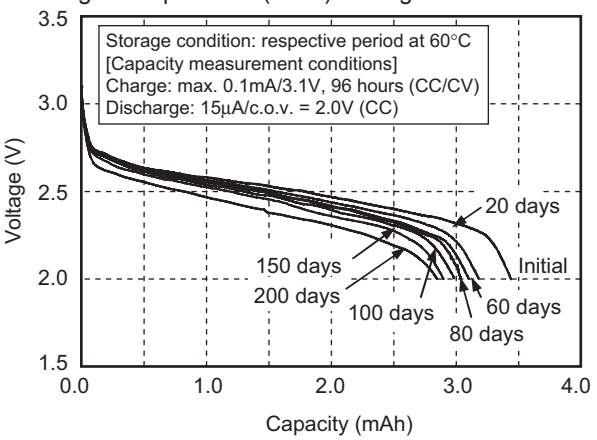

Floating Characteristics (60°C, applied voltage 3.1V)

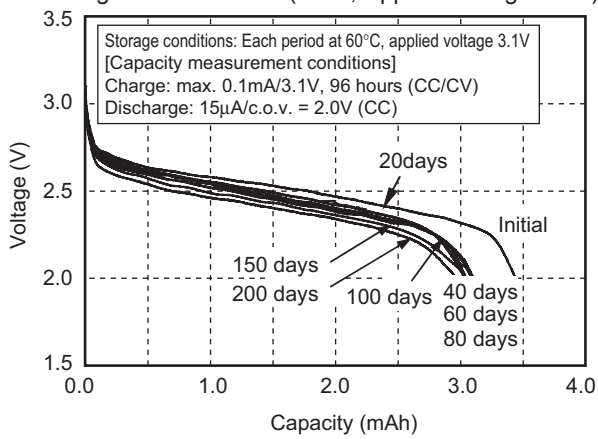

DIMENSIONS OF STANDARD TERMINALS OF MS LITHIUM RECHARGEABLE BATTERIES

MS414GE FL26E

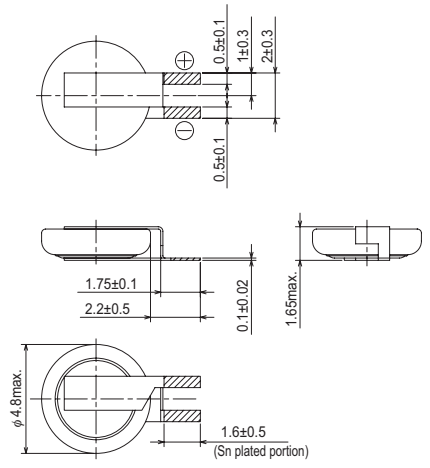

MS412FE FL26E

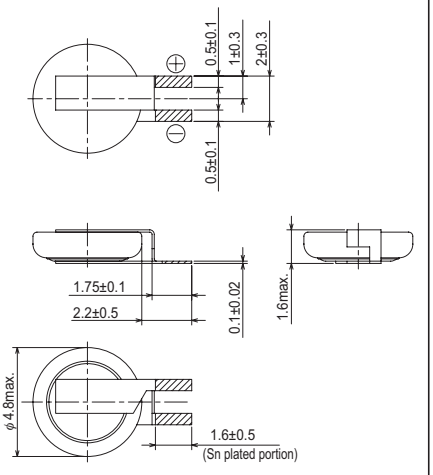

MS518SE FL35E

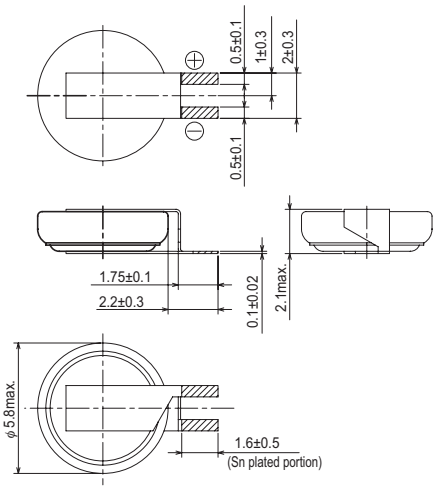

MS614SE FL28E

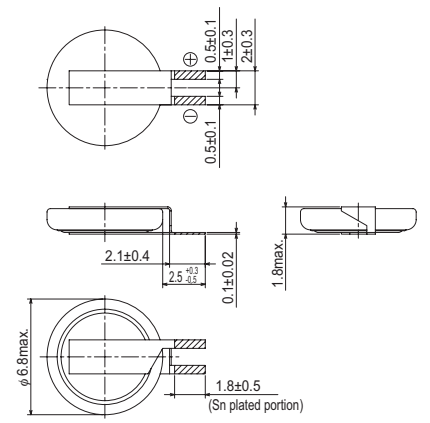

MS621FE / MS621T FL11E

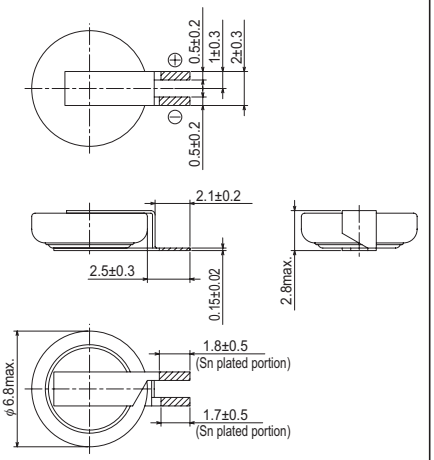

MS920SE / MS920T FL27E

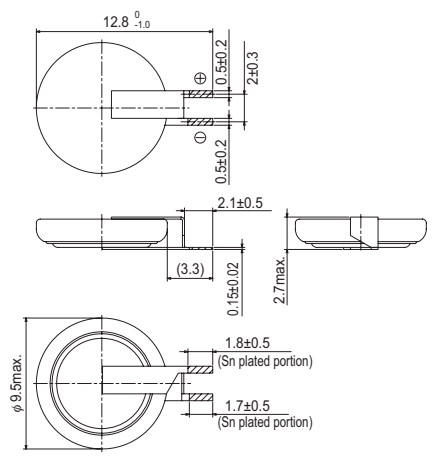

MS614SE

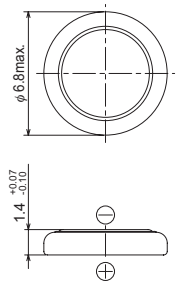

MS621FE

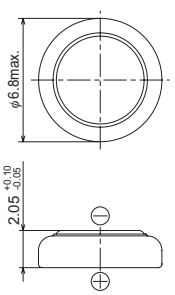

* Rechargeable batteries are all available without tabs.

- Units: mm
- The hatched parts are tin plated (Sn: 100%).

MS920T / MS621T

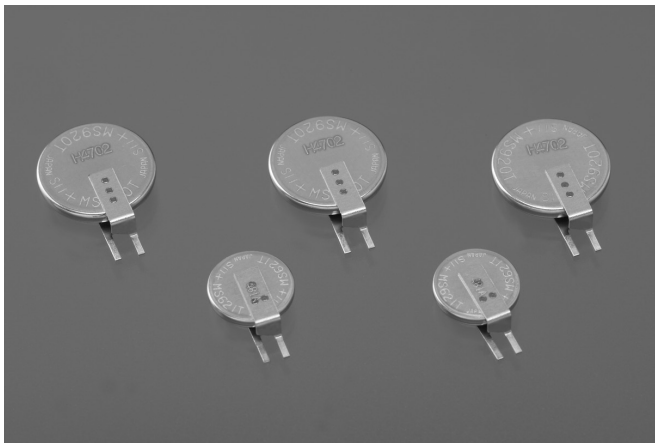

"MS621T" and "MS920T" have improved both higher and lower temperature characteristics while leaving features of the conventional MS rechargeable batteries. They offers wider temperature range from -40°C to 85°C.

FEATURES

- RoHS Compliant
- Approved by UL (Underwriters Laboratories Inc.)
  UL File No. MH15628

APPLICATIONS

Backup power for Real Time Clock, or memory

＜Application＞

Automotive equipment, Security cameras, electronic power, gas and water meters, electronic devices where PCB temperature increases.

SPECIFICATIONS

Type	Nominal Voltage (V)	Nominal Capacity (mAh)*1	Internal Impedance (Ω)*2	Operating Temperature Range	Size (mm)		Weight (g)
					Diameter	Height	
MS920T	3	6.5	60	–40°C to +85°C	9.5	2.0	0.45
MS621T	3	3.0	80	–40°C to +85°C	6.8	2.1	0.23

* Please confirm the operating conditions, etc. with your contact at SII. We would like to provide the detail characteristics of MS920T and MS621T.

*1. Nominal capacity: Typical value of discharge capacity between 3.1V and 2.0V

*2. Internal impedance is measured using an AC (Alternating Current) method at the fully charged state.

*3. A constant voltage charge is recommended, but due to a limit in charge current, it is necessary to insert a resistor to regulate the charge current.
Please see Page 19 for resister value. Contact us for further details.
If a constant current charge is required, contact us for more information.

MS Lithium Rechargeable Batteries are not reflowable. Please mount them on PCB by hand soldering.

CHARACTERISTICS

- **Discharge Characteristics (-40°C capacity)**

MS920T Discharge Characteristics

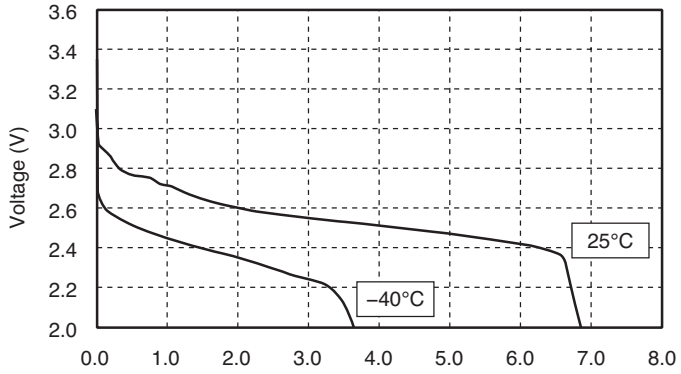

MS920T maintains about 3.5mAh at -40°C.

* Charge Discharge condition
Charge: 3.1V, 72 hours, max. 200 μA, RT
Discharge: 25 μA, c.o.v.=2.0V, RT

CHARACTERISTICS

・Discharge characteristics (-40°C capacity)

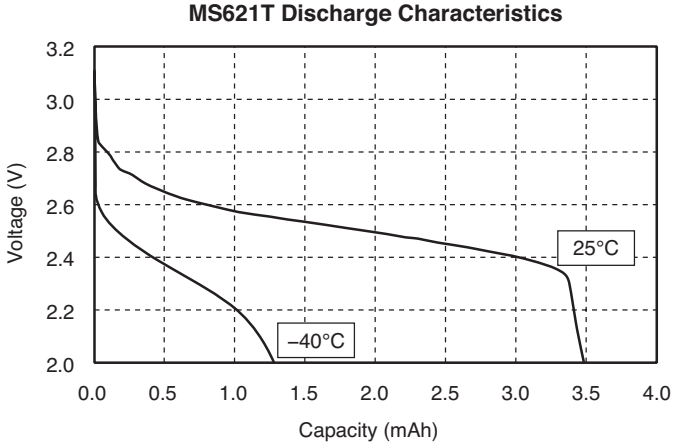

MS621T maintains about 1.2mAh at -40°C.

* Charge Discharge condition
Charge: 3.1V, 96 hours, max. 100μA, RT
Discharge: 15μA, c.o.v.=2.0V, RT

・High temperature characteristics (85°C storage)

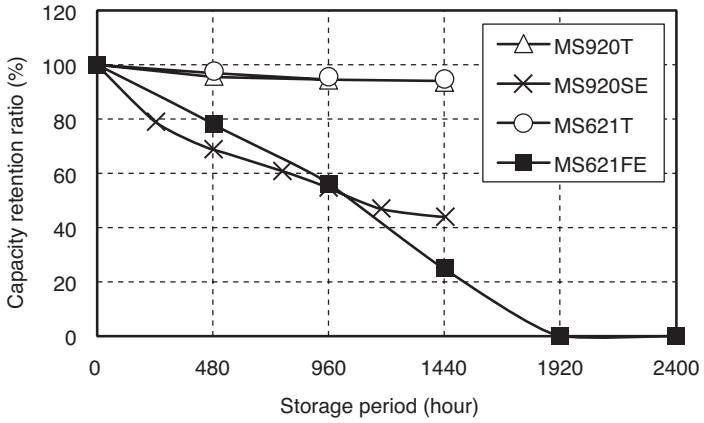

MS-T series's capacity retention ratio after High temperature storage were greatly improved.

* 85°C use of Conventional MS series is not guaranteed.

* Charge Discharge condition
MS920T
Charge: 3.1V, 72 hours, max. 200 μA, RT
Discharge: 25 μA, c.o.v.=2.0V, RT
MS621T
Charge: 3.1V, 96 hours, max. 100 μA, RT
Discharge: 15 μA, c.o.v.=2.0V, RT

・High temperature and high humidity characteristics (80°C90% storage)

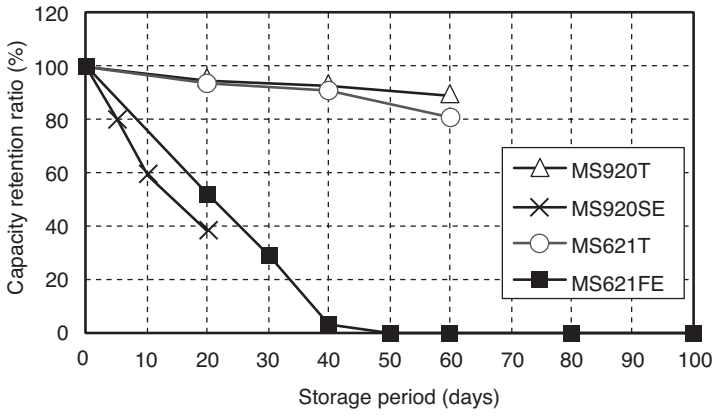

MS-T series's capacity retention ratio after High temperature and High humidity storage were greatly improved.

* 80°C use of Conventional MS series is not guaranteed.

* Charge Discharge condition
MS920T
Charge: 3.1V, 72 hours, max. 200 μA, RT
Discharge: 25 μA, c.o.v.=2.0V, RT
MS621T
Charge: 3.1V, 96 hours, max. 100 μA, RT
Discharge: 15 μA, c.o.v.=2.0V, RT

*c.o.v.…cut off voltage

TS920E / TS621E (Under Development)

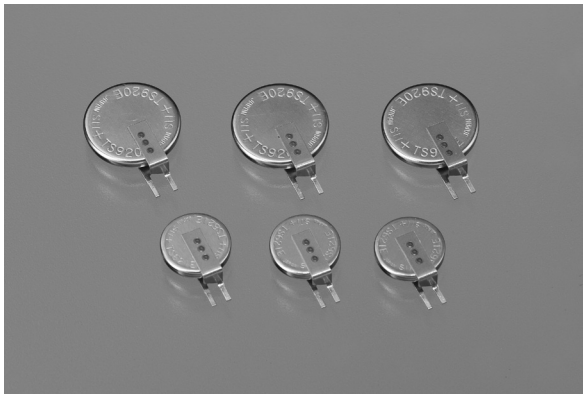

FEATURES

- Low-voltage rechargeable
- High capacity
- Long cycle life: at least 1000 cycles (20% D.O.D.)
- RoHS Compliant

TS lithium rechargeable batteries are high capacity 1.5V type non-reflowable rechargeable batteries that provide sufficient discharge capacity with a charge voltage of less than 2.0V.

SPECIFICATIONS

Type	Nominal Voltage (V)	Charge Voltage*3 (V)	Nominal Capacity (Voltage Range V) (mAh)	Internal Impedance*1 (Ω)	Standard Charge/ Discharge Current (mA)	Cycle Life*2 (Time)	Diameter (mm)	Height (mm)	Weight (g)
TS920E	1.5	1.6 to 3.0	5.5 (2.3 to 1.0)	20	0.05	1000 (20% D.O.D.)*4 100 (100% D.O.D.)	9.5	2.0	0.46
TS621E (Under development)	1.5	1.6 to 3.0	2.5 (2.3 to 1.0)				6.8	2.1	

*1. Value measured using an AC (Alternating Current) method in the fully charged state.
*2. Counts of charge and discharge repetition that maintains about 50% of the minimum guaranteed capacity
*3. A constant voltage charge is recommended, but due to a limit in the charge current, it is necessary to insert a resistor to regulate the charge current.
Please contact us for further details.
If a constant current charge is required, please contact us for more information.
*4. D.O.D. : Depth of Discharge

TS Lithium Rechargeable Batteries are not reflowable. Please mount them on PCB by hand soldering.

CHARACTERISTICS

• **Charge/discharge characteristics**

TS920E

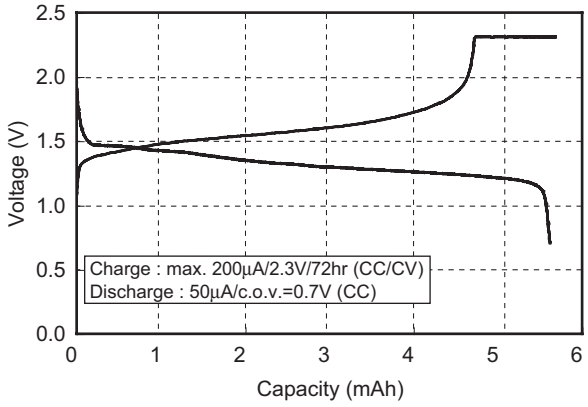

* c.o.v. : Cut off Voltage

CHARACTERISTICS

TS920E

Charge Voltage Characteristics

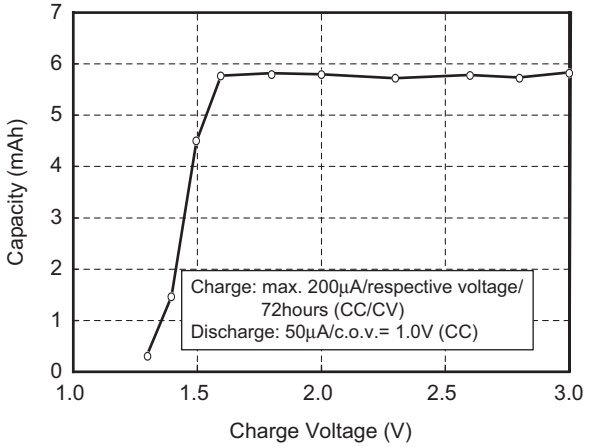

Temperature Characteristics

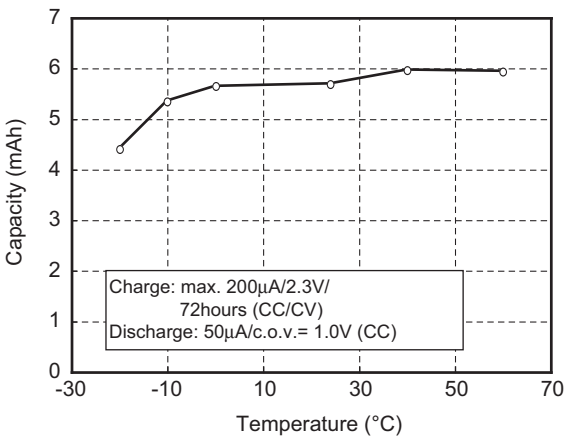

High Temperature Storage Characteristics (60ºC)

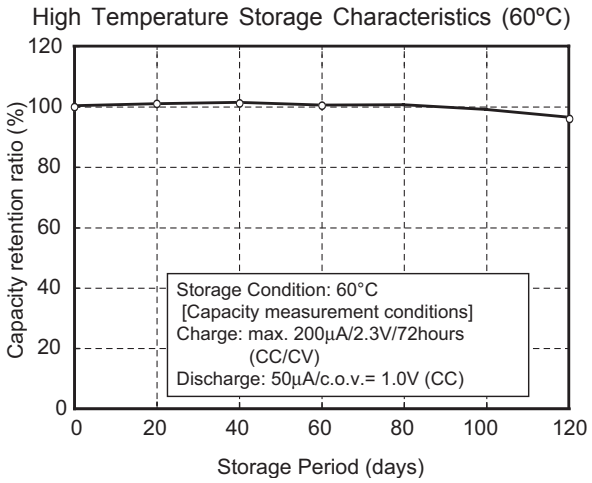

Float-Charge Characteristics (60ºC)

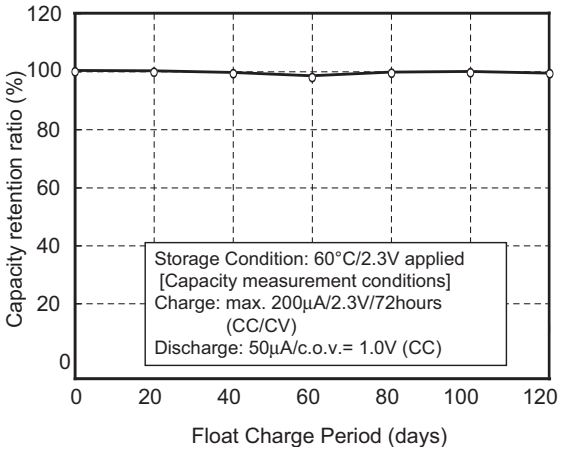

STANDARD TERMINALS

TS920E FL27E

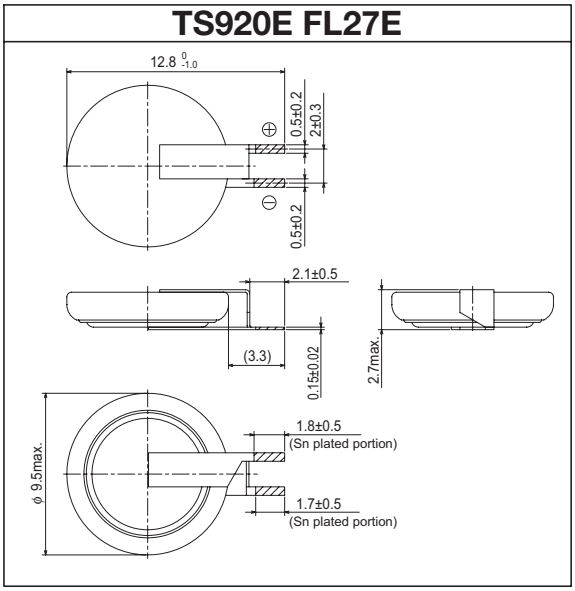

- Units: mm
- The hatched parts are tin plated (Sn: 100%).

CPH3225A

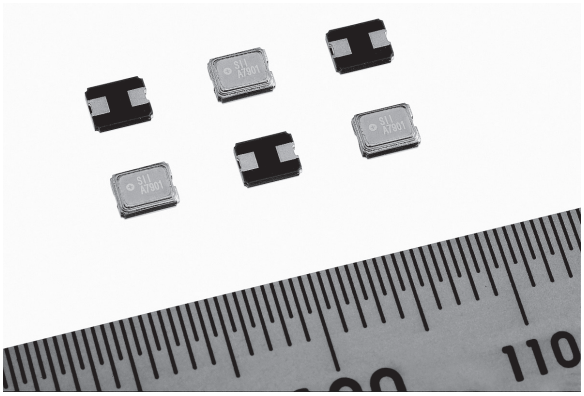

CPH3225A is thinnest and smallest chip-type electric double layer capacitor.
The unique ceramic packaging with superior air-tightness is used. As the result, it offers leakage resistance and humidity resistance. Also, by optimizing its materials, a 1 minute rapid charge stores approximately 85% of full capacity.
Its heat-resistant design allows for Pb-free reflowable SMT board attachment.

FEATURES

- Small and thin size
- Excellent leakage resistance and humidity resistance
- Pb-free reflowable:
  Superior heat resistance (260°C peak) allows reflow soldering by Pr-free solder
- Long cycle Life:
  At least 10,000 times of charge/discharge
- Simple Charging circuit (constant voltage charging)
- Wide operating temperature range:
  Operating temperature range: –20°C to +60°C
  For use the battery at a temperature out of the above temperature range, please consult us.
- RoHS Compliant

APPLICATIONS

Backup Power for various devices.
Super small size power supply.
Smartphone, Tablet, Cellphone, Personal computer, IC card, Game machine, Handy terminal, Video camera, various kinds of small appliance, etc.

SPECIFICATIONS

Type	Maximum Use Voltage (V)	Nominal Capacity (Voltage Range) Capacitance	Internal Impedance* <Nominal> (Ω)	Size(L × W × H) (mm)	Weight (g)
CPH3225A	3.3	4.6μAh (3.3V-1.8V) 0.011F	160	3.2 × 2.5 × 0.9	0.025

*. Value measured using AC (Alternating Current) method at the discharged state.

<APPLICATION NOTES>

- **Prohibition ripple charging**
  A ripple (high frequency fluctuation of voltage) in the charge voltage extremely lowers the capacitor performance.
  Be sure to charge capacitors with a stable voltage.
- **Charge voltage**
  The age deterioration of the capacitor depends on the charge voltage.
  The age deterioration is accelerated as charge voltage goes higher.
- **Usage environment**
  Aging degradation of the capacitor varies depending on the usage environment (temperature and humidity).
  Contact us for further details.

CHARACTERISTICS

Charge/discharge characteristics

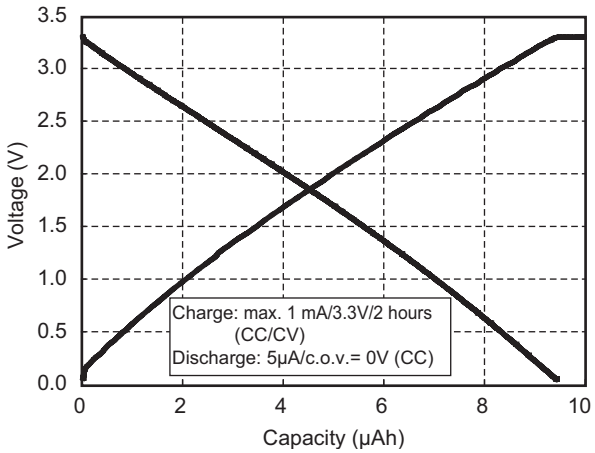

* c.o.v. : Cut off Voltage

CHARACTERISTICS

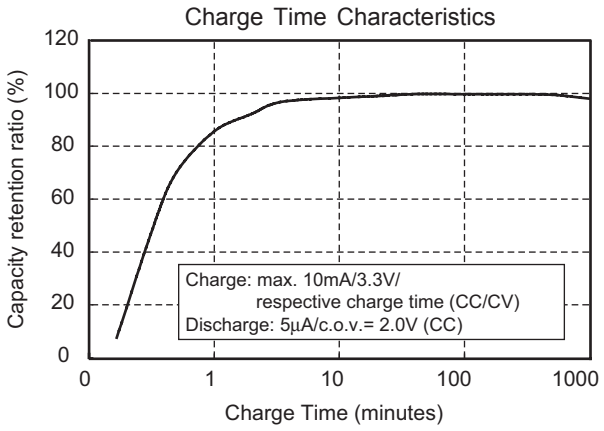

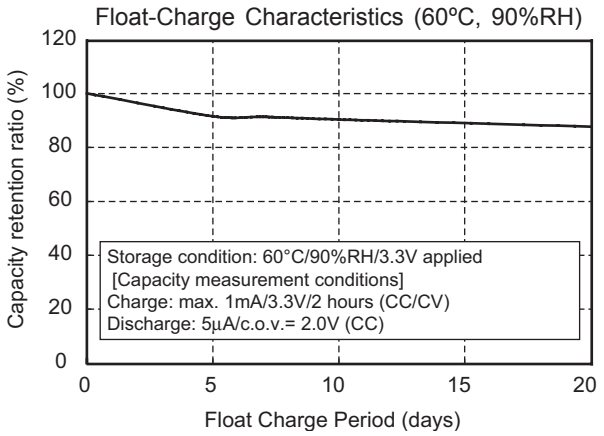

REFLOW SOLDERING CONDITIONS

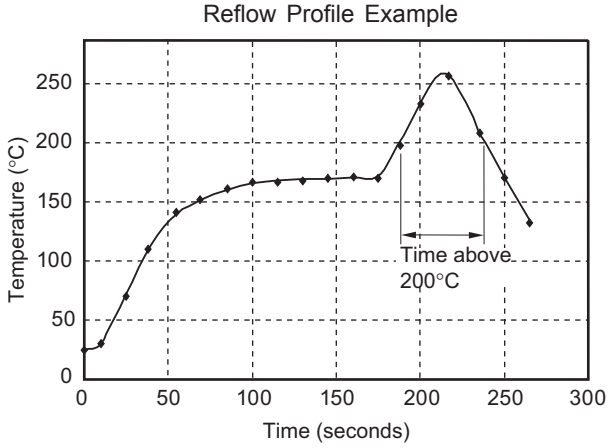

The times of repeated reflow soldering must be two times or less.
The Temperature must be measured at top of the cell.

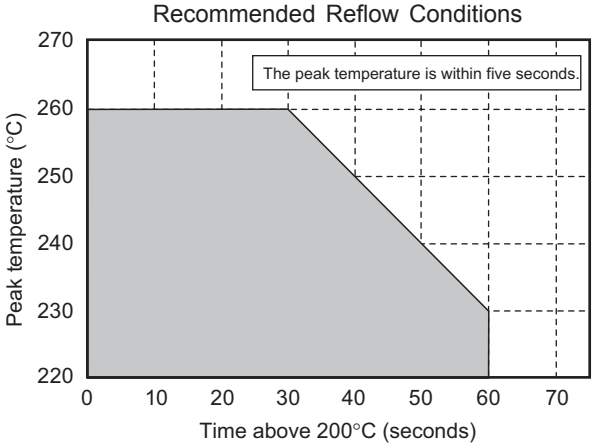

Max. 260°C (within 5 seconds)

DIMENSIONS

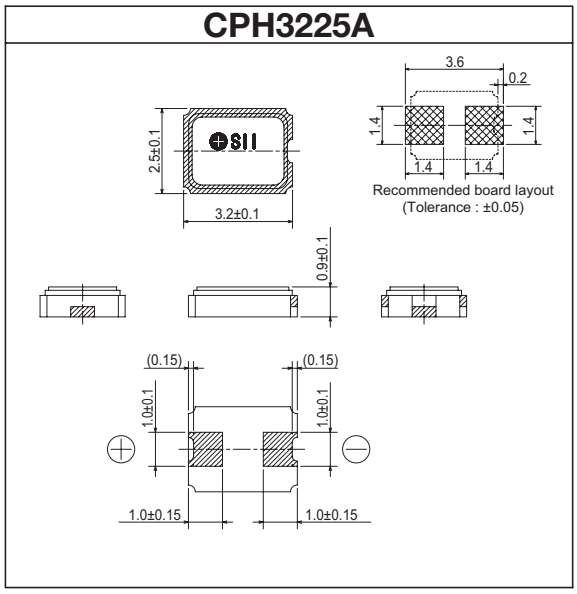

- Units: mm

XH311HG/XH311HU/XH414HG

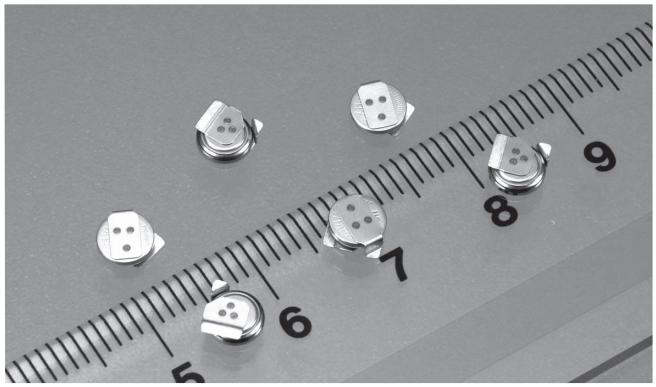

The XH series capacitor has a better discharge characteristic above 3V. It is an environmentally friendly product that is reflow mounted by Pb-free soldering. It features high capacity, and long-term reliability, as well as a wide operating voltage range. It is thus suitable for backup power supply of clock and memory functions on mobile and information devices.

FEATURES

- Pb-free reflowable:
  Superior heat resistance (260°C peak) allows reflow soldering by Pb-free solder
- Wide operating voltage range from 0V to 3.3V
- High capacity: 0.08F with “414” size
- Long Cycle Life:
  At least 10,000 times of charge/discharge
- Simple charging circuit (constant voltage charging)
- Wide operating temperature range:
  Operating temperature range: –20°C to +60°C
  For using the battery at a temperature out of the above temperature range, please consult us.
- RoHS Compliant

APPLICATIONS

Backup power supply for memory and clock functions of smartphone, tablet, cellphone, PHS, cordless phone, digital still camera, game machine, and printer, etc.

SPECIFICATIONS

Type	Electrical Specifications (Normal Temperature)*1			Size		Weight (g)
	Maximum Use Voltage (V)	Capacitance (F)	Internal Impedance*2 (Ω)	Diameter (mm)	Height (mm)	
XH311HG	3.3	0.02	300	3.8	1.1	0.04
XH311HU	3.3	0.035	150	3.8	1.1	0.04
XH414HG	3.3	0.08	100	4.8	1.4	0.06

*1. Normal temperature: 23°C ± 3°C. Electrical characteristics and aging degradation of the products depend on temperature.
*2. Value measured using AC (Alternating Current) method at the discharged state.

<APPLICATION NOTES>

- **Prohibition ripple charging**
  A ripple (high frequency fluctuation of voltage) in the charge voltage extremely lowers the capacitor performance.
  Be sure to charge capacitors with a stable voltage.
- **Charge voltage**
  The age deterioration of the capacitor depends on the charge voltage.
  The age deterioration is accelerated as charge voltage goes higher.
- **Usage environment**
  Aging degradation of the capacitor varies depending on the usage environment (temperature and humidity).
  Contact us for further details.

CHARACTERISTICS

Charge/discharge characteristics

XH311HG

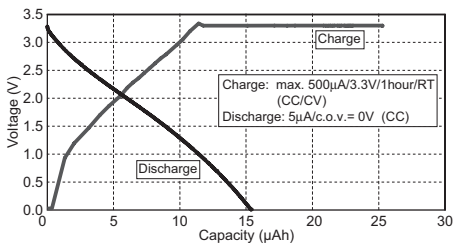

XH311HU

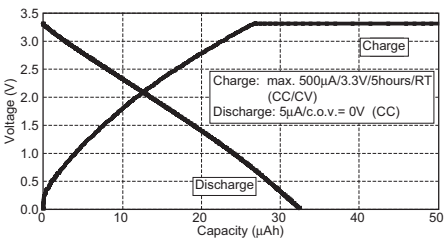

XH414HG

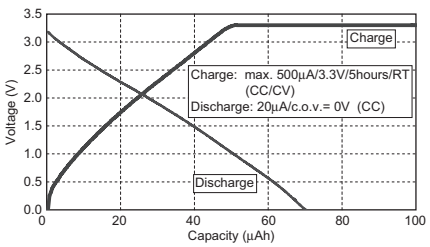

*c.o.v.…Cut off Voltage

CHARACTERISTICS

XH414HG

Charge Time Characteristics

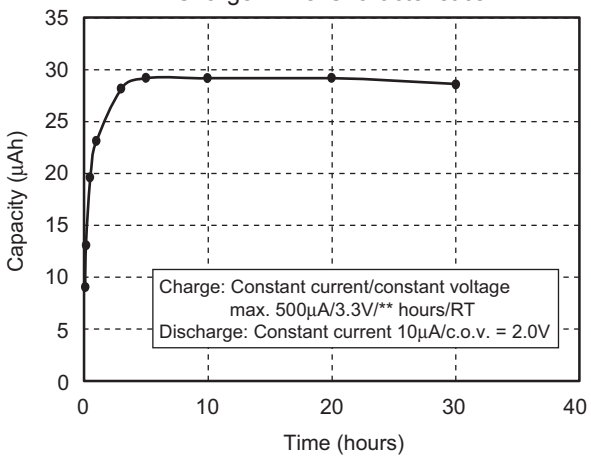

Discharge Current Characteristics

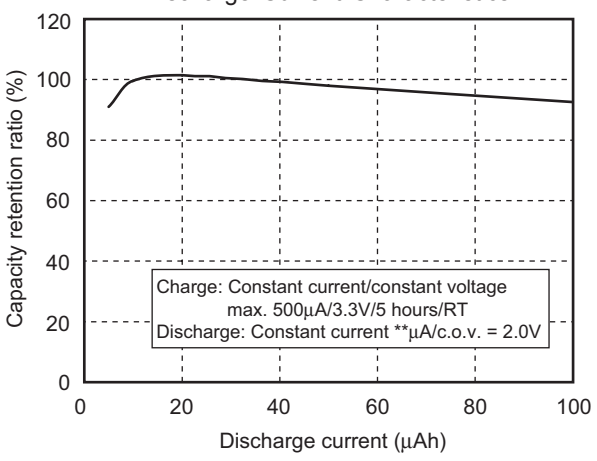

Temperature Characteristics

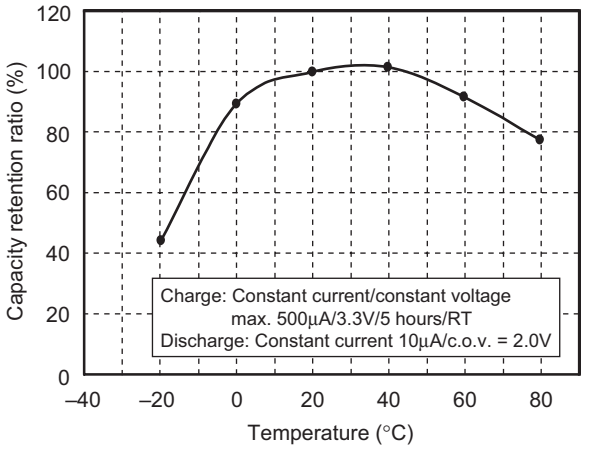

Float-Charge Characteristics (60ºC, 50%RH)

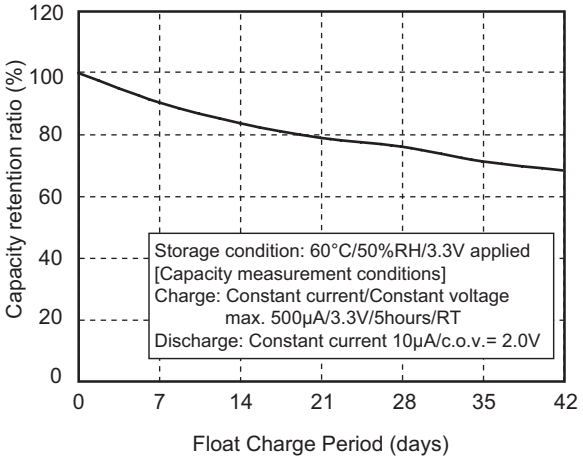

REFLOW SOLDERING CONDITIONS

Reflow Profile Example

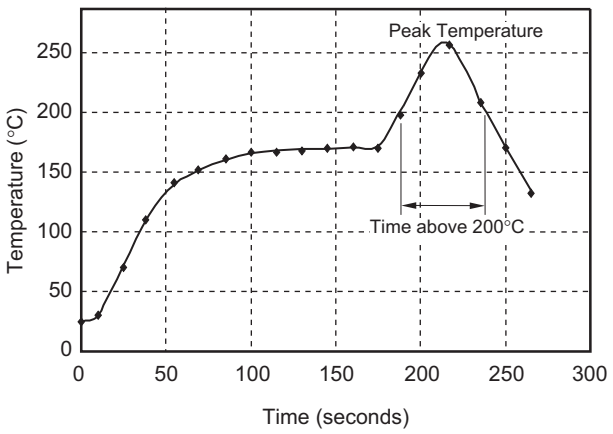

The times of repeated reflow soldering must be two times or less.
The Temperature must be measured at top of the cell.

Recommended Reflow Condition

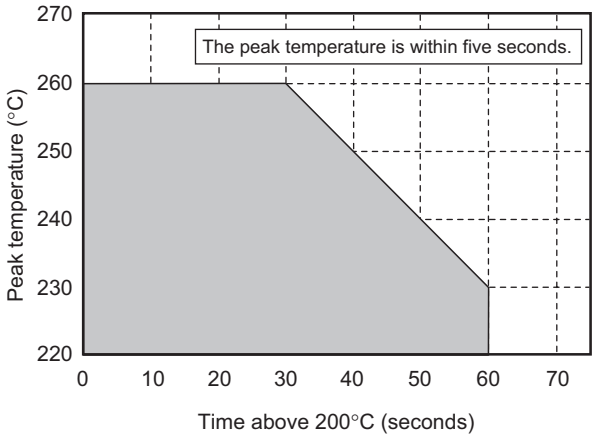

Max.260°C (within 5 seconds)

STANDARD TERMINALS

XH311HG IV07E
XH311HU IV07E

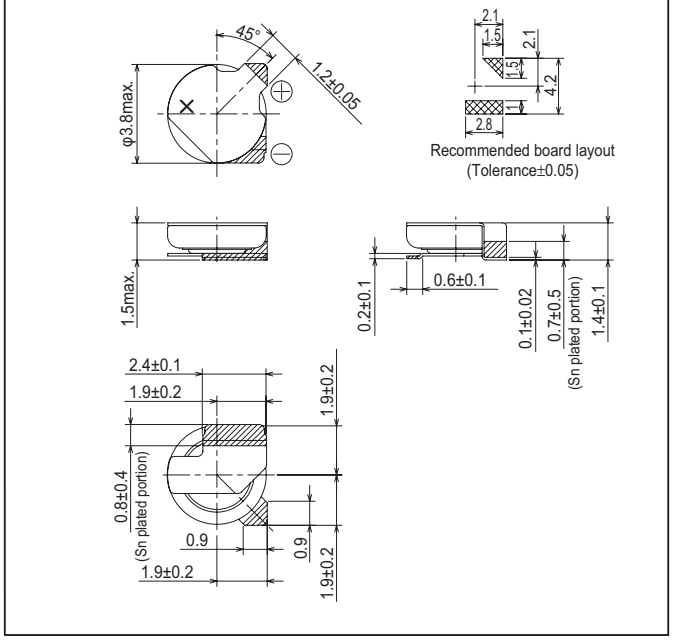

XH414HG IV01E

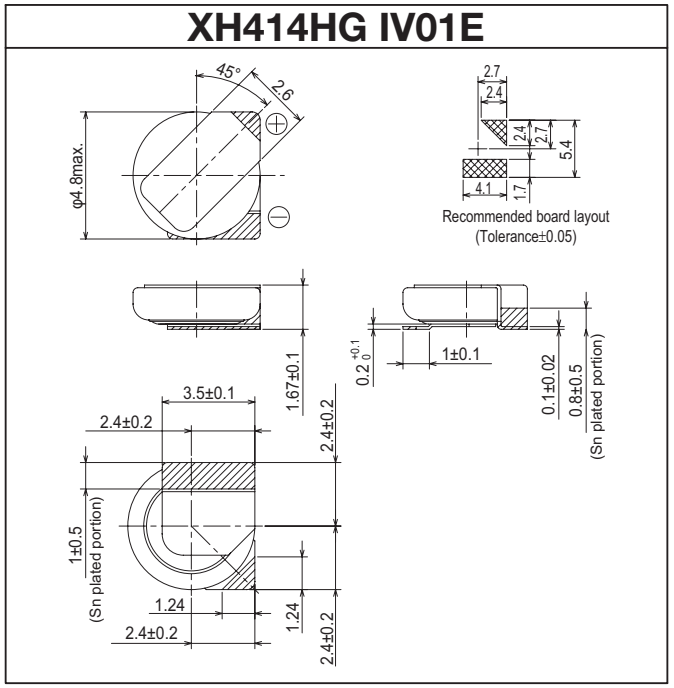

- Units: mm
- The hatched parts are tin plated (Sn: 100%).

1. Charging circuit for MS Lithium Rechargeable Battery

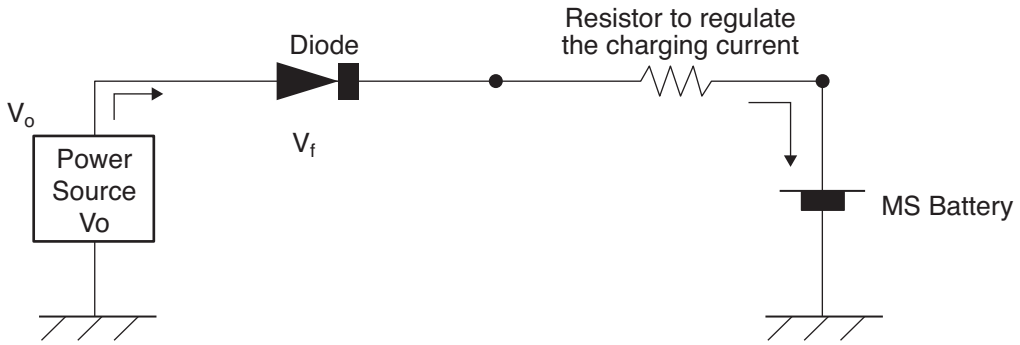

A resistor must be inserted to regulate the charging current, because our rechargeable batteries have a limit for charging current.
Please see the below table for recommended resister values.
Those values are minimum for each battery type and "Vo" in the charging circuit.
For example, MS614SE and Vo 3.3V, the resister value should be 620 ohm or more.
Please use a diode that has very low Vf (forward voltage drop), to prevent losing the actual charging voltage to MS battery.
The charging voltage "Vo" must Not be higher than 3.3V.

Table of minimum resistor values.

	MS414GE	MS412FE	MS518SE	MS614SE	MS621FE MS621T	MS920SE MS920T
Vo	Resistor	Resistor	Resistor	Resistor	Resistor	Resistor
(V)	(ohm)	(ohm)	(ohm)	(ohm)	(ohm)	(ohm)
3.3	2,000	2,000	1,500	620	620	620
3.2	1,600	1,600	1,000	430	430	430
3.1	1,600	1,600	820	330	330	330
3.0	1,500	1,500	750	300	300	300
2.9	1,500	1,500	750	300	300	300
2.8	1,500	1,500	750	300	300	300

Discharge capacity depends on charging voltage (Please see Page 7)
Lower than 3V charging may cause lower discharge capacity.

For TS Lithium Rechargeable Battery or other batteries, please contact us.

2. Charging circuit for XH capacitor and CPH capacitor



You do not need to insert a resister to regulate charging current.
Our XH capacitor or CPH capacitor do not have a limit for charging current.
The charging voltage "Vo" must Not be higher than 3.3V.
Please use a diode that has very low Vf (forward voltage drop), to prevent losing the actual charging voltage to capacitor.
This guidance is for XH capacitors and CPH capacitors.
For CPX capacitor or other capacitors, please contact us.

CPX10080C (Under Development) / CPZ10080C (Under Development) / CPX3225A

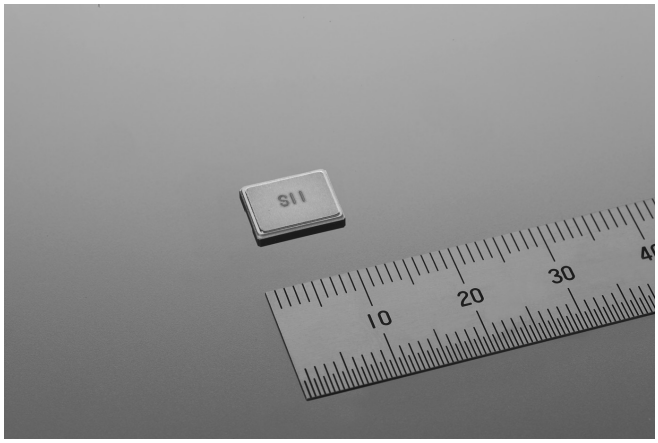

CPX Capacitors are chip-type Electric Double Layer Capacitor (EDLC) that offer lower internal impedance and reducing the amount of leak current.
CPX Capacitors allow discharge current up to several hundreds of mAs and super rapid charging by weak electromotive force.

Features

1. Large discharge current and super rapid charging achieved by low internal resistance
   By reducing the internal impedance to 0.5 Ω / 1.5 Ω, the new chip-type EDLCs allow discharge current of up to several hundreds of mAs. The super rapid charging type CPX10080C402F is able to charge within a few seconds.

2. 10 nA level of leak current (CPX10080C104F)
   Reduced leak current to about 10 nA level, CPX10080C104F allows sufficient charging with several micro watts of energy harvesting power source.

3. Long life span, high reliability
   Superior air-tight ceramic package reduces storage deterioration in high temperature / high humidity environments, assuring long term reliability.

4. Reflowable, small and thin
   The chip-type design makes it possible to reflow when it is applied in the mass production. The size is 10.0mm x 8.0 mm x 1.9 mm.

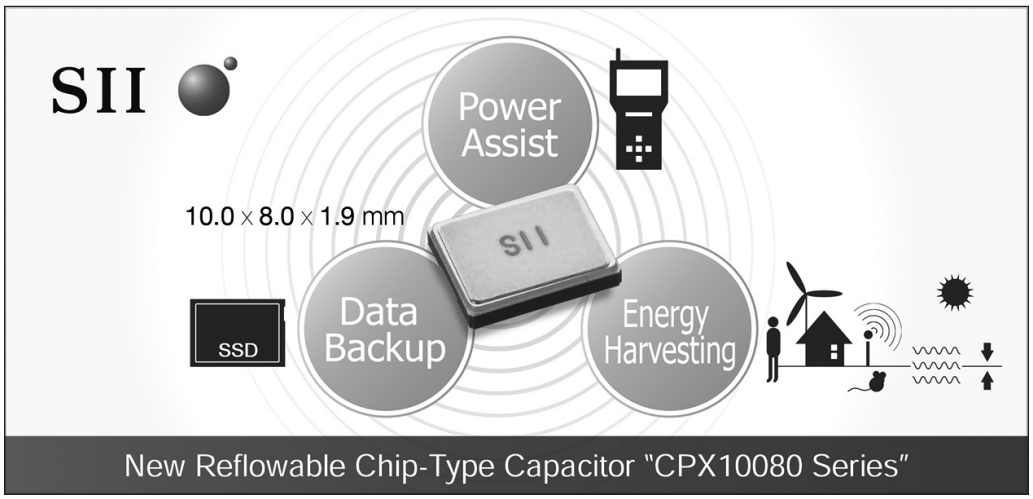

APPLICATIONS

- Power backup of instantaneous battery detachment
- Power assist for main battery
- Electric storage device for energy harvesting
- Peak load leveling of primary battery

Suggested Applications

- Handy terminals, Payment terminals
- Wireless sensor network devices
- NFC-enabled mobile devices
- Battery powered medical devices etc.

SPECIFICATIONS

Par number	Maximum Use Voltage (V)	Capacitance (mF)	Internal Impedance (ESR) (Ω)	Size (LxWxH) (mm)	Operating Temperature Range	Weight (g)
CPX10080C104F (Under Development)	2.5	100	0.5	10.0×8.0×1.9	-40°C to +70°C	0.45
CPZ10080C104F (Under Development)	3.3	100	1.5	10.0×8.0×1.9	-30°C to +60°C	0.45
CPX10080C402F (Under Development)	2.5	4	0.5	10.0×8.0×1.9	-40°C to +70°C	0.45
CPX3225A752D	2.6	7.5	25	3.2×2.5×0.9	-30°C to +70°C	0.024

CHARACTERISTICS

Discharge characteristics (100mA)

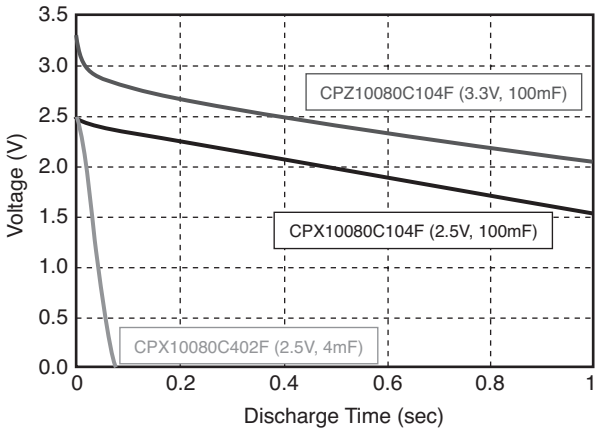

Both CPX10080C104F and CPZ10080C104F can keep those voltages above 1.5V with 100mA discharge for one second from their fully charged state.

Charge characteristics (10mA)

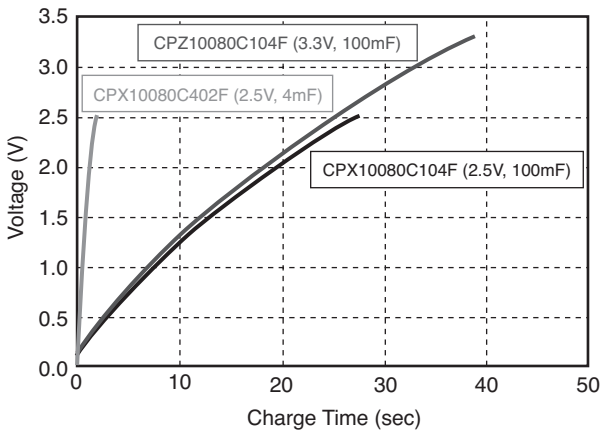

The super rapid charging type CPX10080C402F reaches 2.5V in approx. 2 seconds when it is charged by 10 mA.



SEIZAIKEN, Silver Oxide Batteries by Seiko Instruments Inc., has grown with the history of quartz watches. Silver Oxide Batteries have high density of energy per volume and are able to supply stable voltage for a long time. SEIZAIKEN Batteries are suitable to power BLE(Bluetooth Low Energy), wearable devices, and information devices.

FEATURES

- Able to discharge mA level of pulse current
- Small diameter (11.6mm and less)
  - Height ranges from 1.25mm to 5.4mm.
  - Diameter ranges from 4.8mm to 11.6mm.
- Large energy density

APPLICATIONS

Devices that require high discharge pulsing
<Examples>
Stylus pen for tablets, disposable devices, thermometers, ...

SPECIFICATIONS

Type	Nominal Voltage (V)	Nominal Capacity (mAh)	Discharge Level	Dimensions (mm)		Weight (g)
				Diameter	Height	
SR ** SW	1.55	5.5 to 160	Low current	4.8 to 11.6	1.25 to 5.40	0.11 to 2.20
SR ** W	1.55	28 to 160	High current	6.8 to 11.6	2.05 to 5.40	0.39 to 2.20

CHARACTERISTICS

- **Comparisons at 10mA for1 sec Pulse Discharge and c.o.v.2.0V**

SR920W (2 pcs in series)

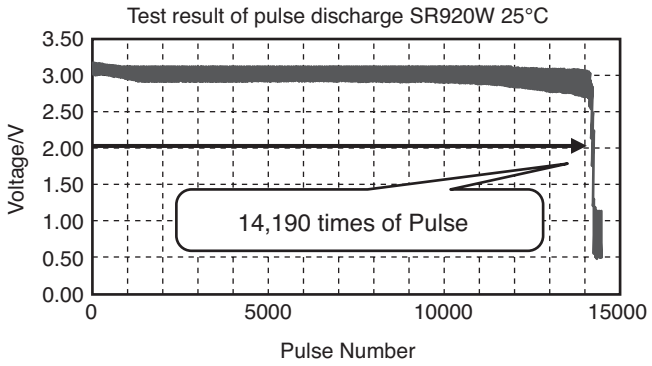

CR1025

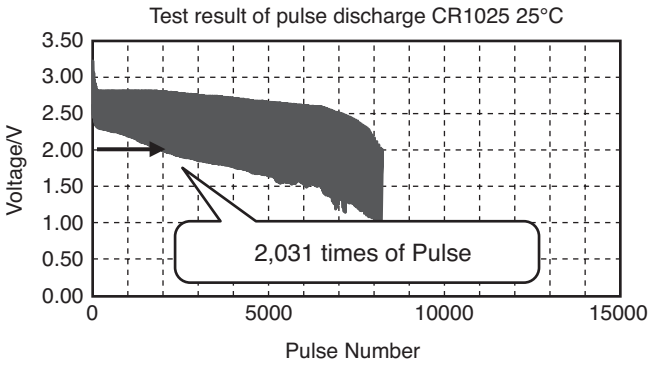

SEIZAIKEN is our trademark for silver oxide battery globally acknowledged in the quartz watch market.

• Low Drain Battery

Model		Characteristics (RT)			Dimensions		Weight (g)	C.C.V.*2	
JIS code	IEC code	Nominal Voltage (V)	Standard*1 Capacity (mAh)	Standard Discharge Current (μA)	Diameter (mm)	Height (mm)		at 24°C (V)	at −10°C (V)
SR416SW	337	1.55	7.5	10	4.8	1.65	0.11	1.35	1.10
SR421SW	348	1.55	12	20	4.8	2.15	0.14	1.35	1.10
SR512SW	335	1.55	5.5	5	5.8	1.25	0.15	1.45	1.10
SR516SW	317	1.55	12.5	20	5.8	1.65	0.18	1.45	1.10
SR521SW	379	1.55	13 16	20 30	5.8	2.15	0.23	1.45	1.10
SR527SW	319	1.55	22	40	5.8	2.70	0.29	1.45	1.10
SR616SW	321	1.55	16	20	6.8	1.65	0.25	1.45	1.10
SR621SW	364	1.55	21 23	30 40	6.8	2.15	0.32	1.45	1.20
SR626SW	377	1.55	24 28 30	30 40 40	6.8	2.60	0.39	1.45	1.20
SR712SW	346	1.55	10	10	7.9	1.25	0.26	1.45	1.20
SR716SW	315	1.55	21	30	7.9	1.65	0.33	1.45	1.20
SR721SW	362	1.55	23 28	40 40	7.9	2.10	0.42	1.45	1.20
SR726SW	397	1.55	34	40	7.9	2.60	0.52	1.45	1.20
SR731SW	329	1.55	36	50	7.9	3.10	0.56	1.45	1.20
SR41SW	384	1.55	45	50	7.9	3.60	0.67	1.45	1.20
SR912SW	–	1.55	15	20	9.5	1.25	0.40	1.45	1.20
SR916SW	373	1.55	27	50	9.5	1.65	0.51	1.45	1.20
SR920SW	371	1.55	46 35	60 50	9.5	2.05	0.60	1.45	1.20
SR927SW	395	1.55	53 60	80 100	9.5	2.70	0.75	1.45	1.20
SR936SW	394	1.55	85	140	9.5	3.60	1.10	1.45	1.20
SR1120SW	381	1.55	53	80	11.6	2.05	0.93	1.45	1.20
SR1130SW	390	1.55	80	100	11.6	3.05	1.29	1.45	1.20
SR43SW	301	1.55	120	150	11.6	4.20	1.75	1.45	1.20
SR44SW	303	1.55	160	180	11.6	5.40	2.20	1.45	1.20

*1 The standard capacity is calculated by the measurement result of discharging time with the standard discharge current to the voltage 1.2V.
*2 C.C.V.: Closed Circuit Voltage / Low Drain 2kΩ 7.8msec Pulse

• HIGH Drain Battery

Model		Characteristics (RT)			Dimensions		Weight (g)	C.C.V.*2	
JIS code	IEC code	Nominal Voltage (V)	Standard*1 Capacity (mAh)	Standard Discharge Current (μA)	Diameter (mm)	Height (mm)		at 24°C (V)	at −10°C (V)
SR626W	376	1.55	28	50	6.8	2.60	0.39	1.35	0.95
SR721W	361	1.55	26	50	7.9	2.10	0.41	1.35	1.05
SR726W	396	1.55	34	50	7.9	2.60	0.52	1.35	1.05
SR41W	392	1.55	45	80	7.9	3.60	0.67	1.35	1.05
SR920W	370	1.55	42	80	9.5	2.05	0.60	1.40	1.00
SR927W	399	1.55	53 60	90 110	9.5	2.70	0.75	1.40	1.05
SR1120W	391	1.55	53	90	11.6	2.05	0.93	1.40	1.20
SR1130W	389	1.55	80	130	11.6	3.05	1.29	1.40	1.20
SR43W	386	1.55	120	220	11.6	4.20	1.75	1.40	1.20
SR44W	357	1.55	160	250	11.6	5.40	2.20	1.40	1.20

*1 The standard capacity is calculated by the measurement result of discharging time with the standard discharge current to the voltage 1.2V.
*2 C.C.V.: Closed Circuit Voltage / High Drain 200Ω 5sec DC

CHECK SHEET

If you are considering the purchase of one or more of our microbatteries or capacitors, please complete this check sheet and send it to us. We will let you know which products will be optimum for you to use.

Fax Sheet

Micro-Energy Division Sales Sec. +81-43-211-8034 Battery Sales Person

1. Your company name

2. Which application do you use?

3. Your expected backup period
hour / day / month

4. Your requested delivery date
mm / yy

5. Operation voltage of the device for backup
V to V

6. Consumption current at backup time
mA • μA

7. Setting value of charging voltage
V

8. Presence of reverse current protection diode
Yes • No

9. Vf characteristics of the reverse current protection diode (at 10μA)
V

10. Resistance value of charging protection resistance
Ω

11. Limit of charging time

12. Required cycle life
times

13. Other requests

14. Expected life (e.g., xx years or backup for xx hours)

15. Ambient temperature and humidity

Your contact information

Name

Section

Phone

Fax

E-mail

Environmental Activities at Micro-Energy Division

Environment & Quality Policy

Seiko Instruments Inc., Micro-Energy Division is located in Ayashi, a city with beautiful nature, in Miyagi Prefecture. Our aim is to provide customer satisfaction and harmony with the environment through all our products, from Micro battery to other electronic products, and sales activities.

1. We adhere firmly to laws, regulations and customers' specified requirements.
2. We aim to prevent pollution, to reduce CO_2, and to conserve biodiversity.
3. We set goals, take actions, conduct regular reviews, and improve the system and performance continuously.
4. We contribute to the society by supporting green procurement, developing green products, and promoting green life activity.
5. We adhere to regulations and recommodations regarding Chemical substance content in our products and will promote reduction and replacement.
6. We vigorously educate ourselves and try to engage voluntarily in green life activity.

Based on the above policy, the following six environmental approaches are now being implemented throughout Micro-Energy Division.

1. Enrich the line up of Eco-Products

- We introduced the SII Green Product Label System which is equivalent to the ISO 14021 Type II environmental label. At the end of FY2006, 100% of our products are certified as SII Green Products. In addition, 38 products are certified as SII "High Grade" Green Products.

2. Reduction of Greenhouse Gas

- We practice various CO_2 reduction measures like using Eco-machinery. Since 1997, we have successfully reduced a total of 57,500 tons of CO_2. We believe our efforts contribute to the prevention of global warming.

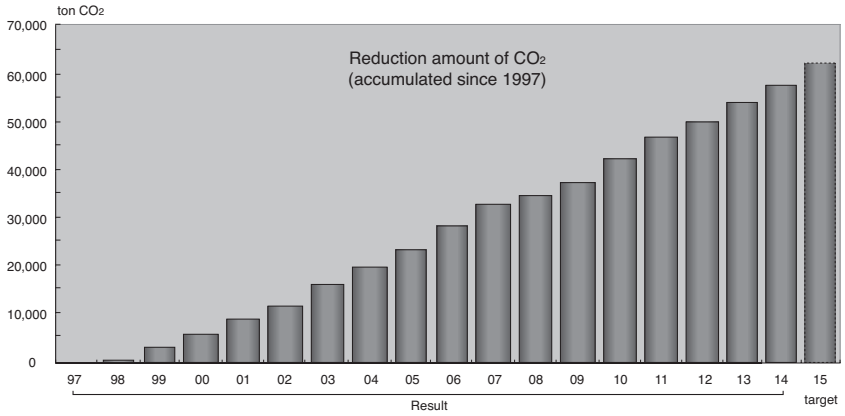

3. 3R Promotion Activity

- We have promoted the "reduce and reuse" activities and also promoted recycling at the end of the production process. With these activities, we achieved "Zero-emission" in 2004. We have reduced the non-recyclable wastes to less than 1 ton - less than 1% of our 1997 results.

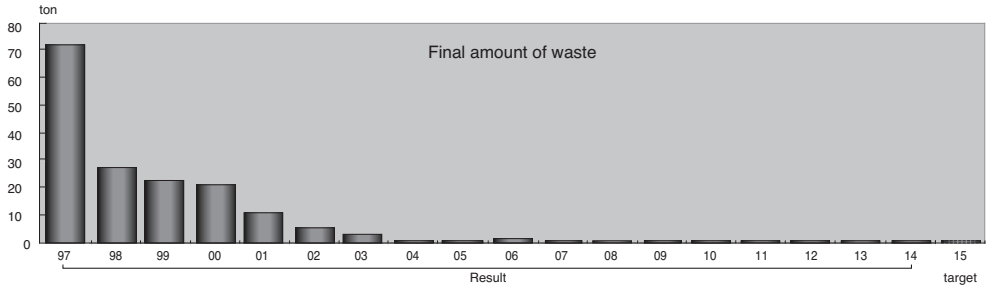

4. Biodiversity Conservation

- We endeavor to deepen our understanding on the relevancy between biodiversity and our business activities, and to contribute to the conservation of biodiversity by participating local community activities.

5. Green Purchasing

- We adhere to a green purchasing campaign through the purchase of ingredients, manufacturing materials, and other necessary products, whenever appropriate.

6. Green Life

- With the participation of all of Micro-Energy Division members, we deploy a clean-up and beautification campaign in all areas surrounding our factory once a year. In addition, we participate in the clean up activity at Hirose River once a year.

7. Conflict Minerals

- Recognizing the international importance of conflict minerals issue, we prohibit the use of such minerals.

Precautions for Your Safety

Micro-Energy Division Lithium rechargeable batteries (MS, TS) contain flammable organic solvents. For your safety, please follow the following precautions.

⚠ WARNING!

- **Do not charge by higher current or higher voltage than specified.**
  Doing so may generate gas inside the battery, resulting swelling, fire, heat generation or bursting.
- **Do not heat, disassemble nor dispose of in fire**
  Doing so damages the insulation materials and may cause fire, heat generation, leakage or bursting.
- **Do not solder directly to the battery**
  If soldering is performed directly to the battery, the battery is heated up, consequently causing leakage, explosion or fire due to overheating from internal short-circuit.
- **Do not short.**
  If the (+) and (-) come into contact with metal materials, short-circuit occurs. As a result, fire, heat generation, leakage or bursting may occur.
- **Keep batteries out of children's reach.**
  It is dangerous that children swallow the battery.
  When you design mechanical hardware around the battery, please fix the battery firmly in order to prevent children from removing it.
  When you store the batteries, please keep the batteries out of children's reach.
  If a battery is swallowed, consult a physician immediately.
- **Do not reverse placement of (+) and (-)**
  If the (+) and(-) side of the battery is reverse inserted, it may cause a short-circuit or over discharge of the battery on some equipment and it may induce overheating, explosion or fire.
- **Do not weld terminals to the battery**
  The heat by welding may cause fire, heat generation, leakage or bursting.
  We weld standard terminals under strictly controlled conditions.
  If you need to weld terminals to the battery, please consult us in advance.
- **Do not discharge by force**
  If the battery is discharged by direct connection to an external power supply etc., voltage of the battery will decline lower than 0 volts (electrical reversal) and will cause the battery case to expand, overheat, leak, explode or burn.
- **In case of leakage or a strange smell, keep away from fire to prevent ignition of any leaked electrolyte.**
- **In case of disposal, insulate between (+) and (-) of battery by an insulating material.**
  Jumbling batteries or with other metal materials cause short-circuit. As a result, fire, heat generation, leakage or bursting may occur.

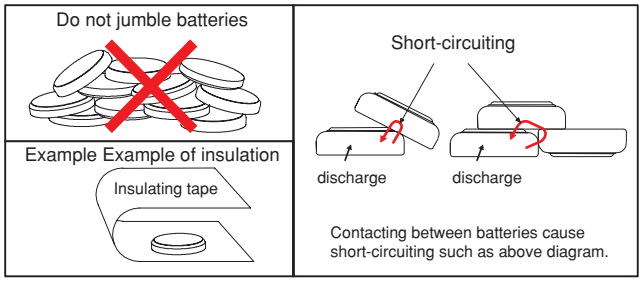

⚠ CAUTION!

- **If leaked liquid gets in the eyes, wash them with clean water and consult a physician immediately.**
- **Do not use new and used batteries together. Do not use different types of batteries together.**
  It may cause fire, heat generation, leakage or bursting.
- **If you connect two or more batteries in series or parallel, please consult us in advance.**
  It may cause bursting or fire due to unbalanced load or voltage.
- **Do not use nor leave the batteries in direct sunlight nor in high-temperature areas.**
  It may cause fire, heat generation, leakage or bursting.
- **Do not apply strong pressure to the batteries nor handle roughly.**
  It may cause fire, heat generation, leakage or bursting.
- **Avoid contact with water.**
  It may cause heat generation.
- **Keep batteries away from direct sunlight, high temperature and humidity.**
  It may cause heat generation or performance deterioration.
- **Do not make batteries airtight by sealing it with adhesive agent or coating agent.**
  It may cause short-circuit because of generated and accumulated electrolyte gas.

For prevention of performance deterioration of battery

- **Pay attention to mat or sheet for ESD**
  Battery with tabs or battery on PCB may short-circuit on the mat for ESD. As a result the voltage of the cell is reduced.
- **Pay attention to soldering by tips**
  Do no touch the battery by solder chips, when soldering another components after equipping battery.
  Keep any high temperature process away from battery.
- **Pay attention to material of jig for pick and place**
  Use non-conductive material of jig for pick and place of batteries, for short-circuit protect. If short-circuit of battery occurs, the voltage of battery drops down quickly but raises gradually.
- **Pay attention to washing and drying**
  Some detergent or high temperature drying may cause deteriorate of battery. If you need to wash batteries, consult us.

International Transportation and Disposal

International Air/Marine/Ground Transportation

Regarding the transport of Lithium battery, organizations like IATA, ICAO, IMO, DOT have determined transport regulations, based on the United Nations Regulations.
The SII Lithium rechargeable batteries can be transported being not subject to the provisions of dangerous goods, if they meet the following requirements.
(a) **<Caution Label>** Lithium battery handling label (IATA Dangerous Goods Regulations Figure 7.4.I) must be put on each package.
(b) **<Not Restricted Declaration>** Each shipment must be accompanied with a document indicating that the packages contain Lithium batteries, that the packages must be handled with care, and that special procedures should be followed in the event the package is damaged, and a telephone number for additional information.
(c) **<Weight Limit>** Except in the case of packed with equipment, package may not exceed 2.5 kg gross mass.
(d) **<Strong Packaging>** Batteries are separated so as to prevent short-circuit and are packed in strong packaging.
(e) **<Package Drop Test>** Each packages is capable of withstanding a 1.2m drop test in any orientation without damage to batteries contained.
For further information, please consult with us.

Disposal

Recent environment protection concerns have increased globally and waste and recycling are regulated in the world. The current regulations differ in each country, state and local municipality. Please consult local regulations and authorities for recommended disposal of batteries. If you are in question of application or safety of our batteries, please consult your local authorities.

Micro-Energy Division capacitors (XH, CPH, CPX) contain flammable organic solvents. For your safety, please follow the following precautions.

⚠WARNING!

- **Do not charge by higher current or higher voltage than specified.**
  Doing so may generate gas inside the capacitor, resulting in swelling, fire, heat generation or bursting.
- **Do not reverse placement of (+) and (-)**
  SII capacitors have polarity. If the (+) and (-) side of the capacitor is reverse inserted, it may cause short-circuit or over discharge of the capacitor on some equipment and it may induce overheating, explosion or fire.
- **Do not solder directly to the capacitor (for XH only)**
  If soldering is performed directly to the capacitor, the capacitor will over heat and, consequently cause leakage, explosion or fire due to overheating from internal short-circuit.
- **Keep capacitors out of children's reach.**
  It is dangerous that children swallow the capacitor.
  When you design mechanical hardware around the capacitor, please fix the capacitor firmly in order to prevent children from removing it.
  When you store the capacitors, please keep the capacitors out of children's reach. If a capacitor is swallowed, consult a physician immediately.
- **Do not heat, disassemble nor dispose of in fire**
  Doing so damages the insulation materials and may cause fire, heat generation, leakage or bursting.
- **Do not discharge by force**
  If the capacitor is discharged by direct connection to an external power supply etc., voltage of the capacitor will decline lower than 0 volts (electrical reversal) and will cause the capacitor case to expand, overheat, leak, explode or burn.
- **In case of leakage or a strange smell, keep away from fire to prevent ignition of any leaked electrolyte.**

⚠CAUTION!

- **If leaked liquid gets in the eyes, wash them with clean water and consult a physician immediately.**
- **Do not use nor leave the capacitors in direct sunlight nor in high-temperature areas.**
  It may cause fire, heat generation, leakage or bursting.
- **Do not make the capacitor airtight by sealing it with adhesive agent or coating agent.**
  It may cause short-circuit because of generated and accumulated electrolyte gas.
- **Do not use new and used capacitors together. Do not use different types of capacitors together.**
  It may cause fire, heat generation, leakage or bursting.
- **If you connect two or more capacitors in series or parallel, please consult us in advance.**
  It may cause bursting or fire due to unbalanced load or voltage.
- **Keep capacitors away from direct sunlight, high temperature and humidity.**
  It may cause heat generation or performance deterioration.

For using SII Silver Oxide batteries, please follow the following precautions.

⚠WARNING!

- **Do not heat, disassemble nor dispose of in fire**
  Doing so damages the insulation materials and may cause fire, heat generation, leakage or bursting.
- **Do not short.**
  If the (+) and (-) come into contact with metal materials, shortcircuit occurs. As a result, fire, heat generation, leakage or bursting may occur.
- **Keep batteries out of children's reach.**
  It is dangerous that children swallow the battery.
  When you design mechanical hardware around the battery, please fix the battery firmly in order to prevent children from removing it.
  When you store the batteries, please keep the batteries out of children's reach.
  If a battery is swallowed, consult a physician immediately.
- **If leaked liquid, alkaline, get in the eyes, do not rub them, wash them with clean water and consult a physician immediately.**
- **If leaked liquid, alkaline, stick to clothing, for protecting from irritation, wash them with clean water immediately.**

⚠CAUTION!

- **Do not reverse placement of (+) and (-)**
- **Do not solder directly to the battery**
- **Do not use new and used batteries together. Do not use different types of batteries together.**
- **Do not charge.**
- **Do not use nor leave the batteries in direct sunlight nor in high-temperature areas.**
- **Keep batteries away from direct sunlight, high temperature and humidity.**
- **Avoid letting battery contact water.**
- **Make sure to insert batteries without having (+) and (-) come in contact with metal parts of equipment.**
- **Read the equipment instruction manual and precautions carefully before using. Some usage or types of equipment do not suit the specifications or performance of these batteries.**
- **Remove batteries from the equipment, if finished using. Do not leave batteries connecting with equipment after using.**
- **In case of disposal, insulate between (+) and (-) of battery by an insulating material.**

IMPORTANT

1. The information herein is subject to change without notice.
2. Neither reproduction, duplication nor unauthorized use of this catalog in whole or part is allowed without the prior written approval of Seiko Instruments Inc.
3. The colors of the products reproduced herein ("Products") may be different from the actual colors. Check colors on actual products before using the Products.
4. Circuits and respective application methods described herein are for reference only. Seiko Instruments Inc. shall not be liable for any damages or losses resulting from any claim by third parties that any Products or application methods described herein infringe any right intellectual property right. All intellectual property rights with respect to the Products belong exclusively to Seiko Instruments Inc. Seiko Instruments Inc. does not grant users of the Products any right or license to the Products hereunder.
5. When Products include Strategic Products (or Services) stipulated in the Foreign Exchange and Trade Control Law, they shall not be exported without permission of governmental authorities.
6. The Products are designed for consumer equipment and cannot be used as part of any device or equipment which influences the human body or requires a significantly high reliability, such as physical exercise equipment, medical equipment, disaster prevention equipment, gas related equipment, vehicles, aircraft and equipment mounted on vehicles without our prior express written consent.

All data, dimensions, characteristics and values shown in this catalogue are for reference only.
Please contact your local Seiko Instruments Representative for current detailed specifications.

Micro-Energy Division who manufactures the products described in this catalog holds the ISO 9001 quality management system certificate, and the ISO 14001 environmental management systems certificate.

www.sii-me.com

Seiko Instruments Inc.

Micro-Energy Division
1-8, Nakase, Mihamaku, Chiba-shi, Chiba 261-8507, Japan
Telephone:+81-43-211-1735 Facsimile:+81-43-211-8034

Asia

Seiko Instruments (H.K.) Ltd.
4-5/F, Wyler Centre 2, 200 Tai Lin Pai Rd.,
Kwai Chung, N.T., Kowloon, Hong Kong
Telephone: +852-2494-5111
Facsimile: +852-2480-5479
Email:sales@sih.com.hk
http://www.sih.com.hk

Seiko Instruments (H.K.) Ltd.
- Shenzhen Rep. Office
Room 2212-15, Office Tower, Shun Hing
Square Di Wang Commercial Centre,
5002 Shen Nan Dong Road, Shenzhen,
518008, China
Telephone: +86-755-8246-2680
Facsimile: +86-755-8246-5140

Seiko Instruments (Shanghai) Inc.
Room 2701-2703, 27th Floor,
Shanghai Plaza,
138 Mid Huaihai Rd.,
Shanghai 200021, China
Telephone: +86-21-6375-6611
Facsimile: +86-21-6375-6727

Seiko Instruments Korea Inc.
507, Korea City Air Terminal Bldg,
22, 87Gil, Teheran-ro, Gangnam-Gu,
Seoul, 06164 Korea
Telephone: +82-2-565-8006
Facsimile: +82-2-565-8306
http://www.sii.co.kr

Seiko Instruments Taiwan Inc.
12F, No.101, Sec.2, Nanking E. Rd.,
Taipei 104, Taiwan, R.O.C.
Telephone: +886-2-2563-5001
Facsimile: +886-2-2563-5580
Email:public@sii.co.jp
http://www.sii.com.tw

Europe

Seiko Instruments GmbH
Siemensstrasse 9
D-63263 Neu Isenburg, Germany
Telephone: +49-6102-297-0
Facsimile: +49-6102-297-50100
Email:info@seiko-instruments.de
http://www.seiko-instruments.de

North/Central/South America

Seiko Instruments U.S.A., Inc.
21221 S. Western Ave., Suite 250,
Torrance, CA 90501, U.S.A.
Telephone: +1-310-517-7802
Facsimile: +1-310-517-7792
Email:info@seikoinstruments.com
http://www.sii-me.com

Contact us

(Specifications are subject to change without notice.)

Released in December 2015

Printed with soy ink.

Copyright©2015 Seiko Instruments Inc. All Right Reserved.

No.BAC3015EJ-01C1512