# | CSW SERIES
PANEL MOUNT




## Features

- Ratings from 10A to 90A @ 24-280 VAC
- 3-32 VDC input range
- Low off-state leakage current (snubberless)
- SCR output for heavy industrial loads
- EMC Compliant for reliable operation in harsh environments
- Replaces the CSD and CSE Series relays
- Improved SEMS screw and washer
- Redesigned housing with anti-rotation barriers
- Direct bond copper substrate
- Direct power lead frame
- Epoxy free design

## PRODUCT SELECTION

| Control Voltage | 10A | 25A | 50A | 75A | 90A |
|---|---|---|---|---|---|
| 3-32 VDC | CSW2410 | CSW2425 | CSW2450 | CSW2475 | CSW2490 |

## ORDERING OPTIONS

CSW – 24 – 10 – K – P – G – S – H – -10

**Serires**

**CSW**

**Operating Voltage**

**24:** 24-280 VAC

**Rated Load Current**

**10:** 10 Amps **25:** 25 Amps **50:** 50 Amps
**75:** 75 Amps **90:** 90 Amps

**Termination**

**Blank:** Screw
**F:** Quick Connect (Up to 50 Amps. Single pair [up to 25 Amps] Double pair [up to 50 Amps]) (1)
**K:** Hex standoffs for PC Board mounting (2)

**Overvoltage Protection**

**Blank:** Not Included
**P:** Included (3)

**Input Status LED**

**Blank:** Not Included
**G:** Included

**Snubber**

**Blank:** Not Included
**S:** Included

**Thermal Pad**

**Blank:** Not Included
**H:** Included

**Switching Type**

**Blank:** Zero Voltage Turn-On
**-10:** Instantaneous Turn-On (4)

— Required for valid part number
☐ For options only and not required for valid part number

**Note:** Not all part number combinations are available. Contact Crydom Technical support for information on the availability of a specific part number.



Copyright © 2021 Sensata Technologies, Inc.

## OUTPUT SPECIFICATIONS (5)

| Description | 10 A | 25 A | 50 A | 75 A | 90 A |
|---|---|---|---|---|---|
| Operating Voltage (47-440Hz) [Vrms] (6) | 24-280 | 24-280 | 24-280 | 24-280 | 24-280 |
| Transient Overvoltage [Vpk] | 600 | 600 | 600 | 600 | 600 |
| Maximum Off-State Leakage Current @ Rated Voltage [mArms] (7) | 1.0 | 1.0 | 1.0 | 1.0 | 1.0 |
| Minimum Off-State dv/dt @ Maximum Rated Voltage [V/µsec] | 500 | 500 | 500 | 500 | 500 |
| Maximum Load Current [Arms] (8) | 10 | 25 | 50 | 75 | 90 |
| Minimum Load Current [mArms] | 150 | 150 | 150 | 150 | 150 |
| Maximum 1 Cycle Surge Current (50/60) [Apk] | 115/120 | 239/250 | 597/625 | 954/1000 | 1145/1200 |
| Maximum On-State Voltage Drop @ Rated Current [Vrms] | 1.15 | 1.15 | 1.15 | 1.15 | 1.15 |
| Thermal Resistance Junction to Case (Rjc) [°C/W] | 1.03 | 0.8 | 0.45 | 0.3 | 0.27 |
| Maximum $I^2t$ for Fusing 50/60Hz (1/2 cycle) [$A^2$ sec] | 66/60 | 285/259 | 1770/1621 | 4555/4150 | 6560/5976 |
| Minimum Power Factor (at Maximum Load) | 0.5 | 0.5 | 0.5 | 0.5 | 0.5 |

## INPUT SPECIFICATIONS (5)

| Description | Parameters |
|---|---|
| Control Voltage Range (9) | 3-32 VDC |
| Minimum Turn-On Voltage | 3 VDC |
| Must Turn-Off Voltage | 1.0 VDC |
| Maximum Reverse Voltage | -32 VDC |
| Typical Input Current | 10 mA @ 12 VDC |
| Nominal Input Impedance | Active Current Limiter |
| Maximum Turn-On Time [msec] (10) | 1/2 Cycle |
| Maximum Turn-Off Time [msec] | 1/2 Cycle |

## GENERAL SPECIFICATIONS (5)

| Description | Parameters |
|---|---|
| Dielectric Strength, Input/Output/Base (50/60Hz) | 4000 Vrms |
| Minimum Insulation Resistance (@ 500 VDC) | $10^9$ Ohm |
| Maximum Capacitance, Input/Output | 10 pF |
| Ambient Operating Temperature Range | -40 to 80 °C |
| Ambient Storage Temperature Range | -40 to 125 °C |
| Weight (typical) | 2.6 oz (74.9 g) |
| Housing Material | UL94 V-0 |
| Baseplate Material | Aluminum |
| Input Terminal Screw Torque Range (in-lb/Nm) | 13-15/1.5-1.7 |
| Load Terminal Screw Torque Range (in-lb/Nm) | 18-20/2.0-2.2 |
| SSR Mounting Screw Torque Range (in-lb/Nm) | 18-20/2.0-2.2 |
| Input/Load Terminal Screw Torque Range (in-lb/Nm) (2) | w/"K" option 8-10 / 0.9-1.13 |
| Input/Output Terminal Screw Thread Size | #6-32 UNC / #8-32 UNC |
| Humidity per IEC60068-2-78 | 93% non-condensing |
| LED Status Indicator (Color) | w/"G" option (green) |
| MTBF (Mean Time Between Failures) at 40°C ambient temperature (11) | 11,641,553 hours (1,328 years) |
| MTBF (Mean Time Between Failures) at 60°C ambient temperature (11) | 7,210,376 hours (823 years) |

## WIRING DIAGRAM

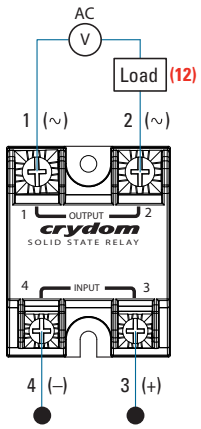


**Recommended Wire Sizes**

| Terminals | Wire Size (Solid / Stranded) | Wire Pull-Out Strength (lb)[N] |
|---|---|---|
| Input | 24 AWG (0.2 mm²) / 0.2 [minimum] | 10 [44.5] |
| | 2 x 12 AWG (3.3 mm²) / 3.3 [maximum] | 90 [400] |
| Output | 20 AWG (0.5 mm²) / 0.518 [minimum] | 30 [133] |
| | 2 x 10 AWG (5.3 mm²) / 5.3 | 110 [490] |
| | 2 x 8 AWG (8.4 mm²) / 8.4 [maximum] | 90 [400] |

**Input Current vs Input Voltage**
**Standard Regulated "DC" Input**

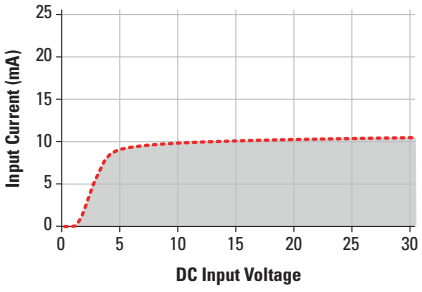




Copyright © 2021 Sensata Technologies, Inc.

## EQUIVALENT CIRCUIT BLOCK DIAGRAM

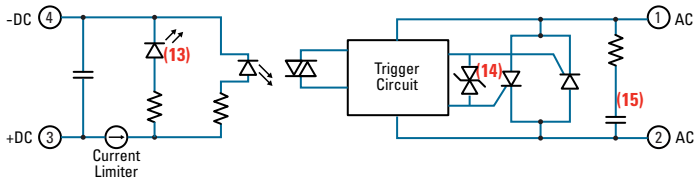


## MECHANICAL SPECIFICATIONS (5)

Tolerances: ±0.02 in / 0.5 mm
All dimensions are in: inches [millimeters]

### Screw Termination

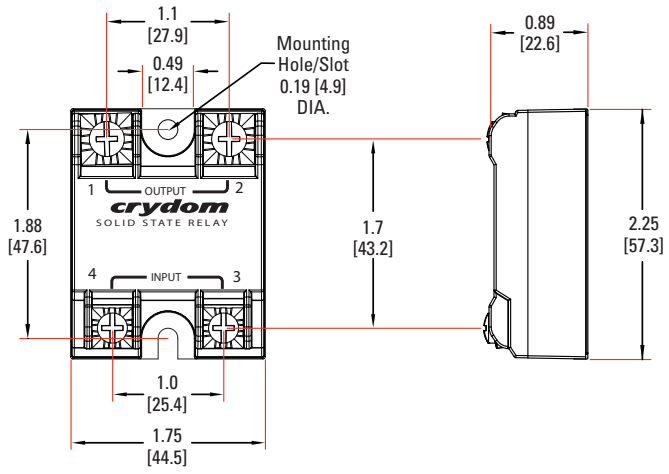


### Hex Standoff Termination ("K" Option) (2)

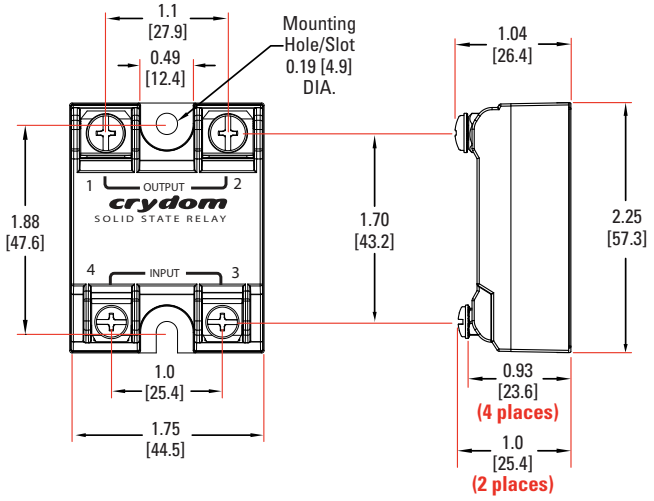


### Quick Connect Termination ("F" Option) - Up to 25 Amp (1)

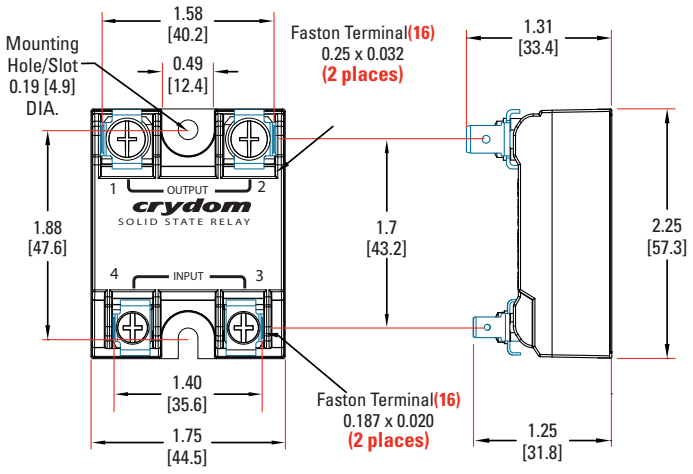


### Quick Connect Termination ("F" Option) - Up to 50 Amp (1)

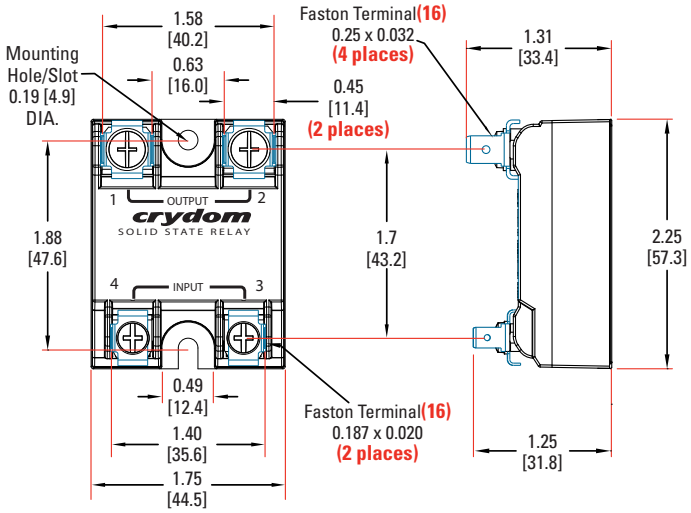




Copyright © 2021 Sensata Technologies, Inc.

## SURGE CURRENT INFORMATION

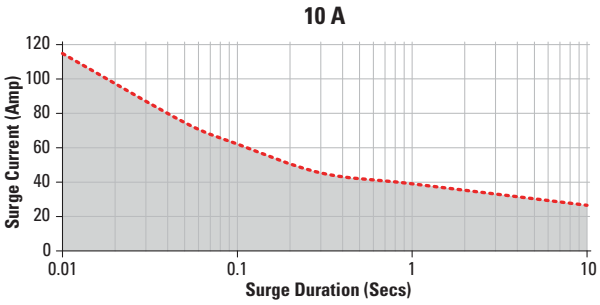


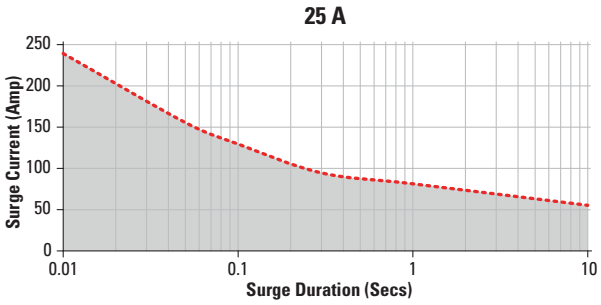


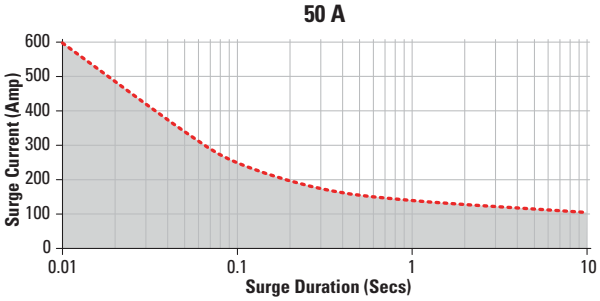


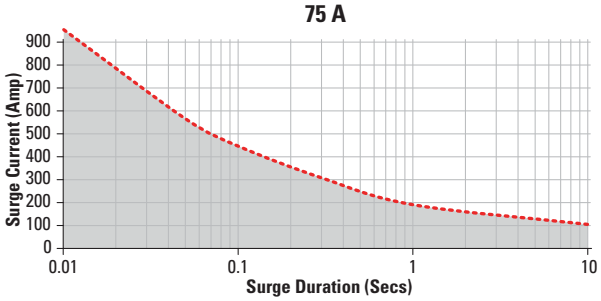


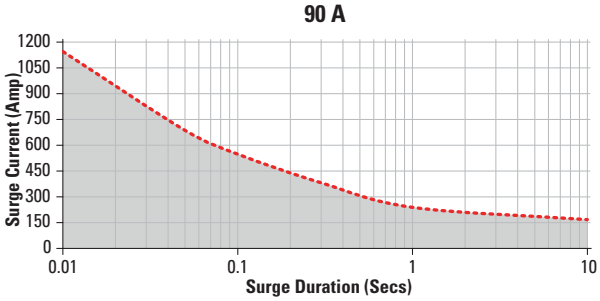


Non repetitive peak surge current at Tj initial 40°C.

## THERMAL DERATE INFORMATION

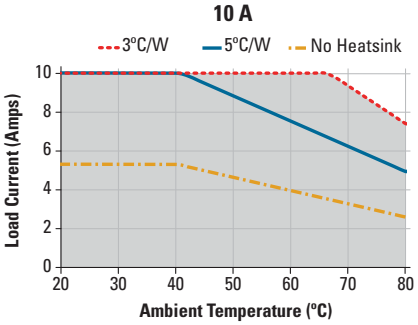


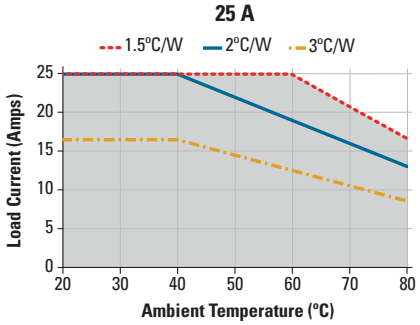


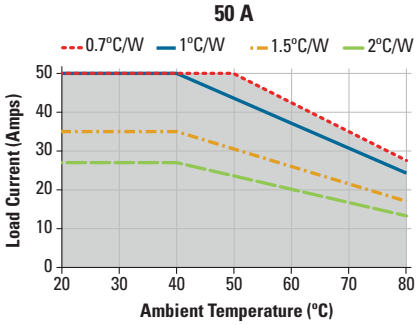


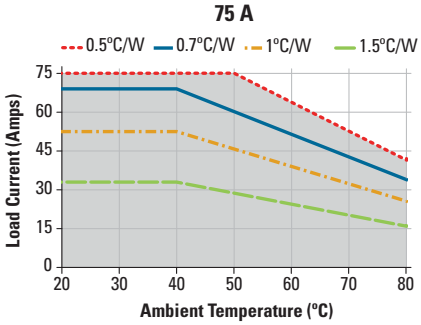


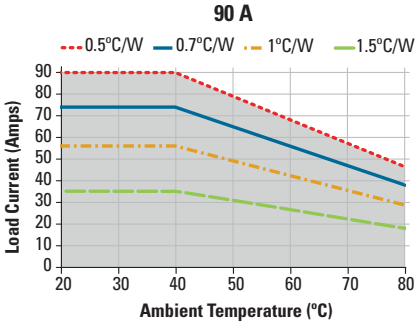




Copyright © 2021 Sensata Technologies, Inc.

## AGENCY APPROVALS AND CERTIFICATIONS

Designed in accordance with the requirements of IEC 62314
IEC 61000-4-2 : Electrostatic Discharge – Level 3
IEC 61000-4-4 : Electrically Fast Transients – Level 3
IEC 61000-4-5 : Electrical Surges – Level 3
IEC 600068-2-6: Vibration 0.33mm and 0.75mm Amplitude over 10-55 Hz
IEC 600068-2-27: Shock Resistance 15g/11ms

c UL us E116949 LR81689 CE RoHS

## ACCESORIES

### Protective Cover & Hardware Kits

**Protective Cover**
Part number: KS101

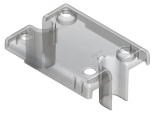

Clear plastic cover compatible with all new S1 designs. Safety covers provide added protection from electric shock when installing or checking equipment.

**Hardware Kit**
Part number: HK4



Bag with 2 square brass accessories and 2 screw 8-32 x 5/8 for output. Used to mount TMR1 lug terminals.

**Recommended Accessories**

| Cover | Hardware Kit | Heat Sink Part No. | Thermal Resistance [°C/W] | Lug Terminal | Thermal Pad |
|---|---|---|---|---|---|
| KS101 | HK1 | HS501DR | 3.0 | TRM1 | HSP-1 |
| | HK4 | HS301 / HS301DR | 2.5 | TRM6 | HSP-2 |
| | | HS251 | 2.0 | | |
| | | HS202 / HS202DR | 2.0 | | |
| | | HS201 / HS201DR | 1.7 | | |
| | | HS172 | 1.5 | | |
| | | HS151 / HS151DR | 1.2 | | |
| | | HS122 / HS122DR | 1.0 | | |
| | | HS103 / HS103DR | 1.0 | | |
| | | HS101 | 0.7 | | |
| | | HS073 | 0.7 | | |
| | | HS072 | 0.5 | | |
| | | HS053 | 0.36 | | |
| | | HS033 | 0.25 | | |
| | | HS023 | | | |

## GENERAL NOTES

(1) Single pair (up to 25 A) Double pair* (up to 50 A). ***Caution:** User must connect both pairs.
(2) Option "K" is designed and tested for use with printed circuit boards or ring/fork terminals having a thickness between 0.031 and 0.093 inches (0.79 to 2.36 mm), and loads rated up to 50 Amps. For higher load currents, the "K" standoff temperature must not exceed 105°C. For additional application assistance please contact Crydom Technical Support.
(3) Output will self trigger between 450-600Vpk, not suitable for capacitive loads.
(4) Instantaneous turn-on version is not recomended for capacitive loads. Use zero turn-on only.
(5) All parameters at 25°C unless otherwise specified.
(6) For "S" option, operating voltage frequency is 47-63Hz.
(7) For parts with option "S" maximum leakage current is 10mA.
(8) Heat sinking required, see derating curves.
(9) Increase minimum voltage by 1V for operations from -20 to -40°C.
(10) Turn-on time for instantaneous turn-on version ("-10" option) is 0.1ms.
(11) All parameters at 50% power rating and 100% duty cycle (contact Crydom tech support for detailed report).
(12) Load can be wired to either SSR output terminal 1 or 2.
(13) Elective Input Status LED, "G" option
(14) Elective Overvoltage Protection, "P" option.
(15) Elective Internal Snubber, "S" option.
(16) Mechanical dimensions vary from G3 models.

For additional information or specific questions, contact Crydom Technical Support.



Copyright © 2021 Sensata Technologies, Inc.

## WARNINGS




RISK OF MATERIAL DAMAGE AND HOT ENCLOSURE

- The product's side panels may be hot, allow the product to cool before touching.
- Follow proper mounting instructions including torque values.
- Do not allow liquids or foreign objects to enter this product.

**Failure to follow these instructions can result in serious injury, or equipment damage.**




HAZARD OF ELECTRIC SHOCK, EXPLOSION OR ARC FLASH

- Disconnect all power before installing or working with this equipment.
- Verify all connections and replace all covers before turning on power.

**Failure to follow these instructions will result in death or serious injury.**



Sensata Technologies, Inc. ("Sensata") data sheets are solely intended to assist designers ("Buyers") who are developing systems that incorporate Sensata products (also referred to herein as "components"). Buyer understands and agrees that Buyer remains responsible for using its independent analysis, evaluation and judgment in designing Buyer's systems and products. Sensata data sheets have been created using standard laboratory conditions and engineering practices. Sensata has not conducted any testing other than that specifically described in the published documentation for a particular data sheet. Sensata may make corrections, enhancements, improvements and other changes to its data sheets or components without notice.
Buyers are authorized to use Sensata data sheets with the Sensata component(s) identified in each particular data sheet. HOWEVER, NO OTHER LICENSE, EXPRESS OR IMPLIED, BY ESTOPPEL OR OTHERWISE TO ANY OTHER SENSATA INTELLECTUAL PROPERTY RIGHT, AND NO LICENSE TO ANY THIRD PARTY TECHNOLOGY OR INTELLECTUAL PROPERTY RIGHT, IS GRANTED HEREIN. SENSATA DATA SHEETS ARE PROVIDED "AS IS". SENSATA MAKES NO WARRANTIES OR REPRESENTATIONS WITH REGARD TO THE DATA SHEETS OR USE OF THE DATA SHEETS, EXPRESS, IMPLIED OR STATUTORY, INCLUDING ACCURACY OR COMPLETENESS. SENSATA DISCLAIMS ANY WARRANTY OF TITLE AND ANY IMPLIED WARRANTIES OF MERCHANTABILITY, FITNESS FOR A PARTICULAR PURPOSE, QUIET ENJOYMENT, QUIET POSSESSION, AND NON-INFRINGEMENT OF ANY THIRD PARTY INTELLECTUAL PROPERTY RIGHTS WITH REGARD TO SENSATA DATA SHEETS OR USE THEREOF.
All products are sold subject to Sensata's terms and conditions of sale supplied at www.sensata.com SENSATA ASSUMES NO LIABILITY FOR APPLICATIONS ASSISTANCE OR THE DESIGN OF BUYERS' PRODUCTS. BUYER ACKNOWLEDGES AND AGREES THAT IT IS SOLELY RESPONSIBLE FOR COMPLIANCE WITH ALL LEGAL, REGULATORY AND SAFETY-RELATED REQUIREMENTS CONCERNING ITS PRODUCTS, AND ANY USE OF SENSATA COMPONENTS IN ITS APPLICATIONS, NOTWITHSTANDING ANY APPLICATIONS-RELATED INFORMATION OR SUPPORT THAT MAY BE PROVIDED BY SENSATA.
Mailing Address: Sensata Technologies, Inc., 529 Pleasant Street, Attleboro, MA 02703, USA.

CONTACT US

**Americas**
+1 (877) 502 5500 – Option 2
sales.crydom@sensata.com
**Europe, Middle East & Africa**
+44 (1202) 416170
ssr-info.eu@sensata.com
**Asia Pacific**
sales.isasia@list.sensata.com
China +86 (21) 2306 1500
Japan +81 (45) 277 7117
Korea +82 (31) 601 2004
India +91 (80) 67920890
Rest of Asia +886 (2) 27602006 ext 2808

Copyright © 2021 Sensata Technologies, Inc.

Rev. 04/01/21 ECN 21039 FDE-07-01 Rev. B